© Innomotics 2024

INNOMOTICS

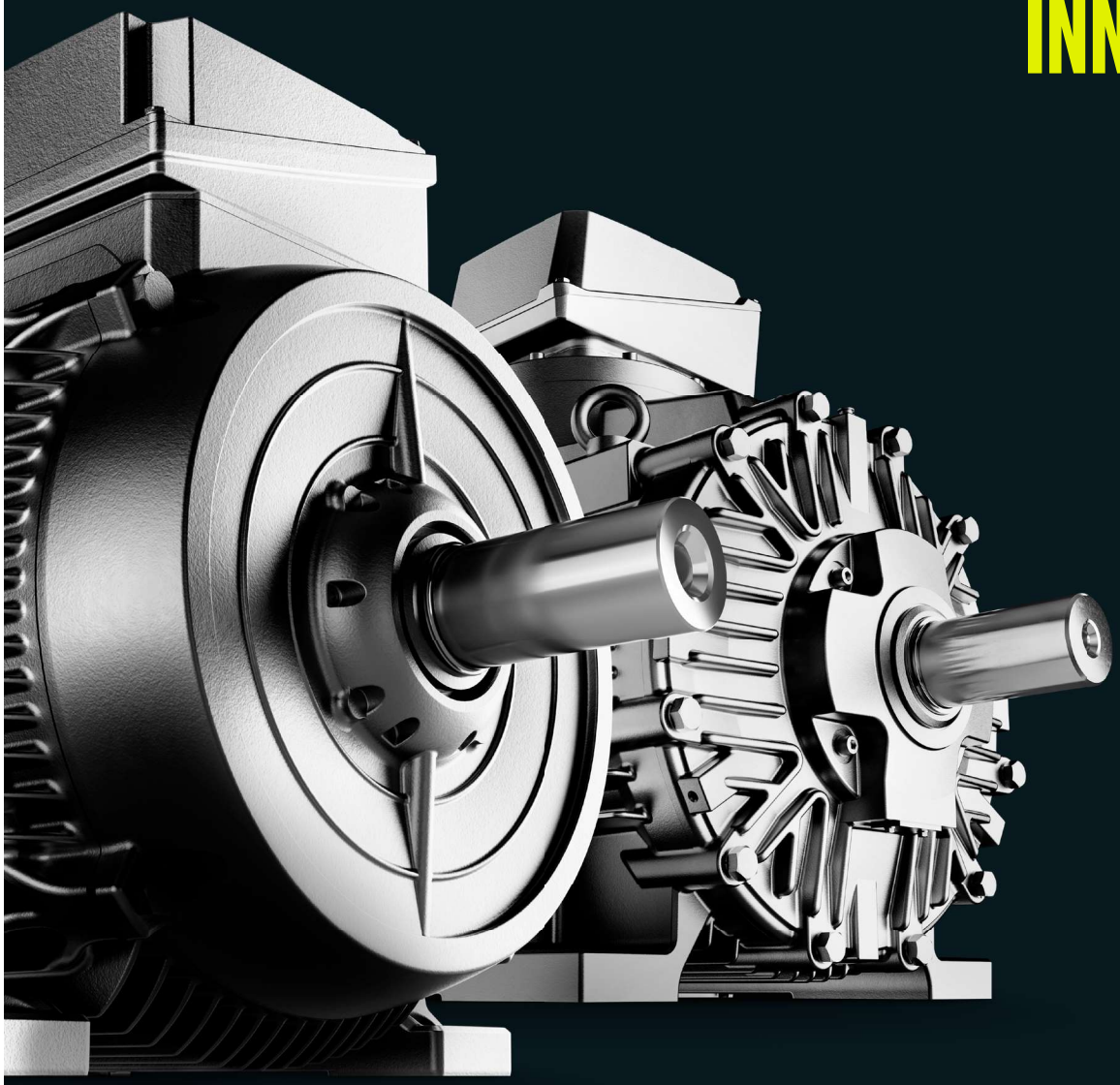

Catalog D 81.1 | Edition 10/2024

Innomotics Moves!

Low Voltage Motors GP, SD, XP, DP

Type series 1FP1, 1LE1, 1LE5, 1MB1, 1MB5 and 1PC1
Frame sizes 63 to 450 | **Power range** 0.09 to 1000 kW

innomotics.com/low-voltage-motors

© Innomotics 2024

© Innomotics 2024

Related catalogs

ME 81	**Application-specific motors Innomotics DP** 1PC14 Steel plant motors Roller table motors PDF (E86060-K5881-A101-A1-7600)
CR 81	**Innomotics Motors for Cranes** Innomotics DP – Crane duty motors Innomotics M – Main motors PDF (E86060-K1381-A101-A3-7600)

Innomotics Evaluate energy saving/energy efficiency tool

Further information on the subject of energy saving and the Innomotics Evaluate energy efficiency tool is available at the following address:
evaluate.innomotics.com/en

Siemens Product Configurator (SPC)

The Siemens Product Configurator (SPC) can be used on the Internet without requiring any installation. The Siemens Product Configurator (SPC) can be found in the Industry Mall at the following address:
configurator.innomotics.com

Copper surcharges

The metal factors that are applicable for the copper surcharges are specified in the headers of the current Price List D 81.1 P. Further information about "Metal surcharges" can be found in the appendix to this catalog.

© Innomotics 2024

Innomotics GP, SD, XP, DP Low-Voltage Motors

Type series 1FP1, 1LE1, 1LE5, 1MB1, 1MB5 and 1PC1

Introduction 1
Information regarding efficiency in accordance with International Efficiency,
Guide to selecting and ordering the motors,
General information, Electrical design, Mechanical version,
Mounting technology

Standard motors 2
SIMOTICS CONNECT 400
SIDRIVE IQ Fleet

Innomotics GP and Innomotics SD standard motors 3

Innomotics SD standard motors next generation 4

Innomotics VSD motors for converter operation 5

Innomotics XP explosion-protected motors 6

Innomotics DP application-specific motors 7
Marine motors

Appendix 8
Industry Services, Tools and engineering,
Index of order codes, Metal surcharges

Catalog D 81.1 | October 2024

Supersedes:
Catalog D 81.1 · April 2024

© Innomotics 2024

For current updates of this catalog, refer to innomotics.com

Please contact your local Innomotics branch

© Innomotics 2024

© Innomotics 2024

The Siemens Businesses **Large Drives Applications** and **Low Voltage Motors** have been transferred to **Innomotics**. The brand change from Siemens to Innomotics is ongoing.

Siemens' or Innomotics' legal information, trademarks or logos contained in product related documents **do not necessarily represent the actual branding** used for the products. Any technical product information remains valid **independently of the brand**.

Orders received as of **August 1, 2024**, will be confirmed exclusively with the product mark **"Innomotics"** regarding the concerned products and services.

Independent of the order date, all ordered products or services with **delivery** dates from **April 1, 2025**, will be delivered with the product mark **"Innomotics"**.

SIEMENS, SIMOTICS, SINAMICS, SIMOGEAR and SIMOTION are registered trademarks of Siemens AG or its affiliated companies whose use by third parties for their own purposes could violate the rights of the respective owner.

INNOMOTICS

© Innomotics 2024

Introduction

© Innomotics 2024

1

© Innomotics 2024

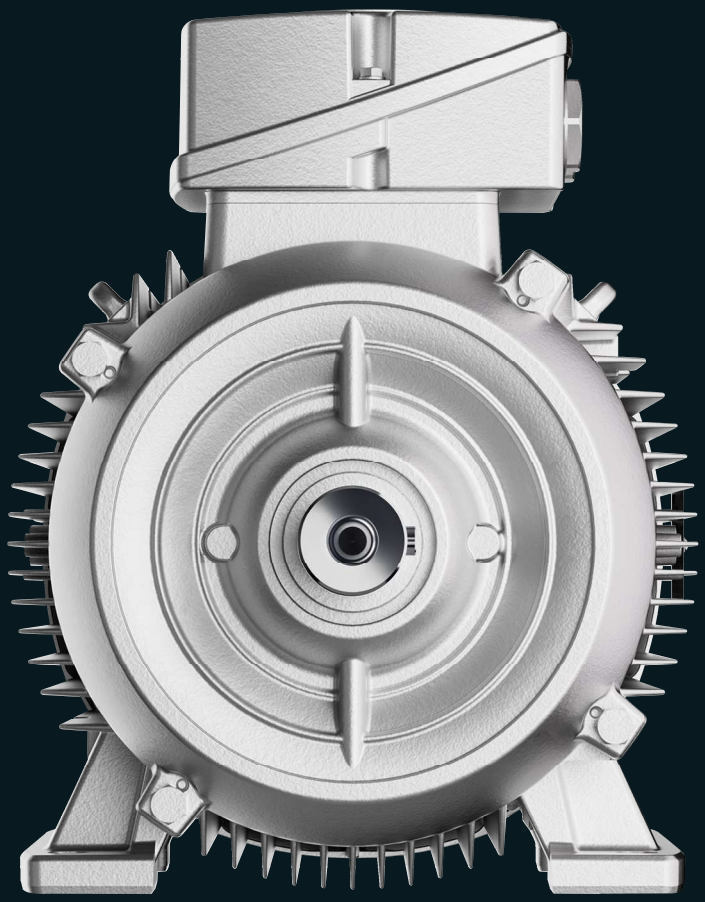

© Innomotics 2024

1 Introduction

1/2 Innomotics motors

1/2 Innovative drive technology for all industries, applications and power classes
1/4 Innomotics Digital Data App

1/5 Information regarding efficiency in accordance with International Efficiency

1/5 Efficiency classes and efficiencies according to IEC 60034-30-1

1/8 Guide to selecting and ordering the motors

1/8 Catalog orientation and drive selection

1/14 General information

1/14 Cut-away diagram of a low-voltage motor
1/15 Colors and paint finish
1/18 Packaging and dispatch
1/18 Safety notes and documentation
1/18 Test certificates
1/19 Extension of the liability for defects
1/20 Versions in accordance with standards and specifications
1/25 CHEMSTAR

1/27 Electrical design

1/27 Voltages, currents and frequencies
1/27 Powers
1/28 Rating plate and additional rating plates
1/30 Efficiency and power factor
1/30 Rated speed and direction of rotation, rated torque
1/31 Converter operation
1/33 Windings and insulation
1/36 Coolant temperature and installation altitude
1/37 Heating and ventilation
1/40 Motor protection
1/43 Connection, circuit and terminal boxes
1/55 Degrees of protection

1/56 Mechanical version

1/56 Types of construction
1/59 Flange dimensions
1/61 Shaft and rotor
1/63 Measures for gear mounting
1/64 Balance and vibration severity
1/65 Noise levels for line operation
1/66 Bearings and lubrication
1/92 T-Drain – adjustable drainage of condensed water
1/93 Lifting eyes and transport

1/94 Mounting technology

1/94 Preparation for mountings
1/95 Modular technology
1/95 _ Separately driven fan
1/96 _ Brakes
1/97 _ BFK458 spring-operated disk brake
1/101 _ KFB spring-operated brake
1/105 _ SFB-SH solenoid double-disk spring-operated brake
1/108 _ Configuration of motors with brakes
1/110 _ FDW/FDX spring-operated brake
1/117 Special technology
1/118 _ LL 861 900 220 rotary pulse encoder
1/119 _ HOG 9 DN 1024 I rotary pulse encoder
1/121 _ POG 9 rotary pulse encoder
1/122 _ POG 10 DN 1024 I rotary pulse encoder
1/123 _ HOG 10 D 1024 I rotary pulse encoder
1/124 _ Sendix 5020 rotary pulse encoder
1/125 _ Rotary pulse encoders for SIL2, SIL3 safety applications
1/125 _ Sendix 5834 FS2/FS3 rotary pulse encoder
1/126 _ HOGS 100 S rotary pulse encoder
1/126 _ FSI 862 rotary pulse encoder
1/127 _ XSI 850 rotary pulse encoder
1/127 _ XHI 861 rotary pulse encoder
1/128 _ Backstop, protective cover
1/129 Dimensions and weights of the mountings

© Innomotics 2024

Introduction

Innovative drive technology for all industries, applications and power classes

1

Overview

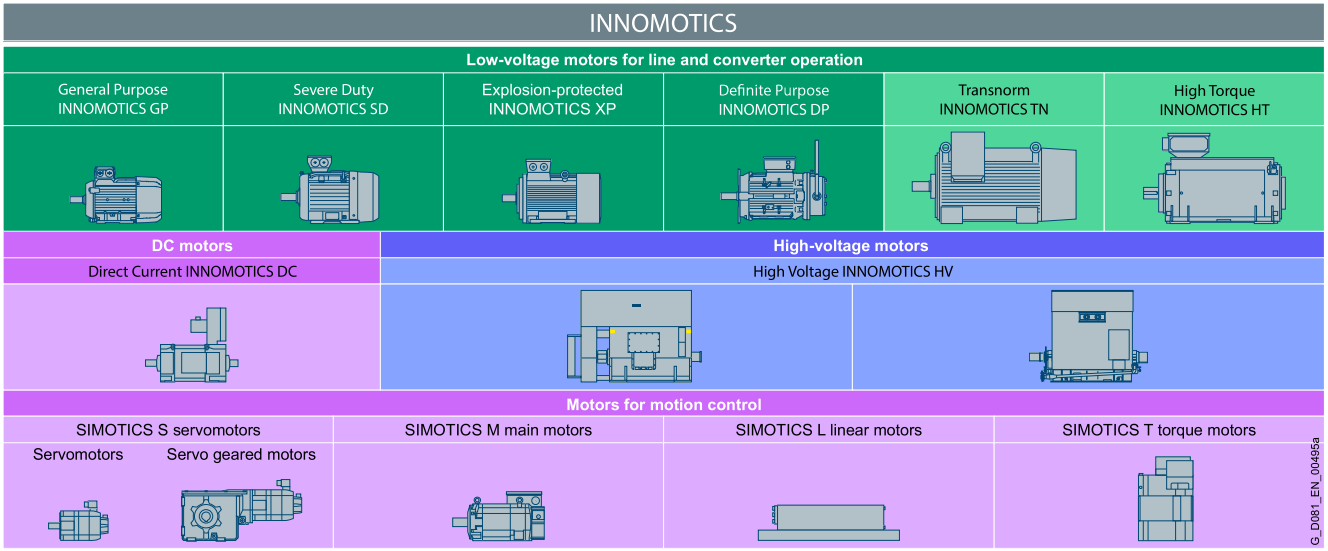

Innomotics motors

Innomotics has the most comprehensive portfolio of electric motors worldwide. From energy-efficient, low-voltage motors through servomotors with high dynamic performance up to well-proven DC motors and powerful high-voltage motors. Innovative drive technology for all industries, applications and power classes.

Outstanding performance, quality, efficiency, and compactness.

The Innomotics motor portfolio:

- Innomotics Low-Voltage Motors for line and converter operation:
  For standard applications with low to high motor power ratings
- Innomotics Motion Control motors:
  For highly dynamic and extremely precise applications in mechanical engineering
- Innomotics DC motors:
  For DC applications
- Innomotics High-Voltage Motors:
  For line and converter operation in standard applications with high to very high motor power ratings.

Innomotics Low-Voltage Motors for line and converter operation

Innomotics Low-Voltage Motors are the right choice for solving drive tasks efficiently and reliably. In contrast to Motion Control motors, which are additionally characterized by very high dynamic response and precision, the more favorably priced low-voltage motors are predestined for continuous or periodic, as well as powerful motions with fixed or variable speed, such as in pumps, fans, compressors, conveyor belts, lifts, hoisting and traversing gear, winders, mixers, kneaders and centrifuges.

Innomotics Low-Voltage Motors are characterized by very high reliability, ruggedness, and efficiency in operation.

They are available in diverse series and versions, which means that the appropriate motor can always be found for any application in an industrial or commercial environment, as well as in building management systems, shipbuilding and infrastructure.

Innomotics Low-Voltage Motors comply with the most important relevant standards and guidelines and are available in IEC, NEMA, and APAC versions. They can be used all over the world, and have a global, long-term spare parts service. For these reasons, they provide a sustainable basis for export-oriented, globally operating companies to enable them to conduct their international business efficiently.

© Innomotics 2024

Innovative drive technology for all industries, applications and power classes

Overview

Innomotics GP – General Purpose motors are the most economical solution for use under standard environmental conditions. Typically, these motors have an aluminum housing and are characterized by their low weight. Innomotics GP motors are available in the power range from 0.09 to 45 kW.

Available motor variants:

- Induction motors, optimized for line operation
  - in efficiency classes IE4, IE3, IE2, IE1
  - as a standards-compliant version or compact version with increased power (IE3, IE2, IE1)
  - as a 2-, 4-, 6-, 8-pole version
  - as pole-changing motors
  - as an APAC version for use in the ASEAN Pacific region (IE3, IE2)
  - as a NEMA version for use in the NAFTA area
    - electrically (mechanically acc. to IEC): Eagle Line
    - electrically and mechanically
  - can optionally be run on a converter
- Motors optimized for operation on frequency converters
  - as a Innomotics GP – VSD10 line induction motor
  - as a Innomotics GP – VSD4000 line synchronous reluctance motor for particularly efficient operation in conjunction with SINAMICS converters.
- Different types of construction, voltage versions, and a wide variety of options/add-ons for precise adaptation of the motors to application and customer-specific requirements.

Innomotics SD – Severe Duty motors have a rugged cast-iron housing, which means that they are also suitable for use in harsh to very harsh environments. With a wide power range from 0.09 to 1000 kW, Innomotics SD motors are the basis for machine and plant builders and owners who require a universal motor for flexible requirements and conditions of use.

Available motor variants:

- Induction motors, optimized for line operation
  - in efficiency classes IE4, IE3, IE2, IE1
  - standards-compliant version or compact version with increased power (IE3, IE2, IE1)
  - as a 2-, 4-, 6-, 8-pole version
  - as an APAC version for use in the ASEAN Pacific region (IE3, IE2)
  - as a NEMA version for use in the NAFTA area
    - electrically (mechanically acc. to IEC): Eagle Line
    - electrically and mechanically
  - can optionally be run on a converter
- Motors optimized for operation on frequency converters
  - as a Innomotics SD – VSD10 line induction motor
  - as a Innomotics SD – VSD4000 line synchronous reluctance motor for particularly efficient operation in conjunction with SINAMICS converters.
- Basic Line and particularly rugged Performance Line
- Different types of construction, voltage versions, and a very wide variety of options/add-ons for precise adaptation of the motors to application and customer-specific requirements.

Innomotics SD – next generation is the next innovation step in low-voltage motors.

In particular, these motors offer the following advantages for customers:

- More efficiency in the engineering process due to the Digital Twin Concept.
- Further increase in availability due to the Smart Motor Concept.

Innomotics XP – Explosion Proof motors are designed for use in hazardous environments. For all conditions of use and hazard zones, e.g. in explosive gas atmospheres of the chemical/petrochemical sector or in explosive dust atmospheres in the mining or food and beverage sectors, there are suitable motor versions in aluminum and cast iron that ensure maximum safety and satisfy the relevant standards and regulations.

Innomotics XP motors are available in the power range from 0.09 to 460 kW.

Available motor variants:

- Motors for use in Zones 1, 2, 21 and 22
- Induction motors optimized for line operation
  - in efficiency classes IE3, IE2, IE1
  - as a 2-, 4-, 6-, 8-pole version
  - as a NEMA version for use in the NAFTA area
- For motors suitable for line and converter operation
- Basic Line and particularly rugged Performance Line in a cast-iron housing
- Different types of construction, voltage versions, and a wide variety of options/add-ons for precise adaptation of the motors to application and customer-specific requirements.

Innomotics DP – Definite Purpose motors are low-voltage motors for application-specific, customized and industry-specific use.

They have the required respective industry-specific properties and certificates.

Innomotics DP motors:

- Crane motors for use in cranes (primarily for hoisting gear)
- Marine motors for use on ships
- Steel plant motors for use in the steel industry
- Roller table motors for roller table applications in the steel industry

Innomotics TN – Transnorm motors are low-voltage motors for line and converter operation in a cast-iron housing with higher power ratings up to 5000 kW from shaft height 315. In non-standard (Transnorm) motors, the assignment of the power rating and shaft extensions to frame size is not standardized.

Innomotics HT – High Torque motors are permanent-magnet synchronous motors and are used in applications that require extremely powerful drives without gear units, even at low speeds.

© Innomotics 2024

Introduction

Innomotics Digital Data App

Overview

The Innomotics Digital Data App provides access to technical data, spare part information, and operating instructions for Innomotics GP/SD motors any time any place. This gives our customers quick access to important contents of the digital twin. This simplifies our customers' processes.

By scanning the data matrix code on the additional rating plate of the motor, the relevant electrical and mechanical data can be displayed for this motor.

- Electronic and mechanical rating plate data
- Additional motor data
- Service information, e.g. display of the spare part list
- Display of the ordering options installed
- Documentation and manuals

The Innomotics Digital Data App is available for Apple and Android devices and can be installed from the respective stores. To do this, please scan the appropriate QR code.

Download on the App Store

Scan the QR code for the SIMOTICS Digital Data App.

GET IT ON Google Play

Scan the QR code for the SIMOTICS Digital Data App.

Benefits

- Shorter commissioning and service times
- Fast access to relevant service information
- Online availability of the motor data for integration into ERP systems

© Innomotics 2024

Overview

Harmonization of the efficiency classes

Various energy efficiency standards exist worldwide for induction motors. To promote global standardization, the international standard IEC 60034-30-1:2014 (Rotating electrical machines – Part 30-1: Efficiency classes of single-speed, three-phase, cage-induction motors (IE code) were defined and are used as the basis for local standards in most countries. Only the NAFTA countries USA, Canada, and Mexico[1)] use the differing standards of NEMA MG1. Standard IEC 60034-30-1:2014 divides low-voltage induction motors into efficiency classes IE1 to IE4.

Applicability (excerpt)

_ Low-voltage motors up to 1000 V (50/60 Hz in line operation)

_ Power rating: 0.12 to 1000 kW; with 2, 4, 6, or 8 poles

_ Operating mode: S1

The efficiencies in IEC 60034-30-1 are based on the method for determining losses according to IEC 60034-2-1:2014.

IE efficiency classes

The efficiency classes are grouped according to the following nomenclature (IE = International Efficiency):

_ IE1 (Standard Efficiency)

_ IE2 (High Efficiency)

_ IE3 (Premium Efficiency)

_ IE4 (Super Premium Efficiency)

IEC 60034-30-1 EU and other countries	**NEMA MG1 NAFTA (USA, Canada, Mexico[1)])**	**GB 18613-2020 China**
IE4		**Grade 2 (IE4)**
IE3	**Premium Efficient (60 Hz)**	**Grade 3 (IE3)**
IE2	**Energy Efficient (60 Hz)**	

Comparison of IE efficiency classes

Note:
All efficiency classes are stated with reference to 50 Hz data (unless specified otherwise).

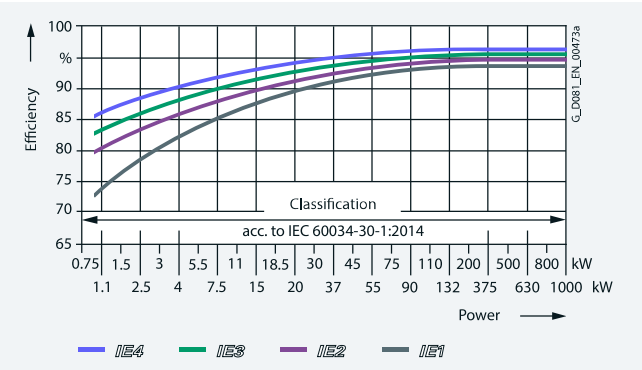

IE1-IE4 efficiencies, 4-pole, 50 Hz, depending on the power

Minimum Energy Performance Standard (MEPS)

see: https://meps.innomotics.com

Minimum efficiencies according to IEC 60034-30-1:2014

Rated power	Efficiency η in % IEC IE class							
$P_{rated, 50 Hz}$	**IE1** – Standard Efficiency				**IE2** – High Efficiency			
kW	2-pole	4-pole	6-pole	8-pole	2-pole	4-pole	6-pole	8-pole
0.18	52.8	57.0	45.5	38.0	60.4	64.7	56.6	45.9
0.20	54.6	58.5	47.6	39.7	61.9	65.9	58.2	47.4
0.25	58.2	61.5	52.1	43.4	64.8	68.5	61.6	50.6
0.37	63.9	66.0	59.7	49.7	69.5	72.7	67.6	56.1
0.40	64.9	66.8	61.1	50.9	70.4	73.5	68.8	57.2
0.55	69.0	70.0	65.8	56.1	74.1	77.1	73.1	61.7
0.75	72.1	72.1	70.0	61.2	77.4	79.6	75.9	66.2
1.1	75.0	75.0	72.9	66.5	79.6	81.4	78.1	70.8
1.5	77.2	77.2	75.2	70.2	81.3	82.8	79.8	74.1
2.2	79.7	79.7	77.7	74.2	83.2	84.3	81.8	77.6
3	81.5	81.5	79.7	77.0	84.6	85.5	83.3	80.0
4	83.1	83.1	81.4	79.2	85.8	86.6	84.6	81.9
5.5	84.7	84.7	83.1	81.4	87.0	87.7	86.0	83.8
7.5	86.0	86.0	84.7	83.1	88.1	88.7	87.2	85.3
11	87.6	87.6	86.4	85.0	89.4	89.8	88.7	86.9
15	88.7	88.7	87.7	86.2	90.3	90.6	89.7	88.0
18.5	89.3	89.3	88.6	86.9	90.9	91.2	90.4	88.6
22	89.9	89.9	89.2	87.4	91.3	91.6	90.9	89.1
30	90.7	90.7	90.2	88.3	92.0	92.3	91.7	89.8
37	91.2	91.2	90.8	88.8	92.5	92.7	92.2	90.3
45	91.7	91.7	91.4	89.2	92.9	93.1	92.7	90.7
55	92.1	92.1	91.9	89.7	93.2	93.5	93.1	91.0
75	92.7	92.7	92.6	90.3	93.8	94.0	93.7	91.6
90	93.0	93.0	92.9	90.7	94.1	94.2	94.0	91.9
110	93.3	93.3	93.3	91.1	94.3	94.5	94.3	92.3
132	93.5	93.5	93.5	91.5	94.6	94.7	94.6	92.6
160	93.8	93.8	93.8	91.9	94.8	94.9	94.8	93.0
200 ... 1000	94.0	94.0	94.0	92.5	95.0	95.1	95.0	93.5

Rated power	Efficiency η in % IEC IE class							
$P_{rated, 50 Hz}$	**IE3** – Premium Efficiency				**IE4** – Super Premium Efficiency			
kW	2-pole	4-pole	6-pole	8-pole	2-pole	4-pole	6-pole	8-pole
0.18	65.9	69.9	63.9	58.7	70.8	74.7	70.1	67.2
0.20	67.2	71.1	65.4	60.6	71.9	75.8	71.4	68.4
0.25	69.7	73.5	68.6	64.1	74.3	77.9	74.1	70.8
0.37	73.8	77.3	73.5	69.3	78.1	81.1	78.0	74.3
0.40	74.6	78.0	74.4	70.1	78.9	81.7	78.7	74.9
0.55	77.8	80.8	77.2	73.0	81.5	83.9	80.9	77.0
0.75	80.7	82.5	78.9	75.0	83.5	85.7	82.7	78.4
1.1	82.7	84.1	81.0	77.7	85.2	87.2	84.5	80.8
1.5	84.2	85.3	82.5	79.7	86.5	88.2	85.9	82.6
2.2	85.9	86.7	84.3	81.9	88.0	89.5	87.4	84.5
3	87.1	87.7	85.6	83.5	89.1	90.4	88.6	85.9
4	88.1	88.6	86.8	84.8	90.0	91.1	89.5	87.1
5.5	89.2	89.6	88.0	86.2	90.9	91.9	90.5	88.3
7.5	90.1	90.4	89.1	87.3	91.7	92.6	91.3	89.3
11	91.2	91.4	90.3	88.6	92.6	93.3	92.3	90.4
15	91.9	92.1	91.2	89.6	93.3	93.9	92.9	91.2
18.5	92.4	92.6	91.7	90.1	93.7	94.2	93.4	91.7
22	92.7	93.0	92.2	90.6	94.0	94.5	93.7	92.1
30	93.3	93.6	92.9	91.3	94.5	94.9	94.2	92.7
37	93.7	93.9	93.3	91.8	94.8	95.2	94.5	93.1
45	94.0	94.2	93.7	92.2	95.0	95.4	94.8	93.4
55	94.3	94.6	94.1	92.5	95.3	95.7	95.1	93.7
75	94.7	95.0	94.6	93.1	95.6	96.0	95.4	94.2
90	95.0	95.2	94.9	93.4	95.8	96.1	95.6	94.4
110	95.2	95.4	95.1	93.7	96.0	96.3	95.8	94.7
132	95.4	95.6	95.4	94.0	96.2	96.4	96.0	94.9
160	95.6	95.8	95.6	94.3	96.3	96.6	96.2	95.1
200	95.8	96.0	95.8	94.6	96.5	96.7	96.3	95.4
250	95.8	96.0	95.8	94.6	96.5	96.7	96.5	95.4
315 ... 1000	95.8	96.0	95.8	94.6	96.5	96.7	96.6	95.4

1) Additionaly required NOM certification.

© Innomotics 2024

Introduction

Efficiency classes and efficiencies according to IEC 60034-30-1

Overview

Background information

Comprehensive laws have been introduced in the European Union with the objective of reducing energy consumption and therefore CO_2 emissions. EU Regulations 640/209 and 2019/1781 concern the energy consumption or efficiency of induction motors in the industrial environment. This regulation is in force in every country of the European Economic Area until June 30, 2021. Effective July 1, 2021, the new regulation (EU) 2019/1781 will come into force. The main contents of and exceptions to both regulations are explained below.

Motor exclusively for use in transportation equipment for passenger and freight transportation corresponding to EVPG §1

To ensure that a "marine" motor (with "marine" option Exx and really use in a ship) will be considered as an exception from EU regulation it's necessary to add order code **D23** (Motor exclusively for use in transportation equipment for passenger and freight transportation corresponding to EVPG §1 dated February 27, 2008).

Train motors (with order code L91 and L92) are totally designed for use only in a rail vehicle, and therefore order code D23 is not needed.

For more information on internationally applicable standards and legal requirements, visit:
www.meps.innomotics.com

Regulation (EC) 640/2009

Exceptions

- Motors that are designed to be operated totally submerged in a liquid;
- Motors fully integrated into a product (e.g. a gear unit, pump, fan or compressor) whose energy efficiency cannot be measured independently of the product;
- Motors that are specially designed for operation under the following conditions:
  - At altitudes greater than 4000 meters above sea level;
  - At ambient temperatures above 60 °C;
  - At maximum operating temperatures above 400 °C;
  - At ambient temperatures below –30 °C
  - With cooling liquid temperatures at the product intake of below 0 °C or above 32 °C;
  - In hazardous areas in the context of Directive 2014/34/EU of the European Parliament and Council;
- Brake motors

The following motors are not affected:

- Pole-changing motors
- Synchronous motors
- Motors for intermittent duty S2 to S9
- Single-phase motors
- Motors specially developed for converter operation in accordance with IEC 60034-25

The following changes came into effect on the dates below:

From January 1, 2015:
Compliance with the legally required minimum efficiency class IE3 for a power range from 7.5 to 375 kW (2-, 4-, 6-pole) or, as an alternative, IE2 motor plus frequency converter.

From January 1, 2017:
Compliance with the legally required minimum efficiency class IE3 for a power range from 0.75 to 375 kW (2-, 4-, 6-pole) or, as an alternative, IE2 motor plus frequency converter.

From July 1, 2021:
Compliance with the legally required minimum efficiency class IE2 for a power range from 0.12 to 0.75 kW (2-, 4-, 6-, and 8-pole), exception: Ex eb motors

Compliance with the legally required minimum efficiency class IE3 for a power range from 0.75 to 1000 kW (2-, 4-, 6- and 8-pole), exception: Ex eb motors

From July 1, 2023:
Compliance with the legally required minimum efficiency class IE2 for a power range from 0.12 to 1000 kW (2-, 4-, 6- and 8-pole) of Ex eb motors with increased safety and of single-phase motors with a rated output power of at least 0.12 kW.

Compliance with the legally required minimum efficiency class IE4 for a power range of 75 kW to 200 kW (2-, 4-, 6-pole). Exception: Motors with a brake, Ex eb motors with increased safety or other explosion-protected motors.

Changes according to EU motor regulation 640/2009 Motor series Innomotics VSD10 (1LE1092/1LE1592) and VSD4000 (1FP10/1FP15) are the preferred motor types for converter operation.

© Innomotics 2024

Overview

New regulation (EU) 2019/1781

Exceptions

- Motors that are designed to be operated totally submerged in a liquid
- Motors fully integrated into a product (e.g. a gear unit, pump, fan or compressor) whose energy efficiency cannot be measured independently of the product
- Motors that are specially designed for operation under the following conditions:
  - At altitudes greater than 4000 meters above sea level
  - Where ambient temperatures exceed 60 °C
  - At maximum operating temperatures above 400 °C
  - At ambient temperatures below -30 °C
  - With cooling liquid temperatures at the product intake of below 0 °C or above 32 °C
  - In hazardous areas as defined in Directive 2014/34/EU of the European Parliament and Council that are designed and certified for underground mining applications
  - Motors with an integrated brake that is an integral part of the interior motor structure and can neither be removed or powered from a separate source during motor efficiency testing.
  - Motors with an integrated speed control (compact drives), whose energy efficiency cannot be tested independently of the speed control

The following motors are not affected:

- Pole-changing motors
- Synchronous motors
- Totally enclosed, naturally ventilated motors (TENV motors);
- Motors specially developed for converter operation in accordance with IEC 60034-25

Other potential restrictions as described in the technical documentation may apply to converter operation and must be taken into account!

The following are generally recommended for converter operation:

- Motor temperature detection by embedded temperature sensor
- Bearing insulation with frame size 225 and larger

Note:
Different minimum efficiency class requirements apply in China, Korea, and Australia. Other countries will be available soon.

Motors for the North American market

The Energy Policy Act (EPAct) was superseded in December 2010 by the Energy Independence Security Act (EISA).
The following motors must fulfill the NEMA Premium Efficient Level:

- 1 hp (0.75 kW) ... 500 hp (373 kW): 2-, 4-pole
  1 hp (0.75 kW) ... 350 hp (261 kW): 6-pole
  1 hp (0.75 kW) ... 250 hp (186 kW): 8-pole
- 2-, 4-, 6- and 8-pole
- ≤ 600 V
- NEMA Design A, B, or C. IEC Design N or H

For details, see NEMA MG1, Table 12-11 and Table 12-12.

Abbreviations

NEMA: National Electrical Manufacturers Association
IEC: International Electrotechnical Commission
EEA: European Economic Area

© Innomotics 2024

Introduction

Catalog orientation and drive selection

Overview

Steps for drive selection

Step 1	Orientation and general technical information		
Technical requirements for the motor	Rated frequency and rated voltage	3 AC 50/60 Hz, 400, 500 or 690 V	
	Operating mode	Standard duty (continuous duty S1 according to EN 60034-1)	
	Degree of protection or type of explosion protection required	IP..	
	Rated speed (No. of poles)	n = ... rpm	
	Rated power	P = ... kW	
	Rated torque	$T = P \cdot 9550/n$ = ... Nm	
	Type of construction	IM..	
Step 2	**Preselection in accordance with the application**		
Determination of the installation conditions and definition of the application, if necessary	Ambient temperature	≤ 40 °C	> 40 °C
	Installation altitude	≤ 1000 m	> 1000 m
	Factors for derating	None	Determine the factor for derating (for reduction factor, see "Coolant temperature and installation altitude" on page 1/36)
Cross-reference to other motors	These include motors for special requirements in the area of explosion protection and applications or motors according to the NEMA standard.		
Step 3	**Preliminary selection of the motor**		
Determination of the range of possible motors	Select the frame size and therefore the possible motors on the basis of the following parameters: efficiency class, cooling method, degree of protection, rated power, rated speed and rated torque range. Note: The standard temperature range of the motors is from -20 to +40 °C.		

Layout of the selection and ordering tables and description of the columns of the table headers

Power, frame size, temperature class				Operating values at rated power														Article No., add. data		
Table header – Meaning																				
P_{rated}, 50 Hz	P_{rated}, 60 Hz	P_{rated}, 60 Hz	Frame size	n_{rated}, 50 Hz	T_{rated}, 50 Hz	Different IE class	CC No. CC032A	η_{rated}, 50 Hz, 4/4	η_{rated}, 50 Hz, 3/4	η_{rated}, 50 Hz, 2/4	$\cos\varphi_{rated}$, 50 Hz, 4/4	I_{rated}, 50 Hz, 400 V	T_{LR}/T_{rated}	I_{LR}/I_{rated}	T_B/T_{rated}	L_{pfA}, 50 Hz	L_{WA}, 50 Hz	Article No.	m IM B3	J
kW	**kW**	**hp**	FS	rpm	Nm			%	%	%		A				dB (A)	dB (A)		kg	kgm^2
Rated power at 50 Hz	Rated power at 60 Hz	Rated power at 60 Hz	Frame size	Rated speed at 50 Hz	Rated torque at 50 Hz	Efficiency class according to IEC 60034-30-1	CC No. CC032A	Efficiency at 50 Hz, 4/4-load	Efficiency at 50 Hz, 3/4-load	Efficiency at 50 Hz, 2/4-load	Power factor at 50 Hz, 4/4-load	Rated current at 400 V, 50 Hz	Locked-rotor torque on direct switch-on as a multiple of the rated torque	Locked-rotor current on direct switch-on as a multiple of the rated current	Breakdown torque on direct switch-on as a multiple of the rated torque	Measuring-surface sound pressure level at 50 Hz	Sound power level at 50 Hz	Article number	Weight for type of construction IM B3, approx.	Moment of inertia

Legend:

Primary key

Standard values for all motors

Specially for NEMA Energy Efficient MG1 motors, Table 12-11 or NEMA Premium Efficient MG1 motors, Table 12-12

Note on pole-changing motors:
The operating values are specified here for the rated power for the two different pole numbers.

Step 4	Detailed selection of the motor in the selection and ordering data tables
Determination of the basic Article No. of the motor	Determine the motor Article No. according to the following parameters: rated power, rated speed, rated torque and rated current from the "Selection and ordering data" for the motors that have already been identified as possibilities.
Step 5	**Selection of the special versions or options**
Completing the motor Article No.	Determine special versions and the associated order codes (e.g. special voltages and types of construction, motor protection and degrees of protection, windings and insulation, colors and paint finish, mountings and mounting technology, etc.).
Step 6	**Additional information for motor selection**
Checking the required dimensions	The dimensions are specified in each catalog section under the heading of "Dimensions".
Selection of the frequency converter, if required	Article No. of the converter as well as its selection, see Catalogs D 11, D 18.1, D 21.3, D 31.1, D 31.2 and D 31.5.

© Innomotics 2024

Overview

Steps for drive selection in the catalog

Step 1	Step 2	Step 3	Step 4	Step 5	Step 6	Catalog section/page
Introduction						1
Innomotics CONNECT 400 / SIDRIVE IQ Fleet						2
	Innomotics GP and Innomotics SD standard motors					3
		Orientation				3/2
			IE4 Super Premium Efficiency			3/2
			_ Aluminum series Innomotics GP 1LE1004 – self-ventilated or forced-air cooled			3/9
			_ Cast-iron series Innomotics SD 1LE1504 Basic Line – self-ventilated or forced-air cooled			3/10
			_ Cast-iron series Innomotics SD 1LE1604 Performance Line – self-ventilated or forced-air cooled			3/12
			IE3 Premium Efficiency			3/14
			_ Aluminum series Innomotics GP 1LE1003 – self-ventilated			3/14
			_ Aluminum series Innomotics GP 1LE1003 with increased power – self-ventilated			3/18
			_ Aluminum series Innomotics GP 1LE1083 – self-ventilated			3/19
			_ Cast-iron series Innomotics SD 1LE1503 Basic Line – self-ventilated or forced-air cooled			3/20
			_ Cast-iron series Innomotics SD 1LE1603 Performance Line – self-ventilated or forced-air cooled			3/24
			_ Cast-iron series Innomotics SD 1LE1503 Basic Line with increased power – self-ventilated			3/28
			_ Cast-iron series Innomotics SD 1LE1603 Performance Line with increased power – self-ventilated			3/30
			_ Cast-iron series Innomotics SD 1LE1583 – self-ventilated			3/31
			IE2 High Efficiency			3/34
			_ Aluminum series Innomotics GP 1LE1001 – self-ventilated or forced-air cooled			3/34
			_ Aluminum series Innomotics GP 1LE1001 with increased power – self-ventilated			3/38
			_ Cast-iron series Innomotics SD 1LE1501 Basic Line – self-ventilated or forced-air cooled			3/40
			_ Cast-iron series Innomotics SD 1LE1601 Performance Line – self-ventilated or forced-air cooled			3/44
			_ Cast-iron series Innomotics SD 1LE1501 Basic Line with increased power – self-ventilated			3/48
			_ Cast-iron series Innomotics SD 1LE1601 Performance Line with increased power – self-ventilated			3/50
			IE1 Standard Efficiency			3/52
			_ Aluminum series Innomotics GP 1LE1002 – self-ventilated or forced-air cooled			3/52
			_ Aluminum series Innomotics GP 1LE1002 with increased power – self-ventilated			3/52
			_ Cast-iron series Innomotics SD 1LE1502 Basic Line – self-ventilated or forced-air cooled			3/56
			_ Cast-iron series Innomotics SD 1LE1502 Basic Line with increased power – self-ventilated or forced-air cooled			3/60
			APAC Line · IE3 Premium Efficiency			3/62
			_ Aluminum series Innomotics GP 1LE1043 – self-ventilated or forced-air cooled			3/62
			_ Aluminum series Innomotics GP 1LE1043 with increased power – self-ventilated or forced-air cooled			3/65
			_ Cast-iron series Innomotics SD 1LE1543 Basic Line – self-ventilated or forced-air cooled			3/66
			_ Cast-iron series Innomotics SD 1LE1643 Performance Line – self-ventilated or forced-air cooled			3/69
			_ Cast-iron series Innomotics SD 1LE1543 Basic Line with increased power – self-ventilated			3/72
			_ Cast-iron series Innomotics SD 1LE1643 Performance Line with increased power – self-ventilated			3/74
			APAC Line · IE2 High Efficiency			3/75
			_ Aluminum series Innomotics GP 1LE1041 – self-ventilated or forced-air cooled			3/75
			_ Aluminum series Innomotics GP 1LE1041 with increased power – self-ventilated or forced-air cooled			3/77
			_ Cast-iron series Innomotics SD 1LE1541 Basic Line – self-ventilated or forced-air cooled			3/78
			_ Cast-iron series Innomotics SD 1LE1541 Basic Line with increased power – self-ventilated or forced-air cooled			3/80
			ABNT Line · IR3 Rendimento Premium			3/81
			_ Aluminum series Innomotics GP 1LE1073 – self-ventilated or forced-air cooled			3/81
			_ Cast-iron series Innomotics SD 1LE1573, 1LE5773 – self-ventilated or forced-air cooled			3/83
			Eagle Line · NEMA Premium Efficient MG1 Table 12-12			3/85
			_ Aluminum series Innomotics GP 1LE1023 – self-ventilated or forced-air cooled			3/85
			_ Cast-iron series Innomotics SD 1LE1523 Basic Line – self-ventilated or forced-air cooled			3/88
			_ Cast-iron series Innomotics SD 1LE1623 Performance Line – self-ventilated or forced-air cooled			3/92
			Eagle Line · NEMA Energy Efficient MG1 Table 12-11			3/96
			_ Aluminum series Innomotics GP 1LE1021 – self-ventilated or forced-air cooled			3/96
			_ Cast-iron series Innomotics SD 1LE1521 Basic Line – self-ventilated or forced-air cooled			3/97
			Pole-changing			3/98
			_ Aluminum series Innomotics GP 1LE1011 for constant load torque – self-ventilated			3/98
			_ Aluminum series Innomotics GP 1LE1011/1LE1012 for square-law load torque – self-ventilated			3/99
				Article No. supplements and special versions		3/101
					Dimensions	3/148
	Innomotics SD standard motors next generation					4
		Orientation				4/2
			IE4 Super Premium Efficiency			4/12
			_ Cast-iron series Innomotics SD 1LE5504 Basic Line – self-ventilated or forced-air cooled			4/12
			_ Cast-iron series Innomotics SD 1LE5504 Basic Line with increased power – self-ventilated or forced-air cooled			4/14
			_ Cast-iron series Innomotics SD 1LE5604 Performance Line – self-ventilated or forced-air cooled			4/15
			_ Cast-iron series Innomotics SD Add 1LE5534 Basic Line – self-ventilated or forced-air cooled			4/16
			_ Cast-iron series Innomotics SD Add 1LE5634 Performance Line – self-ventilated or forced-air cooled			4/18
			IE3 Premium Efficiency			4/20
			_ Cast-iron series Innomotics SD 1LE5503 Basic Line – self-ventilated or forced-air cooled			4/20
			_ Cast-iron series Innomotics SD 1LE5603 Performance Line – self-ventilated or forced-air cooled			4/21
			_ Cast-iron series Innomotics SD Add 1LE5533 Basic Line – self-ventilated or forced-air cooled			4/22
			_ Cast-iron series Innomotics SD Add 1LE5633 Performance Line – self-ventilated or forced-air cooled			4/24
			_ Cast-iron series Innomotics SD Pro 1LE5583 Basic Line – self-ventilated or forced-air cooled			4/25
			_ Cast-iron series Innomotics SD Pro 1LE5683 Performance Line – self-ventilated or forced-air cooled			4/26
				Article No. supplements and special versions		4/27
					Dimensions	4/46

© Innomotics 2024

Introduction

Catalog orientation and drive selection

Overview

Step 1	Step 2	Step 3	Step 4	Step 5	Step 6	Catalog section/page
Introduction						**1**
	Innomotics VSD motors for converter operation · Introduction					**5**
		Synchronous reluctance motors for SINAMICS converters – VSD4000 line · Orientation				5/2
			Super Premium Efficiency			5/46
			_ Aluminum series Innomotics GP 1FP1014, line voltage 400 V, 50 Hz/480 V, 60 Hz/400 V, 87 Hz – self-ventilated, enclosed			5/46
			_ Cast-iron series Innomotics SD 1FP1514, line voltage 400 V, 50 Hz/460 V, 60 Hz/400 V, 87 Hz – self-ventilated, enclosed			5/48
				Article No. supplements and special versions		5/52
					Dimensions	5/76
		Standard induction motors optimized for converter operation – VSD10 line · Orientation				5/82
			Standard Efficiency			5/94
			_ Aluminum series Innomotics GP 1LE1092, line voltage 400 V, 50 Hz/460 V, 60 Hz/400 V, 87 Hz – self-ventilated, enclosed			5/94
			_ Aluminum series Innomotics GP 1LE1092, line voltage 500 V, 50 Hz/575 V, 60 Hz/500 V, 87 Hz – self-ventilated, enclosed			5/96
			_ Aluminum series Innomotics GP 1LE1092, line voltage 690 V, 50 Hz/690 V, 87 Hz – self-ventilated, enclosed			5/98
			_ Cast-iron series Innomotics SD 1LE1592, line voltage 400 V, 50 Hz/460 V, 60 Hz/400 V, 87 Hz – self-ventilated, enclosed			5/100
			_ Cast-iron series Innomotics SD 1LE1592, line voltage 500 V, 50 Hz/575 V, 60 Hz/500 V, 87 Hz – self-ventilated, enclosed			5/104
			_ Cast-iron series Innomotics SD 1LE1592, line voltage 690 V, 50 Hz/690 V, 87 Hz – self-ventilated, enclosed			5/108
				Article No. supplements and special versions		5/110
					Dimensions	5/136
	Innomotics XP explosion-protected motors					**6**
		Orientation				6/2
			Zones 21, 22, and 2 with types of protection Ex tb, Ex tc, Ex ec · IE4 Super Premium Efficiency			6/30
			_ Cast-iron series 1MB55 – self-ventilated			6/30
			Zones 21, 22, and 2 with types of protection Ex tb, Ex tc, Ex ec · IE3 Premium Efficiency			6/32
			_ Aluminum series 1MB10 – self-ventilated			6/32
			_ Cast-iron series 1MB15, 1MB16 – self-ventilated			6/34
			_ Cast-iron series 1MB55, 1MB58 – self-ventilated			6/39
			Zones 21, 22, and 2 with types of protection Ex tb, Ex tc, Ex ec · IE2 High Efficiency			6/42
			_ Aluminum series 1MB10 – self-ventilated			6/42
			_ Cast-iron series 1MB15, 1MB16 – self-ventilated			6/44
			Zones 21, 22, and 2 with types of protection Ex tb, Ex tc, Ex ec · with IE1 Standard Efficiency			6/48
			_ Aluminum series 1MB10 – self-ventilated			6/48
			Zone 1 with type of protection Ex eb · IE3 Premium Efficiency			6/50
			_ Cast-iron series 1MB1543, 1MB1643, 1MB5543, 1MB5643 – self-ventilated			6/50
			Zone 1 with types of protection Ex db, Ex db eb · IE3 Premium Efficiency			6/56
			_ Cast-iron series 1MB1553/1MB1563 IIC – self-ventilated 1MB5553/1MB5563 IIB – self-ventilated			6/56
			_ Cast-iron series 1MB1557/1MB1567 IIC – self-ventilated 1MB5557/1MB5567 IIC – self-ventilated			6/63
			_ Cast-iron series 1MB1853/1MB1863 IIC – self-ventilated 1MB5853/1MB5863 IIB – self-ventilated with Premium Insulation for VSD up to 690 V			6/66
			Zone 1 with types of protection Ex db, Ex db eb · IE2 High Efficiency			6/60
			_ Cast-iron series 1MB1556/1MB1566/1MB5556/1MB5566 – self-ventilated			6/60
				Article No. supplements and special versions		6/70
					Dimensions	6/123
	Innomotics DP application-specific motors · Introduction					**7**
		Innomotics DP application-specific motors – Marine motors · Orientation				7/2
			Special designs · Options			7/9
			_ Aluminum series 1LE10			7/9
			_ Cast-iron series 1LE15/1LE16 Basic/Performance Line			7/10
			_ Cast-iron series 1LE55/1LE56 Basic/Performance Line			7/11
			_ Aluminum series 1MB10, cast-iron series 1MB15/1MB16/1MB5			7/12

© Innomotics 2024

Overview

Innomotics GP/SD 1LE1 standard motors

Motor version	Efficiency class		Rated power at 50 Hz (values in kW) or 60 Hz (values in hp)	Frame size – motor type 63	71	80	90	100	112	132	160	180	200	225	250	280	315	Page
Innomotics GP aluminum housing																		
IEC	IE4 Super Premium Efficiency		2.2 ... 37 kW					**1LE1004**										3/9
	IE3 Premium Efficiency		0.12 ... 45 kW	**1LE1003**														3/14
			2.2 ... 37 kW					**1LE1083**										3/19
	IE2 High Efficiency		0.04 ... 37 kW	**1LE1001**														3/34
	IE1 Standard Efficiency		0.09 ... 37 kW	**1LE1002**														3/52
APAC Line	IE3 Premium Efficiency		0.12 ... 37 kW	**1LE1043**														3/62
	IE2 High Efficiency		0.75 ... 18,5 kW			**1LE1041**												3/75
ABNT Line	IR3 Rendimento Premium		0.25 ... 22 kW			**1LE1073**												3/81
Eagle Line	NEMA Premium Efficient		0.12 ... 37 kW 0.16 ... 50 hp	**1LE1023**														3/85
	NEMA Energy Efficient		0.18 ... 0.55 kW 0.25 ... 0.75 hp			**1LE1021**												3/96
Pole-changing		For a constant load torque	0.55 ... 16 kW					**1LE1011** 4/2-pole, 8/4-pole										3/98
		For square-law load torque	0.5 ... 28 kW					**1LE1011** 4/2-pole, 8/4-pole										3/99
			0.6 ... 26 kW					**1LE1012** 6/4-pole										3/99
Innomotics SD cast-iron housing																		
IEC	IE4 Super Premium Efficiency	Basic Line	2.2 ... 90 kW					**1LE1504**										3/10
		Performance Line	2.2 ... 90 kW					**1LE1604**										3/12
	IE3 Premium Efficiency	Basic Line	0.09 ... 200 kW		**1LE1503**													3/20
		Performance Line	0.75 ... 200 kW					**1LE1603**										3/24
			2.2 ... 200 kW					**1LE1583**										3/31
	IE2 High Efficiency	Basic Line	0.09 ... 200 kW		**1LE1501**													3/40
		Performance Line	0.75 ... 200 kW					**1LE1601**										3/44
	IE1 Standard Efficiency	Basic Line	0.75 ... 200 kW					**1LE1502**										3/56
APAC Line	IE3 Premium Efficiency	Basic Line	0.75 ... 200 kW			**1LE1543**												3/66
		Performance Line	0.75 ... 200 kW			**1LE1643**												3/69
	IE2 High Efficiency	Basic Line	15 ... 200 kW									**1LE1541**						3/78
ABNT Line	IR3 Rendimento Premium		9.2 ... 300 kW									**1LE1573**						3/83
Eagle Line	NEMA Premium Efficient	Basic Line	0.09 ... 185 kW 0.12 ... 250 hp		**1LE1523**													3/88
		Performance Line	0.75 ... 185 kW 1 ... 250 hp					**1LE1623**										3/92
	NEMA Energy Efficient	Basic Line	0.09 ... 0.55 kW 0.12 ... 0.75 hp		**1LE1521**													3/97

Innomotics SD 1LE5 standard motors – next generation

Motor version	Efficiency class		Rated power at 50 Hz	Frame size – motor type 63	71	80	90	100	112	132	160	180	200	225	250	280	315	355	400	450	Page
Innomotics SD cast-iron housing																					
IEC	IE4 Super Premium Efficiency	Basic Line	30 ... 315 kW												**1LE5504**						4/12
		Performance Line	160 ... 500 kW														**1LE5604**				4/15
	IE3 Premium Efficiency	Basic Line	160 ... 315 kW												1LE5503						4/20
		Performance Line	160 ... 500 kW														**1LE5603**				4/21
Innomotics SD Add cast-iron housing																					
IEC	IE4 Super Premium Efficiency	Basic Line	55 ... 315 kW												1LE5534						4/16
		Performance Line	160 ... 500 kW														**1LE5634**				4/18
			355 ... 1000 kW																**1LE5534**		4/18
	IE3 Premium Efficiency	Basic Line	160 ... 315 kW												1LE5533						4/22
		Performance Line	160 ... 500 kW														**1LE5633**				4/24
			355 ... 1000 kW																**1LE5533**		4/22
Innomotics SD Pro cast iron housing																					
IEC	IE3 Premium Efficiency	Basic Line	200 ... 315 kW												1LE5583						4/25
		Performance Line	200 ... 500 kW														**1LE5683**				4/26
			335 ... 980 kW																**1LE5583**		4/26

© Innomotics 2024

Introduction

Catalog orientation and drive selection

Overview

Innomotics VSD motors for converter operation

Innomotics GP/SD VSD4000 line reluctance motors for SINAMICS converters,
Innomotics GP/SD VSD10 line standard motors for converter operation

Motor version	Efficiency class	Rated power	Frame size – motor type														Page
			63	71	80	90	100	112	132	160	180	200	225	250	280	315	
Innomotics GP aluminum housing																	
VSD4000 line	Super Premium Efficiency	0.55 ... 30 kW			**1FP1014**												5/46
VSD10 line	Standard Efficiency	2.2 ... 18.5 kW					**1LE1092**										5/94
Innomotics SD cast-iron housing																	
VSD4000 line	Super Premium Efficiency	0.55 ... 45 kW			**1FP1514**												5/48
VSD10 line	Standard Efficiency	2.2 ... 200 kW					**1LE1592**										5/100

Innomotics XP explosion-protected motors

Motor version	Efficiency class		Rated power	Frame size – motor type																		Page
				63	71	80	90	100	112	132	160	180	200	225	250	280	315	355	400	450		
Motors for Zones 21, 22, and 2 with types of protection Ex tb, Ex tc, Ex ec · aluminum housing Innomotics XP																						
IEC	IE3 Premium Efficiency		0.37 ... 18.5 kW			**1MB10.3**																6/32
	IE2 High Efficiency		0.37 ... 18.5 kW			**1MB10.1**																6/42
	IE1 Standard Efficiency		0.75 ... 18.5 kW					**1MB10.2**														6/48
Motors for Zones 21, 22, and 2 with types of protection Ex tb, Ex tc, Ex ec · cast-iron housing Innomotics XP																						
IEC	IE4 Super Premium Efficiency		355 ... 1000 kW																**1MB55.4**			6/30
	IE3 Premium Efficiency	Basic Line	0.18 ... 200 kW		**1MB15.3**																	6/34
		Performance Line	1.5 ... 200 kW					**1MB16.3**														6/34
		Advanced insulation system	355 ... 1000 kW																**1MB55.3**			6/39
		Premium insulation system	335 ... 980 kW																**1MB58.3**			6/39
	IE2 High Efficiency	Basic Line	0.09 ... 200 kW		**1MB15.1**																	6/44
		Performance Line	0.75 ... 200 kW					**1MB16.1**														6/44
Motors for Zone 1 with type of protection Ex eb · cast-iron housing Innomotics XP																						
IEC	IE3 Premium Efficiency	Basic Line	0.25 ... 80 kW		**1MB1543**																	6/50
		Performance Line	1.3 ... 80 kW					**1MB1643**														6/50
		Basic Line	64 ... 165 kW												1MB5543							6/50
		Performance Line	64 ... 165 kW												1MB5643							6/50
Motors for Zone 1 with types of protection Ex db, Ex db eb · cast-iron housing Innomotics XP																						
IEC	IE3 Premium Efficiency		0.09 ... 90 kW		**1MB1553/1MB1563**																	6/56
			55 ... 460 kW										1MB5553/1MB5563									6/56
			0.12 ... 75 kW		**1MB1557/1MB1567**																	6/63
			90 ... 355 kW										1MB5557/1MB5567									6/63
			2,2 ... 85 kW						**1MB1853/1MB1863**													6/66
			55 ... 450 kW										1MB5853/1MB5863									6/66
IEC	IE2 High Efficiency		0.12 ... 75 kW		**1MB1556/1MB1566**																	6/60
			55 ... 315 kW										1MB5556/1MB5556									6/60

© Innomotics 2024

Overview

Innomotics DP application-specific motors

Motor version	Efficiency class		Rated power at 50 Hz (values in kW) or 60 Hz (values in hp)	Frame size – motor type															Page
				63	71	80	90	100	112	132	160	180	200	225	250	280	315	355	
Marine motors – aluminum housing																			
IEC	IE4 Super Premium Efficiency		2.2 ... 37 kW					**1LE1004**											7/9
	IE3 Premium Efficiency		0.37 ... 45 kW			**1LE1003**													7/9
	IE2 High Efficiency		0.12 ... 45 kW	**1LE1001**															7/9
	IE1 Standard Efficiency		0.09 ... 37 kW	**1LE1002**															7/9
IEC – with explosion protection	IE3 Premium Efficiency		0.37 ... 18.5 kW			**1MB10.3**													7/12
	IE2 High Efficiency		0.37 ... 18.5 kW			**1MB10.1**													7/12
	IE1 Standard Efficiency		0.75 ... 18.5 kW					**1MB10.2**											7/12
Eagle Line	NEMA Premium Efficient		0.37 ... 37 kW 0.5 ... 50 hp	**1LE1023**															7/9
	NEMA Energy Efficient		0.37 ... 0.55 kW 0.5 ... 0.75 hp			**1LE1021**													7/9
Pole-changing	–		0.5 ... 28 kW					**1LE1011**											7/9
	–		0.6 ... 26 kW					**1LE1012**											7/9
Marine motors – cast-iron housing																			
IEC	IE4 Super Premium Efficiency	– Basic Line	2.2 ... 200 kW					**1LE1504**											7/10
			160 ... 315 kW												1LE55.4				7/11
		– Performance Line	2.2 ... 200 kW					**1LE1604**											7/10
			160 ... 500 kW														**1LE56.4**		7/11
	IE3 Premium Efficiency	– Basic Line	0.18 ... 200 kW		**1LE1503**														7/10
			160 ... 315 kW												1LE55.3				7/11
		– Performance Line	1.5 ... 200 kW					**1LE1603**											7/10
			160 ... 500 kW														**1LE56.3**		7/11
	IE2 High Efficiency	– Basic Line	0.09 ... 200 kW		**1LE1501**														7/10
		– Performance Line	0.75 ... 200 kW					**1LE1601**											7/10
IEC – with explosion protection	IE3 Premium Efficiency	– Basic Line	0.18 ... 200 kW		**1MB15.3**														7/12
		– Performance Line	1.5 ... 200 kW					**1MB16.3**											7/12
			0.09 ... 90 kW		**1MB1553**														7/12
			55 ... 460 kW														**1LE5553**		7/11
	IE2 High Efficiency	– Basic Line	0.09 ... 200 kW		**1MB15.1**														7/12
		– Performance Line	0.75 ... 200 kW					**1MB16.1**											7/12
Eagle Line	NEMA Premium Efficient	– Basic Line	0.18 ... 185 kW 0.25 ... 250 hp		**1LE1523**														7/10
		– Performance Line	2.2 ... 185 kW 3 ... 250 hp					**1LE1623**											7/10
	NEMA Energy Efficient	– Basic Line	0.09 ... 0.55 kW 0.12 ... 0.75 hp		**1LE1521**														7/10

© Innomotics 2024

Introduction

Cut-away diagram of a low-voltage motor

Overview

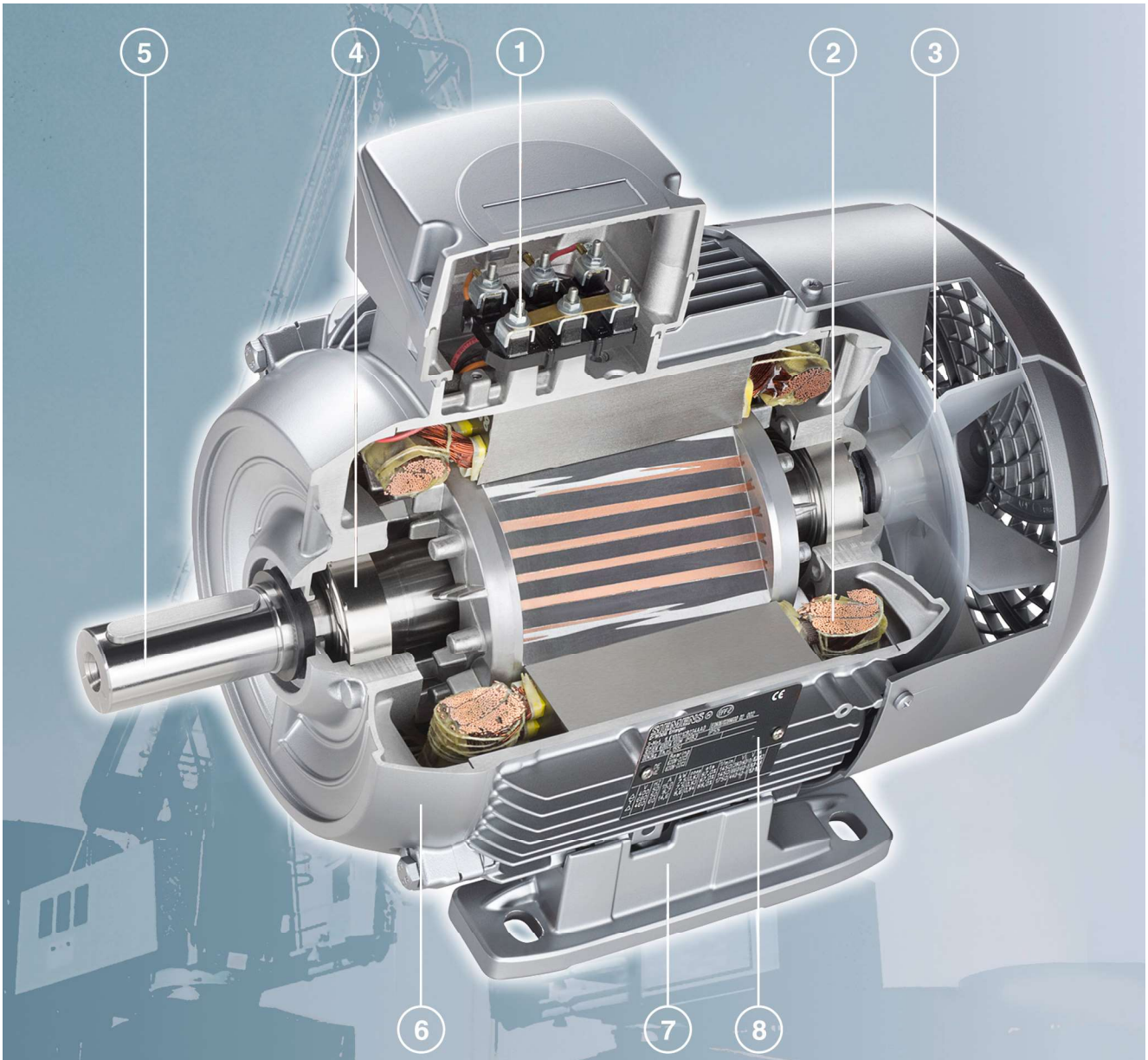

① Motor protection page 1/40
Motor connection and terminal box page 1/43
Voltages, currents and frequencies page 1/27

② Windings and insulation page 1/33
Coolant temperature and installation altitude page 1/36

③ Heating and ventilation page 1/37
Mechanical version page 1/56
Degrees of protection page 1/55
Modular technology page 1/95
Special technology page 1/117

④ Bearings and lubrication page 1/66

⑤ Shaft and rotor page 1/61
Balance and vibration severity page 1/64

⑥ Colors and paint finish page 1/15

⑦ Types of construction page 1/56

⑧ Rating plate and additional rating plates page 1/28

© Innomotics 2024

Overview

To protet the drives against corrosion and external influences, high-quality paint systems are available in various colors.

Additional identification code **-Z** with order code							
S00 [7]	**S01**	**Standard version**[6]	**S02** [6]	**S03** [6] [8]	**S04** [6]	**S08** [9]	**S09** [9] [10]
Paint systems, suitability for atmospheric-corrosivity categories in accordance with EN ISO 12944-2:2017							
Unpainted, but unfinished cast-iron surfaces are primed	Unpainted, motor primed	C2 Standard paint system	C3 Special paint system	C4 Special paint system "sea air resistant"	C5 Special paint system "offshore"	C5mid Special paint system with durability "medium"	CX Special paint system for offshore with durability "high"
Use							
The motors can be supplied unpainted on request.	The motors can be supplied with just a primer coat on request.	Indoor unheated spaces with varying temperature and relative humidity, low frequency of condensation and low pollution. Outdoor in dry and cold zones with a short time of wetness, low pollution.	Moderate frequency of condensation and medium pollution (SO2 or chlorides), urban areas, subtropical and tropical zone with low pollution. Standard paint system for VIK design (CO2).	High frequency of condensation and high pollution, industrial processing plants, polluted urban areas, coastal areas without spray of salt water or exposure to strong effect of de-icing salts.	ISpaces with very high pollution from production process, outdoor installations exposed to direct weather conditions, significant effect of SO2 or chlorides, offshore maritime climate.	Industrial areas with high frequency of condensation, humidity, pollution, and aggressive atmosphere. Coastal areas with high salinity, sheltered positions on coastlines, unventilated buildings in subtropical and tropical zone.	Offshore areas with high salinity, spaces with almost permanent condensation or extensive periods of exposure to extreme humidity effects. Industrial areas with extreme aggressive atmosphere with high pollution. Unventilated buildings in humid tropical zones exposed to outdoor factors to an extent that is particularly corrosion-stimulating.
Durability according to EN ISO 12944-1:2017							
–	–	C2 low	C3 low	C4 low	C5 low	C5 medium	C5 high
Also fulfills requirements of categories							
–	–	–	C2 medium	C2 high C3 medium	C3 high C4 medium	C4 high	C5 very high
Total film thickness for outer surface - nominal film thickness in µm - aluminum / cast iron [2] [3]							
0 / 30 [4] [5]	30 / 60	30 / 60	60 / 90	120 / 150	– / 170	– / 230	– / 400

Fortsetzung der Tabelle auf der nächsten Seite.

1) Machined laminated rotor core, shaft, inner diameter of cast-iron housing, interior surfaces of cast-iron bearing plates.

2) Total film thickness:
- The specified film thickness represents average values for the external motor surfaces.
- The film thickness may differ at inaccessible locations (pockets/recesses or bases of ribs).

3) The paint coat can become electrostatically charged where there is a thickfilm. Electrostatic discharges can occur. There is a risk of explosion if potentially explosive mixtures are also present at this moment. This can result in death, serious injury or material damage. When painted surfaces are recoated, one of the following conditions must be fulfilled:
- Limit the total paint film thickness according to the explosion protection group:
  - IIA, IIB: Total paint film thickness ≤ 2 mm
  - IIC: Total paint film thickness ≤ 0.2 mm for motors of group II (gas)
- Limit the surface resistance of the paint used:
  - Surface resistance ≤ 1 GΩ for motors of groups II and III (gas and dust)
- Charge transfer limit:
  - 60 nC for group I or group IIA devices
  - 25 nC ffor group IIB devices
  - 10 nC ffor group IIC devices
  - 200 nC ffor group III devices
- Breakdown voltage ≤ 4 kV for explosion group III (dust only)

  Note:
  Innomotics motors are optionally also certified in gas group IIC for a film thickness of more than 200 µm. Paints with film thickness exceeding 200 µm have been tested for electrostatic charging. Motors with a coating thickness exceeding 200 µm may only be painted over if the conditions mentioned above are complied with.

4) Aluminum motors/components without a paint finish already meet the requirements for corrosivity class C2. It is not therefore necessary to apply paint to components that are not visible. The paint finish is therefore applied only for the purpose of coloring.

5) Aluminum motors with cast-iron components (e.g. DE bearing plate) have a primer coat of > 30 µm on cast-iron components.

6) Innomotics XP cast-iron motors suitable for dust hazardous areas (zone 21/22) are used conductive paint systems with color shades available.

7) Not possible for Innomotics XP cast-iron motors suitable for dust hazardous areas (zone 21/22).

8) Innomotics XP aluminum motors suitable for dust hazardous areas (zone 21/22) are used conductive paint systems with color shades available.

9) Conductive paint systems with color shades available according to tables in the page 1/16.

10) When ordering with order code **S09,** order code **F74** and **M11** included.

© Innomotics 2024

Introduction

Colors and paint finish

Overviw

Additional identification code **-Z** with order code

S00 [7]	S01	Standard version[6]	S02 [6]	S03 [6] [8]	S04 [6]	S08 [9]	S09 [9] [10]

Other available order codes	
S05 [1]	**Interior paint -finish**, all bare internal components primed with rust inhibitor. The motors can be supplied with internal paint finish on request. Recommended when there is a risk of heavy condensate formation.
S06 [6] [8]	**Polyurethane-based top coat**, can only be ordered with **S03** and **S04** (with S08 and S09 included as standard with Polysiloxan). Exposure to direct sunlight (UV l22 ight) may cause a change in color. When color stability is a requirement, a polyurethane-based paint system is recommended for the top coat (RAL 7030). Colors other than RAL 7030 are available on request.
Top coat colors	
Standard version	RAL 7030 (stone grey)
Available colors	Alternative standard and special RAL colors must be ordered with order code **Y53**, **Y56** or **Y66** and specification in plain text of the required RAL number (or another number when not RAL). (See tables for order codes **Y53**, **Y56** and **Y66** on the following page for selection of available numbers/colors). **S06** is available only in standard RAL 7030.
Treatment of bare metal areas of shaft extensions and flanges	
	Coated with anti-corrosion agent that repels water and palm sweat.

Motors in frame sizes 400 and 450 - here the paint procedure is different

S00	S01	Standard version	S02	S03	S04	S08	S09
Paint systems, suitability for atmospheric-corrosivity categories in accordance with EN ISO 12944-2:2017 (frame sizes 400 and 450)							
Unpainted, but unfinished cast-iron surfaces are primed	Unpainted, motor primed	C2 Standard paint system	C3 Special paint system	C4 Special paint system "sea air resistant"	SC5 Special paint system "offshore"	–	–
Kunstharz	Hydro-2K-Polyurethan-Grundierung	Hydro-2K-Polyurethan	Hydro-2K-Polyurethan	Hydro-2K-Polyurethan	Hydro-2K-Polyurethan	–	–
Dauerhaftigkeit nach DIN EN ISO 12944-2:2017 (Baugrößen 400 und 450)							
–	–	C2 mittel	C3 mittel	C4 mittel	C5 mittel	–	–
Gesamtschichtdicke für Außenflächen – Nennschichtdicke in µm [2] [3] (Baugrößen 400 und 450)							
60	120	120	180	240	320	–	–

Note: For transport, the bare parts are coated with anti-corrosion paint which will last for a limited amount of time.

Table continues on the next page.

© Innomotics 2024

Overview

Paint finish in other standard RAL colors – Order code Y53 (RAL number is required in plain text)

RAL-No.	Color name	RAL-No.	Color name
1015	Light ivory	7011	Iron grey
3000	Flame red	7016	Anthracite grey
5002	Ultramarine blue	7031	Blue grey
5009	Azure blue	7032	Pebble grey
5010	Gentian blue	7035	Light grey
5012	Light blue	7037	Dusty grey
5015	Sky blue	8012	Red brown
6011	Reseda green	9005	Jet black
7001	Silver grey	9010	Pure white

Paint finish in special RAL colors - Order code Y56 (RAL number is required in plain text)

RAL-No.	Color name	RAL-No.	Color name
1013	Oyster white	6020	Chrome green
2004	Pure orange	6021	Pale green
3002	Carmine red	6032	Signal green
3012	Beige red	7005	Mouse grey
3020	Traffic red	7012	Basalt grey
5000	Violet blue	7021	Black grey
5003	Saphire blue	7022	Umbra grey
5005	Signal blue	7024	Graphite grey
5007	Brilliant blue	7038	Agate greyu
5014	Pigeon blue	7042	Traffic grey A
5017	Traffic blue	7045	Telegrey 1
5018	Turquoise blue	9001	Cream
5019	Capri blue	9002	Grey white
5021	Water blue	9003	Signal white
5024	Pastel blue	9006	White aluminum
6000	Patine green	9007	Grey aluminum
6002	Leaf green	9016	Traffic white
6010	Grass green	9018	Papyrusvwhite
6018	Yellow green	9023	Pearl dark grey

Pint finish in non-standard colors – Orde code Y66 - rarely ordered RAL-colors, weakly opaque colors, non-RAL-colors (color shade is required in plain text)

RAL-No.	Farbname	RAL-No.	Color name
1001	Beige	6017	May green
1002	Sand yellow	6019	Pastel green
1003	Signal yellow	6024	Traffic green
1004	Golden yellow	6025	Fern green
1005	Honey yellow	6026	Opal green
1006	Maize yellow	6027	Light green
1007	Daffodil yellow	6029	Mint green
1011	Brown beige	6033	Mint turquoise
1012	Lemon yellow	6034	Pastel turquoise
1014	Ivory	7000	Squirrel grey
1018	Zinc yellow	7004	Signal grey
1019	Grey beige	7009	Green grey
1021	Colza yellow	7010	Tarpaulin grey
1023	Traffic yellow	7013	Browun grey
1028	Melon yellow	7015	Slate grey
1033	Dahlia yellow	7023	Concrete grey
1036	Pearl gold	7026	Granite grey
2000	Yellow orange	7033	Cement grey
2001	Red orange	7034	Yellow grey
2002	Vermilio	7036	Platinum grey
2003	Pastel orange	7039	Quartz grey
2008	Bright red orange	7040	Window gre
2009	Traffic orange	7043	Traffic grey B
2010	Signal orange	7044	Silk grey
2011	Deep orange	7046	Telegrey 2
2012	Salmon orange	7047	Telegrey 4
3001	Signal red	7048	Pearl mouse grey
3003	Ruby red	8001	Ockerbraun
3004	Purple red	8002	Signal brown
3005	Wine red	8003	Clay brown
3007	Black red	8008	Olive brown
3011	Brown red	9004	Signal black
3013	Tomato red	9011	Graphite black
3015	Light pink	9017	Traffic black
3016	Coral red	AS2700_N52	
4005	Blue lilac	BS06_C39	
4006	Traffic purple	BS381C_637	
5001	Green blue	BS381C_355	
5011	Steel blue	BS4800_00E55	
5013	Cobalt blue	BS4800_06E51	
5020	Ocean blue	BS4800_14E53	
5022	Night blue	MAERSK 30070	
5023	Distant blue	MUN10B6/6	
6001	Emeral green	MUN10GY8/4	
6003	Olive green	MUN10R5/16	
6004	Blue green	MUN7,5BG7/2	
6005	Moos green	NCS_0502_B	
6007	Bottle green	NCS_S1000_N	
6009	Fir green	NCS_S_1502_B	
6012	Black green	NCS_S7500_N	
6013	Reed green	PROROT	
6016	Turquoise green		

Coating structure and colors not specified in the catalog are available on request.

[1] Nur für Motoren mit Spannungskennziffer 27 oder 40.

© Innomotics 2024

Introduction

Overview

Connected in star for dispatch – Order code **M01**
The terminal board of the motor is connected in star for dispatch.

Connected in delta for dispatch – Order code **M02**
The terminal board of the motor is connected in delta for dispatch.

Packing weights

For motors Frame size	Type	For land transport Type of construction IM B3 in box Tare kg	on ISPM wooden base board with telescopic box Tare kg	on pallet Tare kg	in crate Tare kg	Types of construction IM B5, IM V1 in box Tare kg	on ISPM wooden base board with telescopic box Tare kg	on pallet Tare kg	in crate Tare kg
	1LE1...- **1PC1...-** **1MB1...-**								
63 M	**0B.2**	0.65	–	–	–	0.65	–	–	–
71 M	**0C.2**	0.65	–	–	–	0.65	–	–	–
80 M	**0D.2**	0.65	–	–	–	0.65	–	–	–
90 S	**0E.0**	0.65	–	–	–	0.65	–	–	–
100 L	**1A.4**	–	5.0	–	–	–	5.0	–	–
	1A.5	–	5.0	–	–	–	5.0	–	–
	1A.6	–	5.0	–	–	–	5.0	–	–
112 M	**1B.2**	–	5.0	–	–	–	5.0	–	–
	1B.6	–	5.0	–	–	–	5.0	–	–
132 S	**1C.0**	4.7	–	–	–	5.2	–	–	–
	1C.1	4.7	–	–	–	5.2	–	–	–
132 M	**1C.2**	4.7	–	–	–	5.2	–	–	–
	1C.3	4.7	–	–	–	5.2	–	–	–
	1C.6	8.7	–	–	–	9.2	–	–	–
160 M	**1D.2**	4.8	–	–	–	5.7	–	–	–
	1D.3	4.8	–	–	–	5.7	–	–	–
160 L	**1D.4**	4.8	–	–	–	5.7	–	–	–
	1D.6	8.8	–	–	–	9.7	–	–	–
180		–	–	8.0	–	–	–	10.0	–
200		–	–	11.0	–	–	–	13.0	–
225		–	–	14.0	–	–	–	17.0	–
250		–	–	22.0	–	–	–	25.0	–
280		–	–	24.0	–	–	–	27.0	–
315		–	–	28.0	–	–	–	32.0	–
315	**1LE5, 1MB5**	–	–	32.0	–	–	–	46.0	–
355	**1LE5, 1MB5**	–	–	58.0	–	–	–	78.0	–
315	**1LE5, 1MB5**	–	–	50.0	–	–	–	40.0	–
355	**1LE5, 1MB5**	–	–	60.0	–	–	–	50.0	–

Data apply for individual packaging. Wire-lattice pallets can be used, order code **B99**.

Safety notes

Printed safety notes in German/English and safety notes in the language of the country of use are supplied as standard with each motor

Motor documentation

Motor documentation is available online by selecting the motor in the SPC and by downloading the required documents.

Optional single documentation ordered with the motor, e.g.:
B02: Acceptance test certificate 3.1 in accordance with EN 10204,
B60: Electrical data sheet,
B61: Dimensional drawing

Optional documentation package ordered with the motor:
B90: Documentation package "Basic"
B91: Documenation package "Advanced"
B92: Documenation package "Projects"

Test certificates

Inspection certificate 3.1 in accordance with **EN 10204** – Order code **B02**

An inspection certificate 3.1 in accordance with EN 10204 can be supplied for most motors.
The delivery time for the manufacturer's test certificate may differ from the delivery time for the motor and will be dispatched by E-mail.

Type test with temperature-rise run for horizontal motors

_ **With acceptance** – Order code **B83**

_ **Without acceptance** – Order code **B82**

During the type test, a temperature-rise test is performed; no-load, short-circuit, and load characteristics are recorded; the iron losses and friction losses are determined and the efficiency is calculated from the summed losses. This option is only applicable to motors with a horizontal type of construction. Acceptance testing is performed by an external representative (e.g. customer, classification society). No acceptance test is performed when order code **B82** is stated.

The measurement uncertainty is not taken into account when determining a statement of conformity (according to clause 4.2.1 of ILAC-G8:09/2019).

Acceptance is offered in, on-site in a factory or remotely. Remote acceptance is available in two options:

Remote Acceptance B77: Acceptance process shared via MS Teams

Hybride Acceptance B78: combined on-site acceptance with remote acceptance

Order codes B77 and B78 may only be used in conjunction with order code B83.

© Innomotics 2024

Overview

Standard warranty and extension of liability for defects

The standard warranty period is quoted in the standard conditions of supply and delivery and is 12 months.
This is valid if nothing else is stated. It is possible to obtain an extension of the liability for defects beyond the standard liability period.

Motors	Series	Standard warranty	Extension of the liability for defects
Innomotics GP	1LE10	12 months	Not available
Innomotics SD	1LE15 / 1LE55 Basic Line	12 months	1LE1 see page 3/132 1LE5 see page 4/27
Innomotics SD	1LE16 / 1LE56 Performance Line	36 months	1LE1 not available 1LE5 see page 4/27
Innomotics GP VSD4000	1FP10	36 months	Not available
Innomotics SD VSD4000	1FP15	36 months	Not available
Innomotics GP VSD10	1LE109	12 months	Not available
Innomotics SD VSD10	1LE159	12 months	see page 5/128
Innomotics XP	1MB10	12 months	Not available
Innomotics XP	1MB151 / 1MB551 / 1MB581 Basic Line (Ex tb), 1MB152 / 1MB552 / 1MB582 Basic Line (Ex tc), 1MB153 / 1MB553 / 1MB583 Basic Line (Ex ec)	12 months	1MB1 not available 1MB5 see page 6/116
Innomotics XP	1MB161 / 1MB561 Performance Line (Ex tb), 1MB162 / 1MB562 Performance Line (Ex tc), 1MB163 / 1MB563 Performance Line (Ex ec)	36 months	1MB1 not available 1MB5 see page 6/116
Innomotics XP	1MB154 / 1MB554 Basic Line (Ex eb)	12 months	see page 6/109
Innomotics XP	1MB164 / 1MB564 Performance Line (Ex eb)	36 months	Not available
Innomotics XP	1MB155 / 1MB555 (Ex db, Ex db eb)	12 months	see page 6/114

For the case of a new product order

With the following optional order suffixes listed in the table, extension of the liability for defects beyond the standard liability period is possible in conjunction with a new order for a product.

The markup on the product price is graded according to the duration of the extension.

Extension of the liability for defects for 1LE15, 1MB15, 1LE5, and 1MB5 motors	
Additional identification code - **Z** with order code	Description
Q80	Extension of the liability for defects period by 12 months to a total of 24 months (2 years) from delivery
Q81	Extension of the liability for defects period by 18 months to a total of 30 months (2.5 years) from delivery
Q82	Extension of the liability for defects period by 24 months to a total of 36 months (3 years) from delivery
Q83	Extension of the liability for defects period by 30 months to a total of 42 months (3.5 years) from delivery
Q84	Extension of the liability for defects period by 36 months to a total of 48 months (4 years) from delivery
Q85	Extension of the liability for defects period by 48 months to a total of 60 months (5 years) from delivery

Wearing parts (bearings) are excluded from the warranty extension.

© Innomotics 2024

Introduction

Versions in accordance with standards and specifications

Overview

Applicable standards and specifications

The 1LE. motors comply with the IEC 60034-1 series of international product standards for rotating electrical machines and, in particular, those parts that are listed in the table below.

Title	IEC/EN	DIN EN
General specifications for rotating electrical machines	IEC 60034-1, IEC 60085	EN 60034-1
Specification of the losses and efficiency of rotating electrical machines	IEC 60034-2-1	EN 60034-2-1
General-purpose three-phase induction motors having standard dimensions and powers	IEC 60072 Mounting dimensions and power series only (no assignment of frame size to power)	EN 50347 Mounting dimensions according to IEC 60072 and power assignment for Europe
Starting performance of rotating electrical machines	IEC 60034-12 [1)]	EN 60034-12 [1)]
Terminal designations and direction of rotation for electrical machines	IEC 60034-8	EN 60034-8
Designation for types of construction, mounting, and terminal box position (IM code)	IEC 60034-7	EN 60034-7
Terminal box cable entries	–	DIN 42925
Built-in thermal protection	IEC 60034-11	EN 60034-11
Noise limits of rotating electrical machines	IEC 60034-9	EN 60034-9
IEC standard voltages	IEC 60038	IEC 60038
Cooling methods of rotating electrical machines (IC code)	IEC 60034-6	EN 60034-6
Vibration severity of rotating electrical machines	IEC 60034-14	EN 60034-14
Vibration limits	–	ISO 10816
Degrees of protection for rotating electrical machines (IP code)	IEC 60034-5	EN 60034-5
International efficiency classes for rotating electrical machines (IE code)	IEC 60034-30-1	EN 60034-30
In addition, the following applies to Ex motors:		
General provisions	IEC/EN 60079-0	EN 60034-30-1
Flameproof enclosure "d"	IEC/EN 60079-1	EN 60079-1
Increased safety "e"	IEC/EN 60079-7	EN 60079-7
Type of protection "n" (non-sparking)	IEC/EN 60079-15	EN 60079-15
Areas containing flammable dust	IEC/EN 60079-31	EN 60079-31

The following applies to explosion-protected motors:

Since the requirements of explosion-protected motors comply with the European standards EN 60079-0, EN 60079-1, EN 60079-7, EN 60079-15, EN 60079-31 and Directive 2014/34/EU (ATEX 95), the certificates issued by authorized testing agencies (PTB, FTZU, etc.) are accepted by all member states of the EU. The remaining members of CENELEC, Switzerland in particular, also accept the certificates.
Tolerances for electrical data

Tolerances for electrical data

According to EN 60034, the following tolerances are permitted: Motors that comply with EN 60034-1 must have a voltage tolerance according to Area A (see diagram on page 1/27).
If this is fully utilized, the admissible limit temperature of the temperature class may be exceeded by 10 K.

Efficiency η at
$P_{rated} \leq 150$ kW: $-0.15 \cdot (1 - \eta)$
$P_{rated} > 150$ kW: $-0.1 \cdot (1 - \eta)$

Where η is a decimal number.

$$\text{Power factor} \quad - \frac{1 - \cos \varphi}{6}$$

- Minimum absolute value: 0.02
- Maximum absolute value: 0.07

Slip ±20 % (for motors < 1 kW ±30 % is admissible)
Locked-rotor current +20 %
Locked-rotor torque –15 % to +25 %
Breakdown torque –10 %
Moment of inertia ±10 %

For more details, see section "Voltages, currents and frequencies" on page 1/27.

Certifications

Product certifications are differentiated in terms of safety-related certificates and efficiency certificates.

Since 2011, it has been obligatory for low-voltage motors with power ratings in the range of 0.75 to 375 kW (2-, 4-, and 6-pole) to be classified in accordance with the IEC 60034-30-1 efficiency standard and to be marked with the corresponding IE code (International Efficiency IE1, IE2, or IE3). The efficiency is determined using the summed losses method in accordance with IEC 60034-2-1.

Energy-saving motors for the European Economic Area in accordance with EU Regulation 640/2009 – valid until June 30, 2021 (from July 1, 2021, EU Regulation 2019/1781 comes into force)

Since January 2017, all low-voltage motors that fall within the scope of the EU Regulation must fulfill the specifications of international efficiency class IE3 or IE2.

- Line voltage ≤ 1000 V
- Line frequency 50 or 50/60 Hz and 60 Hz
- Power range 0.12 to 0.74 IE2
  Power range 0.75 to 1000 kW IE3
- Pole number 2-, 4-, 6- and 8-pole
- Continuous duty S1, S3>80 % and S6>80 %

© Innomotics 2024

Overview

Energy-saving motors for the North-American economic area in accordance with EISA

In accordance with EISA, modified conditions have been in effect since June 1, 2016.
This law stipulates that all motors must comply with the requirements stated in NEMA MG1 Table 12-12 (NPE = Nema Premium Efficient). From this date onwards, therefore, motors previously covered by the EPAct must also comply with NPE. The NPE requirements apply to motors with the following characteristics / operating conditions:

- Line voltage ≤ 600 V
- Line frequency 60 Hz
- Power range 1 hp to 500 hp
- Number of poles: 2-, 4-, 6-, 8-pole motors and geared motors
- Continuous duty S1

Explosion-protected motors are also included.

Exclusions from the EISA efficiency requirements:

- Brake motors
- Converter motors

Note:

Order code **D30**: el. acc. to NEMA
Order code **D31**: UL version
Order code **D40**: CSA version

These options can be ordered for motors that are not subject to the EISA specifications (e.g. for use outside North America).

Options **D30**, **D31** and **D40** do not authorize operation within North America.

The logo NEMA Premium is a registered trademark. It is only permitted to be used by companies that voluntarily submit to the control of the NEMA organization.

Approval for the USA: UL safety and DoE listing

For the USA, the motor series with following motor types are listed and marked with the certification number **CC032A**:

Fulfilling IE3 and NEMA Premium Efficiency MG1 Table 12-12

- GP/SD Eagle line (1LE1023/1LE1523)
- GP/SD with Premium Insulation (1LE1083/1LE1583) plus option code **D41**
- SD Add (1LE5533, 1LE5633)
- SD Pro with Premium Insulation (1LE5583, 1LE5683)

Fulfilling IE4 and NEMA Premium Efficiency MG1 Table 12-12

- SD (1LE5504 SH280) plus option code **D41**
- SD Add (1LE5534, 1LE5634) frame size 315 to 450
- SD Pro with Premium Insulation (1LE5584)

Additional specifications to NEMA MG1: Nominal efficiency acc. to NEMA MG1 Table 12-12, design letter, code letter, CONT, CC No. CC 032A (Innomotics) and service factor SF 1.15.

The above mentioned motor series remain certified up to a rated voltage of 600 V from Underwriters Laboratories Inc. and are marked accordingly ("Recognition Mark" = R/C).

CC032A

UL approval does not apply to motors for Zones 1, 2, 21, 22 or marine motors.

Approval for Canada: CSA safety and CSA Energy Efficiency Verification

In April 2012, the EISA requirements were implemented in Canada; in this case, all powers are subject to certification without the restrictions applicable to the NEMA frame sizes. The above mentioned motor series are certified for Canada through the Canadian Standard Association (CSA), listed by the Office of Energy Efficiency (OEE) and marked with both the CSA safety logo and the CSA efficiency label. These motors comply with the efficiency requirements of the new CSA standard C390-10. The efficiency is determined in the same manner as with IEC 60034-2-1. Order code **D40** does not authorize importing into Canada.

Externally or internally mounted components which are used are listed by CSA or are used by manufacturers in accordance with regulations. Suitability in the final application must be verified.

Approval does not apply to 1MB1 motors for Zones 1, 2, 21 and 22 or marine motors.

QPS Safety Certification Mark

The label of the accredited certification body cQPSus permits to use the equipment in the North American and Canada market.

The cQPSus Label demonstrates customer, distributors as well Regulatory Authorities Having Jurisdiction (AHJs) across the USA and Canada that the equipment has been tested, certified and complies the required North American safety standards and codes.

The equipment can be used in hazardous location according with the North American National Electrical Code (NEC) NEC 500, NEC 505 or NEC 506 and the Canadian Electrical Code (CEC) Article 18 und Annex J respectively to the marked Classification or Zone on the equipment.

© Innomotics 2024

Introduction

Versions in accordance with standards and specifications

Overview

NOM – Norma Official Mexicana

Motors which are delivered as stand-alone deliveries must comply with the standard NOM-016 ENER 2016 and be marked with the NOM logo. This is the responsibility of each importer and the certificate as such is the sole property of the importer and is not transferable

NOM

Korea certification – Order code **D33**

Minimum efficiencies required by law

According to a legislative amendment with reference to the MKE-2015-28 (Ministry of Knowledge Economy Korea) dated February 12, 2015, Minimum Efficiency IE3 became obligatory in Korea on the following dates:

- October 1, 2015 for motors ranging from 37 to 200 kW
- October 1, 2016 for motors ranging from 200 to 375 kW
- October 1, 2018 for motors ranging from 0.75 to 37 kW

For this reason, the Innomotics GP/SD APAC series (Asia/Pacific) with efficiency class IE3, which complies with the IE3 energy efficiency requirements for line frequencies 50 Hz and 60 Hz (P50), was launched onto the market:

- Innomotics GP,
  2-, 4-, and 6-pole motors of the 1LE1043 motor series
- Innomotics SD,
  2-, 4-, and 6-pole motors of the 1LE1543 and 1LE1643 motor series

Scope of Korean standard KS C 60034-2-1

This Korean standard is applicable to three-phase asynchronous motors with the following parameters:

Voltage:	≤ 600 V
Power supply:	60 Hz three-phase
Rated power:	0.75 ... 375 kW
Number of poles:	2, 4, 6 and 8
Speed:	Constant
Coolant temperature:	≤ 40 °C
Mounting method:	Foot or flange-mounted

Korea Energy Label

Order code **D33** KEA (Korea Energy Agency KEA) Korea Energy Efficiency Label can be ordered only for those motors which comply with Korean efficiency requirements. Confirmation that the motor efficiency and power factor comply with KS C 60034-2-1 is provided by certification.

The Korea Energy Label includes the following information:

- Full-load efficiency
- Motor Type (MT)
- Rated output power
- No. of poles
- CO_2 emissions per hour
- Energy costs per annum

Rating plate

KEA-certified motors with order code **D33** are fitted with a modified rating plate that indicates the admissible minimum energy efficiency value (P50 for 60 Hz) in accordance with the Korean Energy Efficiency Ordinance with reference to Korean Standard KS C 60034-2-1.

The energy efficiency values stipulated by KS C 60034 are identical to the international efficiency values IE (IEC 60034-30).

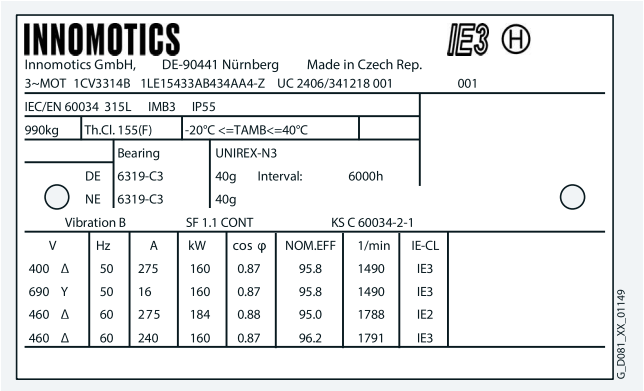

You will find a complete list of KEA-certified motors (APAC Line) on the selection tables in Chapter 2.

1PC3 motors: 1PC3 motors are also covered by certification provided that the electrical design complies with local requirements as stipulated in standard KS C 60034-2-1. Please contact QC for further clarification if required.

Motors from the APAC Line can be ordered with or without order code **D33** depending on the final destination region.

© Innomotics 2024

Overview

Energy-saving motors for China: China Energy Label

In 2012, the directive for the China Energy Label was redefined. Applicability was extended to explosion-protected motors.

- Line voltage ≤ 1000 V
- Line frequency 50 Hz
- Power range 0.75 kW to 375 kW
- Number of poles: 2-, 4-, 6-, 8-pole
- Continuous duty S1

The minimum requirements for the efficiency classes previously defined in the Chinese standard GB 18613-2012 were classified in the new standard GB 18613-2020 (Minimum Allowable Values of Energy Efficiency and Energy Efficiency Grades for Small and Medium Three-Phase Asynchronous Motors) in accordance with International Efficiency IE3-5.

IEC IE class	GB 18613-2020
IE5	Grade 1
IE4	Grade 2
IE3	Grade 3

The 1LE1/5 motor series for IE3 and IE4, plus order code **D34** were previously certified for China Energy Label 20124421.

CCC safety certification is also required for motors with lower powers.

CCC – China Compulsory Certification – Order code **D01**

Motors with small powers (small power motors) that are exported to China must be certified up to a rated power of:

- 2-pole: ≤ 2.2 kW
- 4-pole: ≤ 1.1 kW
- 6-pole: ≤ 0.75 kW
- 8-pole: ≤ 0.55 kW

Notes:

Chinese customs checks the need for certification of imported products by means of the commodity code.

The following do not need to be certified:

- Explosion-protected motors
- Multi-voltage motors
- Multi-speed motors with powers higher than those listed above
- Repair parts

UKCA – UK Conformity Assessed

The UKCA marking is the product marking used for products being placed on the market in Great Britain (England, Scotland and Wales). The UKCA marking applies to most products previously subject to the CE marking and it's mandatory for products which are placed on the market after 31st of December 2022. All 1LE motors have the UKCA marking as standard.

VIK version

VIK = German Association of the Energy and Power Supply Industry

- **VIK standard version** – 1LE1, 1LE5 + order code **C02**
  "VIK" identification on rating plate.
  ➔ Product range in Catalog Section 2.
- **VIK-Ex ec version** – 1MB1.3, 1MB5.3 + order code **C02**
  "VIK" and "Ex ec IIC T3 Gc" marking on the rating plate according to Directive 2014/34/EU (ATEX).
  ➔ Product range in catalog section 5.

Both versions include technology as for Zone 2 with type of protection Ex ec IIC T3 Gc.

Design features for VIK version:

- Rating plate made of stainless steel
- Fan cover made of sheet steel
- Vertical motors with protective cover (order code **H00** must be ordered)
- Terminal box for direct cable connection (as 1MB... series) and with silicone seal
- Certified connection system in the terminal box
- Terminal box with certified sealing plugs
- External grounding
- Painting according to corrosivity category C3
- Second rating plate supplied loose

Minimum efficiency class:

- VIK standard version:
  IE3 orIE4 in accordance with legal specifications.
- VIK-Ex ec version:
  IE3 in accordance with legal specifications.

Notes:

- For use in potentially explosive areas (e.g. zone 2), the motor must be marked accordingly (e.g. Ex ec).
- The modular equipment (brake, encoder, forced ventilation) of a normal motor (e.g. 1LE...) does not meet the requirements for use in potentially explosive areas.
- Before using 1LE. motors in VIK version in Zone 2, a rating plate with type of protection and valid certificate number must be attached to the motor.

© Innomotics 2024

Introduction

Versions in accordance with standards and specifications

Overview

TR CU product safety certificate EAC for the Eurasian Customs Union (Kazakhstan, Armenia, Kyrgyzstan without Russia and Belarus)

TR CU = Technical Regulation Customs Union
EAC = Eurasian Conformity

The TR CU product safety certificate is required in order to import motors into the Eurasian Customs Union area.

"TR CU product safety certificate EAC for Eurasian Customs Union" – order code **D47**

When motors are ordered with order code **D47**, the motor rating plate and packaging are marked with the logo "EAC".

The motor must have a "TR CU product safety certificate EAC", although the certificate does not generally have to be shipped with the motor. The customs authorities use the motor article number to check the motor certification.

The following are available in SPC configurator.innomotics.com

- TR CU product safety certificate in accordance with the Low-Voltage Directive
- Additional TR CU product certificate in accordance with the EMC Directive.

Train-compatible version

When ordering with order codes **L91** or **L92**, order code **B02** included.

Train-compatible version IC418, EN IEC 60349, acc. to EN 45545, without external fan and fan cover

(1LE10 aluminum motors in frame sizes 80 to 200) –
Order code **L92** for cooling method IC418

- Electrical design in accordance with EN IEC 60349; $U_{rated} \leq 500$ V AC.
- DC-link voltage: $U_{dc} \leq 700$ V; $du/dt \leq 5$ kV/µs
- Vibration resistance to Class 3M4 according to IEC 60721-3-3
- Metal cable gland
- Including external grounding depending on construction type (corresponds to order code **H04**).
- Standard paint finish certified according to EN 45545
  maximum coat thickness:
  primer coat 80 µm
  top coat 80 µm
- Polyurethane-based paint, order code **S06**
  maximum coat thickness:
  primer coat 90 µm
  top coat 140 µm

Train-compatible version IC411, EN IEC 60349, with EN 45545, with external fan and fan cover in metal – order code **L91** for cooling method IC411

- 1LE10 aluminum motors in frame sizes 80 to 200
- Electrical design in accordance with EN IEC 60349; $U_{rated} \leq 500$ V AC.
- DC-link voltage: $U_{dc} \leq 700$ V; $du/dt \leq 5$ kV/µs
- Vibration resistance to Class 3M4 according to IEC 60721-3-3
- Metal cable gland
- Including external grounding depending on construction type (corresponds to order code **H04**).
- Standard paint finish certified according to EN 45545
  maximum coat thickness:
  primer coat 80 µm
  top coat 80 µm
- (Polyurethane-based paint, order code **S06**
  maximum coat thickness:
  primer coat 90 µm
  top coat 140 µm
- Including metal fan cover

Recommended supplementary options:

- Located bearing DE (order code **L20**)
- Temperature class 155 (F), utilized according to 130 (B), coolant temperature 55 C, derating approx. 13 % (order code **N07**)
- Coolant temperature −30 to +40 °C (order code **D04**)
- Coolant temperature −40 to +40 °C (order code **D03**)

© Innomotics 2024

Overview

Innomotics XP CHEMSTAR & Innomotics SD CHEMSTAR -
The industry-specific motor solution for the Chemical, Petrochemical, and Oil & Gas sectors

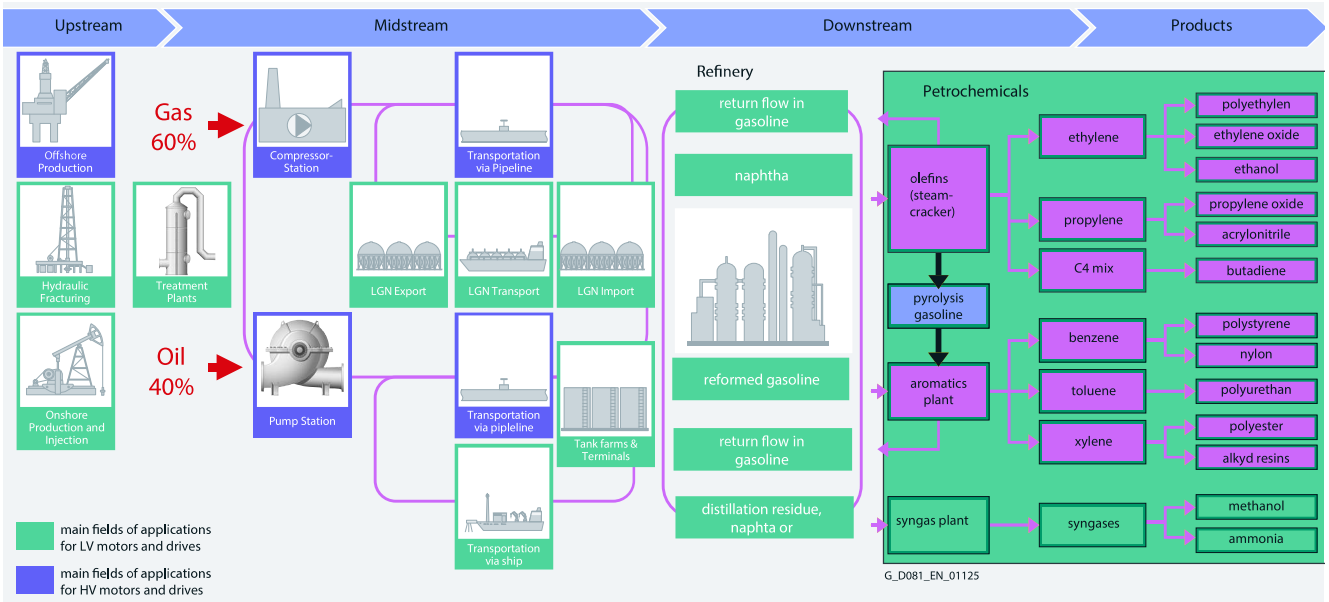

The proven industry-specific CHEMSTAR range has been setting standards for decades in terms of motor technology for the extreme operating conditions prevailing in the chemical industry as well as in the plants producing, transporting and processing oil and gas raw materials. The combination of these many years of experience and expertise on the one hand and the technology of the Innomotics motor platform on the other ensures maximum reliability, safety, high efficiency and simple project handling in these industries.

In the often complex processes and procedures of the chemical industry, many, though not all plant components are subject to explosion hazards due to flammable gases, liquids and dusts. The motor used must therefore function permanently and smoothly, even in chemically aggressive atmospheres.

The situation is similar in the application fields of the Oil & Gas sector. These are characterized by extreme demands placed on the drive technology used. This applies not only to the high explosion risk inherent in both commodities, but also to the place of deployment, whether it be offshore on the high seas, in the Arctic or in the Arabian desert.

With this in mind, we offer the explosion-protected Innomotics XP and Innomotics SD motors for harsh environments without the risk of explosion in the CHEMSTAR version. And this again in two industry-specific variants: One variant for the chemical industry and one for the Oil & Gas sector. The CHEMSTAR basic features are combined with chemical-specific or oil & gas-specific additional features

In the case of the "CHEMSTAR for Chemical Industry" variant, this ensures that the motor is precisely tailored to the specific ambient conditions of this industry, thus ensuring maximum reliability and safety in chemical processes.

With the "CHEMSTAR for Oil & Gas" version, the basic and additional features are combined in such a way that the motors ensure maximum safety and plant availability while simultaneously reducing lifecycle costs, even under the extreme conditions of oil and gas production and transport.

© Innomotics 2024

Introduction

Versions in accordance with standards and specifications

Overview

Innomotics motors for oil and gas applications in CHEMSTAR design meet the new standard of the IOGP specification.

International Association of Oil & Gas Producers

The following overview shows the basic features and the industry-specific features of the two variants.

Variant	Chemicle industry	Oil & gas
Sector options	C03	C04
	Options included in the package	
Paint system	C4 Special paint system "sea air resistant"	C2 Standard paint system Optionally special paint system up to category CX offshore
Plate material	Plates made of stainless steel QR code plate made of stainless steel	
Screws	Standard version	Stainless steel screws
Fan cover	Fan cover made of sheet steel	
Grounding	External grounding	
Housing	IP66 Increased air humidity 40-60 g per m^3 of air[1]	
Condensation drainage holes	Sealed [2]	
Bearings	Bearings reinforced at both ends for DE and NDE, bearing size 63 from frame size 100	
Warranty	36 months from delivery	
Inspection certificate	Inspection certificate 3.1	
Included standard	VIK version	–
	Recommended options	
Documentation	Documentation package "Advanced"	Documentation package "Projects"
Additional rating plate	Additional rating plate with customer specifications	

[1] C04 in conjunction with corrosivity category C3 or higher
[2] Ex db motors without drainage holes

© Innomotics 2024

Overview

Voltages, currents and frequencies

Standard voltages

EN 60034-1 differentiates between Category A (combination of voltage deviation ±5 % and frequency deviation ±2 %) and Category B (combination of voltage deviation ±10 % and frequency deviation +4/−6 %) for voltage and frequency fluctuations. The motors can supply their rated torque in both Category A and Category B. In Category A, the temperature rise is approx. 10 K higher than during rated operation.

Standard IEC 60034-1	Category A	Category B
Voltage deviation Frequency deviation	±5 % ±2 %	±10 % +4 %/−6 %
Rating plate data stamped with rated voltage a (e.g. a=400 V)	a ±5 % (e.g. 400 V ±5 %)	a ±10 % (e.g. 400 ±10 %)
Rating plate data stamped with rated voltage ranges b to c (e.g. b=380 V to c=420 V)	b −5 % to c +5 % (e.g. 380 −5 % to 420 +5 %)	b −10 % to c +10 % (e.g. 380 −10 % to 420 +10 %)

For further details, see EN 60034-1.

According to the standard, longer operation is not recommended for Category B. See "Rating plates and additional rating plates" for details of the rating plate inscriptions and corresponding examples. The selection and ordering data give the rated current at 460 V, 60 Hz. The IEC 60038 standard specifies a tolerance of ±10 % for line voltages of 230 V, 400 V, and 690 V.

Line voltages	Voltage code
1LE1 motors	
230 VΔ/400 VY, 50 Hz 460 VY, 60 Hz	22
400 VΔ/690 VY, 50 Hz 460 VΔ, 60 Hz	34
500 VY, 50 Hz 575 VY, 60 Hz	27
500 VΔ, 50 Hz 575 VΔΔ 60 Hz	40

Non-standard voltages and/or frequencies

The tolerance laid down by EN 60034-1 applies to all non-standard voltages.
For some non-standard voltages at 50 or 60 Hz, order codes are specified. They are ordered by specifying the code digit **9** for voltage in the 12th position of the Article No. as well as the code digit **0** in the 13th position of the Article No. and the corresponding order code.

The lowest rated voltage for **M1Y** that can be delivered depends on factors including the circuit (delta connection 200 V/star (wye) connection 250 V) and frame size. The defined order codes for further rated voltages provide an indication of the lowest rated voltage for **M1Y**.

Order codes for other rated voltages are listed under "Order suffixes" in the "Selection and ordering data" as well as "Special versions" under "Voltages".

Line voltages according to NEMA

Assignment of rated voltage of the motor to that of the line:

Line voltage	Motor voltage
208 V	200 V
240 V	230 V
480 V	460 V
600 V	575 V

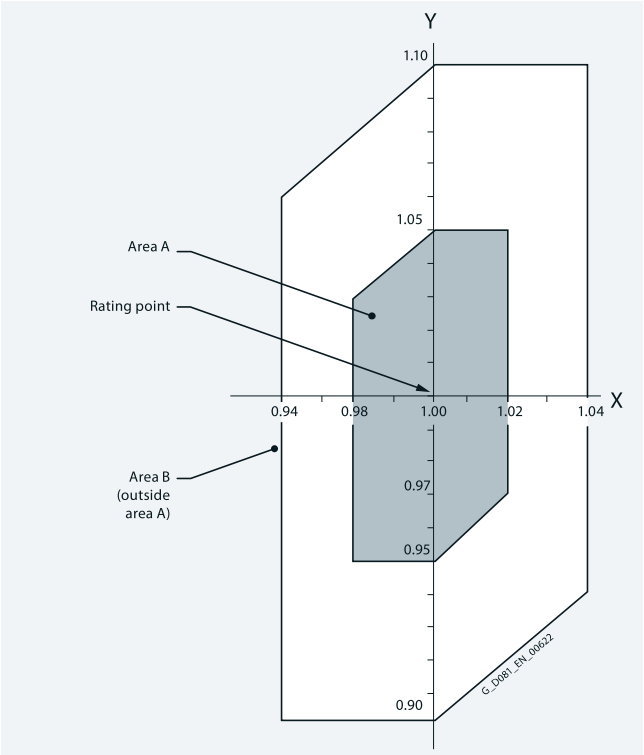

Y-axis: Voltage tolerance
X-axis: Frequency tolerance

Powers

The powers or rated powers are listed in the selection tables for both 50 Hz and 60 Hz. For 60 Hz, the rated power values must, in some cases, be increased, e.g. for pole-changing motors.

Assignment of standard powers kW-hp in accordance with IEC 60072-1

The values specified for kW and hp are not precise conversion values. They are the approximate relationship between the values generally applied in the countries in which both units are used.

P_{rated} kW	P_{rated} hp	P_{rated} kW	P_{rated} hp	P_{rated} kW	P_{rated} hp	P_{rated} kW	P_{rated} hp	P_{rated} kW	P_{rated} hp	P_{rated} kW	P_{rated} hp
0.06	0.08	2.2	3	37	50	200	270	450	603	800	1072
0.09	0.12	3	3.7	45	60	220	300	475	637	850	1139
0.12	0.16	4	5	55	75	250	350	500	670	900	1206
0.18	0.25	5.5	7.5	75	100	280	375	530	710	950	1273
0.25	0.33	7.5	10	90	125	300	402	560	750	1000	1340
0.37	0.5	11	15	110	150	315	422	600	804		
0.55	0.75	15	20	132	175	335	476	630	845		
0.75	1	18.5	25	150	200	375	503	670	898		
1.1	1.5	22	30	160	220	400	536	710	952		
1.5	2	30	40	185	250	425	570	750	1005		

© Innomotics 2024

Introduction

Rating plate and additional rating plates

Overview

In accordance with EN 60034-1, the approximate total weight is specified on the rating plate for all motors.

1

Supplementary data (maximum of 20 characters) can be indicated on the rating plate or additional rating plate and on the packaging label.
Order code **Y84**

An additional rating plate for customer specifications is also possible, additional text: 9 lines of 40 characters each.
Order code **Y82**

An adhesive label can also be supplied loose.
Order code **Y85**

An additional rating plate for customer specifications is also possible, additional text: 9 lines of 40 characters each.
Order code **Y82**

An additional rating plate with deviating rating plate data can also be ordered (only for ratings such as voltage, power, speed).
Order code **Y80**.

An "additional rating plate for voltage tolerance" can also be ordered.
Can be ordered for 230 V∆/400 VY or 400 V∆/690 VY (voltage code "22" or "34"). Not possible for pole-changing motors, naturally cooled 1PC1 motors, 8-pole motors and in combination with order code **D34**.
Order code **B07**
(voltage range plate is always provided in the form of an adhesive label)

The number of rating plates and/or the material quality of the rating plate including additional rating plates can be ordered using order codes **Y82**, **Y84** and **Y80**. Does not apply to order code **B07**, rotational direction arrows, PTC thermistor plates, other notices.

- Extra (rating) plate(s) –
  Order code **M10**
  As adhesive label for frame sizes 80 and 90.
- Plate(s) with resistance to scratches, heat, cold and acid –
  Order code **M11**

As standard, the normal version of the rating plate is international (in English).

Other languages on request.

Examples of rating plates

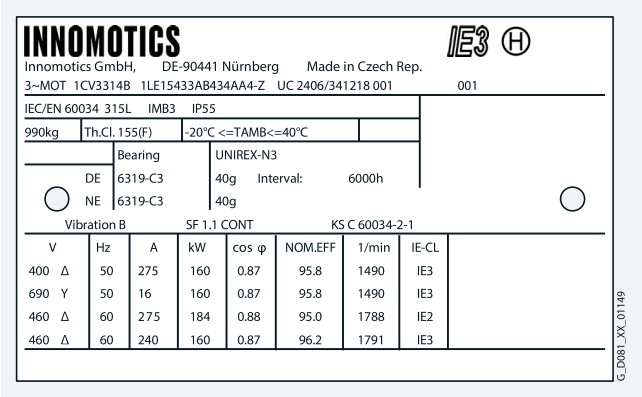

Rating plate for motor with KEA certification

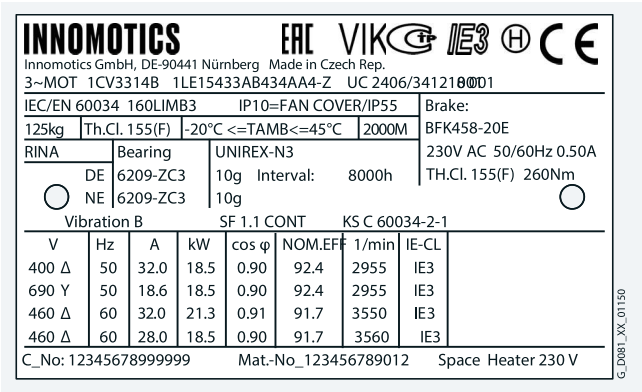

Rating plate (metal) for IEC motors (APAC Line) – maximum characteristics

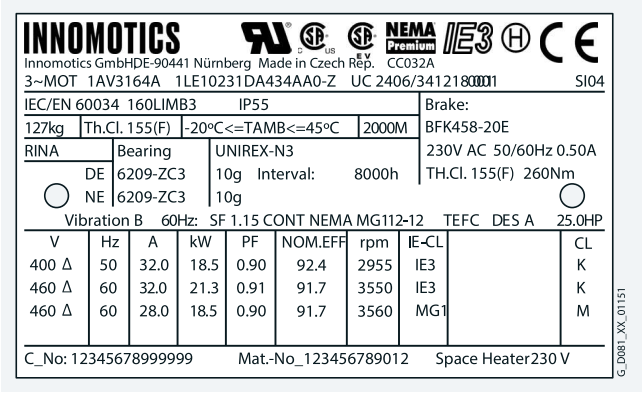

Standard rating plate (metal) for NEMA motors – maximum characteristics

© Innomotics 2024

Overview

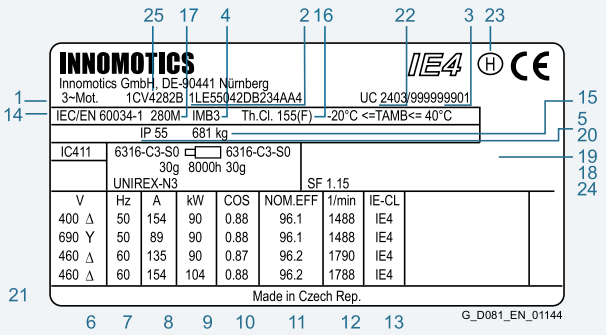

1 Type of machine AC low-voltage motor
2 Article No.
3 Factor number
4 Type of construction
5 Degree of protection
6 Rated voltage [V] and winding connections
7 Frequency [Hz]
8 Rated current [A]
9 Rated output [kW]
10 Power factor (cos φ)
11 Efficiency
12 Rated speed [rpm]
13 IE efficiency class
14 Standards and specifications
15 Weight of machine [kg]
16 Temperature class
17 Frame size
18 Supplementary data (optional)
19 Operating temperature range (only if it deviates from standard)
20 Installation altitude (only when higher than 1000 m)
21 Customer data (optional)
22 Date of manufacture YYMM
23 Half-key balancing
24 Code letter "CL"
25 Motor type number (MT)

Explanation of the standard rating plate

© Innomotics 2024

Introduction

Efficiency, power factor, rated power, direction of rotation, rated torque

Overview

Efficiency and power factor

The efficiency η for 4/4, 3/4 and 1/2 load and the power factor cos φ for each rated power are listed in the selection tables in the individual sections of this catalog.
See page 1/5 for minimum efficiencies.

Rated speed and direction of rotation

The rated speeds are applicable for the rated data.
The synchronous speed changes proportionally with the line frequency. The motors are suitable for clockwise and counterclockwise rotation.

When U1, V1, W1 are connected to L1, L2, L3 the motor rotates clockwise when viewing the drive shaft extension.
Counterclockwise rotation is achieved by swapping two phases (see also "Heating and ventilation" on page 1/37).

Rated torque

The rated torque T in Nm delivered at the motor shaft is

$$T = \frac{9.55 \cdot P \cdot 1000}{n}$$

P Rated power in kW
n Speed in rpm

Note:
If the voltage deviates from its rated value within the admissible limits, the locked-rotor torque, the pull-up torque and the breakdown torque vary with the approximate square of the value, but the locked-rotor current varies approximately linearly.

In the case of squirrel-cage motors, the locked-rotor torque and breakdown torque are listed in the selection tables as multiples of the rated torque.
Preferred practice is to start squirrel-cage motors directly on line. The torque class indicates that with direct-on-line starting, even if there is an undervoltage of -5 %, it is possible to start up the motor against a load torque of

- 160 % for CL 16
- 130 % for CL 13
- 100 % for CL 10
- 70 % for CL 7
- 50 % for CL 5

of the rated torque.

© Innomotics 2024

Overview

All motors in the Innomotics generation are equipped with innovative insulation systems, consisting of high-quality enamel wires and insulating sheet materials in conjunction with highly temperature-resistant impregnations.

The motors can be operated with SINAMICS G and SINAMICS S converters (controlled and uncontrolled infeed) while adhering to the admissible voltage peaks in accordance with the adjacent table.

Continuous operation while fully utilizing the admissible voltage tolerances must be avoided and is not recommended in accordance with IEC 60034-1 2011 Chapter 7.3.

The preferred supply system configurations are TT systems and TN systems with neutral-point grounding. We do not recommend operation in TN systems because of the higher voltage load.

Operation on non-grounded IT systems is also possible. However, in a ground fault, the insulation is excessively stressed. In the case of a ground fault, the process should be terminated as quickly as possible (t < 2 h), and the fault resolved.

For motors with protruding connection cables (order codes **R20, R21, R22, R23**, and **R24**), please inquire in the case of converter operation.

Impulse Voltage Insulation Class (IVIC) – category C (strong)

The insulation system of Innomotics motors significantly exceeds the requirements of stress category C (IVIC C = high stress). If voltage peaks higher than those specified according to IVIC C can occur, observe the data in the following table.

- For a line voltage (converter input voltage) up to 500 V and operation connected to a SINAMICS G/SINAMICS S converter with uncontrolled infeed (BLM, SLM), the relevant guidelines for the motor and converter configuration must be observed.
- For a line voltage (converter input voltage) up to max. 480 V and operation connected to a SINAMICS S converter with controlled infeed (ALM), the relevant guidelines for the motor and converter configuration must be observed.
- For line voltages (converter input voltages) higher than those stated above (max. 690 V), motors that are ordered for converter operation must have a suitable insulation system.
- For operation of a converter of another manufacturer, the permissible voltage peaks according to IEC 60034-18-41 in accordance with stress category C (see table below) must be observed, depending on the particular line voltage (converter input voltage) and the motor insulation system.

		Line voltage U_{rated}					
		400 V		480 V		500 V	
Standard		IVIC C	Inno-motics	IVIC C	Inno-motics	IVIC C	Inno-motics [1]
U_{phase} $U_{phase\text{-}to\text{-}ground}$	$V_{pk/pk}$	1664	2200	1997	2200	2080	2800
$\hat{U}_{phase\text{-}to\text{-}ground}$	V_{pk}	832	1100	999	1100	1040	1400
U_{phase} $U_{phase\text{-}to\text{-}phase}$	$V_{pk/pk}$	2377	3000	2852	3000	2971	3200
$\hat{U}_{phase\text{-}to\text{-}phase}$	V_{pk}	1189	1500	1426	1500	1486	1600

		Line voltage U_{rated}			
		500 V		690 V	
PREMIUM		IVIC C	Inno-motics	IVIV C	Inno-motics
U_{phase} $U_{phase\text{-}to\text{-}ground}$	$V_{pk/pk}$	2080	3000	2870	3000
$\hat{U}_{phase\text{-}to\text{-}ground}$	V_{pk}	1040	1500	1435	1500
U_{phase} $U_{phase\text{-}to\text{-}phase}$	$V_{pk/pk}$	2971	4400	4100	4400
$\hat{U}_{phase\text{-}to\text{-}phase}$	V_{pk}	1486	2200	2050	2200

Minimal to IEC60034-18 0.1 µs (0.3+/-0.2).

The voltages according to EN 60034-18-41/IVIC C are specified as peak-to-peak values ($V_{pk}/_{pk}$). For information, the conventional peak values (V_{pk}) are also stated.

Insulation systems for converter operation > 480 V/500 V

The Innomotics motors can be operated in their standard version on SINAMICS converters without an additional filter up to a maximum converter input voltage of 500 V 3 AC on uncontrolled infeeds (SINAMICS G/S/V, BLM/SLM) and up to 480 V 3 AC on controlled infeeds (SINAMICS S, ALM). The specific configuration guidelines for motors and converters must be observed.

For higher converter input voltages, > 480 V/500 V 3 AC (max. 690 V), a special insulation system of the motor (PREMIUM) is required.
This is available for converter motors, such as Innomotics GP/SD VSD10, Innomotics DP crane motors, Innomotics FD, and the converter-capable Innomotics SD Pro motors.

For IE3 standard motors, the PREMIUM insulation system is available depending on the type.

[1] Only for motors with voltage code 27 or 40.

© Innomotics 2024

Overview

Bearing insulation/shaft grounding brushes

To avoid damage to bearings due to bearing currents, we recommend bearing insulation at the non-drive end (NDE) for frame size 225 and larger (order code **L51**).

For converter operation and for frame size 315 and larger, bearing insulation at the non-drive end (NDE) is always provided (order code **L51**).

When rotary encoders are used, it must be ensured that these do not bypass the bearing insulation. The rotary encoders in this catalog meet this requirement except for type 1XP8.

In most cases, NDE bearing insulation provides sufficient protection against damage to bearings due to bearing currents.

In rare cases, depending on the application and system, it may be necessary to take further measures on the converter or motor. On the motor side, bearing insulation is provided on the drive end (DE) (order code **L50** on frame size 225 and larger) and shaft grounding brushes (order code **L52** as of frame size 280).

When NDE bearing insulation is used together with DE bearing insulation, the "shaft grounding brush" option (order code **L52**) must also be selected to maintain the shaft at a defined potential. In this constellation, to avoid damage to the bearings of the driven machine due to bearing currents, it is also necessary to insulate the coupling between the motor and the driven machine.

When DE or NDE bearing insulation (order codes **L50** or **L51**) is used together with shaft grounding brushes (order code **L52**), care must be taken - to avoid damage to the bearings of the driven machine - that the shaft grounding brushes are **not** mounted on the same side as the insulated bearing.

The EMC guidelines must always be complied with when the drive system is installed.

Thermal utilization of the motor

When motors are operated on a converter, additional losses occur due to the harmonics in the motor currents, which, depending on the permissible winding temperature, can make it necessary to reduce the torque. For operation on SINAMICS converters, the permissible torque values can be obtained from the SIZER engineering tool.

For operation on SINAMICS converters with the power ratings specified in the catalog, the motors are used according to temperature class 155 (F), i.e. in this case neither a service factor > 1 nor an increased coolant temperature is possible (order codes **N01**, **N02** and **N03** cannot be ordered).

© Innomotics 2024

Overview

Explosion-protected motors

For converter operation of Ex motors, special measures must be considered, see Chapter 5.

DURIGNIT IR 2000 insulation system

The DURIGNIT IR 2000 insulation system consists of high-quality enamel wires and insulating sheet materials in conjunction with temperature-resistant resin impregnation. This ensures that these motors will have a high mechanical and electrical strength, high service value, and a long lifetime. The insulation system protects the winding to a large degree against aggressive gases, vapors, dusts, oils and increased air humidity. It can withstand the usual vibration stressing. The insulation is suitable up to an absolute air humidity of 30 g water per m^3 of air. Moisture condensation should be prevented from forming on the winding. For higher values, the **N30** and **N31** options are available – see page 1/35.

Please inquire about extreme applications.

Restarting against residual field and opposite phase

All motors can be restarted against 100 % residual field after a line voltage failure.

Winding and insulation version with regard to temperature class

At rated power in line operation, the 1LE5/1MB5 motor series can be utilized in the following temperature class:

- For Innomotics SD Add [1]: Temperature class 130 (B)
- For Innomotics XP [1]: Temperature class 130 (B)
- For Innomotics SD Pro and Innomotics XP 1MB58: Temperature class 155 (F)

All motors are designed with temperature class 155 (F). For details of derating for utilization in temperature class 155 (F), see "DURIGNIT IR 2000 insulation system".

Temperature class 155 (F), utilized according to 155 (F), with service factor (SF)

According to the selection table, at rated power and rated voltage, all 1LE./1PC1 motors in line operation have a service factor of 1.15. An exception are IE1 motors, which have a service factor of 1.1.
For the line operation, all motors with frame sizes 400 and 450 have a service factor of 1.05 at rated power.
Order code **N01**

Temperature class 155 (F), utilized according to 155 (F), for higher power

When utilized according to temperature class 155 (F), the rated power specified in the selection and ordering data can be increased by 15 %. Exception for IE1 motors – can be increased by 10 %. For motors of frame sizes 400 and 450, for line operation, when utilized according to temperature class 155 (F), the rated power listed in the selection and ordering data can be increased by 5 %. In this case, the service factor is 1.0.
Order code **N02**

Temperature class 155 (F), utilized acc. to 155 (F), with increased coolant temperature

With power as defined in the catalog and line operation, the coolant temperature is permitted to rise to 55 °C and, for motors of frame sizes 400 and 450, to 45 °C.

In this case, the service factor is 1.0.
Order code **N03**

The service factor (SF) is not indicated on the rating plate for order codes **N02** and **N03**.
For converter operation at the power specified in the catalog, the motors are utilized according to temperature class 155 (F). Order codes **N01**, **N02**, and **N03** are not possible.

Temperature class 155 (F), utilized acc. to 130 (B), coolant temperature 45 °C, derating approx. 4 %

For motor series 1LE1, 1MB. [1], Innomotics SD Add [1], a version can be ordered according to temperature class 155 (F) for utilization according to temperature class 130 (B) and a maximum coolant temperature of 45 °C with derating of 4 %.
Order code **N05**

Temperature class 155 (F), utilized acc. to 130 (B), coolant temperature 50 °C, derating approx. 8 %

For motor series 1LE1, 1MB. [1], Innomotics SD Add [1] a version can be ordered according to temperature class 155 (F) for utilization according to temperature class 130 (B) and a maximum coolant temperature of 50 °C with derating of 8 %.
Order code **N06**

Temperature class 155 (F), utilized acc. to 130 (B), coolant temperature 55 °C, derating approx. 13 %

For motor series 1LE1, 1MB. [1], Innomotics SD Add [1] a version can be ordered according to temperature class 155 (F) for utilization according to temperature class 130 (B) and a maximum coolant temperature of 55 °C with derating of 13 %.
Order code **N07**

Temperature class 155 (F), utilized acc. to 130 (B), coolant temperature 60 °C, derating approx. 18 %

For motor series 1LE1, 1MB. [1], Innomotics SD Add [1] a version can be ordered according to temperature class 155 (F) for utilization according to temperature class 130 (B) and a maximum coolant temperature of 60 °C with derating of 18 %.
Order code **N08**

Temperature class 180 (H)

Order code **N10** [2]

Order code **N10** provides an insulation system correspnding to temperature class 180 (H).

Order code **N10** does not change power and utilization of motor.

[1] Not applicable for 8-pole motors, frame size 450. Utilization in accordance with temperature class 130 (B) only possible on request, specifying order code **Y50**.

[2] Order code for Ex motors of the 1MB5, Innomotics XP motor series not available.

© Innomotics 2024

Windings and insulation

Overview

Temperature class 180 (H) at rated power and max. CT 60 °C

Order code **N11**

Orde code **N11** provides an insulation system corresponding to the temperature class 180 (H) for a coolant temperature of 60 °C with rated power.

Utilization according to temperature class can be changed.

For motors of frame sizes 225 to 355, utilization according to H/H is not permissible due to the bearing temperature rise.

In this case, the service factor is 1.0.

The grease lifetime specified is valid for a coolant temperature of 40 °C. If the coolant temperature is increased by 10 K, the grease lifetime and regreasing interval are halved.

Temperature class 155 (F), utilized acc. to 130 (B), with higher coolant temperature and/or installation altitude

The motors can be ordered according to temperature class 155 (F) for utilization according to temperature class 130 (B) with other customized requirements if they are specified in plain text in the order.
Order code **Y50**

Temperature class 155 (F), utilized according to 155 (F), other requirements

The motors can be ordered according to temperature class 155 (F) for utilization according to temperature class 155 (F) with other customized requirements if they are specified in plain text in the order.
Order code **Y52**

Temperature class 180 (H), utilized according to 155 (F)

The motors can be ordered according to temperature class 180 (H) for utilization according to temperature class 155 (F) with other customized requirements if they are specified in plain text in the order.
Order code **Y75** [1)]

Increased air humidity/temperature with 30 to 60 g water per m³ of air

With motor series 1LE1, 1LE5, 1MB1, 1MB5 and 1PC1, motors are available in a version designed for increased air humidity in the range of 30 to 60 g water per m^3 of air, depending on the temperature, as shown in the table below. This version has condensation drainage holes (sealed). Not possible for 1MB..5 Ex db motors.
Order code **N30** (includes order code **H03** [2)], **M11**, stainless bolts in the terminal box cover, and **S02** standard/special paint finish for Performance Line cast-iron motors).
Please inquire before combining order code **N30** with mountings (e.g. rotary pulse encoder, brakes)!

Increased air humidity/temperature with over 60 to 100 g water per m³ air

With motor series 1LE1, 1LE5, 1MB1, 1MB5 and 1PC1, motors are available in a version designed for increased air humidity of over 60 to 100 g water per m^3 of air, depending on the temperature, as shown in the table below. This version has condensation drainage holes. Not possible for 1MB...5 Ex db motors.
Order code **N31** (includes order code **H03** [2)], **M11**, stainless bolts in the terminal box cover, and either the **S02** special paint finish or the **S03** "sea air resistant" special paint finish for Performance Line cast-iron motors).
Please inquire before combining order code **N31** with mountings (e.g. rotary pulse encoder, brakes)!

[1)] Order code for Ex motors of the 1MB5, Innomotics XP motor series not available.

[2)] Order code for Ex motors of the 1MB.553, Innomotics XP motor series not available.

© Innomotics 2024

Overview

Absolute/relative conversion of air humidity

Relative humidity	Temperature							
	up to 20 °C	up to 30 °C	up to 40 °C	up to 50 °C	up to 60 °C	up to 70 °C	up to 80 °C	up to 90 °C
10 %	2	3	5	8	13	20	29	42
15 %	3	5	8	12	19	30	44	63
20 %	3	6	10	17	26	39	58	84
25 %	4	8	13	21	32	49	73	105
30 %	5	9	15	25	39	59	87	126
35 %	6	11	18	29	45	69	102	146
40 %	7	12	20	33	52	79	116	167
45 %	8	14	23	37	58	89	131	188
50 %	9	15	26	41	65	98	145	209
55 %	10	17	28	46	71	108	160	230
60 %	10	19	31	50	78	118	174	251
65 %	11	20	33	54	84	128	189	272
70 %	12	21	36	58	91	138	203	293
75 %	13	23	38	62	97	148	218	314
80 %	14	24	41	66	104	157	233	335
85 %	15	26	43	70	110	167	247	356
90 %	16	27	46	74	117	177	262	377
95 %	16	29	49	79	123	187	276	398
100 %	17	30	51	83	130	197	291	419

The values in the table with a light gray background are covered by the standard version (up to < 30 g water per m^3 of air).

The values in the table with a medium gray background are covered by order code **N30** (30 to < 60 g of water per m^3 of air).

The values in the table with a dark gray background are covered by order code **N31** (60 to < 100 g of water per m^3 of air).

Note:

- The coolant temperature and installation altitude can be found from page 1/36 onwards!
- The sheet metal fan cover is available in combination with order code **F74** (not standard).
  For details of order code **F74** – see page 1/38
- In case of increased thermal stress, please combine with the order codes **N05** to **N08**.
- In conjunction with more stringent requirements for the paint finish or corrosion protection stress (offshore, sea air, etc.), the corresponding order codes **S02, S03, S04**, and potentially **H07**, must be combined!
- Order code **N31** requires additional specifications for the ambient temperature CT 50 °C to CT 90 °C.

© Innomotics 2024

Coolant temperature and installation altitude

Overview

The specified rated power is applicable for continuous duty in accordance with IEC 60034-1 at the frequency of 50 Hz, a coolant temperature (CT) or ambient temperature of 40 °C and an installation altitude (IA) up to 1000 m above sea level. 1LE1, 1LE5, 1MB1, 1MB5 and 1PC1 motors for ambient temperatures exceeding 40 °C are equipped with various types of seal. Mountings such as brake, terminal box at NDE, flange-mounted motors can sometimes exceed utilization in accordance with temperature class 130 (B).

For higher coolant temperatures and/or installation altitudes greater than 1000 m above sea level, the specified motor power must be reduced using the factor k_{HT}.

Depending on the frame size of the motor or the number of poles, special windings may be added to the motors for the different operating conditions.

This results in an admissible motor power of:

$P_{adm} = P_{rated} \cdot k_{HT}$

If the admissible motor power is no longer adequate for the drive, it should be checked whether the motor with the next highest rated power fulfills the requirements.

Abbreviation	Description	Unit
P_{adm}	Admissible motor power	kW
P_{rated}	Rated power	kW
k_{HT}	Factor for abnormal coolant temperature and/or installation altitude	

The motors are designed for temperature class 155 (F) and utilized in temperature class 130 (B). Under non-standard operating conditions, if they are to be used in this class, the admissible power rating must be determined from the table below.

Reduction factor k_{HT} for different installation altitudes and/or coolant temperatures

Installation altitude **above sea level**	Coolant temperature					
m	< 30 °C	30 ... 40 °C	45 °C	50 °C	55 °C	60 °C
1000	1.07	1.00	0.96	0.92	0.87	0.82
1500	1.04	0.97	0.93	0.89	0.84	0.79
2000	1.00	0.94	0.90	0.86	0.82	0.77
2500	0.96	0.90	0.86	0.83	0.78	0.74
3000	0.92	0.86	0.82	0.79	0.75	0.70
3500	0.88	0.82	0.79	0.75	0.71	0.67
4000	0.82	0.77	0.74	0.71	0.67	0.63

Coolant temperature and installation altitude are rounded to 5 °C and 500 m respectively.

Motors for coolant temperatures other than 40 °C or installation altitudes higher than 1000 m above sea level for utilization in temperature class 130 (B) must always be ordered with the additional identification code "**–Z**" and plain text. In the case of extreme derating, the operating data for the motors, i.e. efficiency and power factor, will also be less favorable due to partial utilization.

The following special versions are possible for 1LE1 and 1PC1 motors:

- Motors for coolant temperatures from –40 to +40 °C order code **D03**
- Motors for coolant temperatures from –30 to +40 °C order code **D04**

When ordering with order codes **D03** or **D04** in combination with mountings, the respective technical specifications have to be observed and it is necessary to inquire.

For details of order codes for use in temperature class 155 (F), see "DURIGNIT IR 2000 insulation system" under "Windings and insulation" on page 1/33.

Ambient temperature:
All motors can be used in the standard version at ambient temperatures between –20 and +40 °C. Exposure to direct sunlight can result in uncontrollable rises in motor temperature. To prevent this, appropriate shading measures such as a sun-protective cover are recommended.
Motors can be utilized in temperature class 155 (F)

- at 40 °C with service factor 1.1, i.e. the motor can be continuously overloaded with 10 % of the rated power in the case of IE1 motors
- at 40 °C with service factor 1.15, i.e. the motor can be continuously overloaded with 15 % of the rated power in the case of IE2 motors and higher efficiency classes
- above 40 °C at rated power.
- 1LE5 motors are used in accordance with temperature class 155 (F) up to 40 °C occurs with a service factor of 1.05, i.e. the motor can be continuously overloaded with 5 % of the rated power.

When motors are used in temperature class 130 (B) for higher ambient temperatures and/or installation altitudes, derating occurs in accordance with the Table "Reduction factor k_{HT} for different installation altitudes and/or coolant temperatures".
For motors ex stock, the service factor is indicated on the rating plate.
For other temperatures, special measures are necessary.
When brakes are to be mounted on motors intended for operation at temperatures below freezing, please inquire.

© Innomotics 2024

Overview

Anti-condensation heating

Supply voltage 230 V (1AC)
Order code **Q02**

Supply voltage 115 V (1AC)
Order code **Q03**

Supply voltage 400 V (1AC)
Order code **Q06**

For motors with windings at risk of condensation due to the climatic conditions, e.g. inactive motors in humid atmospheres or motors that are subjected to widely fluctuating temperatures, anti-condensation heaters must be used.
An additional cable entry is provided for the connecting cable in the terminal box.

Motor series	Frame size	Cable entry
Aluminum motors (GP; XP)	≤ 200	1 × M16 × 1.5
Cast-iron motors (SD; XP)	≤ 180	1 × M16 × 1.5
	200	1 × M20 × 1.5
	225 ... 315	2 × M20 × 1.5
	355 ... 450	2 × M20 × 1.5

Anti-condensation heating must not be switched on during operation.

Frame size	Heat power of the anti-condensation heating		
	Supply voltage at		
	230 V	115 V (110 V)	400 V (1AC)
	Order code **Q02**	Order code **Q03**	Order code **Q06**
	W	W	W
1LE1/1LE5/1PC1 motors			
63 ... 80	12.5	12.5	–
90 ... 112	25	25	–
132 ... 200	50	50	–
225 ... 250	92	92	–
280 ... 315	109	109	–
315 ... 355	218	218	200
400 ... 450	240	240	370
1MB1, 1MB5 motors			
80 ... 112	7	7	–
132 ... 160	12	12	–
180 ... 200	57	57	–
225 ... 250	92	92	–
280 ... 315	109	109	–
355	218	218	200
400 ... 450	240	240	370

Instead of an anti-condensation heater, another possibility is to connect a voltage that is approximately 4 to 10 % of the rated motor voltage to stator terminals U1 and V1; 20 to 30 % of rated motor current is sufficient to heat the motor.

Fans/separately driven fans

1LE1 and 1MB1 motors of frame size 71 to 315 and 1LE5 and 1MB5 motors with 4 poles or more have radial-flow fans in the standard version (with the exception of order code **F90** – version "Forced-air cooled motors without external fan and fan cover") that cool regardless of the direction of rotation of the motor (cooling method IC411 acc. to EN 60034-6). In the standard version, 1LE5 motors with 2 poles are cooled with unidirectional axial-flow fans. The air flow is forced from the non-drive-end (NDE) to the drive end (DE).

For details of separately driven fans for frame size 63 to 450, see also "Separately driven fans" on page 1/95.

Supply voltage of separately driven fan for 1LE1 motors:
The supply voltage tolerance of the separately driven fan is ±5 %. For voltage ranges, see page 1/95.

In confined spaces, it must be ensured that the minimum spacing is maintained between the fan cover and the wall. This also applies to adjacent parts, such as large handwheels and flywheels on the second shaft extension.

Clearance from wall/fan grilles	
Frame size	mm
63, 71	15
80, 90, 100	20
112	25
132	30
160	40
180, 200	90
225, 250	100
280, 315	110
355	140
400 ... 450	150

For version of the fan and the fan cover, see the table below.

Motor-series	Frame size	11th position of the Article No.:	Version	Fan material	Fan cover material
1LE10	63 ... 71	alle		Plastic	Metal
	80 ... 200				Plastic [1]
1LE15	71 ... 90		Basic Line	Plastic	Metal
	100 ... 315				Plastic
1LE16	100 ... 315		Performance Line	Plastic	Metal
1LE55	225 ... 280	alle	Basic Line	Plastic	Plastic
	315 Standard power	0, 2, 4, 5, 6 [1]	Basic Line	Plastic	Plastic
	315 Extended power	6, 7, 8	Basic Line	Metal	
			Performance Line		Metal
	355 Extended power		Basic Line		
			Performance Line		
1LE55	400 ... 450 2-polig	only for 2-pole		Metal	Metal
	400 ... 450 4-... 8-polig	only for 4- ... 8-pole		Plastic	
1LE56	315 ... 355			Metal	Metal

[1] For the frame size codes **A**, **D**, **F**, **H**, **J**, **K**, **L**, **N**, **T**, **U**, and **V**, a screwed-on cover (plastic or metal) is used in conjunction with the order code **H03** (condensation drainage holes). Mounted separately driven fans or brakes are only available in sheet metal version.

© Innomotics 2024

Overview

Metal external fan impeller

The standard fan impeller made of plastic can be replaced with a fan impeller made of metal. This version is available for the motors (with the exception of 1LE1 with order code **F90** – version "Forced-air cooled motors without external fan and fan cover").
In versions with a unidirectional axial-flow fan, the metal external fan is already included. Up to frame size 160 and for the 1LE5/1MB5 motor series, the metal external fan impeller is made of aluminum.
Order code **F76**

Fan cover for textile industry

For 1LE1 motors (with the exception of 1LE1 with order code **F90** – version "Forced-air cooled motors without external fan and fan cover") the standard version of the fan cover cannot be used in the textile industry.
For the motor series 1LE1 (with the exception of 1LE1 with order code **F90** – version "Forced-air cooled motors without external fan and fan cover") a special version of the fan cover is available for the textile industry. This has a protective cover and is made of non-corrosive sheet steel. The motor length increases when the fan cover for the textile industry is mounted, see page 1/134, Figure 12.
Order code **F75**.
The special requirements of the textile industry regarding the sheet metal cover open up the possibility that a finger may be inserted between the cover and housing. The customer must implement appropriate measures to ensure that the installed system is "finger-safe".

Sheet metal fan cover

In place of the plastic fan cover, a sheet metal fan cover can be ordered for motor series 1LE1 and 1LE5 (not in combination with order code **F90** – version "Forced-air cooled motors without external fan and fan cover").
Order code **F74**

The sheet metal fan cover is supplied as standard for

- Cast-iron series Performance Line (1LE16, 1LE56, 1LE55 with order code **C06**)
- Cast-iron series 1LE5 frame size 355, 400 and 450
- Exposion-protected 1MB1 and 1MB5 motors

Necessary minimum cooling air flow for forced-air cooled motors in standard duty

The cooling air flow specified in the selection table applies to continuous duty according to EN 60034-1 at a coolant temperature (CT) or ambient temperature of 40 °C respectively and an installation altitude (IA) up to 1000 m above sea level.

In the 1LE1/1LE5 motor version without external fan and fan cover, order code **F90**, the motor is located in the air flow of the driven fan that must drive the minimum cooling air flow over the motor housing. The minimum air flow must pass closely over the housing (comparable to self-ventilation of the motor). Otherwise higher air flows are required to comply with admissible motor heating levels.

© Innomotics 2024

Overview

1LE1 motors

Frame size	Required cooling air flow for number of poles									
	2		4				6		8	
	IE2									
	50 Hz	60 Hz	50 Hz		60 Hz		50 Hz	60 Hz	50 Hz	60 Hz
	m³/min	m³/min	m³/min		m³/min		m³/min	m³/min	m³/min	m³/min
63	0.83	1.02	0.41		0.48		0.27	0.32	0.08	0.21
71	1.36	1.66	0.66		0.8		0.42	0.51	0.3	0.38
80	2.86	3.41	1.34		1.7		0.87	1.06	0.3	0.38
90	3.3	4.03	1.64		2.01		1.11	1.31	0.76	0.94
	IE3/IE2/IE1		IE3/IE2		IE1		IE3/IE2/IE1		IE3/IE2/IE1	
	50 Hz	60 Hz	50 Hz	60 Hz	50 Hz	60 Hz	50 Hz	60 Hz	50 Hz	60 Hz
	m³/min	m³/min	m³/min	m³/min	m³/min	m³/min	m³/min	m³/min	m³/min	m³/min
80	1.36	1.66	0.66	0.8			0.6	0.73	0.3	0.38
90	2.86	3.41	1.34	1.7			1.11	1.31	0.65	0.8
100	3.8	4.4	2.1	2.6	2.3	2.8	1.5	1.8	1.2	1.3
112	5.0/5.4 [1]	5.7/6.1 [1]	2.9	3.5	2.9	3.5	1.9	2.3	1.4	1.6
132	6.3	7.2	4.6	5.7	4.6	5.7	3.1	3.8	2.4	2.9
160	10.9	13.3	6.7	8.1	7.6	9.1	5	6.1	3.8	4.5
180	12.4	14.8	7.8	9.4	7.8	9.4	5.2	6.2	4.8	5.8
200	14.3	17.2	10.4	12.5	10.4	12.5	7.9	9.5	6	7.2
	IE2									
	50 Hz	60 Hz	50 Hz		60 Hz		50 Hz	60 Hz	50 Hz	60 Hz
	m³/min	m³/min	m³/min		m³/min		m³/min	m³/min	m³/min	m³/min
225	22	26	19		23		15	17.5	11.5	13.5
250	28	33	21		24.5		19	22.5	14.5	16.3
280	32	37.5	32.5		39		24	29.5	18	22
315	48	58	49		58		34	40	25	30.5
	IE4/IE3									
	50 Hz	60 Hz	50 Hz		60 Hz		50 Hz	60 Hz	50 Hz	60 Hz
	m³/min	m³/min	m³/min		m³/min		m³/min	m³/min	m³/min	m³/min
180	10.3	12.3	7		8.3		5.2	6.2	4.8	5.8
200	10.4	12.5	7.6		9.1		6.5	7.8	6	7.2
225	12.4	15.1	6		7.4		8.4	10.3	6.6	8.2
250	13.4	16.4	6		7.4		9.4	11.5	6.8	8.4
280	17.9	21.6	12.8		15.8		12.4	15.1	10.2	12.6
315	40	48.5	32.5		39		31	37	25	30.5

1LE5 motors

Frame size	Required cooling air flow for number of poles							
	2		4		6		8	
	IE3/IE4							
	50 Hz	60 Hz	50 Hz	60 Hz	50 Hz	60 Hz	50 Hz	60 Hz
	m³/min	m³/min	m³/min	m³/min	m³/min	m³/min	m³/min	m³/min
225	10.3	12.6	5	6.2	7	8.6	5.5	6.8
250	11.2	13.7	5	6.2	7.8	9.6	5.7	7
280	14.9	18	10.7	13.2	10.3	12.6	8.5	10.5
315	46/44	56/53	38.5/38	46/46	26.5/–	31/–	–	–
355	44/–	53/–	63/63	75/75	40.5/–	48.5/–	–	–
400	72	84	78	96	102	120	78	96
450	90	108	126	150	90	108	72	84

[1] Value: IE2/IE1

© Innomotics 2024

Introduction

Overview

The order variants for motor protection are coded with letters in the 15th position of the Article No. and, if necessary, using order codes.

In the standard version, the motor is designed without motor protection.
15th position of the Article No. letter **A.**

A distinction is made between current-dependent and motor-temperature-dependent protection devices.

The following applies to all motors:

The motors can withstand 1.5 times the rated current at rated voltage and frequency for two minutes (EN 60034).

Note:
Insulation of winding components
All sensors for winding protection, which can be selected under the Article No. supplements and options for motor protection meet the requirements of basic insulation.
The basic insulation is tested in accordance with Innomotics Product Standard 60034-1 and 60034-18-41 and relates to all sensors and built-in components that are installed in the winding, such as PTC, NTC, Pt100 and bimetal switch.

For example, by ordering with letter **B** in the 15th position of the Article No or as an option with order code **Q11**
"1 or 3 PTC thermistors – for tripping".

The Pt100/1000 already meets the requirements for electrically protective separation according to IEC 61800-5-1.

For PTC elements, a request via quotation center is required after secure separation

Current dependent protection devices

Fuses are only used to protect power cables in the event of a short-circuit. They are not suitable for overload protection of the motor.

The motors are usually protected by thermally delayed overload protection devices (circuit breakers for motor protection or overload relays), e.g. with SIRIUS industrial controls and protection relays. For further details, see Catalog IC 10.

This protection is current-dependent and is particularly effective in the case of a locked rotor.

For standard duty with short start-up times and starting currents not too excessive and for low numbers of switching operations, motor protection switches provide adequate protection. Motor protection switches are not suitable for heavy starting duty or large numbers of switching operations. Differences in the thermal time constants for the protection equipment and the motor result in unnecessary early tripping when the protection switch is set to rated current.

Motor-temperature-dependent protective devices and motor temperature detection with converter operation

Depending on the specific requirements, various different components can be built into the motor winding for switching off the motor before it overheats and for monitoring the winding temperature and motor temperature.

Temperature detectors – Bimetal switches

Bimetal switches operate on the principle of mechanical deformation as a result of long-term heating. Bimetal strips bent as a result of such heating have a spring action that results in sudden reversal of the curvature (concave to convex or vice-versa).

When a limit temperature is reached, these temperature detectors (NC contacts) can deactivate an auxiliary circuit. The circuit can only be reclosed following a considerable fall in temperature. Bimetal switches are suitable protection devices in the case of slowly rising motor temperatures. When the motor current rises quickly (e.g. with a locked rotor), these switches are not suitable due to their large thermal time constants.
Temperature detectors for tripping:
15th position of the Article No. letter **Z** and order code **Q3A.**

The temperature detectors have the following current-carrying capacity and switching capacity:
230 V, AC: 2.5 A
24 V, DC: 1.6 A

PTC thermistors – Thermistor motor protection

PTC thermistors provide the most comprehensive protection against thermal overloading of the motor. A rise in the winding temperature over the admissible value can be accurately detected thanks to the low heat capacity of these PTC (Positive Temperature Coefficient) thermistors and their excellent heat contact with the winding. When the limit temperature is reached (rated tripping temperature), the PTC thermistors undergo a sudden change in resistance. This is evaluated by tripping units and can be used to open auxiliary circuits. PTC thermistors cannot themselves be subjected to high currents and voltages. This results in the destruction of the semiconductor. The switching hysteresis of the PTC thermistor and tripping unit is low, which supports fast restarting of the drive. Motor protection of this type is recommended for heavy duty starting, switching duty, extreme changes in load, high ambient temperatures or fluctuating supply systems.

Motor protection with PTC thermistor for tripping.
In the terminal box, two auxiliary terminals are required.
15th position of the Article No. letter **B.**

Two temperature sensor circuits are used if a warning is required before the motor is shut down (tripped).
The warning is normally set to 10 K below the tripping temperature.

Motor protection with PTC thermistor for alarm and tripping.
In the terminal box, 4 auxiliary terminals are required.
15th position of the Article No. letter **C.**

The following applies to 1LE1 motors:

Motor protection for frame sizes 80 and 90 is implemented with the 15th position of the Article No. letter **B**, and with the order code **Q11** with a PTC thermistor.

Motor protection for frame sizes 80 and 90 is implemented with the 15th position of the Article No. letter **C**, and with the order code **Q12** with two PTC thermistors.

© Innomotics 2024

Overview

The following applies to 1MB1 motors:

The motor protection is implemented with the 15th position of the Article No. letter **B** with three PTC thermistors.

The motor protection is implemented with the 15th position of the Article No. letter **C** with six PTC thermistors.

In order to achieve full thermal protection, it is necessary to combine a thermally delayed overcurrent release and a PTC thermistor. For full motor protection implemented only with PTC thermistors, please inquire.

The SIRIUS 3RN2 thermistor motor protection device for protecting motors against overheating by means of direct temperature measurement, also for a hazardous area with ATEX approval, can be ordered separately. For further details, see Catalog IC 10 or www.siemens.com/product?3RN2.

PTC thermistor characteristic

The PTC thermistor is a temperature-dependent component. At the smallest changes in temperature in the region of the rated shutdown temperature, the resistance of the PTC increases steeply.

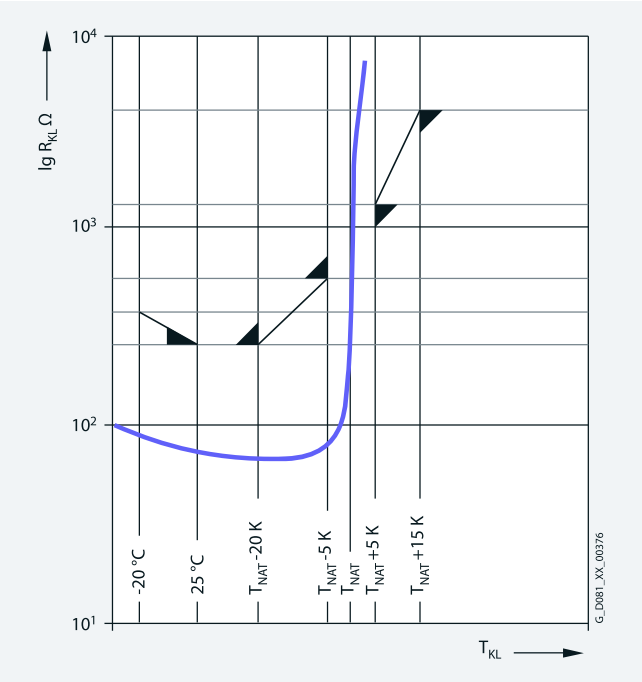

PTC sensor characteristic

NTC thermistor

NTC thermistors have a negative temperature coefficient and conduct current at higher temperatures better than at lower temperatures.

NTC thermistors are typically used for temperature compensation of electronic circuits, or to limit inrush currents, to achieve the soft starting of electrical machines, for example.

Motor temperature monitoring and shutdown using NTC thermistors is unusual, but it is technically possible. The tripping temperature can be set when using suitable tripping devices of this type.

NTC thermistors for tripping: 15th position of the Article No. letter **Z** and order code **Q2A.**

For line operation, the SIRIUS 3RS1, 3RS2 temperature monitoring relay, which forms part of the protection equipment, can be ordered separately.

For further details, see Catalog IC 10 or www.siemens.com/product?3RS1.

NTC thermistor characteristic

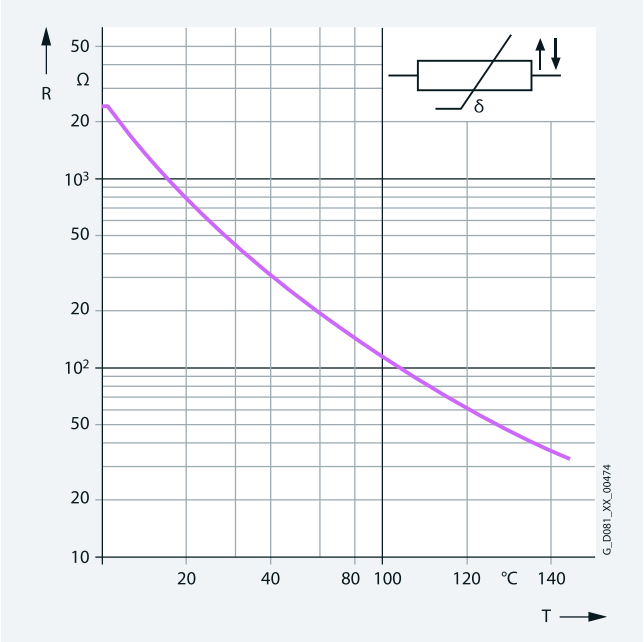

© Innomotics 2024

1

Overview

Pt100/Pt1000 resistance thermometer

The resistance thermometer has a chip for a temperature sensor, the resistance of which changes in relation to temperature according to a series of reproducible basic values. The changes in resistance are transferred as changes in current. At 0 °C, the measurement resistances are adjusted to 100 Ω for the Pt100 and 1000 Ω for the Pt1000, and correspond to the accuracy class B (i.e. the relationship between resistance and temperature). The limit deviation is ±0.3 °C, and the admissible deviations are defined in EN 60751.

Similar to the method of operation of the Pt100, the relationship between the temperature and the electrical resistance of conductors is utilized in the Pt1000 to measure the temperature, just like with the additional resistance thermometers described above.
Pure metals undergo larger changes in resistance than alloys and have a relatively constant temperature coefficient.

The order options for the Pt100/Pt1000 temperature sensors are described in Chapter 2 (15th position of the Article No.: **H, J, K, L, P, Q,** or **R,** or order codes **Q35, Q36, Q60, Q61, Q62, Q63, Q64, Q67, Q68, Q72, Q78,** or **Q79**).

Temperatures for alarm and tripping can be set as required when using converters from Siemens that determine the motor temperature in accordance with the measuring principle described above. With these devices, the measured signal is evaluated directly in the converter.
In line operation, the SIRIUS 3RS1, 3RS2 temperature monitoring relay can be ordered separately for the protection equipment.

For further details, see Catalog IC 10 or www.siemens.com/product?3RS1.

Pt100/Pt1000 resistance thermometer characteristics

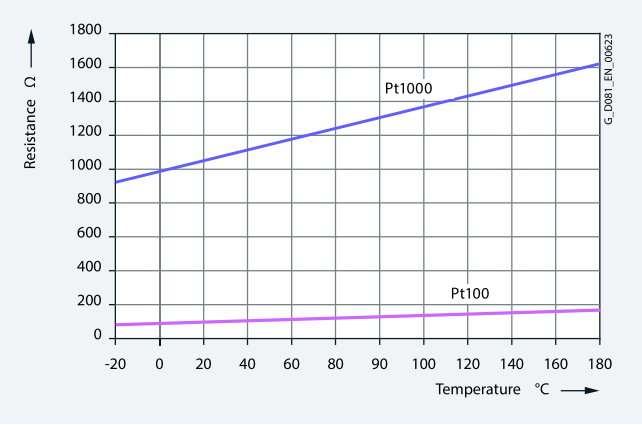

© Innomotics 2024

Overview

Location of the terminal box

The terminal box of the motor can be mounted in four different locations or positions. For the motors of the 1LE10 aluminum series, frame sizes 63 and 71, the terminal box can only be mounted on the top (16th position of the Article No. **4**).
The position of the terminal box is coded using the 16th position of the motor Article No.
When defining the position of the terminal box, please observe the following:

- Motors with feet must always be viewed looking onto the drive end with the shaft in the horizontal position. The feet are then always at "6 o'clock". This is especially important with construction types IM B6, IM B7, and IM B8, and also applies to combined construction types such as IM B35.
- Flange-mounted motors (e.g. IM B5) whose drive-end flange has a condensation drainage hole must always be viewed looking onto the drive end with the shaft in the horizontal position. The condensation drainage hole is then always at "6 o'clock".

The aluminum series motors 1LE10 and 1PC10 with feet and standard power range have cast feet in the standard version in frame sizes up to 160, e.g. IM B3, IM B6, etc. (applies only to IE3 and IE4 motors with standard housing; IE3 and IE4 motors with long housing always have screwed-on feet). Motors from frame size 180 upwards have screwed-on feet. If rotation of the terminal box is to be possible in the future, the "Screwed-on feet" option, order code **H01**, must be ordered. In accordance with the type of construction, spare holes that are not used for mounting the feet can be used by the customer. If the customer would like this option, it is advisable to include order code **H10** "Housing with screw mounting" in the order – possible only for frame sizes 80, 90, 180 and 200. Responsibility for any strength calculations required for this type of customer mounting lies with the customer.

For all motors with increased power and with feet, the feet are screwed-on as standard. The terminal box can be rotated later. Motors with frame sizes 225 to 315 are supplied as standard with cast feet.

Terminal box on right-hand side:
16th position of the Article No. digit **5**

Terminal box on left-hand side:
16th position of the Article No. digit **6**

Terminal box below:
16th position of the Article No. digit **7**

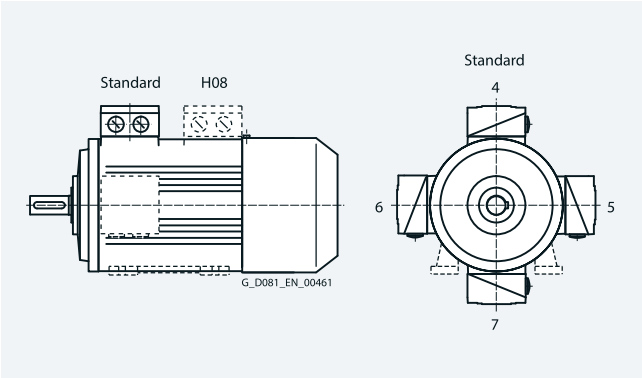

Location of the terminal box with the corresponding digits in the 16th position of the Article No.

The number of winding ends depends on the winding design. Three-phase motors are connected to the three phase conductors L1, L2 and L3 of a three-phase system. The rated voltage of the motor in the running connection must match the phase conductor voltages of the network.

When the three phases are operating in a time sequence and are connected to the terminals of the motor in alphabetical order U1, V1 and W1, clockwise rotation of the motor shaft is established as viewed onto the drive end. The direction of rotation of the motor can be changed to counterclockwise if two connecting leads are interchanged.

Labeled terminals are provided to connect the protective conductor.
A PE terminal is provided in the terminal box for grounding.
A grounding terminal is provided on the outside of the motor housing – special version for 1LE1/1PC1 motors.
Order code **H04**

External grounding terminal/external grounding is standard for 1LE15/16 motors from frame size 180 upwards and for 1LE5/1MB5 motors of frame sizes 400 and 450.

A second external grounding connection can also be ordered. Order code **H70** (must be ordered in combination with order code **H04**)

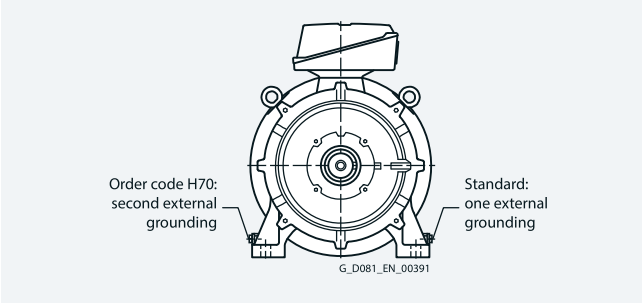

If a brake control system or thermal protection is installed, the connections will also be in the terminal box. The motors are suitable for direct connection to the line supply.

© Innomotics 2024

Introduction

Overview

Design of the terminal box

The number of terminals and the size of the terminal box are designed for standard requirements.

For special requirements, or on customer request, a larger terminal box can be supplied.

For motors with frame sizes 71 up to 90, the following constraints apply:

For configuration, note that, when the terminal box is located on the left or right-hand sides, the customer must not align the cable entry towards the housing feet, because this can cause collisions between the motor connection cables and the foundations.

Larger terminal box
Order code **R50**

If the necessary installation angle of the motor would cause machine components to collide with the terminal box, the terminal box can be moved from the drive end (DE) to the non-drive end (NDE). Only use according to temperature class 155 (F). When the terminal box is rotated to the non-drive end (NDE) of the motor, it is important to note that dimensions "C" and "CA" will not comply with the values specified by EN 50347. Dimensional drawings can be requested via SPC.
Order code **H08**

Motor connection

Line feeder cables
The line feeder cables must be dimensioned acc. to DIN VDE 0298. The number of required feeder cables, if necessary in parallel, is defined by:

- The max. cable cross-section which can be connected,
- The cable type,
- The cable routing,
- The ambient temperature and the corresponding admissible current in accordance with DIN VDE 0298,
- The requirements according to IEC/EN 60204-1,
- The requirements according to IEC/EN 60079-14 for 1MB motors.

For motors with auxiliary terminals (e.g. 15th position of the Article No. letter **B**), additional cable entry holes are provided (M16 × 1.5 or M20 × 1.5 depending on frame size). For further details, see the data sheet function in the SPC.

The terminal box is located on the housing and bolted in place. The terminal box can be turned by 4 × 90° degrees on the terminal base of the machine housing in the case of a terminal board with 6 terminal studs (standard version).
Order code **R09**

Parallel feeders
Some motors must be fitted with parallel feeders due to the maximum permissible current per terminal. These motors are indicated in the selection and ordering data in the respective chapter.

The temperature rises in the terminal box must be taken into account when selecting the connection cable or individual connections.

These approximate temperature rises are as follows:

- Range of ambient temperature (T_{amb}) +50 K for motors with temperature class Th.Cl.155 (F).
- Range of ambient temperature (T_{amb}) +60 K for motors with temperature class Th.Cl.180 (H).
- Without any specifications in field 19 (T_{amb}) on the rating plate, T_{amb} is equal to 40 °C.

Cable entry on the terminal box
With a view onto the drive end of the motor with the shaft in the horizontal position and the terminal box on the top, the cable entry is always on the right-hand side of the motor, as shown in the figure below – standard position 0°.
The terminal box can be rotated on the base of the motor housing such that the cable entry is located in the positions given below:

- Towards the drive end (DE)
  (rotation of terminal box by 90°,
  entry from DE) for B5 types of constructions only with order code **H08**!
  With B14 construction types, the customer must ensure that sufficient space is available for cable outlet.
  Order code **R10**
- Towards the fan end (NDE)
  (rotation of terminal box by 90°,
  entry from NDE)
  Order code **R11**
- Opposite the standard position 0°
  (rotation of terminal box by 180°,
  entry opposite the standard position 0°)
  Order code **R12**

The dimensions of the terminal box are listed in the section "Dimensions" on pages 3/148 to 3/175 in accordance with the frame size and the "Dimensional drawings".
If the position of the terminal box (right-hand side, left-hand side, or top) is changed, the position of the cable entry must be checked and, if necessary, ordered with the corresponding order codes (**R10**, **R11,** and **R12**).

© Innomotics 2024

Overview

Location of the cable entries with the corresponding order codes

Motor	Frame size	Terminal box position						Rotation of the terminal box and cable entry			
		Top	Right-hand side	Left-hand side	Bottom	Retrofitting possible		-90°	+90°	180°	Retrofitting possible
		16th position of the Article No.					Article No. with **-Z** and order code				
Type		**4**	**5**	**6**	**7**	**4**	**H01**	**R10**	**R11**	**R12**	
1FP10, 1LE10, 1MB10, 1PC10	63 … 71	✔	–	–	–	–		✔	✔	✔	Yes
	80 … 90	✔	✔	✔	–	–		✔	✔	✔	Yes
	100, 112	✔	✔	✔	✔	–		✔	✔	✔	Yes
	132	✔	✔	✔	✔	–		✔	✔	✔	Yes
	160	✔	✔	✔	✔	–		✔	✔	✔	Yes
	180	✔	✔	✔	–	–		✔	✔	✔	Yes
	200	✔	✔	✔	–	–		✔	✔	✔	Yes
1FP15, 1LE15, 1MB15 [6]	71	✔	✔	✔	–	–		✔	✔	✔	Yes
	80, 90	✔	✔	✔	–	–		✔	✔	✔	Yes
1FP15, 1LE15/6, 1MB15/6 [1]	100 … 160	✔	✔	✔	✔	–		✔	✔	✔	Yes
	180 … 315	✔	✔	✔	–	–		✔	✔	✔	Yes
1LE5 [2]	315	✔	✔	✔	–	–		✔	✔	✔	Yes
1PC13	80, 90	✔	✔	✔	–	✔		✔	✔	✔	Yes
	100 … 160	✔	✔	✔	✔	✔		✔	✔	✔	Yes
	180 … 315	✔	✔	✔	–	✔		✔	✔	✔	Yes

Motor	Frame size	Terminal box position								Rotation of the terminal box and cable entry			
		Top left	Top right	45° left	45° right	Top	90° right	90° left	Bot-tom	-90°	+90°	180°	Retrofitting possible
		16th position of the Article No.								Article No. with **-Z** and order code			
Type		**0**	**1**	**2**	**3**	**4**	**5**	**6**	**9** [3) 4)]	**R10**	**R11**	**R12**	
1LE5 [9], 1MB5 [8]	225	–	–	–	–	✔	✔	✔	–	✔	✔	✔	Yes
	250	–	–	–	–	✔	✔	✔	–	✔	✔	✔	Yes
	280	–	–	–	–	✔	✔	✔	–	✔	✔	✔	Yes
	315	–	–	–	–	✔	✔	✔	–	✔	✔	✔	Yes
	315 increased power	✔	✔	✔	✔	–	✔	✔	✔	✔	✔	✔	No
	355	✔	✔	✔	✔	–	✔	✔	✔	✔ [5]	✔	✔	No
	400 … 450	✔	✔	✔	✔	–	✔	✔	✔	✔ [7]	✔	✔	No [6]
1MB..5, 1MB..6	315 … 355	–	–	–	–	✔	–	–	–	✔	✔	✔	No

Ordering example:

Terminal box on right-hand side (16th position of the Article No. digit **5**):

Cable entry is from below unless another order code is specified.

Cable entry from drive end (DE) – Article No. with **-Z** and order code **R10**.

For cable entry to a standard terminal box, a metal cable gland can be ordered for motor connection.
One metal cable gland – Article No. with **-Z** and order code **R15.**

For special requirements for which standard holes for the cable entries are inadequate for the UK market, reduction pieces for M cable glands in accordance with British Standard that are mounted on both cable entries can be supplied (only up to frame size 160).
Order code **R30**

Frame size	Cable entry acc. to	
	IEC	British Standard
100	2 × M32	2 × M20
112/132	2 × M32	2 × M25
160	2 × M40	2 × M32

Terminal box in standard position, detailed view

1) 1MB15/6 also applies to 1MB154,1MB164; 1MB5 also applies to 1MB554.
2) 11th position of Article No. for all number of poles **0**, **2**, **4**, **5**; for 6-, 8-pole **6**.
3) Article No with the following order code:
R5L – terminal box on left-hand side (base below)
R6R – terminal box on right-hand side (base below)
R7L – terminal box bottom left
R7R – terminal box bottom right
4) Only possible in combination with type of construction IM B5.
5) Not possible together with terminal box code (16th position of the Article No.) **0**, **1**, **5**, **6** and flange A 900.
6) Only possible with order code **R09**.
7) With a flange, only possible with order code **H08**.
8) 1MB15/6 also applies to 1MB154,1MB164; 1MB5 also applies to 1MB554.
9) 11th position of Article No. for all number of poles **7**, **8**; for 2-, 4-pole **6**.

© Innomotics 2024

Overview

Motor connectors

Motors of frame sizes 63 to 132 can be supplied with a motor connector.
The motor connectors are mounted on the specially designed terminal box at the factory and are aligned towards NDE in the basic version. The terminal boxes can be rotated by 4 × 90° on the base of the motor housing (order codes **R10**, **R12,** and **R13**).

The following motor connector variants are available:

- Motor connector HAN10B-10E
  Order code **R70**
- Motor connector HAN10B-10E EMC
  Order code **R71**

When ordering with order code **R70** and **R71**, order code **R50** is included.

- Motor connector HAN3A-Q12 EMC
  Order code **R72**
- Motor connector HAN3A-Q12
  Order code **R73**

Motor connector assignment

Motor Type	Frame size	Motor connectors Type	Size of the terminal box
1LE10	63 ... 70	HAN10B-10E HAN10B-10E EMC	TB1B60
	80 ... 90	HAN3A-Q12 HAN3A-Q12 EMC	TB1E00 with mounted brake TB1E10
	80 ... 90	HAN10B-10E HAN10B-10E EMC	Only possible with TB1E10
1LE10, 1PC10	100 ... 132	HAN10B-10E HAN10B-10E EMC	Currently only available with TB1F10 (frame sizes 100 and 112) or TB1H10 (frame size 132)

Technical characteristic values of motor connectors according to EN 60664-1 and EN 61984

Characteristic value	Motor connectors			
	HAN3A-Q12		**HAN10B-10E**	
	Degree of pollution			
	3	2	3	2
Rated current	10 A		16 A	
Rated voltage	400 V	400/690 V	500 V	400/690 V
Rated voltage acc. to UL/CSA	600 V		600 V	

For further technical specifications of the motor connectors, refer to the catalog of Harting Deutschland GmbH & Co. at
www.harting.com
or
https://b2b.harting.com/ebusiness/de/industrie-steckverbinder-han/100382.

Protruding cable ends

For confined spaces, protruding cable ends can be ordered without a terminal box with cover plate.

The following lengths of protruding cables can be ordered as standard using order codes:

- 3 cables protruding, 0.5 m long [1)]
  Order code **R20**
- 3 cables protruding, 1.5 m long [1)]
  Order code **R21**
- 6 cables protruding, 0.5 m long
  Order code **R22**
- 6 cables protruding, 1.5 m long
  Order code **R23**
- 6 cables protruding, 3.0 m long
  Order code **R24**

The cross-section of the named cable refers to a coolant temperature of up to CT 40 °C.

In Combination with motor protection (15th position of the Article No.) or anti-condensation heating on request.

[1)] For 3 protruding cables only, it must be specified in plain text whether star or delta connection is required (voltage code **90** and **M1Y**).

© Innomotics 2024

Overview

Terminal box type TB1B00

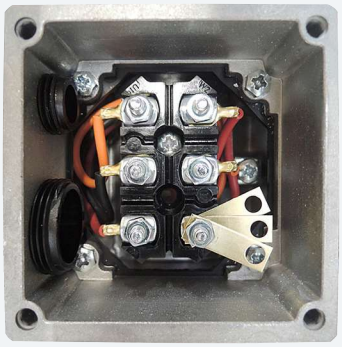

Terminal box type TB1B10

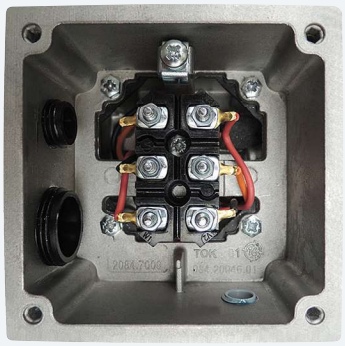

Terminal box type TB1E00

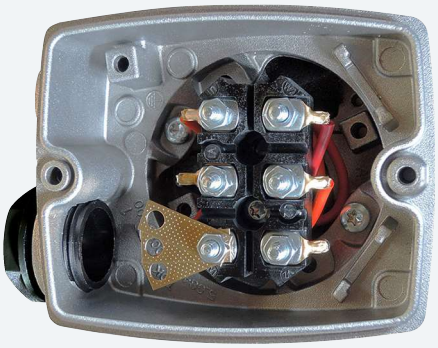

Terminal box type TB1E10 – order code R50

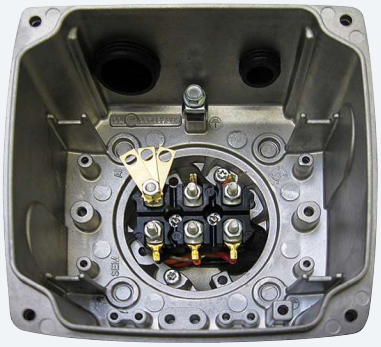

Terminal box types TB1F00, TB1H00, TB1J00

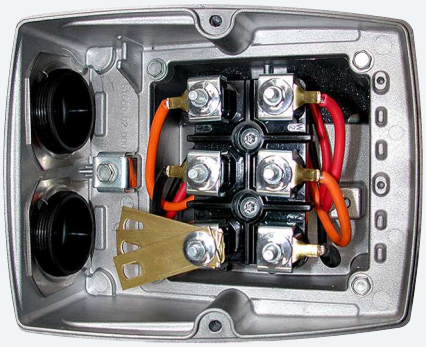

Terminal box types TB1F10, TB1H10, TB1J10 – order code R50

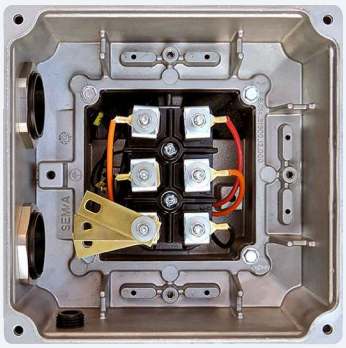

© Innomotics 2024

1

Overview

Terminal box type TB1L00

Terminal box type TB1L10 – order code R50

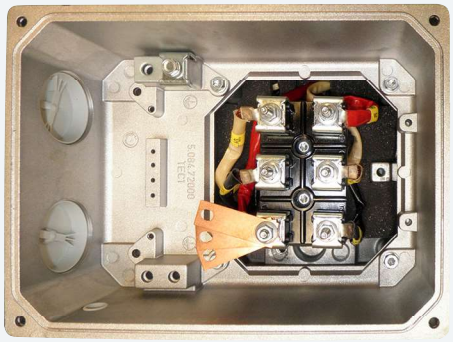

Terminal box type TB1J01

Terminal box type TB1L01

Terminal box type TB1N01

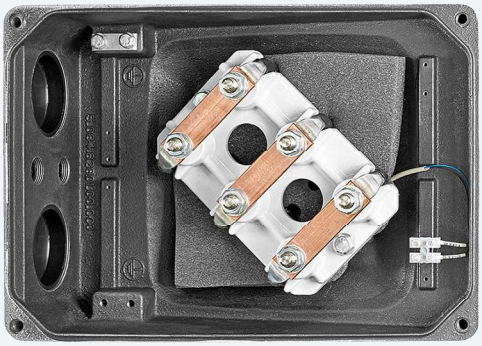

Terminal box type TB1Q01

Motor connector type HAN3A-Q12

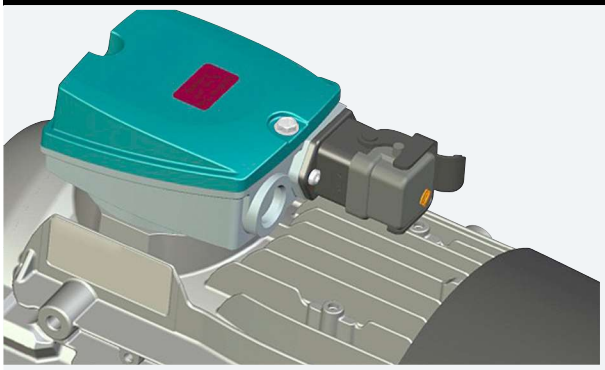

Motor connector type HAN10B-10E

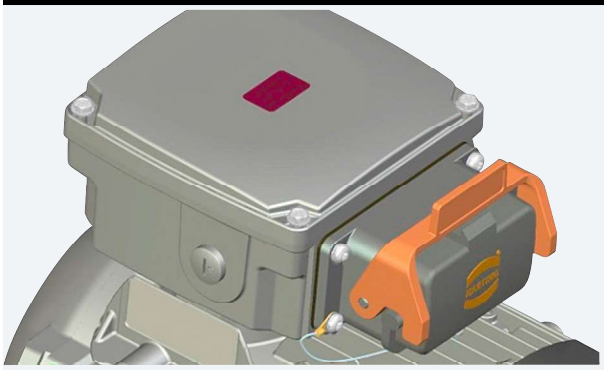

© Innomotics 2024

Overview

Terminal box type TB3R61

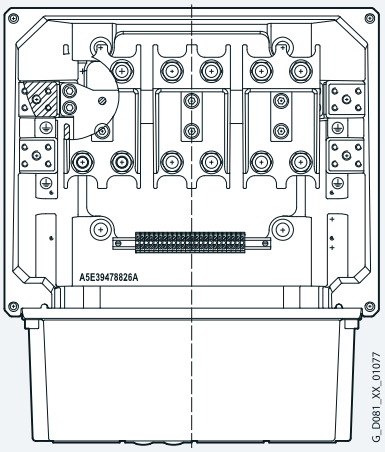

Terminal box type TB4N01

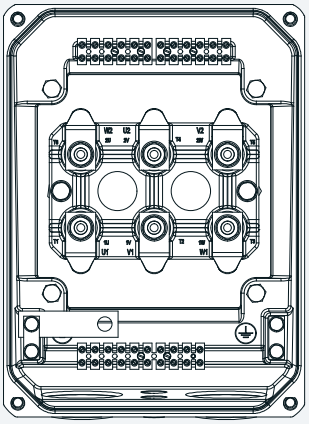

Terminal box type TB4Q01

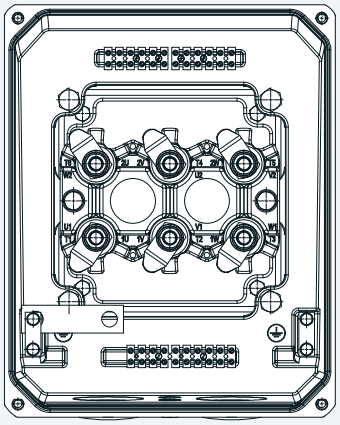

Terminal box type 1XB1631

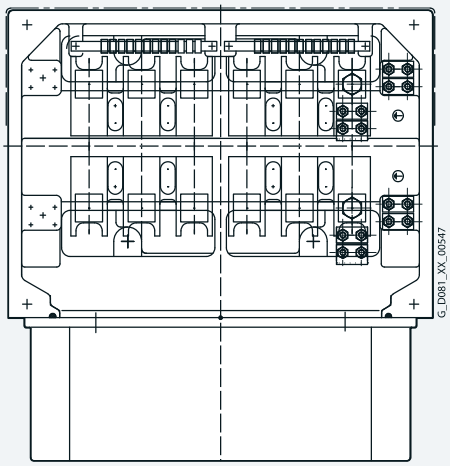

Terminal box type 1XB7750

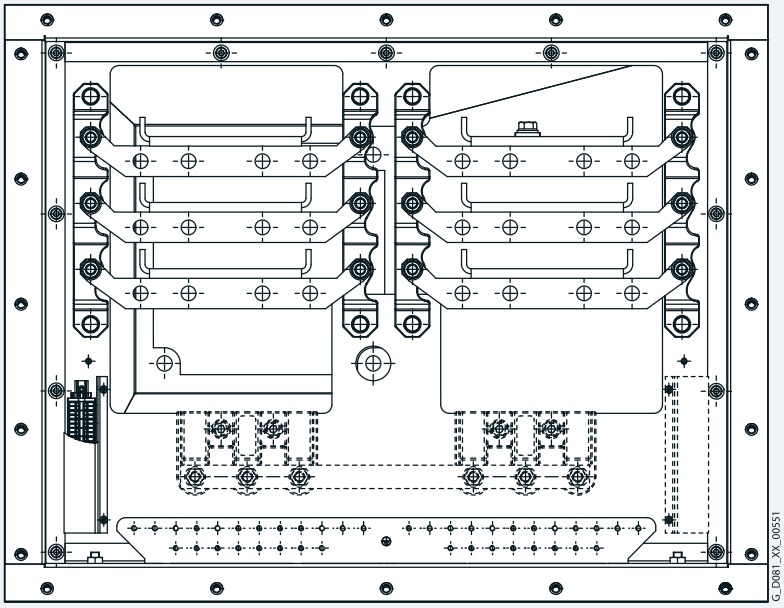

© Innomotics 2024

Overview

Basic data for terminal boxes for 1LE1, 1MB1, 1PC1, 1LE5, and 1MB5 motors

Motor	Frame size	Terminal box	Cable entries/locking	Terminal box material	Feeder connection
1LE10/1MB10/1PC10					
1LE10	63 ... 71	TB1B00 TB1B10	2 entries complete with sealing plugs, thread in terminal box, terminal box mounted and screwed in place	Aluminum alloy	_ Cable lug _ Rigid cable, no cable lug
1LE10	80 ... 90	TB1E00	1 entry complete with sealing plugs, thread in terminal box (2 entries with additional mounting components in the winding), terminal box mounted and screwed in place	Aluminum alloy	_ Cable lug _ Rigid cable, no cable lug
1LE10/ 1MB10	80 ... 90	TB1E10	2 entries complete with sealing plugs, thread in terminal box, terminal box mounted and screwed in place	Aluminum alloy	_ Cable lug _ Rigid cable, no cable lug
1LE10 1MB10 1PC10	100 ... 180 80 ... 160 100 ... 160	TB1F00 TB1H00 TB1J00 TB1F10 TB1H10 TB1J10	2 entries complete with sealing plugs and locknuts, terminal box mounted and screwed in place	Aluminum alloy	_ Cable lug _ Rigid cable, no cable lug
1LE10	200	TB1L00 TB1L10	2 entries complete with sealing plugs, thread in terminal box, terminal box mounted and screwed in place	Aluminum alloy	_ Cable lug _ Rigid cable, no cable lug
1LE15/1LE16/1LE5/1MB15/1MB16/1MB5					
1LE15/ 1MB15	71 ... 90	TB1D01	2 entries complete with sealing plugs, thread in terminal box, terminal box mounted and screwed in place	Cast iron	_ Cable lug _ Rigid cable, no cable lug
1LE15/ 1LE16/ 1MB15/ 1MB16	100 ... 315	TB1F01 ... TB1R01	2 entries complete with sealing plugs, thread in terminal box, terminal box mounted and screwed in place	Cast iron	_ Cable lug _ Rigid cable, no cable lug
1LE5 [2], 1MB5	315 ... 355	TB3Q01 TB3R01	2 entries complete with sealing plugs, thread in terminal box, terminal box mounted and screwed in place	Cast iron	_ Cable lug _ Rigid cable, no cable lug
1LE5 [1]	315	TB1Q01	2 entries complete with sealing plugs, thread in terminal box, terminal box mounted and screwed in place	Cast iron	_ Cable lug _ Rigid cable, no cable lug
1LE5, 1MB5	355 (500 kW)	TB3R01	4 entries complete with sealing plugs, thread in terminal box, terminal box mounted and screwed in place	Cast iron	_ Cable lug _ Rigid cable, no cable lug
1LE5/ 1MB5	400 ... 450	TB3R61 1XB1631	4 entries complete with sealing plugs, thread in terminal box, terminal box mounted and screwed in place	Sheet steel	_ Cable lug _ Rigid cable, no cable lug
		1XB7750	8 entries complete with sealing plugs, thread in terminal box, terminal box mounted and screwed in place		

Note:
Optional cable entries are available for the main connection of the motor for standard cables (order code **R15**) and EMC shielded cables (order code **R14**). These options also include cable glands for the accessories connected in the main terminal box. Alternatively, cable glands are optionally available in maximum configuration for standard cables (order code **R18**) or EMC shielded cables (order code **R16**); thus motors in frame sizes 100 to 450 are supplied with 2 cable glands for the main connection and all necessary cable glands (also auxiliary terminal box) for the accessories. For explosion-protected motors, cable glands for armored cables are optionally available for the main connection (order codes **R45**, **R46**).
Optional cable glands are not possible for flame proof motors with optional Ex db terminal box (order codes **R48**, **R49**).

Technical specifications for terminal boxes for 1LE1, 1LE5, 1MB1, 1MB5, and 1PC1 motors

Frame size	Terminal box [3] Standard/larger (order code **R50**)	Number of terminals	Thread of the contact screw	Max. connectable cable mm^2	Outer cable diameter (sealing range) mm	Cable entry [4] [5]
1LE10/1MB10/1PC1						
63 ... 71	TB1B00/TB1B10	6	M4	4	9 ... 17 / 4,5 ... 10 + 9 ... 17	1 × M25 × 1.5/ 1 × M16 × 1.5 + 1 × M25 × 1.5
80 and 90	TB1E00/TB1E10 [6]	6	M4	4	9 ... 17 / 4,5 ... 10 + 9 ... 17	1 × M25 × 1.5/ 1 × M16 × 1.5 + 1 × M25 × 1.5
100	TB1F00/TB1F10	6	M4	4	11 ... 21	2 × M32 × 1.5
112						
132	TB1H00/TB1H10	6	M4	6	11 ... 21	2 × M32 × 1.5
160	TB1J00/TB1J10	6	M5	16	19 ... 28	2 × M40 × 1.5
180						
200	TB1L00/TB1L10	6	M6	25	27 ... 35	2 × M50 × 1.5
1LE15/1MB15						
71 ... 90	TB1D01	6	M4	1.5/2.5 with cable lug	4,5 ... 10 + 9 ... 17	1 × M16 × 1.5 + 1 × M25 × 1.5

1) 11th position of Article No. for all number of poles **0**, **2**, **4**, **5**; for 6-, 8-pole **6**.
2) 11th position of Article No. for all number of poles **7**, **8**; for 2-, 4-pole **6**.
3) In addition to the exact part designation, please specify the machine type and the serial number in all orders for spare parts and repair parts.
4) Designed for cable glands with O-ring.
5) NPT threads can be ordered with order code **Y61**.
6) For 1LE1021, 1LE1023, and 1MB10, terminal box TB1E10 normal version.

© Innomotics 2024

Overview

Technical specifications for terminal boxes for 1LE1, 1LE5, 1MB1, 1MB5, and 1PC1 motors

Frame size	Terminal box [1] Standard/larger (order code **R50**)	Number of terminals	Thread of the contact screw	Max. connectable cable mm²	Outer cable diameter (sealing range) mm	Cable entry [2] [3]
1LE15/1LE16/1MB15/1MB16						
100	TB1F01/TB1J01	6	M4	4	11 … 21	2 × M32 × 1.5/ 2 × M40 × 1.5
112						
132	TB1H01/TB1J01	6	M4	6	11 … 21	2 × M32 × 1.5
160	TB1J01/TB1K01	6	M5	16	19 … 28	2 × M40 × 1.5
180	TB1J01/TB1K01	6	M5/M6	16/25	19 … 28/27 … 35	2 × M40 × 1.5/2 × M50 × 1.5
200	TB1L01/TB1L01	6	M6/M8	25/35	27 … 35/27 … 35	2 × M50 × 1.5/2 × M50 × 1.5
225	TB1L01/TB1N01	6	M8/M10	35/120	27 … 35/34 … 42	2 × M50 × 1.5/2 × M63 × 1.5
250	TB1N01/TB1Q01	6	M10/M12	120/150 [9]	34 … 45	2 × M63 × 1.5
280						2 × M63 × 1.5
315	TB1Q01/TB1R01	6	M12/M16	120/150 [9]	38 … 45/ 44 … 54	2 × M63 × 1.5 / 2 × M63 × 1.5
1LE55/1LE56/1MB5						
225	TB4L01/TB4N01	6	M 8/M 10	35/120	27 … 35/ 34 … 45	2 x M50 x 1.5/ 2 x M63 x 1.5
250	TB4N01/TB4Q01	6	M10/M12	120/150 [9]	34 … 45	2 × M63 × 1.5
280						2 × M63 × 1,5
315 [4]	TB1Q01/TB1R01	6	M12/M16	185/240 [9]	34 … 45	2 × M63 × 1,5
					63 … 70 [8]	2 × M80 × 2
315 [5]	TB3Q01/TB3R01	6	M12/M16	185/240 [9]	44 … 55	2 × M63 × 1,5
					63 … 70 [8]	2 × M80 × 2
355 [6]	TB3R01	6	M16	240 [9]	63 … 70 [9]	2 × M80 × 2
		12	2 × M16			4 × M80 × 2
355 [7]	TB3R01	12	2 × M16	240 [9]	63 … 70 [8]	4 × M80 × 2
	TB3R61					
400 … 450	TB3R61/1XB7750	12	M16	240	56 … 64.5	4 × M80 × 2
	1XB1631/1XB7750		M16	300	56 … 64.5	4 × M80 × 2
	–/1XB7750	48	M12	300	41 … 57	8 × M72 × 2

Technical specifications for auxiliary terminal boxes Ex e order code **R54** for 1MB1.5, 1MB1.6, 1MB5.5, 1MB5.6

Frame size	Thread of the contact screw	Conductor cross-section max. mm²	Add-on terminals in the main terminal box max.	Cable entry	Order code **R62**	Add-on terminals (**R62**) max.	Order code **R63**	Add-on terminals (**R63**) max.	Order code **R67**	Add-on terminals (**R67**) max.
Innomotics XP 1MB1.5/1MB1.6/1MB5.5, 1MB5.6										
71	6 x M5	16	11	2 × M40 × 1,5	ja	12	nein	–	ja	12
80										
90										
100	6 X M5									
112										
132	6 x M6	35	20	2 × M50 × 1,5						
160	6 X M6	50	18							
180										
200	6 x M10	120	24	2 × M63 × 1,5			ja	25		

Terminal connection

The terminal board accommodates the terminals that are connected to the leads to the motor windings. The terminals are designed so that 1LE1-motor types for frame sizes 71 to 315 and for all 1MB-motor types, the external (line) connections can be made without the need for cable lugs.

The description of the connection system applies to 1MB for all types of protection, except in conjunction with terminal box Ex db (order code **R48**).

Note:
Cable entry thread for accessories
FS 63 to 180: M16 x 1.5 , FS 200 to 450: M20 x 1.5

1) In addition to the exact part designation, please specify the machine type and the serial number in all orders for spare parts and repair parts.
2) Designed for cable glands with O-ring.
3) NPT threads can be ordered with order code **Y61**.
4) 11th position of Article No. for all number of poles **0**, **2**, **4**, **5**; for 6-, 8-pole **6**, **7**; for 8-pole **8**.
5) 11th position of Article No. for all number of poles **7**, **8**; for 2-, 4-pole **6**. (for high current alternatively TB3Q61)
6) 11th position of Article No. for all number of poles **1**, **2**, **3**, **4**.
7) 11th position of Article No. for 2-, 4-pole **5**.
8) Sealing range of outer cable diameter for 1MB is 59 … 64 mm.
9) Valid for cables class. 5 according to IEC 60228. The number of required feeder cables, if necessary in parallel, depends on the rated current.

© Innomotics 2024

Connection, circuit and terminal boxes

Overview

Auxiliatrry terminal box									
		Option code							
		R60 (not for 1LE15/6)		**R62**				**R63**	
Frame size		200 to315		160 to315				250 to315	
Terminal box typ		1XB3020		TB2J01				TB2N01	
Material		Aluminum		Cast iron				Cast iron	
Number of terminals max.	ks	6	10	8	12	12	14	30	36
Terminal typ of aux. Terminals		AKZ4	AKZ2,5	SN71104-B	SN71104-A	AKZ4	AKZ2,5	AKZ4	AKZ2,5
Nominal circuit voltage acc. to IEC	V	275	175	400	400	275	175	275	175
Max. connectable cable	mm^2	4	2.5	2.5	2.5	4	2.5	4	2.5
Rated current	A	21	15	–	–	21	15	21	15
Maximum permissible current potntial VSD	kV	6	4	–	–	6	4	6	4
Cable entry – standard		1 x M20 x 1.5		1 x M20 x 1.5				2 x M20 x 1.5	
Outer cable diameter (sealing range)	Ø mm	7 ... 13		7 ... 13				7 ... 13	
Cable entry – max.		2 x M25 x 1.5		2 x M25 x 1.5				4 x M25 x 1.5	
Outer cable diameter (sealing range) max.	Ø mm	9 ... 17		9 ... 17				9 ... 17	
Maximum dimension B x H x L	mm	75 x 57 x 80		77 x 62 x 112				86 x 72 x 206	
Volume	cm^3	245		310					

Number of auxiliary terminal boxes for main terminal box

Number of auxiliary terminal boxes TB2J01, TB2N01 in combination with standard terminal box												
	Frame size	100, 112	132	160	180	200	225	250	280	315		355
		Terminal box										
Auxiliary terminal box		Type										
Type	Order code	TB1F01	TB1H01	TB1J01		TB1L01/TB4L01		TB1N01/TB4N01		TB1Q01	TB3Q01	TB3R01
TB2J01	**R62**	–	–	✓		✓		✓		✓	✓	✓
TB2N01	**R63**	–	–	–		–		✓		✓	✓	✓
2 x TB2J01	**R67**	–	–	✓		✓		✓		✓	✓	✓
2 xTB2N01	**R68**	–	–	–		–		✓		✓	✓	✓

Maximum number of auxiliary terminal boxes TB2J01, TB2N01 in combination with large terminal box (order code R50)											
	Frame size	100, 112, 132	160	180	200	225	250	280	315		
		Terminal box									
Auxiliary terminal box		Type									
Type	Order code	TB1J01	TB1K01		TB1L01	TB1N01/ TB4N01	TB1Q01/TB4Q01		TB1R01	TB3R01	
TB2J01	**R62**	✓	✓		✓	✓	✓		✓	✓	
TB2N01	**R63**	–	–		–	✓	✓		✓	✓	
2 x TB2J01	**R67**	✓	✓		✓	✓	✓		✓	✓	
2 x TB2N01	**R68**	–	–		–	✓	✓		✓	✓	

Maximum number of auxiliary terminal boxes TB2J01, TB2N01 in combination with universal terminal box (order code R52 or R53)										
	Frame size	100 ... 160	180	200	225	250	280	315		355
		Terminal box								
Auxiliary terminal box		Type								
Type	Order code		TB1J61	TB1L61/TB4L61		TB1N61/TB4N61		TB1Q61	TB3Q41	TB3R41
TB2J01	**R62**	Not available	✓	✓		✓		✓	✓	✓
TB2N01	**R63**	Not available	–	–		✓		✓	✓	✓
2 x TB2J01	**R67**	Not available	✓	✓		✓		✓	✓	✓
2 x TB2N01	**R68**	Not available	–	–		✓		✓	✓	✓

Note:
The type code of the main or auxiliary terminal box change for explosion proof motors 1MB... by ending ...02 (e.g. TB2J02).
The universal terminal box is not available for explosion proof motors 1MB...

© Innomotics 2024

Overview

Position of auxiliary terminal box in relation to position of TB1J01, TB1L01, TB1N01, TB1Q01, TB1K01 main terminal box

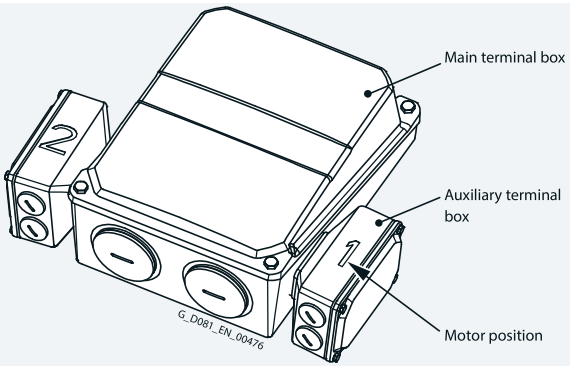

Auxiliary terminal box TB2J01 (order code R62) in combination with TB1J01, TB1L01, TB1N01, TB1Q01, TB1K01 main terminal box												
	Position of the main terminal box											
	Top				Right-hand side				Left-hand side			
	16th position of Article No. and when ordering with order code, Article No. with **-Z**											
	4				**5**				**6**			
	Rotation of terminal box											
	0° (default)	90°, entry from DE	90°, entry from NDE	180°	0° (default)	90°, entry from DE	90°, entry from NDE	180°	0° (default)	90°, entry from DE	90°, entry from NDE	180°
	Order code											
Number of auxiliary terminal boxes	–	**R10**	**R11**	**R12**	–	**R10**	**R11**	**R12**	–	**R10**	**R11**	**R12**
	Positions of auxiliary terminal boxes – see Figure											
1	1	1	1	2	1	2	1	2	2	1	2	1
2	1 + 2	1 + 2	1 + 2	1 + 2	1 + 2	–	–	1 + 2	1 + 2	–	–	1 + 2

© Innomotics 2024

Connection, circuit and terminal boxes

Overview

Position of auxiliary terminal box in relation to position of TB1R01, TB1J61, TB1L61, TB1N61, TB1Q61 main terminal box

1

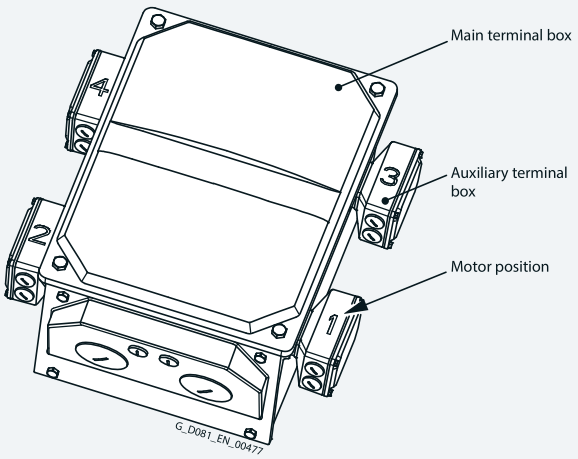

Auxiliary terminal box TB2J01 (order code R62) in combination with TB1R01, TB1J61, TB1L61, TB1N61, TB1Q61 main terminal box												
	Position of the main terminal box											
	Top				Right-hand side				Left-hand side			
	16th position of Article No. and when ordering with order code, Article No. with **-Z**											
	4				**5**				**6**			
	Rotation of terminal box											
	0° (default)	90°, entry from DE	90°, entry from NDE	180°	0° (default)	90°, entry from DE	90°, entry from NDE	180°	0° (default)	90°, entry from DE	90°, entry from NDE	180°
	Order code											
Number of Auxiliary terminal boxes	–	**R10**	**R11**	**R12**	–	**R10**	**R11**	**R12**	–	**R10**	**R11**	**R12**
	Positions of auxiliary terminal boxes – see Figure											
1	1	1	1	2	1	2	1	2	2	1	2	1
2	1 + 3	1 + 3	1 + 3	2 + 4	1 + 3	2 + 4	1 + 3	2 + 4	2 + 4	1 + 3	2 + 4	1 + 3
(3 on requ.)	1 + 2 + 3	1 + 2 + 3	1 + 2 + 3	1 + 2 + 4	1 + 2 + 3	–	–	1 + 2 + 4	1 + 2 + 4	–	–	1 + 2 + 3
(4 on requ.)	1 + 2 + 3 + 4	1 + 2 + 3 + 4	1 + 2 + 3 + 4	1 + 2 + 3 + 4	1 + 2 + 3 + 4	–	–	1 + 2 + 3 + 4	1 + 2 + 3 + 4	–	–	1 + 2 + 3 + 4

© Innomotics 2024

Overview

All motors are designed to IP55 degree of protection. They can be installed in dusty or humid environments. The motors are suitable for operation in tropical climates. Guide value < 60 % relative air humidity at CT 40 °C. Other requirements are available on request (see table on page 1/35).

Brief explanation of the degree of protection

IP54:

_ Protection against harmful dust deposits

_ Protected against spray water

IP55:

_ Protection against harmful dust deposits

_ Protection against water jets from any direction

IP56:

_ Protection against harmful dust deposits

_ Protection against powerful water jets from any direction

Order code **H22**
Important: Note that submersion by waves or total immersion, even temporarily, is not permitted especially in the case of motors with fans. This corresponds to IP67 or IP68 degree of protection (please inquire).
EN 60034-5 defines protection level 6 for water protection as: "Protection against water due to heavy seas or water in a powerful jet". IP56 degree of protection can only be used with the requirement "Protection against a powerful jet" and not for the requirement "Protection against heavy sea".
Not possible in combination with brake BFK458 (order code **F01**).

IP65:

_ Complete protection against dust deposits

_ Protection against water jets from any direction

Order code **H20**
In EN 60034-5, the code 6 for protection against the ingress of foreign bodies and touch hazard protection for electrical machines is not listed – Data for code 6 (protection against the ingress of dust) is given in EN 60529.
Not possible in combination with HOG 9 DN 1024 I rotary pulse encoder (order code **G05**) and/or brake BFK458 (order code **F01**) and/or paint finish, cast-iron parts primed (order code **S00**).

EN 60529 contains a comprehensive description of this degree of protection as well as test conditions.

With motors that have a vertical shaft extension, the end user must prevent an ingress of fluid along the shaft.

For motors with shaft extension pointing downwards, the version "Protective cover for types of construction" order code **H00** is urgently recommended, see also the explanations on "Types of construction" on page 1/56.

With flange-mounted motors, for IM V3 type of construction, collection of fluid in the flange basin can be prevented by drainage holes (on request).

The condensation drainage holes at the drive end (DE) and non-drive end (NDE) are sealed (IP55) on delivery.
If the condensation drainage holes are ordered for motors of the IM B6, IM B7 or IM B8 type of construction (feet on side or top), the position of the drainage holes will be in the correct position for the type of construction.
Order code **H03**

© Innomotics 2024

Introduction

Types of construction

1

Overview

Standard types of construction and special types of construction

Type of construction acc. to EN 60034-7		Frame size	Letter of the 14th position of the Article No.	Additional identification code **-Z** with order code
Without flange				
IM B3/IM 1001		63 to 450	**A**	–
IM B6/IM 1051	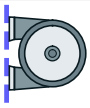	63 to 355	**T**	–
IM B7/IM 1061	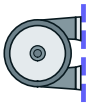	63 to 355	**U**	–
IM B8/IM 1071	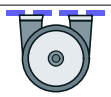	63 to 355	**V**	–
IM V5/IM1011 without protective cover		63 to 450	**C** [1]	–
IM V6/IM 1031		63 to 450	**D**	–
IM V5/IM 1011 with protective cover		71 to 450	**C**	**+ H00** [2]
With flange				
IM B5/IM 3001	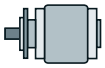	63 to 450	**F**	–
IM V1/IM 3011 without protective cover		63 to 450	**G** [1]	–
IM V1/IM 3011 with protective cover		71 to 450	**G**	**+ H00** [2]
IM V3/IM 3031		63 to 355	**H**	–
IM B35/IM 2001	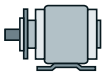	63 to 450	**J**	–
IM V15/IM 2011	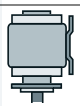	71 to 315	**W**	–

In the EN 50347 standard, flanges FF with through holes and flanges FT with tapped holes are specified.

For footnotes, see next page.

© Innomotics 2024

Overview

Type of construction acc. to EN 60034-7		Frame size	Letter of the 14th position of the Article No.	Additional identification code **–Z** with order code
With flange				
IM B14/IM 3601		63 to 160	**K**	**–**
IM V19/IM 3631		80 to 315	**L**	**–**
IM V18/IM 3611 without protective cover	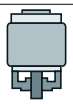	80 to 315	**M** [1]	**–**
IM V 18/IM 3611 with protective cover	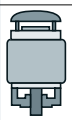	80 to 315	**M**	**+ H00** [2]
IM B34/IM 2101		80 to 315	**N**	**–**
With flange – next largest				
IM B14/IM 3601		80 to 315	**K**	**+ P01**
IM B34/IM 2101		80 to 315	**N**	**+ P01**
IM V18/IM 3611 without protective cover	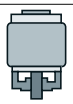	80 to 315	**M** [1]	**+ P01**
IM V 18/IM 3611 with protective cover	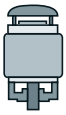	80 to 315	**M**	**+ P01** **+ H00** [2]
IM V19/IM 3631		80 to 315	**L**	**+ P01**

[1] Ex The following applies for explosion-protected motors:
In the case of the types of construction with shaft extension pointing downwards, the version "with protective cover" is required. For types of construction with shaft extension pointing upwards, a suitable cover must be implemented to prevent small parts from falling into the fan cover (see the standard IEC/EN 60079-0). The cover must not block the cooling air flow.

[2] Standard cylindrical shaft extension (second shaft extension), order code **L05**, is not possible.

© Innomotics 2024

Flange dimensions

Overview

In EN 50347, flanges are assigned to the frame sizes as FT with tapped holes. See the table on the next page for flange dimensions.

1

The dimensions of the following types of construction are identical:
IM B3, IM B6, IM B7, IM B8, IM V5 and IM V6
IM B5, IM V1 and IM V3
IM B14, IM V18 and IM V19

Motors in the standard power range can be ordered in basic types of construction IM B3, IM B5 or IM B14 and operated in mounting positions IM B6, IM B7, IM B8, IM V5, IM V6, IM V1, IM V3 (up to frame size 160 L) or IM V18 and IM V19.
Lifting eyes are available for transport and installation in a horizontal position. In conjunction with the lifting eyes, for the purpose of stabilizing the position when the motor is arranged vertically, additional slings (EN 1492-1) and/or lashings (EN 12195-2) must be used.

When a motor for mounting position IM V1 is ordered directly, the motor is supplied with lifting eyes for vertical mounting (up to frame size 90 and frame sizes 180 and 200 for aluminum motors without eyebolts).

The motors are designated in accordance with the types of construction on the rating plate.

With motors that have a vertical shaft extension, the end user must prevent an ingress of fluid along the shaft. In the case of all types of construction with shaft extension pointing downwards, the version "with protective cover" is urgently recommended, see section "Degrees of protection" on page 1/55 – housing version.

Motors with feet, in some cases, have two fixing holes at the non-drive end (NDE), see dimension tables on pages 3/148 to 3/175.

A screwed-on cover (made of sheet metal or plastic) is included as standard for horizontal types of construction and types of construction with shaft pointing upwards (14th position of the Article No. letter **A, T, U, V, D, F, H, J, K, L, N**) on motors up to FS 160 in combination with condensation drainage holes, order code **H03**.

© Innomotics 2024

Overview

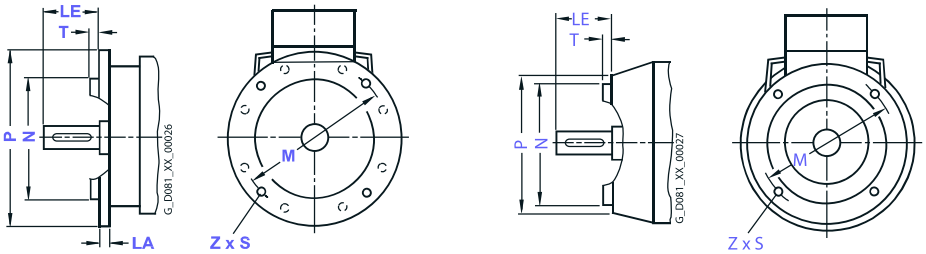

In EN 50347, the frame sizes are allocated flange FF with through holes and flange FT with tapped holes.

The designation of flange A and C according to DIN 42948 (invalid since September 2003) are also listed for information purposes. See the table below.
(**Z** = the number of retaining holes)

Frame size	No. of poles	Type of construction	Flange type – possibly with order code	Flange with _ Through holes (**FF**/A) _ Tapped holes (**FT**/C) Acc. to EN 50347	Acc. to DIN 42948	Dimension designation acc. to **IEC** **LA**	**LE**	**M**	**N**	**P**	**S**	**T**	**Z**
63 M	2 … 8	IM B5, IM B35, IM V1, IM V3	Flange	**FF115**	A 140	–	23	115	95	140	10	3	4
			Next smallest flange – **P02**	**FF100**	A 120	–	23	100	80	120	7	3	4
		IM B14, IM B34, IM V18, IM V19	Flange	**FT75**	C 90	–	23	75	60	90	M6	2.5	4
			Next largest flange [1] – **P01**	**FT100**	C 120	–	23	100	80	120	M6	3	4
			Next smallest flange – **P02**	**FT65**	C 80	–	23	65	50	80	M5	2.5	4
71 M	2 … 8	IM B5, IM B35, IM V1, IM V3	Flange	**FF130**	A 160	5	30	130	110	160	10	3.5	4
			Next smallest flange – **P02**	**FF115**	A 140	–	30	115	95	140	10	3	4
		IM B14, IM B34, IM V18, IM V19	Flange	**FT85**	C 105	–	30	85	70	105	M6	2.5	4
			Next largest flange [1] – **P01**	**FT115**	C 140	–	30	115	95	140	M8	3	4
			Next smallest flange – **P02**	**FT75**	C 90	–	30	75	60	90	M5	2.5	4
80 M	2 … 8	IM B5, IM B35, IM V1, IM V3	Flange	**FF165**	A 200	10	40	165	130	200	12	3.5	4
			Next smallest flange – **P02**	**FF130**	A 160	–	40	130	110	160	10	3.5	4
		IM B14, IM B34, IM V18, IM V19	Flange	**FT100**	C 120	–	40	100	80	120	M6	3	4
			Next largest flange [1] – **P01**	**FT130**	C 160	–	40	130	110	160	M8	3.5	4
90 S/L	2 … 8	IM B5, IM B35, IM V1, IM V3	Flange	**FF165**	A 200	10	50	165	130	200	12	3.5	4
			Next largest flange – **P01**	**FF215**	A 250	–	50	215	180	250	14.5	4	4
		IM B14, IM B34, IM V18, IM V19	Flange	**FT115**	C 140	–	50	115	95	140	M8	3	4
			Next largest flange – **P01**	**FT130**	C 160	–	50	130	110	160	M8	3.5	4
100 L	2 … 8	IM B5, IM B35, IM V1, IM V3	Flange	**FF215**	A 250	11	60	215	180	250	14.5	4	4
			Next largest flange – **P01**	**FF265**	A 300	12	60	265	230	300	14.5	4	4
			Next smallest flange – **P02**	**FF165**	A 200	11	60	165	130	200	12	3.5	4
		IM B14, IM B34, IM V18, IM V19	Flange	**FT130**	C 160	–	60	130	110	160	M8	3.5	4
			Next largest flange – **P01**	**FT165**	C 200	–	60	165	130	200	M10	3.5	4
			Next smallest flange – **P02**	**FT115**	C 140	–	60	115	95	140	M8	3	4
112 M	2 … 8	IM B5, IM B35, IM V1, IM V3	Flange	**FF215**	A 250	11	60	215	180	250	14.5	4	4
			Next largest flange – **P01**	**FF265**	A 300	12	60	265	230	300	14.5	4	4
			Next smallest flange – **P02**	**FF165**	A 200	11	60	165	130	200	12	3.5	4
		IM B14, IM B34, IM V18, IM V19	Flange	**FT130**	C 160	–	60	130	110	160	M8	3.5	4
			Next largest flange – **P01**	**FT165**	C 200	–	60	165	130	200	M10	3.5	4
132 S/M	2 … 8	IM B5, IM B35, IM V1, IM V3	Flange	**FF265**	A 300	12	80	265	230	300	14.5	4	4
			Next largest flange – **P01**	**FF300**	A 350	13	80	300	250	350	18.5	5	4
			Next smallest flange – **P02**	**FF215**	A 250	11	80	215	180	250	14.5	4	4
		IM B14, IM B34, IM V18, IM V19	Flange	**FT165**	C 200	–	80	165	130	200	M10	3.5	4
			Next largest flange – **P01**	**FT215**	C 250	–	80	215	180	250	M12	4	4
160 M/L	2 … 8	IM B5, IM B35, IM V1, IM V3	Flange	**FF300**	A 350	13	110	300	250	350	18.5	5	4
			Next smallest flange – **P02**	**FF265**	A 300	12	110	265	230	300	14.5	4	4
		IM B14, IM B34, IM V18, IM V19	Flange	**FT215**	C 250	–	110	215	180	250	M12	4	4
180 M/L	2 … 8	IM B5, IM B35, IM V1, IM V3	Flange	**FF300**	A 350	13	110	300	250	350	18.5	5	4
			Next smallest flange – **P02**	**FF265**	A 300	12	110	265	230	300	14.5	4	4

[1] With reference to standard EN 50347, flanges that are 2 levels larger are used with order code **P01** in the frame sizes 63 to 80.

© Innomotics 2024

Introduction

Flange dimensions

Overview

Frame size	No. of poles	Type of construction	Flange type – possibly with order code	Flange with _ Through holes (**FF**/A) _ Tapped holes (**FT**/C) Acc. to EN 50347	Acc. to DIN 42948	Dimension designation acc. to **IEC** **LA**	**LE**	**M**	**N**	**P**	**S**	**T**	**Z**
200 L	2 ... 8	IM B5, IM B35, IM V1, IM V3	Flange	**FF350**	A 400	15	110	350	300	400	18.5	5	4
			Next smallest flange – **P02**	**FF300**	A 350	13	110	300	250	350	18.5	5	4
225 S/M	2	IM B5, IM B35, IM V1, IM V3	Flange	**FF400**	A 450	16	110	400	350	450	18.5	5	8
	4 ... 8						140						
250 M	2 ... 8	IM B5, IM B35, IM V1, IM V3	Flange	**FF500**	A 550	18	140	500	450	550	18.5	5	8
280 S/M	2 ... 8	IM B5, IM B35, IM V1, IM V3	Flange	**FF500**	A 550	18	140	500	450	550	18.5	5	8
315 S/M/L	2	IM B5, IM B35, IM V1, IM V3	Flange	**FF600**	A 660	22	140	600	550	660	24	6	8
	4 ... 8						170						
315 L for 1LE5	2	IM B5, IM B35, IM V1, IM V3	Flange	**FF740**	A 800	25	140	740	680	800	24	6	8
	4						170						
	2		Next smallest flange – **P02**	**FF600**	A 660	22	140	600	550	660	24	6	8
	4						170						
355 M/L for 1LE5	2	IM B5, IM B35, IM V1, IM V3	Flange	**FF840**	A 900	25	140	840	780	900	24	6	8
	4						170						
	2		Next smallest flange – **P02**	**FF740**	A 800	25	140	740	680	800	24	6	8
	4						170						
400 for 1LE5/1MB5	2	IM B5, IM B35, IM V1	Flange	**FF940**	A1000	28	170	940	880	1000	22	6	8
	4 ... 8						210						
450 for 1LE5/1MB5	2	IM B5, IM B35, IM V1	Flange	**FF1080**	A1150	30	170	1080	1000	1150	26	6	8
	4 ... 8						210						

[1] With reference to standard EN 50347, flanges that are 2 levels larger are used with order code **P01** in the frame sizes 63 to 80.

© Innomotics 2024

Overview

Shaft extension

60° center hole acc. to DIN 332, Part 2 with M3 to M24 tapped hole depending on the shaft diameter (see dimension tables in section 2 of the catalog).

DE (shaft extension)	
Diameter	Thread
mm	mm
7 ... 10	DR M3
> 10 ... 13	DR M4
> 13 ... 16	DR M5
> 16 ... 21	DR M6
> 21 ... 24	DR M8
> 24 ... 30	DR M10
> 30 ... 38	DR M12
> 38 ... 50	DR M16/DS M16
> 50 ... 85	DS M20
> 85 ... 130	DS M24

Shaft extension with standard dimensions, without feather keyway

For motor series 1LE1, 1LE5, 1MB1, 1MB5, and 1PC1, the standard shaft extension can be ordered with standard dimensions without a feather keyway. The key convention does not have to be stamped onto the rating plate for balancing.
Order code **L04**

Standard shaft made of stainless steel

A standard shaft made of stainless steel can be ordered for the 1LE1, 1LE5, 1MB1, 1MB5, and 1PC1 motor series (e.g. 1.4021). This is only possible for shaft extensions of standard dimensions.
Order code **L06**

Special non-rusting materials are only available on request.

Non-standard cylindrical shaft extension

The non-standard cylindrical shaft extension can be used on the drive end (DE) (with plain text according to table). The feather keys are supplied in every case.
Order code **Y58**

For order code **Y58** non-standard cylindrical shaft extension (DE):

- Dimension D: less than or equal to the inner diameter of the roller bearing, tolerance band less than tolerance band acc. to EN 50347.
- Dimension E: less than or equal to 2 × length E (standard) of the shaft extension.

When motors are ordered that have a longer or shorter shaft extension than normal, the required position and length of the feather keyway must be specified in a sketch. It must be ensured that only feather keys in accordance with EN 50347, Form A are used. The feather keyway is positioned centrally on the shaft extension. The length is defined by the manufacturer in accordance with the appropriate standard. Not valid for: Conical shafts, non-standard threaded journals, non-standard shaft tolerances, friction welded journals, extremely "thin" shafts, special geometry dimensions (e.g. square journals), hollow shafts. Valid for non-standard shaft extensions DE or NDE. The feather keys are supplied in every case.

See the table below "Admissible changes to the shaft extension DE" and the dimension tables in the relevant sections of the catalog.

Admissible changes to the shaft extension DE (**Y58**)

Motor series	Frame size	No. of poles	Shaft extension length E in mm		Shaft extension diameter D in mm	
			Standard	min. up to max.	Standard	min. up to max.[1]
1LE1, 1MB1 [2]	63	2 ... 8	23	12 ... 46 (step 1 mm)	11	9 ... 12 (step 1 mm)
	71		30	15 ... 60 (step 1 mm)	14	11 ... 15 (step 1 mm)
	80		40	20 ... 80 (step 1 mm)	19	12 ... 20 (step 1 mm)
	90		50	25 ... 100 (step 1 mm)	24	12 ... 25 (step 1 mm)
1LE1, 1MB1 [2], 1PC1	100	2 ... 8	60	30 ... 120 (step 1 mm)	28	19 ... 30 (step 1 mm)
	112					
	132		80	40 ... 160 (step 1 mm)	38	24 ... 40 (step 1 mm)
	160		110	55 ... 160 (step 1 mm)	42	28 ... 45 (step 1 mm)
	160			160 ... 220 (step 5 mm)		
1LE1, , 1MB1 [2]	180	2 ... 8	110	55 ... 160 (step 5 mm)	48	38 ... 50 (step 1 mm)
	180			160 ... 220 (step 1 mm)		
	200			55 ... 160 (step 1 mm)	55	38 ... 60 (step 1 mm)
	200			160 ... 220 (step 5 mm)		
1LE15, 1LE16, 1MB15 [2], 1MB16	250	2	140	70 ... 280 (step 5 mm)	60	55 ... 75 (step 1 mm)
		4 ... 8			65	
	280	2				
		4 ... 8			75	65 ... 85 (step 1 mm)
	315	2			65	55 ... 80 (step 1 mm)
		4 ... 8	170	85 ... 280 (step 5 mm)	80	65 ... 95 (step 1 mm)
1LE5	225	2	110	55 ... 220 (step 5 mm)	55	48 ... 65 (step 1 mm)
		4 ... 8	140	70 ... 280 (step 5 mm)	60	
	250	2		70 ... 280 (step 5 mm)	60	55 ... 70 (step 1 mm)
		4 ... 8			65	
	280	2				55 ... 75 (step 1 mm)
		4 ... 8			75	65 ... 80 (step 1 mm)
1LE5, 1MB5	315	2	140	70 ... 280 (step 5 mm)	65	55 ... 80 (step 1 mm)
		4 ... 8	170	85 ... 280 (step 5 mm)	80	65 ... 95 (step 1 mm)
	355	2	140	70 ... 280 (step 5 mm)	75	55 ... 85 (step 1 mm)
		4 ... 8	170	85 ... 280 (step 5 mm)	95	65 ... 100 (step 1 mm)

[1] At maximum admissible diameter, a step increase in shaft diameter is not possible.

[2] For explosion-protected motors Ex db, Ex eb (Zone 1) on request.

© Innomotics 2024

Overview

Standard, cylindrical shaft extension NDE acc. to EN 50347 (second shaft extension)

Order code **L05** (on request)

For a coupling output, the standard, cylindrical shaft extension can transmit the full rated power.

Please also inquire about the transmitted power and admissible cantilever force if belt pulleys, chains or gear pinions are used on the standard, cylindrical shaft extension.

A standard, cylindrical shaft extension (second shaft extension) NDE is not available if a rotary pulse encoder and/or a separately driven fan has been mounted onto the motor. Please inquire for mounted brakes.

Dimensions and tolerances for keyways and keys are designed to EN 50347. The motors are always supplied with a key inserted in the shaft.

If the second shaft extension has non-standard dimensions, this must be ordered with order code **Y59** non-standard shaft dimensions NDE.

For the order code **Y59** (with plain text specifications according to the table).

- Dimension D: less than or equal to fan hub inner diameter, for frame size 160 tolerance band is less than tolerance band to EN 50347
- Dimension E: less than or equal to 2 × length E (standard) of the shaft extension

When motors are ordered that have a longer or shorter shaft extension than normal, the required position and length of the feather keyway must be specified in a sketch. It must be ensured that only feather keys in accordance with EN 50347, Form A are used. The feather keyway is positioned centrally on the shaft extension. The length is defined by the manufacturer in accordance with the appropriate standard. Not valid for: Conical shafts, non-standard threaded journals, non-standard shaft tolerances, friction welded journals, extremely "thin" shafts, special geometry dimensions (e.g. square journals), hollow shafts. Valid for non-standard shaft extensions DE or NDE. The feather keys are supplied in every case.

See the table below "Admissible changes to the shaft extension NDE" and the dimension tables in the relevant sections of the catalog.

Admissible changes to the shaft extension NDE (**Y59**)

Motor series	Frame size	No. of poles	Shaft extension length E in mm		Shaft extension diameter D in mm	
			Standard	min. up to max.	Standard	min. up to max.[1]
1LE1, 1MB1 [2]	63	2 ... 8	23	12 ... 46 (step 1 mm)	11	9 ... 12 (step 1 mm)
	71		30	15 ... 60 (step 1 mm)	14	11 ... 15 (step 1 mm)
	80		40	20 ... 80 (step 1 mm)	19	12 ... 20 (step 1 mm)
	90					
1LE1, 1MB1 [2], 1PC1	100	2 ... 8	50	25 ... 120 (step 1mm)	24	19 ... 25 (step 1 mm)
	112					
	132		60	30 ... 160 (step 1 mm)	28	24 ... 35 (step 1 mm)
	160		110	55 ... 160 (step 1 mm)	42	24 ... 45 (step 1 mm)
	160			160 ... 220 (step 5 mm)		
1LE1, , 1MB1 [2]	180	2 ... 8	110	55 ... 160 (step 1 mm)	48	38 ... 48 (step 1 mm)
	180			160 ... 220 (step 5 mm)		
	200			55 ... 160 (step 1 mm)	55	38 ... 58 (step 1 mm)
	200			160 ... 220 (step 5 mm)		
1LE15, 1LE16, 1MB15 [2], 1MB16	225	2	110	55 ... 220 (step 5 mm)	48	48 ... 58 (step 1 mm)
		4 ... 8	140	70 ... 280 (step 5 mm)	55	
	250	2				55 ... 73 (step 1 mm)
		4 ... 8			60	
	280	2				
		4 ... 8			65	65 ... 73 (step 1 mm)
	315	2		85 ... 280 (step 5 mm)	60	55 ... 78 (step 1 mm)
		4 ... 8	170	85 ... 280 (step 5 mm)	70	65 ... 78 (step 1 mm)
1LE5	225	2	110	55 ... 220 (step 5 mm)	48	48 ... 58 (step 1 mm)
		4 ... 8			55	
	250	2				55 ... 62 (step 1 mm)
		4 ... 8	140	70 ... 280 (step 5 mm)	60	
	280	2				55 ... 73 (step 1 mm)
		4 ... 8			65	65 ... 73 (step 1 mm)
1LE5, 1MB5	315	2	140	70 ... 280 (step 5 mm)	60	55 ... 78 (step 1 mm)
		4 ... 8		85 ... 280 (step 5 mm)	70	65 ... 78 (step 1 mm)
	355	2		70 ... 280 (step 5 mm)	60	55 ... 92 (step 1 mm)
		4 ... 8	170	85 ... 280 (step 5 mm)	80	65 ... 92 (step 1 mm)

Non-standard, cylindrical shaft extensions up to the specified lengths and diameters can be supplied for the motor series listed in the tables "Admissible changes to the shaft extension DE (**Y58**)" and "Admissible changes to the shaft extension NDE (**Y59**)". All other dimensions are available on request.

It is the responsibility of the customer to ensure that the admissible cantilever forces are reduced in accordance with the non-standard shaft extension.

[1] At maximum admissible diameter, a step increase in shaft diameter is not possible.

[2] For explosion-protected motors Ex db, Ex eb (Zone 1) on request.

© Innomotics 2024

Shaft and rotor

Overview

Shaft extension run-out, concentricity and perpendicularity in accordance with IEC 60072-1 precision class for flange-mounted motors

In IEC 60072-1, normal class (normal) and precision class (reduced) are defined:

1. Circular run-out tolerances for the shaft extension
2. Concentricity tolerances for the shaft extension and flange centering
3. Perpendicularity tolerances for the shaft extension and flange surface

The shaft extension run-out, concentricity and perpendicularity according to IEC 60072-1 precision class for flange-mounted motors can be ordered using order code **L08**.
This order code can be combined for motors with deep-groove bearings of series 60.., 62.. and 63... This is not possible in combination with a mounted brake or encoder.

The shaft extension run-out can be ordered according to IEC 60072-1 precision class for types of construction without flange with order code **L07**.

Circular run-out tolerance for the shaft extension

Diameter of the cylindrical shaft extension	Circular run-out tolerance	
D	Normal class	Precision class (reduced)
mm	mm	mm
≤ 10	0.03	0.015
> 10 ... 18	0.035	0.018
> 18 ... 30	0.04	0.021
> 30 ... 50	0.05	0.025
> 50 ... 80	0.06	0.03
> 80 ... 120	0.07	0.035

Concentricity tolerance of the centering spigot and linear movement tolerance of the flange surface to the shaft extension axis

Flange	Dimension designation acc. to IEC		Concentricity and perpendicularity tolerance	
FF/FT	N	P	Normal class	Precision class
	mm	mm	mm	mm
55	40	70	0.08	0.04
65	50	80	0.08	0.04
75	60	90	0.08	0.04
85	70	105	0.08	0.04
100	80	120	0.08	0.04
115	95	140	0.08	0.04
130	110	160	0.1	0.05
165	130	200	0.1	0.05
215	180	250	0.1	0.05
265	230	300	0.1	0.05
300	250	350	0.125	0.063
350	300	400	0.125	0.063
400	350	450	0.125	0.063
500	450	550	0.125	0.063
600	550	660	0.16	0.08
740	680	800	0.16	0.08
940	880	1000	0.2	0.1
1080	1000	1150	0.2	0.1

Measures for gear mounting

Overview

The flange-mounted motors can be equipped with a radial sealing ring in order to mount gearing.
Order code **H23**

It must be ensured that the sealing ring is lubricated using grease, oil mist, or oil spray. (It is not admissible to use pressurized oil > 0.1 bar.) We recommend that the admissible bearing loads are carefully checked.

© Innomotics 2024

Introduction

Overview

All rotors are dynamically balanced with an inserted half key. This corresponds to vibration severity grade A (normal or standard). DIN EN 60034-14 Aug. 2018 regulates the vibrational behavior of machinery. Based on ISO 21940-32, the key convention "half key (H)" must be used for balancing.

Note:
If there is a keyway, a full feather key is always inserted on delivery.

The type of key convention is stamped on the face of the shaft extension at the customer side DE/NDE:

F = Balancing with full key (full-key convention)

H = Balancing with half key (half-key convention) – standard

N = Balancing without key – Plain text required (convention without key)

For motors up to frame size 112 the code is stamped on the rating plate.
Full-key balancing or balancing with full feather key (F) is possible by specifying order code **L02** (additional charge).

Balancing without feather key (N) is possible by specifying order code **L01** (additional charge).

Vibration severity grade A is the standard version and is valid up to a rated frequency of 60 Hz. If 2-pole motors of frame sizes 280 and 315 are to be rigidly installed, cast feet are necessary in order to comply with the vibration requirements of IEC 60034-14. IE4 2-pole motors in frame size 315 and pole-changing motors (4-pole/2-pole) fulfill the vibration requirements specified in IEC 60034-14 only when the motor is elastically suspended.

The low-vibration version B can be supplied to fulfill stricter requirements on smooth running (additional charge).

Vibration severity grade B Order code **L00**
Conditions:

Not possible in combination with cylindrical roller bearings.
Order code **L22**

Not possible in combination with order codes **G40**, **G41**, **G42**.

2-pole trans-standard aluminum motors in frame sizes 180 and 200 (14th position of the Article No. is A, C, D, J, T, U, V) have cast-iron feet.

For converter operation vibration severity grade B is guaranteed only at rated Direct On Line (DOL) speed at 50 Hz or 60 Hz.

Motors in type of protection Ex db eb IIB or Ex db eb IIC reach limits of grade B up to rated speed (DOL frequency).

The limits stated in the table apply to uncoupled, freely suspended, idling motors.

This vibration is assessed in accordance with vibration severity grade A or B according to EN 60034-14 (see table).

The rating plate (with DOL data) of the motor is marked with vibration severity grade B.

For converter operation with frequencies higher than 60 Hz, special measures e.g. balancing is required for compliance with the specified limit values (plain text: maximum supply frequency/speed).

For further details, see the online help in the SPC.

Limits (rms values) for max. vibration severity in terms of vibration displacement (s) and vibration velocity (v) for the shaft height H

Vibration severity grade	Machine installation	Shaft height H in mm			
		56 ≤ H ≤ 132		H > 132	
		s_{rms} µm	v_{rms} mm/s	s_{rms} µm	v_{rms} mm/s
A	Free suspension	45	2.8	45	2.8
	Rigid clamping	–	–	37	2.3
B	Free suspension	18	1.1	29	1.8
	Rigid clamping	–	–	24	1.5

For details, see standard EN 60034-14 Aug. 2018, EN 60034-14:2004 + A1:2007

If the type tests for machines with shaft height H > 132 mm demonstrate a determining component with twice the line frequency, the limit for maximum vibration severity in the Table (for grade A) can be increased from 2.3 mm/s (rms value) to 2.8 mm/s (rms value) or (for grade B) from 1.5 mm/s (rms value) to 1.8 mm/s (rms value). Higher values must be agreed beforehand. A component with twice the line frequency is regarded as dominant if the type test shows that it is greater than 70 % of 2.3 mm/s (rms value) (for grade A) or 70 % of 1.5 mm/s (rms value) (for grade B).

© Innomotics 2024

Overview

The noise is measured in accordance with EN ISO 1680 in a dead room. It is specified as A-weighted enveloping surface sound pressure level L_{pfA} in dB (A).
This value is the spatial average value of the sound pressure levels measured at the measuring surface. The measuring surface is a cube 1 m away from the surface of the motor.
The sound power level is also specified as L_{WA} in dB (A).
The specified values are valid at 50 Hz and rated power (see the selection and ordering data). The tolerance is +3 dB.
Noise values for motors in converter operation on request.

To reduce noise levels, 2-pole motors from frame size 132 S to frame size 355 and higher can optionally be equipped with a unidirectional axial-flow fan.
For frame sizes 400 and 450, the axial-flow fan is standard.
The values are listed in the table "Low-noise version" below.

Clockwise rotation:
Order code **F77**

Counterclockwise rotation:
Order code **F78**

Second shaft extension and/or mountings (mounting of brake, separately driven fan or encoder) not possible except for 1MB.553 motors.

Low-noise version			
Motor series	Frame size	2-pole motors	
		L_{pfA} dB (A)	L_{WA} dB (A)
1LE1 [1]	132	60	72
1MB1 [1]	160	60	72
1LE10, 1LE15/6,	180	63	76
1MB15/6 [2]	200	64	77
1LE15/6, 1MB15/6 [2]	225	72	86
1LE5	250	73	87
	280	72	85
	315	76	90
1LE5, 1MB5	400	74	90
	450	75	91

For the motor types 1LE5 and 1MB5 of frame sizes 315 and 355, the noise level is reduced by 1 to 2 dB with the low-noise version.

[1] With the exception of 1LE1 and 1MB1 motors with order code **F90** – version "Forced-air cooled motors without external fan and fan cover".

[2] 1MB15/6 also applies to 1MB154, 1MB164, and 1MB155.

© Innomotics 2024

Overview

Bearing lifetime (nominal lifetime)

The nominal bearing lifetime is defined according to standardized calculation procedures (ISO 281) and is reached or even exceeded for 90 % of the bearings when the motors are operated in compliance with the data provided in the catalog.

Under average operating conditions, a lifetime (L_{10h}) of 100 000 hours can be achieved.

Generally, the bearing lifetime is defined by the bearing size, the bearing load, the operating conditions, the speed and the grease lifetime. A bearing lifetime calculation is possible on request.

Bearing system

The bearing lifetime of motors with horizontal mounting is 40 000 hours if there is no additional axial loading at the coupling output and 20 000 hours when utilized according to the maximum admissible load. This assumes that the motor is operated at 50 Hz. The nominal bearing lifetime is reduced for converter operation at higher frequencies.

In order to achieve the calculated lifetime in continuous operation, the admissible vibration values (measured at bearing plate) must be determined according to evaluation zones A and B stipulated in ISO 10816. If higher vibration velocities occur in operation (e.g. with order code **H02**), special measures must be taken (please inquire).

Due to their physical characteristics, variable-speed motors have a different bearing lifetime under the same load conditions – this relationship is linear, i.e. if the frequency increases by 20 % from 50 Hz to 60 Hz, the lifetime decreases by 20 % from 20 000 to 16 000 hours under the load conditions specified in the catalog.
If the frequency falls by 20 % from 50 Hz to 40 Hz, under the load conditions specified in the catalog, the lifetime rises by 20 % from 20 000 to 24 000 hours.

It should be observed that, for types of construction IM B6, IM B7, IM B8, IM V5, and IM V6, the belt tension is only permitted to act parallel to the mounting plane or towards the mounting plane and the feet must be supported. Both feet must be secured for foot-mounting types of construction.

In the basic bearing system, the floating bearing is situated at the drive end (DE) and the located bearing is situated at the non-drive end (NDE). For motors of the 1MB.553 series, the located bearing DE is the standard version.

The bearing system is axially preloaded with a spring element at the drive end (DE) to ensure smooth running of the motor without play (see Fig. 1 in the diagrams of bearings on page 1/74).

From frame size 160 upwards, the located bearing is axially secured at the non-drive end (NDE).

For the 1LE5 and 1MB5 motors of frame sizes 400 and 450, the located bearing is situated at the drive end (DE) and the floating bearing is situated at the non-drive end (NDE).
The bearing system on these motors is axially preloaded with a spring element at the non-drive end (NDE) to ensure smooth running of the motor without any play (see Figs. 6 and 7 under the bearing diagrams on page 1/74).

Up to frame size 132, an additional axially-secured located bearing can be supplied on the non-drive end (NDE) complete with a retaining ring (see Fig. 2 under the diagrams of bearings on page 1/74) or, for frame sizes 400 and 450, the located bearing can be supplied at the non-drive end (NDE).
Order code **L21**

Depending on the specific installation conditions (axial forces, cantilever forces and type of construction), testing of additional measures for the bearing version is recommended. The located bearing can also be supplied at the drive end (DE) (see Fig. 3 under the diagrams of bearings on page 1/74).
A located bearing at the drive end (DE) is recommended when gearing is installed, for a shaft extension pointing downwards, or pumps and fans are mounted directly on the motor shaft.
Order code **L20**

For increased cantilever forces (e.g. belt drives), reinforced bearings can be used at the drive end (DE).
Versions with cylindrical roller bearings are not axially preloaded, and must always operate under adequate radial loads (it is not permissible that motors are operated on a test stand without additional radial loads). The locating bearing is located at the non-drive end (NDE) when cylindrical roller bearings are fitted.
Order code **L22**

1LE1, 1LE5, 1MB1, 1MB5, and 1PC1 motors can be supplied with reinforced bearings (size range 03) at both ends.
In this case, the bearing plates are made of cast iron (standard for series 1LE16 motors). Standard for motors of the 1MB.553 series from frame size 100 upwards.
Order code **L25**

A measuring nipple for SPM shock pulse measurement can be mounted to check bearing vibration. The motors have an M8 tapped hole for each bearing plate and a measuring nipple with a protective cap. If a second tapped hole is provided, it is fitted with a sealing plug. Not possible for frame sizes < 100.
Order code **Q01**

Bearing selection for increased cantilever forces (see the Table "Bearing selection for 1LE10, 1MB10, and 1PC10 motors – Bearings for increased cantilever forces" on page 1/70) – for the maximum axial load, see page 1/85 onwards.

© Innomotics 2024

Overview

Bearing insulation

To prevent damage caused by bearing currents, insulated bearings can be supplied for frame sizes 225 to 355 – they are recommended for motors from frame size 225 upwards. For frame sizes 400 and 450 (for converter operation), the bearing insulation is indispensable.

- **L50** (DE bearing insulation) means NDE located bearing as standard
- **L51** (NDE bearing insulation) means DE located bearing as standard
- **L50** + **L51** (insulated DE and NDE bearings) means NDE located bearing as standard
- Combination of order codes **L50** or **L51** or **L50** + **L51** with **L22** (bearing version for increased cantilever forces) means NDE located bearing as standard.
- In combination of order code **L50** with **L22**, it is necessary to reduce the radial load.

According to IEC 60034-1-11, it is up to the user in the case of DE bearing insulation (order code **L50**) + NDE bearing insulation (order code **L51**) to ensure grounding of the rotor.

The rotor grounding can be implemented either in the system via the coupled driven machine or in the motor via a grounding brush.

The grounding brush (order code **L52**) must always be provided when the driven machine is connected to the motor via an insulating coupling or an insulating belt output shaft.

Permanent lubrication

On motors equipped with permanent lubrication, the bearing grease lifetime is matched to the bearing lifetime. This can, however, only be achieved if the motor is operated in accordance with the catalog specifications.
In the basic version, the motors have permanent lubrication.

Regreasing

For motors which can be regreased at defined regreasing intervals, the bearing lifetime can be extended and/or unfavorable factors such as temperature, mounting conditions, speed, bearing size, and mechanical load can be compensated.

This regreasing option is possible in the following frame sizes:

- Frame sizes 100 to 160: M8 × 1 acc. to DIN 71412-A (conical lubricating nipple)
- Frame sizes 180 to 315: M10 × 1 acc. to DIN 3404-A (flat lubricating nipple).
- Frame sizes 400 to 450: M10 × 1-5.8-A acc. to DIN 3404-A.- (flat lubricating nipple)

Order code **L23**
(frame sizes ≥ 280 basic version, for the Performance Line motors of frame sizes ≥ 160 basic version)

A regreasing device with M10 × 1 conical lubricating nipple to DIN 71412-A can be optionally provided for frame sizes 180 to 450.
Order code **L19**

In the case of motors equipped with regreasing device, information regarding regreasing intervals, quantity of grease, type of grease and any additional data is provided on the lubrication plate or rating plate. For regreasing intervals for the basic version, see the Table "Grease lifetime and regreasing intervals for horizontal installation". For motors with a mounted holding brake (order code **F01**) a regreasing device cannot be installed, including up to FS 160.

Mechanical stress and grease lifetime

High speeds that exceed the rated speed with converter operation and the resulting increased vibrations alter the mechanical running smoothness and the bearings are subjected to increased mechanical stress. This reduces the grease lifetime and the bearing lifetime (please inquire where applicable).

The use of rigid couplings should be avoided as far as possible. For converter operation in particular, compliance with the mechanical limit speeds n_{max} at maximum supply frequency f_{max} is essential, see the following table "Mechanical limit speeds n_{max} at maximum supply frequency f_{max}".

© Innomotics 2024

1

Overview

Mechanical limit speeds n_{max} at maximum supply frequency f_{max} (standard values) for 1LE1, 1LE5, 1PC1 motors – basic version and 1LE15 and 1LE16 motors – basic version with order codes L22, L25, L28 – 1MB10/5/6 motors with order codes L22 and L25

Frame size	Type		2-pole		4-pole		6-pole		8-pole	
			n_{max} rpm	f_{max} Hz	n_{max} rpm	f_{max} Hz	n_{max} rpm	f_{max} Hz	n_{max} rpm	f_{max} Hz
1LE10 motors, basic version										
	1LE10..-									
63	**0B...**		6000	100	4200	140	3600	180	3000	200
71	**0C...**		6000	100	4200	140	3600	180	3000	200
80 M	**0D...**		6000	100	4200	140	3600	180	3000	200
90 S/L	**0E...**		6000	100	4200	140	3600	180	3000	200
1LE15 Basic Line motors – bearings for increased cantilever forces – order code L22 **1LE15 Basic Line motors – bearings reinforced at both ends – order code L25**										
	1LE15..-									
71 M	**0C...**		6000	100	4200	140	3600	180	3000	200
80 M	**0D...**		6000	100	4200	140	3600	180	3000	200
90 S/L	**0E...**		6000	100	4200	140	3600	180	3000	200
1LE10, 1PC1 motors, basic version **1LE15 Basic Line and 1LE16 Performance Line – bearings for increased cantilever forces – order code L22** **1LE15 Basic Line and 1LE16 Performance Line – bearings reinforced at both ends – order code L25**										
	1LE1...- **1PC1...-**									
100 L	**1A...**		6000	100	4200	140	3600	180	3000	200
112 M	**1B...**		6000	100	4200	140	3600	180	3000	200
132 S/M	**1C...**		5600	93	4200	140	3600	180	3000	200
160 M/L	**1D...**		4800	80	4200	140	3600	180	3000	200
180 M/L	**1E...**		4600	77	4200	140	3600	180	3000	200
200 L	**2A...**		4500	75	4200	140	3600	180	3000	200
1LE15 Basic Line and 1LE16 Performance Line – basic version **1LE15 Basic Line and 1LE16 Performance Line – bearings for increased cantilever forces – order code L22** **1LE15 Basic Line and 1LE16 Performance Line – bearings reinforced at both ends – order code L25** **1LE15 Basic Line and 1LE16 Performance Line – DE cylindrical roller bearings and NDE reinforced bearings – order code L28**										
	1LE15..- **1LE16..-**									
180 M/L	**1E...**		4600	77	4200	140	3600	180	3000	200
200 L	**2A...**		4500	75	4200	140	3600	180	3000	200
225 S/M	**2B...**		4500	75	4500	150	4400	220	4400	293
250 M	**2C...**		3900	65	3700	123	3700	185	3700	247
280 S/M	**2D...**		3600	60	3000	100	3000	150	3000	200
315 S/M/L	**3A...**		3600	60	2600	87	2600	130	2600	173
1LE55 Basic Line and 1LE56 Performance Line – basic version **1LE55 Basic Line and 1LE56 Performance Line – bearings for increased cantilever forces – order code L22**										
	1LE55..- **1LE56..-**									
225	**2B...**		4500	75	3700	123	3000	150	3000	150
250	**2C...**		3900	65	3700	123	3000	150	3000	150
280	**2D...**		3600	60	3000	100	3000	150	3000	200
315 L	**3A...**		3600	60	2600	87	2600	130	2600	173
355 M/L	**3B...**		3600	60	2600	87	2600	130	2600	173
400	**4A...**	IMB3	3600	60	2200	73	2200	110	2200	147
450	**4B...**	IMB3	3000/3600[1]	50	2100	70	2100	105	2100	140
400	**4A...**	IMV1	–	–	2100	70	2100	105	2100	140
450	**4B...**	IMV1	–	–	1800	60	1800	90	1800	120

The specified limit speeds are applicable to motors without additional mountings, such as brakes or rotary encoders. In such applications, the characteristics of the respective mounting parts must be taken into account.

Note:
Mechanical limit speeds for Innomotics XP 1MB motors, see Chapter 6.

[1] Order on request.

© Innomotics 2024

Overview

Grease lifetime and regreasing intervals for horizontal installation

Motor series	Frame size	No. of poles				
Permanent lubrication [1]						
			Grease lifetime up to CT 40 °C [2]			
1LE1/1MB1/1PC1	63 … 250	2 … 8	20000 h or 40000 h [3]			
Regreasing [1]						
			Lubrication interval ISO Cl F 155 °C		Lubrication interval ISO Cl H 180 °C	
			CT ≤ 40 °C	40 °C < CT ≤ 80 °C	40 °C < CT ≤ 60 °C	60 °C < CT ≤ 80 °C
1LE1/1MB1/1PC1	100 … 160	2 … 8	8000 h	4000 h [2]	4000 h	2000 h [2]
	180 … 280	2	4000 h	2000 h [2]	1000 h	1000 h [2]
		4 … 8	8000 h	4000 h [2]	2000 h	2000 h [2]
	315	2	3000 h	1500 h [2]	1000 h	1000 h [2]
		4 … 8	6000 h	3000 h [2]	1500 h	1500 h [2]
			CT ≤ 40 °C	40 °C < CT ≤ 80 °C	CT ≤ 40 °C	40 °C < CT ≤ 80 °C
1LE5/1MB5	225, 250	2	4000 h	2000 h [2]	1000 h	1000 h [2]
		4 … 8	8000 h	4000 h [2]	2000 h	2000 h [2]
	280	2	4000	2000	4000	2000
		4,	8000	4000	8000	4000
	315, 355	2	3000 h	1500 h [2]	3000 h	1500 h [2]
		4, 6	6000 h	3000 h [2]	6000 h	3000 h [2]
	400	2	4000 h	2000 h	4000 h	2000 h
		4 … 8	6000 h	3000 h	6000 h	3000 h
	450	2	3000 h	1500 h	3000 h	1500 h
		4 … 8	6000 h	3000 h	6000 h	3000 h

Bearing selection table for 1LE10, 1MB10, and 1PC10 motors – basic version

The bearing selection tables are only intended for planning purposes. Authoritative information on the actual type of bearings fitted in motors already supplied can be obtained by the factory by quoting the serial number or can be read from the rating plate.

When deep-groove bearings with side plates are used, the side plate is on the inside. Located bearing at drive end (DE) for 1LE1, 1MB1 and 1PC1 motors, see special version Fig. 2 in the "Diagrams of bearings" on page 1/74.

Frame size	No. of poles	Drive end (DE) bearing Horizontal and vertical types of construction	Non-drive end (NDE) bearing Horizontal and vertical types of construction	Fig. No. on page 1/74
1LE10/1MB10				
63	2 … 6	6201 2ZC3	6201 2ZC3	–
71	2 … 8	6202 2ZC3	6202 2ZC3	–
80	2 … 8	6004 2ZC3	6004 2ZC3	**Fig. 1**
90	2 … 8	6205 2ZC3	6004 2ZC3	**Fig. 1**
1LE10/1MB10/1PC10				
100 L	2 … 8	6206 2ZC3	6206 2ZC3	**Fig. 1**
112 M	2 … 8	6206 2ZC3	6206 2ZC3	**Fig. 1**
132 S/M	2 … 8	6208 2ZC3 [4]	6208 2ZC3 [4]	**Fig. 1**
160 M/L	2 … 8	6209 2ZC3 [4]	6209 2ZC3 [4]	**Fig. 2**
1LE10				
180 M/L	2 … 8	6210 2ZC3 [5]	6210 2ZC3 [5]	**Fig. 4**
200 L	2 … 8	6212 2ZC3 [5]	6212 2ZC3 [5]	**Fig. 4**

1) For special uses and special greases, please inquire about grease lifetime and regreasing intervals.
2) For every 10 K the coolant temperature is increased above 80 °C, the grease lifetime and regreasing interval are halved.
3) 40 000 hours apply to horizontally installed motors with coupling output without additional axial loads.
4) Deep-groove bearings with a side plate are used for regreasable versions (**L23**).
5) Deep-groove bearings without a side plate are used for regreasable versions (**L23**).

© Innomotics 2024

Overview

Bearing selection table for 1LE10, 1MB10, and 1PC10 motors – bearings for increased cantilever forces – order code L22

Please inquire about noise and vibration data. The bearing selection tables are only intended for planning purposes. Authoritative information on the actual type of bearings fitted in motors already supplied can be obtained by the factory by quoting the serial number or can be read from the rating plate.
When deep-groove bearings with side plates are used, the side plate is on the inside.

Frame size	No. of poles	Drive end (DE) bearing Horizontal and vertical types of construction	Non-drive end (NDE) bearing Horizontal and vertical types of construction	Fig. No. on page 1/74
1LE10/1MB10				
80	2 ... 8	6304 2ZC3	6204 2ZC3	–
90	2 ... 8	6305 2ZC3	6204 2ZC3	–
1LE10/1MB10/1PC10				
100 L	2 ... 8	6306 2ZC3	6206 2ZC3	**Fig. 1**
112 M	2 ... 8	6306 2ZC3	6206 2ZC3	
132 S/M	2 ... 8	6308 2ZC3 [1]	6208 2ZC3 [1]	
160 M/L	2 ... 8	6309 2ZC3 [1]	6209 2ZC3 [1]	**Fig. 2**
1LE10				
180 M/L	2 ... 8	6310 2ZC3 [2]	6210 2ZC3 [2]	**Fig. 4**
200 L	2 ... 8	6312 2ZC3 [2]	6212 2ZC3 [2]	**Fig. 4**

Bearing selection table for 1LE10, 1MB10, and 1PC10 motors – bearings reinforced at both ends – order code L25

Please inquire about noise and vibration data. The bearing selection tables are only intended for planning purposes. Authoritative information on the actual type of bearings fitted in motors already supplied can be obtained by the factory by quoting the serial number or can be read from the rating plate.
When deep-groove bearings with side plates are used, the side plate is on the inside.

Frame size	No. of poles	Drive end (DE) bearing Horizontal and vertical types of construction	Non-drive end (NDE) bearing Horizontal and vertical types of construction	Fig. No. on page 1/74
1LE10/1MB10				
80	2 ... 8	6304 2ZC3	6304 2ZC3	–
90	2 ... 8	6305 2ZC3	6304 2ZC3	–
1LE10/1MB10/1PC10				
100 L	2 ... 8	6306 2ZC3	6306 2ZC3	**Fig. 1**
112 M	2 ... 8	6306 2ZC3	6306 2ZC3	
132 S/M	2 ... 8	6308 2ZC3 [2]	6308 2ZC3 [1]	
160 M/L	2 ... 8	6309 2ZC3 [1]	6309 2ZC3 [1]	**Fig. 2**
1LE10				
180 M/L	2 ... 8	6310 2ZC3 [2]	6310 2ZC3 [2]	**Fig. 4**
200 L	2 ... 8	6312 2ZC3 [2]	6312 2ZC3 [2]	**Fig. 4**

Bearing assignment for 1LE15/1MB15, 1LE16/1MB16, and 1LE5 motors (basic version)

Frame size	No. of poles	Drive end (DE) bearing Horizontal and vertical type of construction	Non-drive end (NDE) bearing Horizontal and vertical type of construction	Fig. No. on page 1/74
1LE15, 1MB15 – Basic Line				
71 M	2 ... 8	6202 2ZC3	6202 2ZC3	**Fig. 1**
80 M	2 ... 8	6204 2ZC3	6204 2ZC3	**Fig. 1**
90 S/L	2 ... 8	6205 2ZC3	6204 2ZC3	**Fig. 1**
100 L	2 ... 8	6206 2ZC3 [1]	6206 2ZC3 [1]	**Fig. 1**
112 M	2 ... 8	6206 2ZC3 [1]	6206 2ZC3 [1]	
132 S/M	2 ... 8	6208 2ZC3 [1]	6208 2ZC3 [1]	
160 M/L	2 ... 8	6209 2ZC3 [1]	6209 2ZC3 [1]	**Fig. 2**
180 M/L	2 ... 8	6210 2ZC3 [2]	6210 2ZC3 [2]	**Fig. 4**
200 L	2 ... 8	6212 2ZC3 [2]	6212 2ZC3 [2]	
225 S/M	2 ... 8	6213 ZC3 [2]	6213 ZC3 [2]	**Fig. 1**
250 M	2 ... 8	6215 ZC3 [2]	6215 ZC3 [2]	
280 S/M	2	6315 C3	6315 C3	**Fig. 8**
	4 ... 8	6317 C3	6317 C3	
315 S/M/L	2	6316 C3	6316 C3	
	4 ... 8	6319 C3	6319 C3	

[1] Deep-groove bearings with a side plate are used for regreasable versions (**L23**).

[2] Deep-groove bearings without a side plate are used for regreasable versions (**L23**).

© Innomotics 2024

Overview

Bearing assignment for 1LE15/1MB15, 1LE16/1MB16, and 1LE5 motors (basic version)

Frame size	No. of poles	Drive end (DE) bearing Horizontal and vertical type of construction		Non-drive end (NDE) bearing Horizontal and vertical type of construction		Fig. No. on page 1/74
1LE16, 1MB16 – Performance Line						
100 L	2 ... 8	6306 2ZC3		6306 2ZC3		**Fig. 1**
112 M	2 ... 8	6306 2ZC3		6306 2ZC3		
132 S/M	2 ... 8	6308 2ZC3		6308 2ZC3		
160 M/L	2 ... 8	6309 ZC3		6309 ZC3		**Fig. 2**
180 M/L	2 ... 8	6310 C3		6310 C3		**Fig. 4**
200 L	2 ... 8	6312 C3		6312 C3		
225 S/M	2 ... 8	6313 C3		6313 C3		**Fig. 4**
250 M	2 ... 8	6315 C3		6315 C3		
280 S/M	2	6315 C3		6315 C3		**Fig. 8**
	4 ... 8	6317 C3		6317 C3		
315 S/M/L	2	6316 C3		6316 C3		
	4 ... 8	6319 C3		6319 C3		
		Type of construction Horizontal	Vertical	Type of construction Horizontal	Vertical	
1LE5, 1MB5						
225 S, M	2 ... 8	6213 Z C3	6213 Z C3	6213 Z C3	6213 Z C3	**Fig. 4**
250 M	2 ... 8	6214 ZC3	6214 ZC3	6214 ZC3	6214 ZC3	
280 S, M	2	6315 C3 S0	6315 C3 S0	6315 C3 S0	6315 C3 S0	**Fig. 8**
	4 ... 8	6316 C3 S0	6316 C3 S0	6316 C3 S0	6316 C3 S0	
315 L	2	6316 C3[1)]/C4[2)]	6316 C3[1)]/C4[2)]	6316 C3[1)]/C4[2)]	6316 C3[1)]/7316 B[2)]	**Fig. 9, Fig. 10**
	4 ... 8	6319 C3[1)]/C4[2)]	6319 C3[1)]/C4[2)]	6319 C3[1)]/C4[2)]	6319 C3[1)]/7319 B[2)]	
355 M/L	2	6317 C4	6317 C4	6317 C4	7317 BEP	
	4 ... 8	6320 C4	6320 C4	6320 C4	7320 BEP	
400	2	6218 C3	7218 B + 6218 C3	6218 C3	6218 C3	**Fig. 6, Fig. 7**
	4 ... 8	6224 C3	7224 B + 6224 C3	6224 C3	6224 C3	**Fig. 6, Fig. 7**
450	2	6220 C3	–	6220 C3	–	**Fig. 6**
	4 ... 8	6226 C3	7226 B + 6226 C3	6226 C3	6226 C3	**Fig. 6, Fig. 7**

Bearing assignment for 1MB1/1MB5 motors with types of protection Ex db, Ex db eb (basic version)

Frame size	No. of poles	Drive end (DE) bearing Type of construction Horizontal	Vertical	Non-drive end (NDE) bearing Type of construction Horizontal	Vertical	Fig. No. on page 1/74
1MB1, 1MB5 with type of protection Ex db, Ex db eb						
71	2 ... 8	6202-2Z C3	6202-2Z C3	6202-2Z C3	6202-2Z C3	–
80	2 ... 8	6204-2Z C3	6204-2Z C3	6204-2Z C3	6204-2Z C3	–
90	2 ... 8	6205-2Z C3	6205-2Z C3	6205-2Z C3	6205-2Z C3	–
100	2 ... 8	6306-2Z C3	6306-2Z C3	6306-2Z C3	6306-2Z C3	–
112	2 ... 8	6306-2Z C3	6306-2Z C3	6306-2Z C3	6306-2Z C3	–
132	2 ... 8	6308-2Z C3	6308-2Z C3	6308-2Z C3	6308-2Z C3	–
160	2 ... 8	6309 C3	6309 C3	6309 C3	6309 C3	–
180	2 ... 8	6310 C3	6310 C3	6310 C3	6310 C3	–
200	2 ... 8	6312 C3	6312 C3	6312 C3	6312 C3	–
225	2 ... 8	6313 C3	6313 C3	6313 C3	6313 C3	–
250	2 ... 8	6315 C3	6315 C3	6315 C3	6315 C3	–
280	2	6315 C3	6315 C3	6315 C3	6315 C3	–
280	4 ... 8	6317 C3	6317 C3	6317 C3	6317 C3	–
315	2	6316 C3	6319 C3	6316 C3	6319 C3	–
315	4 ... 8	6319 C4	6319 C4	6319 C4	6319 C4	–
355	2	6317 C4	6320 C4	6317 C4	6320 C4	–
355	4 ... 8	6320 C4	6320 C4	6320 C4	6320 C4	–

1) Only for frame size 315 if 11th position of Article No. for all poles 0, 2, 4, 5; for 6-, 8-pole motors 6.

2) Only for frame size 315 if 11th position of Article No. for 2-, 4-pole motors 6, 7, for 6-, 8-pole motors 7, 8.

© Innomotics 2024

Overview

Bearing selection table for 1LE15, 1MB15, 1LE16, and 1MB16 motors (bearings for increased cantilever forces – order code L22)

1

For NU bearings (cylindrical roller bearings), in contrast to ball bearings, a minimum cantilever force is required. Cylindrical roller bearings are not suitable for coupling output or for brief periods of no-load operation without cantilever forces.

$F_{min} \sim F_{max}/2$

Frame size	No. of poles	Drive end (DE) bearing Horizontal and vertical type of construction	Non-drive end (NDE) bearing Horizontal and vertical type of construction	Fig. No. on page 1/74
1LE15/1MB15 – Basic Line				
71 M	2 ... 8	6302 2ZC3	6202 2ZC3 [3]	
80 M	2 ... 8	6304 2ZC3	6204 2ZC3 [3]	
90 S/L	2 ... 8	6305 2ZC3	6204 2ZC3	
100 L	2 ... 8	6306 2ZC3 [1]	6206 2ZC3 [1][3]	
112 M	2 ... 8	6306 2ZC3 [1]	6206 2ZC3 [1][3]	
132 M	2 ... 8	6308 2ZC3 [1]	6208 2ZC3 [1][3]	
160 M/L	2 ... 8	6309 2ZC3 [1]	6209 2ZC3 [1][3]	
180 M/L	2 ... 8	NU 210	6210 2ZC3 [4]	**Fig. 5**
200 L	2 ... 8	NU 212	6212 2ZC3 [4]	
225 M	2 ... 8	NU 213	6213 C3	
250 M	2 ... 8	NU 215	6215 C3	
280 M	2	NU 315	6315 C3 [3]	
	4 ... 8	NU 317	6317 C3 [3]	
315 M/L	2	NU 316	6316 C3 [3]	
	4 ... 8	NU 319	6319 C3 [3]	
1LE16/1MB16 – Performance Line				
100 L	2 ... 8	[2]		
112 M	2 ... 8	[2]		
132 M	2 ... 8	[2]		
160 M/L	2 ... 8	[2]		
180 M/L	2 ... 8	NU 310	6310 C3 [3]	
200 L	2 ... 8	NU 312	6312 C3 [3]	
225 M	2 ... 8	NU 313	6313 C3 [3]	**Fig. 5**
250 M	2 ... 8	NU 315	6315 C3 [3]	
280 M	2	NU 315	6315 C3 [3]	
	4 ... 8	NU 317	6317 C3 [3]	
315 M/L	2	NU 316	6316 C3 [3]	
	4 ... 8	NU 319	6319 C3 [3]	

		Type of construction		Type of construction		
		Horizontal	Vertical	Horizontal	Vertical	
1LE5, 1MB5						
225 S, M	2 ... 8	NU213	NU213	6213 ZC3	6213 ZC3	**Fig. 5**
250 M	2 ... 8	NU214	NU214	6214 ZC3	6214 ZC3	
280 S, M	2	NU315	NU315	6315 C3	6315 C3	
	4 ... 8	NU316	NU316	6315 C3	6315 C3	
315 L	2	NU316	NU316	6316 C3[5]/C4[6]	O. R.	
	4 ... 8	NU319	NU319	6319 C3[5]/C4[6]	O. R.	
355 M/L	2	NU317	NU317	6317 C4	O. R.	
	4 ... 8	NU320	NU320	6320 C4	O. R.	
400	2	O. R.	–	O. R.	–	–
	4 ... 8	O. R.	O. R.	O. R.	O. R.	–
450	2	O. R.	–	O. R.	–	–
	4 ... 8	O. R.	O. R.	O. R.	O. R.	–

1) Deep-groove bearings with a side plate are used for regreasable versions (**L23**).
2) Not permitted.
3) As for basic version.
4) Deep-groove bearings without a side plate are used for regreasable versions (**L23**).
5) Only for frame size 315 if 11th position of Article No. for all poles 0, 2, 4, 5; for 6-, 8-pole motors 6.
6) Only for frame size 315 if 11th position of Article No. for 2-, 4-pole motors 6, 7, for 6-, 8-pole motors 7, 8.

© Innomotics 2024

Overview

Bearing assignment for 1MB1/1MB5 motors with types of protection Ex db, Ex db eb (bearings for increased cantilever forces – order code L22)

For NU bearings (cylindrical roller bearings), in contrast to ball bearings, a minimum cantilever force is required. Cylindrical roller bearings are not suitable for coupling output.

$F_{min} \sim F_{max}/2$

Frame size	No. of poles	Drive end (DE) bearing Type of construction Horizontal	Vertical	Non-drive end (NDE) bearing Type of construction Horizontal	Vertical	Fig. No. on page 1/74
1MB1, 1MB5 with type of protection Ex db, Ex db eb						
160	2 … 8	NU309	NU309	6309 C3	6309 C3	–
180	2 … 8	NU310	NU310	6310 C3	6310 C3	–
200	2 … 8	NU312	NU312	6312 C3	6312 C3	–
225	2 … 8	NU313	NU313	6313 C3	6313 C3	–
250	2 … 8	NU315	NU315	6315 C3	6315 C3	–
280	2	NU315	NU315	6315 C3	6315 C3	–
280	4 … 8	NU317	NU317	6317 C3	6317 C3	–
315	2	NU316	NU316	6316 C3	6319 C3	–
315	4 … 8	NU319	NU319	6319 C3	6319 C3	–
355	2	NU317	NU317	6317 C4	6320 C4	–
355	4 … 8	NU320	NU320	6320 C4	6320 C4	–

Bearing assignment for 1LE15/1MB15 and 1LE16/1MB16 motors and 1LE5 motors (bearings reinforced at both ends – order code L25, for 1LE16 motors – standard)

Frame size	No. of poles	Drive end (DE) bearing Horizontal and vertical type of construction	Non-drive end (NDE) bearing Horizontal and vertical type of construction	Fig. No. on page 1/74
1LE15, 1MB15 – Basic Line				
71 M	2 … 8	6302 2ZC3	6302 2ZC3	
80 M	2 … 8	6304 2ZC3	6304 2ZC3	
90 S/L	2 … 8	6305 2ZC3	6304 2ZC3	
100 L	2 … 8	6306 2ZC3 [1]	6306 2ZC3 [1]	
112 M	2 … 8	6306 2ZC3 [1]	6306 2ZC3 [1]	
132 M	2 … 8	6308 2ZC3 [1]	6308 2ZC3 [1]	
160 M/L	2 … 8	6309 2ZC3 [1]	6309 2ZC3 [1]	
180 M/L	2 … 8	6310 2ZC3 [3]	6310 2ZC3 [3]	
200 L	2 … 8	6312 2ZC3 [3]	6312 2ZC3 [3]	
225 M	2 … 8	6313 ZC3 [3]	6313 ZC3 [3]	**Fig. 4**
250 M	2 … 8	6315 ZC3 [3]	6315 ZC3 [3]	
280 M	2	6315 C3 [2]	6315 C3 [2]	**Fig. 8**
	4 … 8	6317 C3 [2]	6317 C3 [2]	
315 M/L	2	6316 C3 [2]	6316 C3 [2]	
	4 … 8	6319 C3 [2]	6319 C3 [2]	
1LE16, 1MB16 – Performance Line – bearing version as for Performance Line basic version				
		Type of construction Horizontal / Vertical	Type of construction Horizontal / Vertical	
1LE5				
225 S/M	2 … 8	6313 ZC3 / 6313 ZC3	6313 ZC3 / 6313 ZC3	**Fig. 4**
250 M	2 … 8	6314 ZC3 / 6314 ZC3	6314 ZC3 / 6314 ZC3	
280 S/M	2	6315 C3 / 6315 C3	6315 C3 / 6315 C3	**Fig. 8**
	4 … 8	6316 C3 / 6316 C3	6316 C3 / 6316 C3	
315 L	2	6316 C3 / 6316 C3	6316 C3 / 6316 C3	**Fig. 9, Fig. 10**
	4 … 8	6319 C3 / 6319 C3	6319 C3 / 6319 C3	
355 M/L	2	6317 C4 / 6317 C4	6317 C4 / 7317 BEP	
	4 … 8	6320 C4 / 6320 C4	6320 C4 / 7320 BEP	
400	2	O. R. / O. R.	O. R. / O. R.	**Fig. 6, Fig. 7**
	4 … 8	6326 C3 / O. R.	6326 C3 / O. R.	
450	2	O. R. / –	O. R. / –	**Fig. 6**
	4 … 8	6326 C3 / O. R.	6326 C3 / O. R.	**Fig. 6, Fig. 7**

[1] Deep-groove bearings with a side plate are used for regreasable versions (**L23**).
[2] As for basic version.
[3] Deep-groove bearings without a side plate are used for regreasable versions (**L23**).

© Innomotics 2024

Introduction

Bearings and lubrication

1

Overview

Diagrams of bearings

Fig. 1 Drive-end bearing Non-drive end bearing

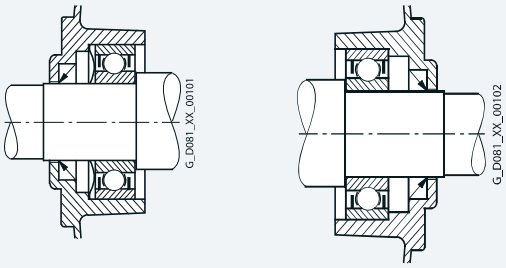

Fig. 2 Drive-end bearing Non-drive end bearing

Located bearings for 1LE1 and 1MB1 frame size 160

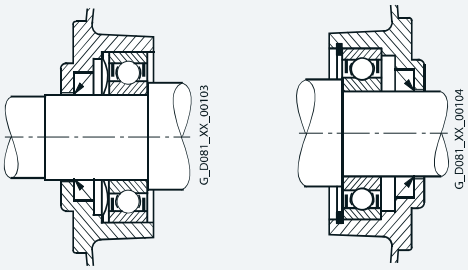

Fig. 3 Drive-end bearing Non-drive end bearing

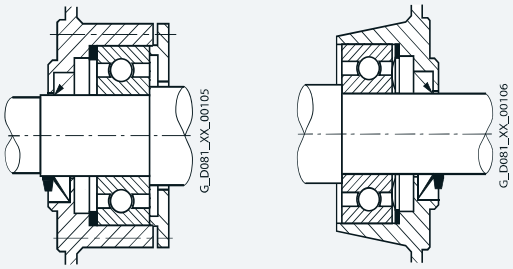

Fig. 4 Drive-end bearing Non-drive end bearing

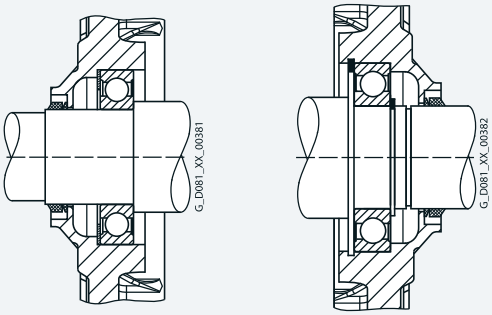

Fig. 5 Drive-end bearing Non-drive end bearing

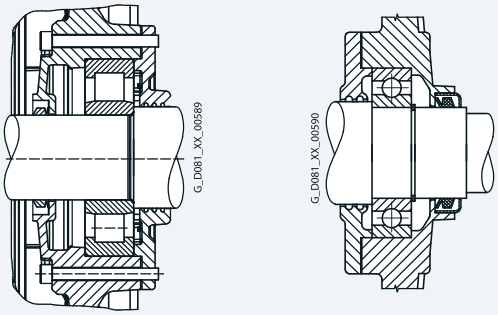

Fig. 6 Drive-end bearing Non-drive end bearing

Frame sizes 400 and 450, 2-pole to 8-pole, type of construction IM B3

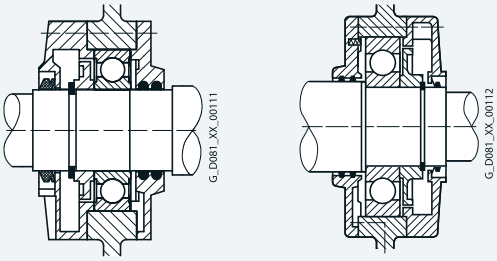

Fig. 7 Drive-end bearing Non-drive end bearing

Frame sizes 400 and 450, 2-pole to 8-pole, type of construction IM V1

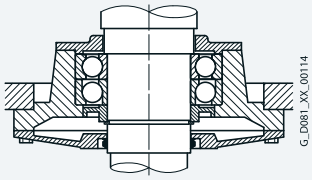

Frame sizes 400 and 450, 2-pole to 8-pole, type of construction IM V1

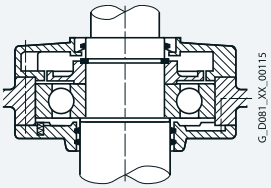

© Innomotics 2024

Ovberview

Diagrams of bearings

Fig. 8 Drive-end bearing Non-drive end bearing
Frame size 280 and 315

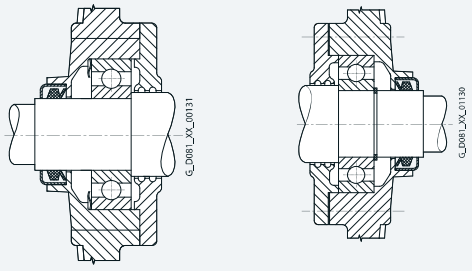

Fig. 9 Drive-end bearing Non-drive end bearing
Frame sizes 315 and 355,
Type of construction IM B3/IM B5

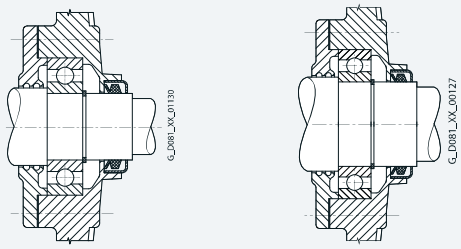

Fig. 10 Drive-end bearing Non-drive end bearing
Frame sizes 315 and 355, 2- and 4-pole, type of construction IM V1

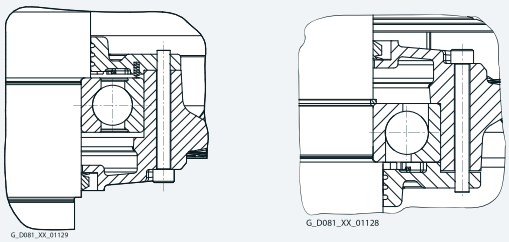

© Innomotics 2024

1

Overview

Admissible cantilever forces

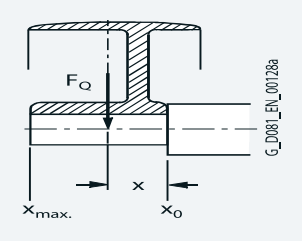

In order to calculate the admissible cantilever forces for a radial load, the line of force (i.e. the centerline of the pulley) of the cantilever force F_Q (N) must be within the free shaft extension (dimension x).

Dimension x (mm) is the distance between the point of application of the force F_Q and the shaft shoulder. The dimension x_{max} corresponds to the length of the shaft extension.

Total cantilever force $F_Q = c \cdot F_u$

The pre-tension factor c is a value gained from experience from the belt manufacturer. The following approximate value can be assumed:

For normal flat leather belts with an idler pulley c = 2;
for V-belts c = 2 to 2.5;
for special synthetic belts (depending on the type of load and type of belt) c = 2 to 2.5.

The circumferential force F_u (N) is calculated using the following equation

$$F_u = 2 \cdot 10^7 \cdot \frac{P}{n \cdot D}$$

F_u circumferential force in N
P rated motor power (transmitted power) in kW
n rated motor speed in rpm
D belt pulley diameter in mm

Admissible cantilever forces – basic version

1LE10, 1MB10 motors (frame sizes 80 ... 160) and 1PC10 (frame sizes 100 ... 160) at 50 Hz
Valid are: x_0 values for x = 0 and $x_{max.}$ values for x = l (l = shaft extension)

For motors			Admissible cantilever force F_Q	
			at x_0	at $x_{max.}$
Frame size	Type	No. of poles	N	N
1LE1 motors – values for motors with increased power [1]				
80	**1LE10..-0DA**	2	485	400
	1LE10..-0DB	4	625	515
	1LE10..-0DC	6	735	605
90	**1LE10..-0EA**	2	725	605
	1LE10..-0EB	4	920	775
	1LE10..-0EC	6	1090	910
100	**1LE10..-1AA**	2	1010	825
	1LE10..-1AB	4	1230	1010
	1LE10..-1AC	6	1440	1180
112	**1LE10..-1BA**	2	970	785
	1LE10..-1BB	4	1235	1000
	1LE10..-1BC	6	1440	1165
132	**1LE10..-1CA**	2	1470	1180
	1LE10..-1CB	4	1830	1470
	1LE10..-1CC	6	2150	1730
160	**1LE10..-1DA**	2	1550	1270
	1LE10..-1DB	4	1910	1550
	1LE10..-1DC	6	2230	1810
1LE1 motors – standard values [1] **1MB1 motors – standard values [1]** **1PC1 motors – standard values [1]**				
63	**1LE10..-0BA**	2	270	240
	1LE10..-0BB	4	350	305
71	**1LE10..-0CA**	2	415	355
	1LE10..-0CB	4	530	450
80	**1LE10..-0DA** **1MB10..-0DA** **1PC10..-0DA**	2	485	400
	1LE10..-0DB **1MB10..-0DB** **1PC10..-0DB**	4	625	515
	1LE10..-0DC **1MB10..-0DC** **1PC10..-0DC**	6	735	605
	1LE10..-0DD **1PC10..-0DD**	8	815	675
90	**1LE10..-0EA** **1MB10..-0EA** **1PC10..-0EA**	2	725	605
	1LE10..-0EB **1MB10..-0EB** **1PC10..-0EB**	4	920	775
	1LE10..-0EC **1MB10..-0EC** **1PC10..-0EC**	6	1090	910
	1LE10..-0ED **1PC10..-0ED**	8	1230	1030

Note:
1PC10 only for frame sizes 100 to 160.

In the case of cantilever forces that exceed this, see "Bearings for increased cantilever forces".

[1] For IE1 motors, the admissible cantilever force can be increased by up to 5 %.

© Innomotics 2024

Overview

1LE10, 1MB10 motors (frame sizes 80 ... 160) and 1PC10 (frame sizes 100 ... 160) at 50 Hz
Valid are: x_0 values for x = 0 and $x_{max.}$ values for x = l (l = shaft extension)

For motors			Admissible cantilever force F_Q	
			at x_0	at $x_{max.}$
Frame size	Type	No. of poles	N	N
1LE1 motors – standard values [1] 1MB1 motors – standard values [1] 1PC1 motors – standard values [1]				
100	**1LE10..-1AA 1MB10..-1AA 1PC10..-1AA**	2	1020	815
	1LE10..-1AB 1MB10..-1AB 1PC10..-1AB	4	1250	1000
	1LE10..-1AC 1MB10..-1AC 1PC10..-1AC	6	1450	1155
	1LE10..-1AD 1MB10..-1AD 1PC10..-1AD	8	1615	1290
112	**1LE10..-1BA 1MB10..-1BA 1PC10..-1BA**	2	1000	790
	1LE10..-1BB 1MB10..-1BB 1PC10..-1BB	4	1250	990
	1LE10..-1BC 1MB10..-1BC 1PC10..-1BC	6	1450	1150
	1LE10..-1BD 1MB10..-1BD 1PC10..-1BD	8	1610	1275
132	**1LE10..-1CA 1MB10..-1CA 1PC10..-1CA**	2	1505	1170
	1LE10..-1CB 1MB10..-1CB 1PC10..-1CB	4	1880	1460
	1LE10..-1CC 1MB10..-1CC 1PC10..-1CC	6	2170	1680
	1LE10..-1CD 1MB10..-1CD 1PC10..-1CD	8	2420	1880
160	**1LE10..-1DA 1MB10..-1DA 1PC10..-1DA**	2	1560	1240
	1LE10..-1DB 1MB10..-1DB 1PC10..-1DB	4	2040	1590
	1LE10..-1DC 1MB10..-1DC 1PC10..-1DC	6	2350	1820
	1LE10..-1DD 1MB10..-1DD 1PC10..-1DD	8	2610	2030
180	**1LE10..**	2	1670	1380
		4	2150	1740
		6	2500	2000
200	**1LE10..**	2	2460	2070
		4	3180	2630
		6	3600	2980

1LE15, 1MB15 [1], 1LE55, and 1MB55 motors [2] at 50 Hz
Valid are: x_0 values for x = 0 and x_{max} values for x = l (l = shaft extension)

For motors		Admissible cantilever force	
		at x_0	at x_{max}
Frame size	No. of poles	N	N
1LE1501/03/21/23, 1MB15 – Basic Line			
71	2	400	340
	4	500	420
	6	570	490
80	2	680	570
	4	860	720
	6	980	820
90	2	760	620
	4	950	790
	6	1090	900
100	2	1010	815
	4	1230	1000
	6	1440	1155
	8	1615	1290
112	2	970	785
	4	1235	990
	6	1440	1150
	8	1610	1275
132	2	1470	1170
	4	1830	1460
	6	2150	1680
	8	2420	1880
160	2	1550	1240
	4	1910	1550
	6	2230	1810
	8	2610	2030
180	2	1670	1380
	4	2150	1740
	6	2500	2000
200	2	2460	2070
	4	3180	2630
	6	3600	2980
225	2	2850	2300
	4	3550	2800
	6	4050	3240
	8	4500	3500
250	2	3250	2600
	4	4100	3400
	6	4800	4000
	8	5250	4450
280	2	5200	4200
	4	8500	7000
	6	9800	8150
	8	10800	9000
315 S/M	2	5300	4500
	4	9150	7400
	6	10750	8750
	8	11600	9600
315 L	2	4900	4300
	4	8900	7700
	6	10100	9150
	8	11100	10200

In the case of cantilever forces that exceed this, see "Bearings for increased cantilever forces".

[1] For IE1 motors, the admissible cantilever force can be increased by up to 5 %.

[2] Not valid for 1MB.55 motors with type of protection Ex db eb.

© Innomotics 2024

Overview

1LE16, 1MB16, 1LE56, and 1MB56 motors at 50 Hz
Valid are: x_0 values for x = 0 and x_{max} values for x = l (l = shaft extension)

For motors		Admissible cantilever force	
		at x_0	at x_{max}
Frame size	No. of poles	N	N
1LE1601/03/21/23, 1MB16 – Performance Line			
100	2	1585	1270
	4	1960	1575
	6	2270	1815
	8	2520	2015
112	2	1545	1240
	4	1960	1555
	6	2270	1800
	8	2510	1990
132	2	2285	1795
	4	2860	2250
	6	3320	2580
	8	3700	2870
160	2	2800	2170
	4	3450	2750
	6	4000	3160
	8	4510	3500
180	2	3250	2610
	4	4110	3270
	6	4720	3740
200	2	4320	3550
	4	5480	4500
	6	6220	5110
225	2	5000	4150
	4	6250	4900
	6	7200	5750
	8	7800	6200
250	2	6000	4800
	4	7600	6200
	6	8750	7350
	8	9500	8000
280	2	5200	4200
	4	8500	7000
	6	9800	8150
	8	10800	9000
315 S/M	2	5300	4500
	4	9150	7400
	6	10750	8750
	8	11600	9600
315 L	2	4900	4300
	4	8900	7700
	6	10100	9150
	8	11100	10200

1LE55, and 1MB55 motors [1] at 50 Hz
Valid are: x_0 values for x = 0 and x_{max} values for x = l (l = shaft extension)

For motors		Admissible cantilever force	
		at x_0	at x_{max}
Frame size	No. of poles	N	N
1LE5504/34/03/33, 1MB55			
225	2 (2BA2)	2900	2350
	2 (2BA6)	2850	2300
	4 (2BB0)	3700	2950
	4 (2BB2)	3600	2900
	4 (2BB6)	3550	2800
	6 82BC2)	4100	3300
	6 (2BC6)	4050	3240
	8 (2BD0)	4700	3700
	8 (2BD2)	4600	3600
	8 (2BD6)	4500	3500
250	2	3200	2600
	4	4000	3250
	6	4600	3800
	8	5250	4200
280 S/M	2	5300	4200
	4	8600	7700
	6	10000	8250
	8	11200	9300
315 L	2	5800	5200
	4	9300	8000
	6	10600	9200
	8	12000	9200
400	2	2910	2570
	4	6830	5870
	6	6520	5610
	8	7860	6760
450	2	3820	3410
	4	7130	6220
	6	6970	6080
	8	8110	7070

1LE56, and 1MB56 motors at 50 Hz
Valid are: x_0 values for x = 0 and x_{max} values for x = l (l = shaft extension)

For motors		Admissible cantilever force	
		at x_0	at x_{max}
Frame size	No. of poles	N	N
1LE5604/34/03/33, 1MB56 – Performance line			
315 L	2	5800	5200
	4	9300	8000
	6	10600	9200
	8	12000	9200
355 M/L	2	5800	5200
	4	9900	8700
	6	11200	9800
	8	11200	10000

In the case of cantilever forces that exceed this, see "Bearings for increased cantilever forces".

[1] Not valid for 1MB.55 motors with type of protection Ex db eb.

© Innomotics 2024

Overview

1MB1, 1MB5 motors for types of protection Ex db and Ex db eb at 50 Hz
Valid are: x_0 values for x = 0, $x_{0.5}$ for x = 0.5 x l and x_{max} values for x = l (l = shaft extension)

For motors		Admissible cantilever force		
		at x_0	at $x_{0.5}$	at x_{max}
Frame size	No. of poles	N	N	N
1MB1/1MB5 – for types of protection Ex db and Ex db eb				
71	2	360	340	300
	4	410	380	300
	6	490	390	300
	8	530	390	300
80	2	570	530	420
	4	700	570	430
	6	800	580	430
	8	810	560	420
90	2	520	480	440
	4	660	660	490
	6	850	690	510
	8	940	700	520
100	2	1340	1110	830
	4	1620	1110	820
	6	1690	1120	830
	8	1550	1030	760
112	2	1300	1150	860
	4	1630	1300	970
	6	1800	1190	880
	8	1820	1200	890
132	2	1980	1790	1420
	4	2460	1830	1290
	6	2810	1880	1330
	8	3050	2000	1420
160	2	2770	2510	1950
	4	3430	2850	1940
	6	3700	3290	2230
	8	4300	2570	1750
180	2	3070	2800	2570
	4	3780	3440	2880
	6	4380	3990	2940
	8	4860	4430	3700
200	2	3960	3640	3360
	4	5010	4610	4260
	6	5630	5170	4390
	8	6190	5690	5250
225	2	4500	4170	3890
	4	5590	5090	4660
	6	6260	5690	5220
	8	7230	6580	4770
250	2	5430	4930	4510
	4	6720	6100	5580
	6	7650	6950	6360
	8	8720	7920	6250
280	2	4690	4330	4000
	4	7430	6580	6330
	6	8940	8240	7070
	8	8860	8170	6790
315 S/M	2	6000	5500	5100
	4	8300	7360	5530
	6	9280	6910	4780
	8	9210	5700	4120
315 L	2	3600	3400	3200
	4	5350	4920	4030
	6	6830	5800	4210
	8	8600	5350	3880
355	2	3550	3450	2400
	4	3930	3570	2610
	6	O. R.	O. R.	O. R.
	8	O. R.	O. R.	O. R.

Admissible cantilever forces – bearings for increased cantilever forces – order code **L22**

1LE10, 1MB10 motors (frame sizes 80 ... 160) and 1PC10 (frame sizes 100 ... 160) at 50 Hz with reinforced deep-groove bearings at DE
Valid are: x_o values for x = 0 and x_{max} values for x = l (l = shaft extension)

For motors			Admissible cantilever force F_Q	
			at x_0	at x_{max}
Frame size	Type	No. of poles	N	N
1LE1 motors – values for motors with increased power [1]				
100	**1LE10..-1AA**	2	1585	1300
	1LE10..-1AB	4	1960	1610
	1LE10..-1AC	6	2270	1865
112	**1LE10..-1BA**	2	1545	1250
	1LE10..-1BB	4	1960	1585
	1LE10..-1BC	6	2270	1835
132	**1LE10..-1CA**	2	2285	1840
	1LE10..-1CB	4	2860	2300
	1LE10..-1CC	6	3320	2670
160	**1LE10..-1DA**	2	2800	2240
	1LE10..-1DB	4	3450	2270
	1LE10..-1DC	6	4000	3200
1LE1 motors – standard values [1] **1MB1 motors – standard values [1]** **1PC1 motors – standard values [1]**				
100	**1LE10..-1AA** **1MB10..-1AA** **1PC10..-1AA**	2	1585	1270
	1LE10..-1AB **1MB10..-1AB** **1PC10..-1AB**	4	1960	1575
	1LE10..-1AC **1MB10..-1AC** **1PC10..-1AC**	6	2270	1815
	1LE10..-1AD **1MB10..-1AD** **1PC10..-1AD**	8	2520	2015
112	**1LE10..-1BA** **1MB10..-1BA** **1PC10..-1BA**	2	1545	1240
	1LE10..-1BB **1MB10..-1BB** **1PC10..-1BB**	4	1960	1555
	1LE10..-1BC **1MB10..-1BC** **1PC10..-1BC**	6	2270	1800
	1LE10..-1BD **1MB10..-1BD** **1PC10..-1BD**	8	2510	1990
132	**1LE10..-1CA** **1MB10..-1CA** **1PC10..-1CA**	2	2285	1795
	1LE10..-1CB **1MB10..-1CB** **1PC10..-1CB**	4	2860	2250
	1LE10..-1CC **1MB10..-1CC** **1PC10..-1CC**	6	3320	2580
	1LE10..-1CD **1MB10..-1CD** **1PC10..-1CD**	8	3700	2870
160	**1LE10..-1DA** **1MB10..-1DA** **1PC10..-1DA**	2	2800	2170
	1LE10..-1DB **1MB10..-1DB** **1PC10..-1DB**	4	3450	2750
	1LE10..-1DC **1MB10..-1DC** **1PC10..-1DC**	6	4000	3160
	1LE10..-1DD **1MB10..-1DD** **1PC10..-1DD**	8	4510	3500

[1] For IE1 motors, the admissible cantilever force can be increased by up to 5 %.

© Innomotics 2024

1

Overview

1LE10, 1MB10 motors (frame sizes 80 ... 160) and 1PC10 (frame sizes 100 ... 160) at 50 Hz with reinforced deep-groove bearings at DE

Valid are: x_0 values for x = 0 and x_{max} values for x = l (l = shaft extension)

For motors			Admissible cantilever force F_Q	
			at x_0	at x_{max}
Frame size	Type	No. of poles	N	N
1LE1 motors – standard values [1] 1MB1 motors – standard values [1] 1PC1 motors – standard values [1]				
180	**1LE10..-1EA**	2	3250	2610
		4	4110	3270
		6	4720	3740
		8	5130	4050
200	**1LE10..-2A**	2	4320	3550
		4	5480	4500
		6	6220	5110
		8	6870	5640

1LE15 and 1MB15 [2] motors at 50 Hz with reinforced deep-groove bearings at DE up to frame size 160 with cylindrical roller bearings at DE in frame size 180 and above

Valid are: x_0 values for x = 0 and x_{max} values for x = l (l = shaft extension)

For motors			Admissible cantilever force	
			at x_0	at x_{max}
Frame size	Type	No. of poles	N	N
1LE1501/03/21/23, 1MB15 – Basic Line				
71	**1LE15..-0CA 1MB15..-0CA**	2	400	340
	1LE15..-0CB 1MB15..-0CB	4	490	420
	1LE15..-0CC 1MB15..-0CC	6	570	490
	LE15..-0CD 1MB15..-0CD	8	640	540
80	**1LE15..-0DA 1MB15..-0DA**	2	680	570
	1LE15..-0DB 1MB15..-0DB	4	840	720
	1LE15..-0DC 1MB15..-0DC	6	970	820
	1LE15..-0DD 1MB15..-0DD	8	1090	910
90	**1LE15..-0EA 1MB15..-0EA**	2	720	605
	1LE15..-0EB 1MB15..-0EB	4	920	775
	1LE15..-0EC 1MB15..-0EC	6	1060	910
	1LE15..-0ED 1MB15..-0ED	8	1200	1030
100	**1LE15..-1AA 1MB15..-1AA**	2	1585	1270
	1LE15..-1AB 1MB15..-1AB	4	1960	1575
	1LE15..-1AC 1MB15..-1AC	6	2270	1815
	1LE15..-1AD 1MB15..-1AD	8	2520	2015
112	**1LE15..-1BA 1MB15..-1BA**	2	1545	1240
	1LE15..-1BB 1MB15..-1BB	4	1960	1555
	1LE15..-1BC 1MB15..-1BC	6	2270	1800
	1LE15..-1BD 1MB15..-1BD	8	2510	1990

1LE15 and 1MB15 [2] motors at 50 Hz with reinforced deep-groove bearings at DE up to frame size 160 with cylindrical roller bearings at DE in frame size 180 and above

Valid are: x_0 values for x = 0 and x_{max} values for x = l (l = shaft extension)

For motors			Admissible cantilever force	
			at x_0	at x_{max}
Frame size	Type	No. of poles	N	N
1LE1501/03/21/23, 1MB15 – Basic Line (continued)				
132	**1LE15..-1CA 1MB15..-1CA**	2	2285	1795
	1LE15..-1CB 1MB15..-1CB	4	2860	2250
	1LE15..-1CC 1MB15..-1CC	6	3320	2580
	1LE15..-1CD 1MB15..-1CD	8	3700	2870
160	**1LE15..-1DA 1MB15..-1DA**	2	2800	2170
	1LE15..-1DB 1MB15..-1DB	4	3450	2750
	1LE15..-1DC 1MB15..-1DC	6	4000	3160
	1LE15..-1DD 1MB15..-1DD	8	4510	3500
180	**1LE15..-1EA 1MB15..-1EA**	2	4520	3630
	1LE15..-1EB 1MB15..-1EB	4	5560	4050
	1LE15..-1EC 1MB15..-1EC	6	6280	4050
	1LE15..-1ED 1MB15..-1ED	8	6790	4050
200	**1LE15..-2AA 1MB15..-2AA**	2	6840	5610
	1LE15..-2AB 1MB15..-2AB	4	8440	6000
	1LE15..-2AC 1MB15..-2AC	6	9480	6000
	1LE15..-2AD 1MB15..-2AD	8	10100	6000
225	**1LE15..-2BA 1MB15..-2BA**	2	8000	6800
	1LE15..-2BB 1MB15..-2BB	4	9800	7250
	1LE15..-2BC 1MB15..-2BC	6	11100	7300
	1LE15..-2BD 1MB15..-2BD	8	11300	7300
250	**1LE15..-2CA 1MB15..-2CA**	2	9500	7400
	1LE15..-2CB 1MB15..-2CB	4	12500	9400
	1LE15..-2CC 1MB15..-2CC	6	13500	9700
	1LE15..-2CD 1MB15..-2CD	8	14700	9700
280 [3]	**1LE15..-2DA 1MB15..-2DA**	2	16500	9800
315 [3]	**1LE15..-3AA 1MB15..-3AA**	2	18400	7600

Note: 1PC10 and 1MB10 not for frame sizes 180 to 200.

[1] For IE1 motors, the admissible cantilever force can be increased by up to 5 %.
[2] Not valid for 1MB155 motors with type of protection Ex db eb.
[3] For admissible cantilever forces 4, 6, and 8-pole versions, see diagrams on this page.

© Innomotics 2024

Overview

1LE16 and 1MB16 motors at 50 Hz
with reinforced cylindrical roller bearings DE
Valid are: x_0 values for x = 0 and x_{max} values for x = l (l = shaft extension)

For motors		Admissible cantilever force	
		at x_0	at x_{max}
Frame size	No. of poles	N	N
1LE1601/03/21/23, 1MB16 – Performance Line			
100, 112, 132, 160	2, 4, 6, 8	–	–
180	2	8150	4050
	4	9800	4050
	6	9800	4050
200	2	11200	6000
	4	13600	6000
	6	13600	6000
225	2	12700	7900
	4	15700	7250
	6	15700	7300
	8	15700	7300
250	2	17000	7750
	4	21000	9400
	6	21000	9700
	8	21000	9700
280 [2)]	2	16500	9800
315 S, M [2)]	2	18400	7600
315 L [2)]	2	18400	7600

Admissible cantilever forces – Bearing for increased cantilever forces – For all motors of frame sizes 400 and 450 at 50 Hz in the horizontal and vertical types of construction (order code **L22**) on request. Please specify cantilever force and lever arm.

Admissible cantilever forces – bearings for increased cantilever forces – order code **L22** and **L50**

Motors 1LE15 at 50 Hz
with reinforced cylindrical roller bearings DE
Valid are: x_0 values for x = 0 and x_{max} values for x = l (l = shaft extension)

For motors		Admissible cantilever force	
		at x_0	at x_{max}
Frame size	No. of poles	N	N
1LE15			
225	2	8000	5300
	4, 6, 8	9800	5300
250	2	9500	6500
	4, 6, 8	12500	7700
280	2	13500	7300
	4, 6, 8	20000	10500
315	2	18400	7600
	4, 6, 8	25500	10000

Motors 1LE55 at 50 Hz
with reinforced cylindrical roller bearings DE
Valid are: x_0 values for x = 0 and x_{max} values for x = l (l = shaft extension)

For motors		Admissible cantilever force	
		at x_0	at x_{max}
Frame size	No. of poles	N	N
1LE55			
225	2 (2BA2)	8100	6900
	2 (2BA6)	8000	6800
	4 (2BB0)	10000	7450
	4 (2BB2)	9900	7350
	4 (2BB6)	9800	7250
	6 82BC2)	11200	7400
	6 (2BC6)	11100	7300
	8 (2BD0)	11400	7400
	8 (2BD2)	11250	7350
	8 (2BD6)	11300	7300

Motors 1LE55 at 50 Hz
with reinforced cylindrical roller bearings DE
Valid are: x_0 values for x = 0 and x_{max} values for x = l (l = shaft extension)

For motors		Admissible cantilever force	
		at x_0	at x_{max}
Frame size	No. of poles	N	N
1LE55 (continued)			
250	2	9550	7450
	4	12200	9300
	6	13500	9300
	8	14750	9300
280	2	21000	8100
	4	27000	10500
	6	31500	10300
	8	33000	10100
315	2	18400	7600
	4	31000	10500
	6	34000	10500
	8	35000	10500
355	2	–	–
	4	–	–
	6	–	–
	8	–	–
400	2	2910	2570
	4	6830	5870
	6	6520	5610
	8	7860	6760
450	2	3820	3410
	4	7130	5220
	6	6970	6080
	8	8110	7070

Motors 1LE16 at 50 Hz
with reinforced cylindrical roller bearings DE
Valid are: x_0 values for x = 0 and x_{max} values for x = l (l = shaft extension)

For motors		Admissible cantilever force	
		at x_0	at x_{max}
Frame size	No. of poles	N	N
1LE16			
225	2	10700	5300
	4, 6, 8	12700	5300
250	2	15000	6500
	4, 6, 8	19000	7700
280	2	13500	7300
	4, 6, 8	20000	10500
315	2	18400	7600
	4, 6, 8	25500	10000

Motors 1LE56 at 50 Hz
with reinforced cylindrical roller bearings DE
Valid are: x_0 values for x = 0 and x_{max} values for x = l (l = shaft extension)

For motors		Admissible cantilever force	
		at x_0	at x_{max}
Frame size	No. of poles	N	N
1LE56			
315	2	21300	7600
	4	34000	15000
	6	38500	15000
	8	42000	15000
355	2	23700	11300
	4	39700	16000
	6	44600	16000
	8	44600	16000

© Innomotics 2024

Overview

1LE15/6 and 1MB15/6 [1] motors for 50 Hz with cylindrical roller bearings DE for frame sizes 280 to 315 in 4 to 8-pole version

1

Frame size 280, 4 to 8-pole

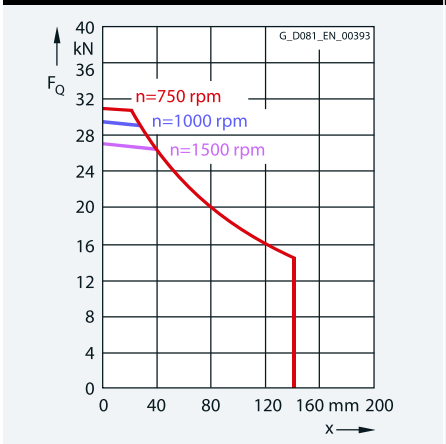

Frame size 315 S/M, 4 to 8-pole

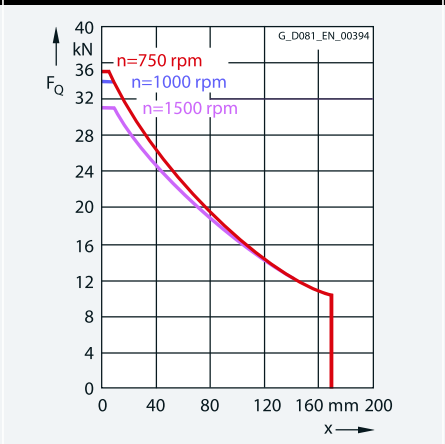

Frame size 315 L, 4 to 8-pole

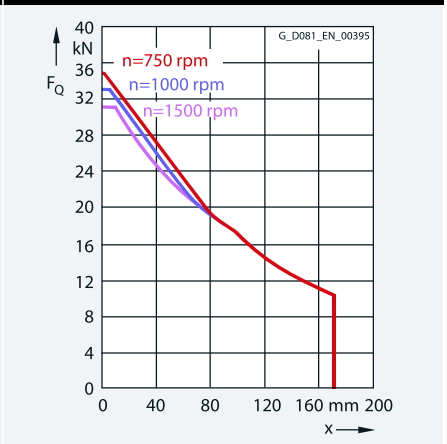

1LE5, 1MB5 motors for 50 Hz with cylindrical roller bearings DE for frame sizes 250 to 355 in 2 to 8-pole version

1LE5 motors of frame size 250, 2 to 8-pole

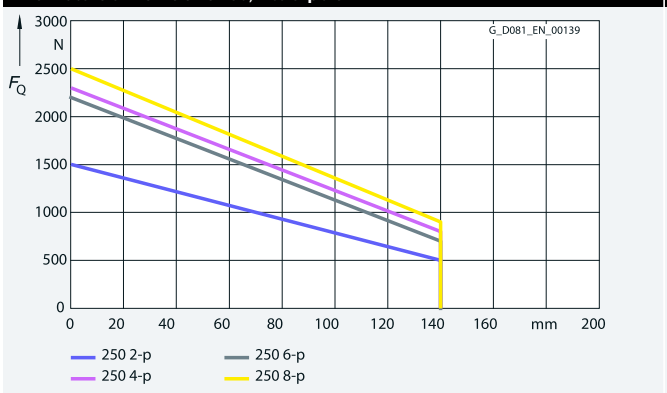

1LE5 motors of frame size 280, 2 to 8-pole

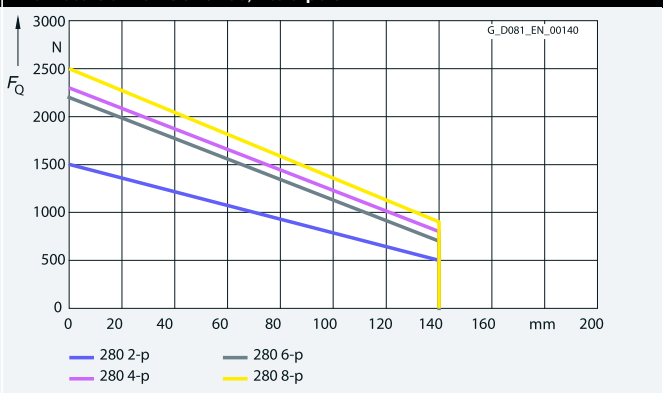

1LE5 motors of frame size 315, 2 to 8-pole

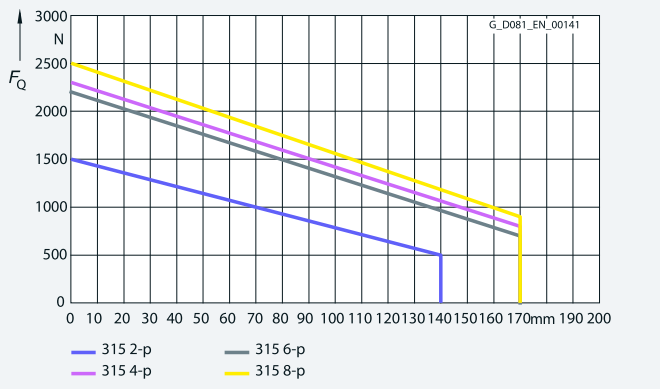

1LE5 motors of frame size 355, 2 to 8-pole

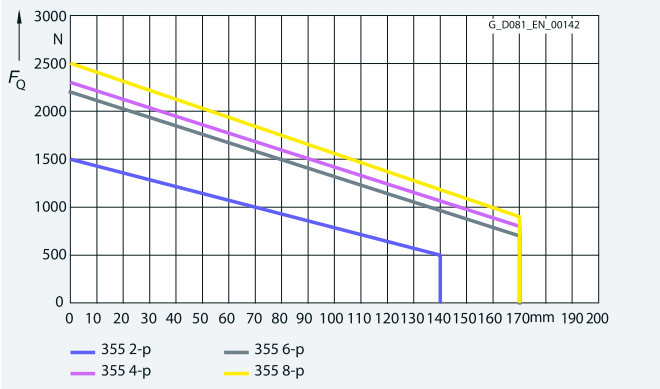

[1] Not valid for 1MB155 motors with type of protection Ex db eb.

© Innomotics 2024

Overview

Admissible cantilever forces at 50 Hz – basic version

For motors in a horizontal type of construction, the maximum cantilever forces are specified as a function of the axial forces. See diagrams below.

1LE5, 1MB5 motors with frame size 400 – type of construction IM B3

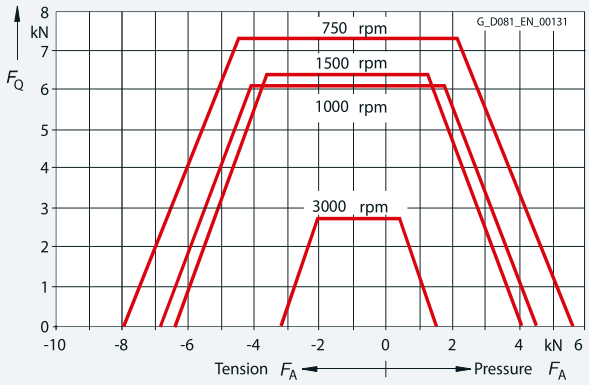

Cantilever force F_Q at x = l (shaft extension) via axial force F_A at nominal bearing service life L_{h10} = 20000 h

1LE5, 1MB5 motors with frame size 450 – type of construction IM B3

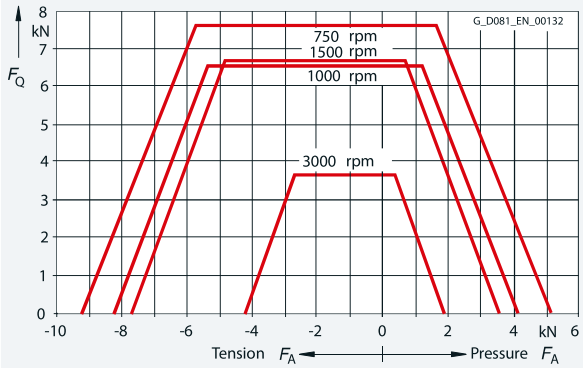

Cantilever force F_Q at x = l (shaft extension) via axial force F_A at nominal bearing service life L_{h10} = 20000 h

© Innomotics 2024

Overview

Admissible cantilever forces – bearings reinforced at both ends – order code **L25**

1LE10, 1MB10 motors (frame sizes 80 ... 160) and 1PC10 (frame sizes 100 ... 160) for 50 Hz with deep-groove bearings reinforced at both ends
Valid are: x_0 values for x = 0 and x_{max} values for x = l (l = shaft extension)

For motors		Admissible cantilever force	
		at x_0	at x_{max}
Frame size	No. of poles	N	N
1LE1501/03/21/23, 1MB15 – Basic Line 1LE10, 1MB10, 1PC10			
71	2	610	510
	4	760	640
	6	880	740
	8	970	820
80	2	950	800
	4	1190	1000
	6	1370	1150
	8	1520	1270
90	2	1200	1000
	4	1530	1270
	6	1760	1450
	8	1950	1610
100	2	1585	1270
	4	1960	1575
	6	2270	1815
	8	2520	2015
112	2	1545	1240
	4	1960	1555
	6	2270	1800
	8	2510	1990
132	2	2285	1795
	4	2860	2250
	6	3320	2580
	8	3700	2870
160	2	2800	2170
	4	3450	2750
	6	4000	3160
	8	4510	3500
180	2	3250	2610
	4	4110	3270
	6	4720	3740
	8	5130	4050
200	2	4320	3550
	4	5480	4500
	6	6220	5110
	8	6870	5640
225	2	5000	4150
	4	6250	4900
	6	7200	5750
	8	7800	6200
250	2	6000	4800
	4	7600	6200
	6	8750	7350
	8	9500	8000
280 [1]	2, 4, 6, 8	–	–
315 [1]	2, 4, 6, 8	–	–

Note:

1PC10 only for frame sizes 100 to 160,
1MB10 only for frame sizes 80 to 160.

Admissible cantilever forces – bearings reinforced at both ends, DE bearings for increased cantilever forces – order code **L28**

1LE15 and 1MB15 motors for 50 Hz with cylindrical roller bearings DE and with deep-groove bearings NDE
Valid are: x_0 values for x = 0 and x_{max} values for x = l (l = shaft extension)

For motors		Admissible cantilever force	
		at x_0	at x_{max}
Frame size	No. of poles	N	N
1LE1501/03/21/23, 1MB15 – Basic Line			
100, 112, 132, 160	2, 4, 6, 8	–	–
180	2	8150	4050
	4	9800	4050
	6	9800	4050
200	2	11200	6000
	4, 6	13600	6000
225	2	12700	7900
	4	15700	7250
	6, 8	15700	7300
250	2	17000	7750
	4	21000	9400
	6, 8	21000	9700
280, 315 S, M, L[1]	2, 4, 6, 8	–	–

Admissible cantilever forces – bearings for increased cantilever forces – order code **L22**

1MB1 and 1MB5 motors at 50 Hz with cylindrical roller bearings DE types of protection Ex db and Ex db eb
Valid are: x_0 values for x = 0; $x_{0.5}$ values for x = 0.5 x l and x_{max} values for x = l (l = shaft extension)

For motors		Admissible cantilever force		
		at x_0	at $x_{0.5}$	at x_{max}
Frame size	No. of poles	N	N	N
1MB1/1MB5				
160	2	5380	2870	1950
	4	5340	2850	1940
	6	6150	3290	2230
	8	4820	2570	1750
180	2	8150	4370	2980
	4	8100	4340	2960
	6	7930	4440	3030
	8	9950	5570	3810
200	2	11030	6140	4240
	4	11410	6350	4390
	6	11010	6130	4230
	8	13450	7490	5180
225	2	14990	8530	5940
	4	14640	6730	4980
	6	16110	8200	5480
	8	14010	7130	4770
250	2	18190	9950	6830
	4	19210	10510	7220
	6	18710	10240	7030
	8	17340	9490	6510
280	2	16480	9640	6710
	4	18070	10480	7270
	6	16800	9740	6750
	8	16140	9350	6490
315 S/M	2	21250	12930	9270
	4	12970	6870	4980
	6	12100	6450	4810
	8	10590	5970	4170
315 L	2	15960	9820	7130
	4	10300	5560	4030
	6	10740	5800	4210
	8	9920	5350	3880
355	2	18700	11400	8200
	4, 6, 8	Values on request		

[1] For values for frame sizes 280 to 315, see page 1/77. For frame sizes 280 to 315, bearings of size 63 are standard.

© Innomotics 2024

Overview

Admissible axial load

1LE10, 1MB10[1], and 1PC10[1] motors in vertical type of construction – basic version (with the exception of motors with increased power)

Frame size	3000 rpm				1500 rpm				1000 rpm				750 rpm			
	Shaft extension pointing															
	down		**up**		**down**		**up**		**down**		**up**		**down**		**up**	
	Load															
	down	up	down	up	down	up	down	up	down	up	down	up	down	up	down	up
	N	N	N	N	N	N	N	N	N	N	N	N	N	N	N	N
63	80	245	230	95	80	330	310	95	80	410	390	95	–	–	–	–
71	105	365	335	130	90	380	440	130	90	590	550	130	90	700	660	130
80	110	425	360	160	100	540	480	165	100	650	590	165	100	760	700	165
90	110	440	360	180	100	680	580	190	100	920	820	190	100	1150	1050	190
100	140	700	550	280	130	990	820	285	130	1280	1110	285	130	1560	1390	285
112	140	710	550	300	130	1000	820	310	130	1290	1110	310	130	1570	1390	310
132	200	1200	950	470	180	1680	1200	470	180	1900	1600	470	190	2200	1900	440
160	1500	1400	950	1900	1900	1800	1300	2200	2200	2200	1600	2700	2700	2700	1950	2900
180	1260	1230	500	1990	1600	1770	840	2530	1920	2150	1160	2900	2050	2500	1290	3260
200	1810	1720	660	2870	2410	2480	1260	3630	2700	3050	1550	4200	3060	3510	1910	4660

The values shown do not assume a cantilever force on the shaft extension.
The admissible loads are valid for operation at 50 Hz; for 60 Hz, please inquire.

The calculation of the admissible axial load was based on the drive with generally available coupling.
For suppliers, see section "Accessories" on page 3/146 in the respective section of the catalog.
Please inquire if the load direction alternates.

1LE10, 1MB10[1], and 1PC10[1] motors in horizontal type of construction – basic version (with the exception of motors with increased power)

Frame size	3000 rpm				1500 rpm				1000 rpm				750 rpm			
	Tensile load	Thrust load (N)			Tensile load	Thrust load (N)			Tensile load	Thrust load (N)			Tensile load	Thrust load (N)		
		with radial load at		without radial load		with radial load at		without radial load		with radial load at		without radial load		with radial load at		without radial load
		x_0	$x_{max.}$			x_0	$x_{max.}$			x_0	$x_{max.}$			x_0	$x_{max.}$	
	N	N	N	N	N	N	N	N	N	N	N	N	N	N	N	N
63	90	120	90	240	90	140	110	320	90	170	120	400	–	–	–	–
71	120	150	120	350	120	210	150	460	120	260	180	570	120	300	210	680
80	140	190	150	400	140	300	260	510	140	330	280	620	140	340	290	730
90	150	300	280	400	150	400	360	630	150	480	430	870	150	550	500	1100
100	220	450	350	630	220	600	500	910	220	650	550	1200	220	750	650	1480
112	220	450	350	630	220	600	500	910	220	650	550	1200	220	750	650	1480
132	350	650	520	1200	350	850	700	1600	350	1020	890	1900	350	1150	1020	2200
160	1500	850	720	1500	1500	1050	920	1800	1500	1250	1120	2200	1500	1350	1220	2600
180	1630	–	–	870	2070	–	–	1310	2420	–	–	1660	2660	–	–	1900
200	2340	–	–	1190	3020	–	–	1870	3450	–	–	2300	3860	–	–	2710

The values shown do not assume a cantilever force on the shaft extension.
The admissible loads are valid for operation at 50 Hz; for 60 Hz, please inquire.

The calculation of the admissible axial load was based on the drive with generally available coupling.
For suppliers, see the section "Accessories" on page 3/146.
Please inquire if the load direction alternates.

1MB5 motors for Ex db, Ex db eb with a vertical type of construction – basic version

Frame size	3000 rpm		1500 rpm		1000 rpm		750 rpm	
	Shaft extension pointing down		**Shaft extension pointing down**		**Shaft extension pointing down**		**Shaft extension pointing down**	
	Load							
	down	up	down	up	down	up	down	up
	N	N	N	N	N	N	N	N
160	1790	2390	2460	3170	2730	3730	3420	4260
180	2020	2780	2760	3760	3350	4410	3770	5050
200	2910	4150	4070	5370	4840	6360	5460	7200
225	2570	4230	3590	5740	4250	6690	6110	8190
250	3470	5530	4770	7410	5880	8700	7260	9760
280	2440	5520	4300	8570	5860	9680	6920	10740
315 S/M	1190	6350	4250	10130	5240	11980	6340	13080
315 L	970	7250	3150	11170	3730	13070	4570	14130
355	270	10510	Values on request		Values on request		Values on request	

[1] 1MB10 motors only available with frame sizes 80 to 160 and 1PC10 motors only available with frame sizes 100 to 160.

© Innomotics 2024

Overview

1LE15, 1MB15, 1LE16, 1MB16, 1LE55, and 1LE56 motors in vertical type of construction – basic version

Frame size	Type	2-pole – 3000 rpm				4-pole – 1500 rpm				6-pole – 1000 rpm				8-pole – 750 rpm			
		Shaft extension pointing															
		down		**up**		**down**		**up**		**down**		**up**		**down**		**up**	
		Load															
		down	up	down	up	down	up	down	up	down	up	down	up	down	up	down	up
		N	N	N	N	N	N	N	N	N	N	N	N	N	N	N	N
1LE15, 1MB15 – Basic Line																	
71	**1..1501-0C.2**	220	100	80	240	210	220	180	240	210	300	260	250	–	–	–	–
	1..1501-0C.3	220	90	70	240	210	210	170	250	210	300	260	250	–	–	–	–
	1..1503-0C.2	220	90	70	240	210	210	170	250	210	300	260	250	–	–	–	–
	1..1503-0C.3	210	100	60	250	200	200	150	260	200	290	230	260	–	–	–	–
80	**1..1501-0D.2**	240	280	240	280	230	460	400	290	230	600	540	290	–	–	–	–
	1..1501-0D.3	230	270	220	280	230	450	390	290	220	590	510	300	–	–	–	–
	1..1503-0D.2	230	270	220	280	230	450	390	290	220	590	510	300	–	–	–	–
	1..1503-0D.3	230	270	210	290	220	440	360	300	210	590	490	300	–	–	–	–
90	**1..1501-0E.0**	210	300	230	280	210	480	400	290	210	620	540	290	–	–	–	–
	1..1501-0E.4	210	300	220	290	200	480	380	300	200	620	520	300	–	–	–	–
	1..1503-0E.0	210	300	220	290	200	480	380	300	200	620	520	300	–	–	–	–
	1..1503-0E.4	210	290	210	290	200	460	360	300	200	610	510	300	–	–	–	–
100	**1..15.1-1A.4**	300	450	340	410	280	720	570	430	260	930	740	450	280	1100	940	440
	1..15.1-1A.5	–	–	–	–	270	710	540	440	–	–	–	–	260	1100	910	450
	1..15.1-1A.6	290	440	310	420	250	710	500	460	240	920	690	470	–	–	–	–
	1..15.3-1A.4	290	440	310	420	250	710	500	460	–	–	–	–	–	–	–	–
	1..15.3-1AB5	–	–	–	–	250	710	500	460	–	–	–	–	–	–	–	–
112	**1..15.1-1B.2**	280	460	310	430	260	730	540	450	250	940	730	460	250	1110	900	460
	1..15.1-1B.6	260	460	270	450	250	730	510	470	240	930	700	470	–	–	–	–
	1..15.3-1B.2	260	460	270	450	250	730	510	470	240	930	700	470	–	–	–	–
132	**1..15.1-1C.0**	510	600	370	740	490	1000	730	760	490	1310	1040	760	480	1570	1280	770
	1..15.1-1C.1	490	610	340	760	–	–	–	–	–	–	–	–	–	–	–	–
	1..15.1-1C.2	–	–	–	–	460	1000	670	790	470	1310	1000	780	450	1580	1220	810
	1..15.1-1C.3	–	–	–	–	–	–	–	–	440	1310	940	810	–	–	–	–
	1..15.1-1C.6	450	610	260	800	410	1010	580	840	390	1320	850	860	–	–	–	–
	1..15.3-1C.0	490	610	340	760	410	1010	580	840	440	1310	940	810	–	–	–	–
	1..15.3-1C.1	450	610	260	800	–	–	–	–	–	–	–	–	–	–	–	–
	1..15.3-1C.2	–	–	–	–	410	1010	580	840	440	1310	940	810	–	–	–	–
	1..15.3-1C.3	–	–	–	–	–	–	–	–	400	1320	850	860	–	–	–	–
160	**1..15.1-1D.2**	1560	890	500	1950	1930	1340	870	2400	2190	1700	1130	2760	2540	1990	1480	3050
	1..15.1-1D.3	1510	900	450	1960	–	–	–	–	–	–	–	–	2430	1980	1370	3040
	1..15.1-1D.4	1470	900	410	1960	1840	1350	780	2410	2070	1710	1010	2770	2350	2000	1290	3060
	1..15.1-1D.6	1370	900	310	1960	1760	1380	700	2440	1930	1720	870	2780	–	–	–	–
	1..15.1-1D.7	–	–	–	–	1640	1400	580	2460	–	–	–	–	–	–	–	–
	1..15.3-1D.2	1510	900	450	1960	1840	1350	780	2410	2070	1710	1010	2770	–	–	–	–
	1..15.3-1D.3	1470	900	410	1960	–	–	–	–	–	–	–	–	–	–	–	–
	1..15.3-1D.4	1370	900	310	1960	1760	1380	700	2440	1930	1720	870	2780	–	–	–	–
180	**1..15..-1E.2**	1290	1220	530	1980	1680	1750	920	2500	–	–	–	–	–	–	–	–
	1..15..-1E.4	–	–	–	–	1610	1760	850	2520	1920	2120	1160	2880	2270	2440	1510	3200
	1..15..-1E.6	1260	1230	500	1990	1600	1770	840	2530	1920	2150	1160	2900	2050	2500	1290	3260
200	**1..15..-2A.4**	1920	1680	760	2830	–	–	–	–	2880	2970	1720	4120	–	–	–	–
	1..15..-2A.5	1810	1700	660	2860	2410	2450	1260	3600	2770	3010	1620	4160	3240	3450	2090	4600
	1..15..-2A.6	1810	1720	660	2870	2410	2480	1260	3630	2700	3050	1550	4200	3060	3510	1910	4660
225	**1..15..-2B.0**	–	–	–	–	2200	2800	1180	3830	–	–	–	–	3200	3750	2180	4770
	1..15..-2B.2	1720	2000	630	3020	2100	2850	1070	3900	2340	3470	1300	4480	3090	3800	2070	4820
	1..15..-2B.6	1720	2000	630	3020	2100	2850	1070	3900	2300	3500	1280	4480	2780	3950	1770	4970
250	**1..15..-2C.2**	1630	2600	830	3400	1980	3580	1180	4390	2440	4210	1650	5020	3180	4760	2380	5560
	1..15..-2C.6	1630	2650	830	3450	1940	3740	1140	4530	2440	4320	1640	5120	2950	4850	2150	5650
280	**1..15..-2D.0**	3540	4280	1950	5850	5320	6930	3640	8500	6630	7990	5000	9570	7930	9030	6200	10500
	1..15..-2D.2	3250	4390	1650	5950	4790	6990	3170	8580	6350	8150	4700	9700	7690	9180	6000	10600
	1..15..-2D.6	3180	4540	1580	6100	4770	7170	3150	8750	6230	8400	4600	9900	7370	9300	5700	10700
315	**1..15..-3A.0**	3580	4710	1450	6850	5640	7790	3600	9850	6800	9100	4700	11100	8500	10150	6450	11800
	1..15..-3A.2	3180	4960	1050	7100	4780	7920	2700	9900	6080	9300	4000	11300	8150	10400	6100	11900
	1..15..-3A.4	2890	5080	770	7200	4820	7580	2750	9600	5400	9750	3350	11700	7250	10650	5200	12000
	1..15..-3A.5	2240	5480	100	7600	3720	7620	1650	9650	4800	10150	2750	11800	6500	10900	4450	12300
	1..15..-3A.6	–	–	–	–	–	–	–	–	4550	10000	2500	11800	5900	11000	3900	12500

© Innomotics 2024

Overview

Frame size	Type	2-pole – 3000 rpm				4-pole – 1500 rpm				6-pole – 1000 rpm				8-pole – 750 rpm			
		Shaft extension pointing															
		down		**up**		**down**		**up**		**down**		**up**		**down**		**up**	
		Load															
		down	up	down	up	down	up	down	up	down	up	down	up	down	up	down	up
		N	N	N	N	N	N	N	N	N	N	N	N	N	N	N	N
1LE55 – Basic Line																	
225	**1LE55..-2B.0**	–	–	–	–	2200	2800	1180	3830	–	–	–	–	3200	3750	2180	4770
	1LE55..-2B.2	1720	2000	630	3020	1930	2850	1060	3900	2340	3470	1300	4480	3090	3800	2070	4820
	1LE55..-2B.6	1640	2000	630	3020	1740	2850	920	3900	2200	3500	1280	4480	2780	3950	1770	4970
250	**1LE55..-2C.2**	1630	2600	760	4040	1980	3580	1080	5150	2440	4210	1600	5100	3180	4760	2380	5560
	1LE55..-2C.6	1630	2650	700	4100	1550	4550	600	5500	2300	4500	1340	5450	2950	4850	2150	5650
280	**1LE55..-2D.0**	4500	4100	6600	2000	6930	5320	9700	3130	7800	6630	10900	4450	9000	7930	11500	5800
	1LE55..-2D.2	4600	4000	6700	1900	6990	4790	9800	2800	4600	4000	11000	4200	9180	7690	11700	5500
315	**1LE55..-3A.0**	3800	4700	1700	6100	5500	7700	3200	8800	6500	9500	4300	9600	7800	10800	5500	10000
	1LE55..-3A.2	3600	5800	1500	6300	5000	8400	2700	9500	6200	9800	4000	10100	7500	11100	5200	10900
	1LE55..-3A.4	2900	6400	800	7000	4800	8700	2400	9600	5700	10400	3500	10700	7200	11400	4900	11200
	1LE55..-3A.5	2800	6800	700	7100	4400	9100	2000	1000	5300	10800	3100	11000	6700	11800	4400	11700
	1LE55..-3A.6	12500	1800	10100	622	19000	2293	16700	4633	5100	11100	11300	2800	6400	12100	12000	4100
	1LE55..-3A.7	12000	2300	9600	622	19000	2353	16600	4693	22000	3014	19600	5534	24700	3393	22300	5733
	1LE55..-3A.8	–	–	–	–	–	–	–	–	21000	4054	18600	6394	23700	4423	21300	6763
1LE16, 1MB16 – Performance Line																	
100	**1..16.1-1A.4**	220	930	820	330	200	1330	1180	350	180	1640	1450	370	200	1900	1740	360
	1..16.1-1A.5	–	–	–	–	190	1320	1150	360	–	–	–	–	–	–	–	–
	1..16.1-1A.6	210	930	800	340	170	1320	1110	380	160	1640	1410	390	180	1900	1710	370
	1..16.3-1A.4	210	930	800	340	170	1320	1110	380	–	–	–	–	–	–	–	–
	1..16.3-1A.5	–	–	–	–	170	1320	1110	380	–	–	–	–	–	–	–	–
112	**1..16.1-1B.2**	200	940	790	350	180	1340	1150	370	170	1650	1440	380	–	–	–	–
	1..16.1-1B.6	180	940	750	370	170	1340	1120	390	160	1640	1410	390	170	1910	1700	380
	1..16.3-1B.2	180	940	750	370	170	1340	1120	390	160	1640	1410	390	–	–	–	–
132	**1..16.1-1C.0**	540	1120	890	770	520	1700	1430	790	520	2150	1880	790	510	2530	2240	800
	1..16.1-1C.1	520	1130	860	790	–	–	–	–	–	–	–	–	–	–	–	–
	1..16.1-1C.2	–	–	–	–	490	1710	1380	820	500	2150	1840	810	480	2540	2180	840
	1..16.1-1C.3	–	–	–	–	–	–	–	–	470	2150	1780	840	–	–	–	–
	1..16.1-1C.6	480	1130	780	830	440	1710	1280	870	420	2160	1690	890	–	–	–	–
	1..16.3-1C.0	520	1130	860	790	440	1710	1280	870	470	2150	1780	840	–	–	–	–
	1..16.3-1C.1	480	1130	780	830	–	–	–	–	–	–	–	–	–	–	–	–
	1..16.3-1C.2	–	–	–	–	440	1710	1280	870	470	2150	1780	840	–	–	–	–
	1..16.3-1C.3	–	–	–	–	–	–	–	–	420	2160	1690	890	–	–	–	–
160	**1..16.1-1D.2**	2200	1870	1480	2590	2860	2610	2140	3330	3320	3170	2600	3890	3830	3620	3110	4340
	1..16.1-1D.3	2150	1880	1430	2600	–	–	–	–	–	–	–	–	3730	3620	3010	4340
	1..16.1-1D.4	2120	1890	1400	2610	2760	2610	2040	3330	3200	3180	2480	3900	3650	3640	2930	4360
	1..16.1-1D.6	2020	1890	1300	2610	2680	2640	1960	3360	3050	3180	2330	3900	–	–	–	–
	1..16.1-1D.7	–	–	–	–	2570	2670	1850	3390	–	–	–	–	–	–	–	–
	1..16.3-1D.2	2150	1880	1430	2600	2760	2610	2040	3330	3200	3180	2480	3900	–	–	–	–
	1..16.3-1D.3	2120	1890	1400	2610	–	–	–	–	–	–	–	–	–	–	–	–
	1..16.3-1D.4	2020	1890	1300	2610	2680	2640	1960	3360	3050	3180	2330	3900	–	–	–	–
180	**1..16..-1E.2**	2510	2050	1360	3200	3240	2920	2090	4070	–	–	–	–	–	–	–	–
	1..16..-1E.4	–	–	–	–	3180	2930	2020	4090	3740	3560	2580	4710	4300	4090	3150	5240
	1..16..-1E.6	2490	2060	1330	3220	3160	2950	2010	4100	3740	3570	2580	4730	4090	4140	2940	5290
200	**1..16..-2A.4**	2920	3030	2110	3840	–	–	–	–	4570	5010	3760	5820	–	–	–	–
	1..16..-2A.5	2810	3060	2000	3870	3820	4210	3010	5020	4470	5060	3660	5870	5200	5750	4390	6560
	1..16..-2A.6	2810	3060	2000	3870	3820	4230	3010	5040	4400	5090	3590	5900	5010	5800	4200	6610
225	**1..16..-2B.0**	–	–	–	–	4200	4750	3150	5800	–	–	–	–	5900	6400	4850	7650
	1..16..-2B.2	3100	3400	2050	4450	4100	4850	3000	5850	4700	5800	3650	6850	5800	6450	4700	7500
	1..16..-2B.6	3100	3400	2050	4450	4100	4850	3000	5850	4650	5850	3600	6900	5500	6600	4400	7650
250	**1..16..-2C.2**	3850	4100	2250	5600	4850	5650	3250	7250	5750	6750	4200	8350	6900	7700	5300	9200
	1..16..-2C.6	3850	4100	2250	5600	4800	5750	3200	7400	5750	6750	4200	8450	6700	7800	5000	9300
280	**1..16..-2D.0**	3540	4280	1950	5850	5320	6930	3640	8500	6630	7990	5000	9570	7930	9030	6200	10500
	1..16..-2D.2	3250	4390	1650	5950	4790	6990	3170	8580	6350	8150	4700	9700	7690	9180	6000	10600
	1..16..-2D.6	3180	4540	1580	6100	4770	7170	3150	8750	6230	8400	4600	9900	7370	9300	5700	10700
315	**1..16..-3A.0**	3580	4710	1450	6850	5640	7790	3600	9850	6800	9100	4700	11100	8500	10150	6450	11800
	1..16..-3A.2	3180	4960	1050	7100	4780	7920	2700	9900	6080	9300	4000	11300	8150	10400	6100	11900
	1..16..-3A.4	2890	5080	770	7200	4820	7580	2750	9600	5400	9750	3350	11700	7250	10650	5200	12000
	1..16..-3A.5	2240	5480	100	7600	3720	7620	1650	9650	4800	10150	2750	11800	6500	10900	4450	12300
	1..16..-3A.6	–	–	–	–	–	–	–	–	4550	10000	2500	11800	5900	11000	3900	12500

© Innomotics 2024

Overview

Frame size	Type	2-pole – 3000 rpm				4-pole – 1500 rpm				6-pole – 1000 rpm				8-pole – 750 rpm			
		Shaft extension pointing															
		down		**up**		**down**		**up**		**down**		**up**		**down**		**up**	
		Load															
		down	up	down	up	down	up	down	up	down	up	down	up	down	up	down	up
		N	N	N	N	N	N	N	N	N	N	N	N	N	N	N	N
1LE56 – Performance Line																	
315	**1LE56..-3A.6**	10500	1800	10500	1800	17500	2500	17500	2500	–	–	–	–	–	–	–	–
	1LE56..-3A.7	10000	2300	10000	2300	17000	3000	17000	3000	2000	3000	20000	3000	22500	3400	22500	3400
	1LE56..-3A.8	–	–	–	–	–	–	–	–	19000	4000	19000	4000	21500	4400	21500	4400
355	**1LE56..-3B.3**	9700	2900	9700	2900	20000	3600	20000	3600	–	–	–	–	–	–	–	–
	1LE56..-3B.4	9300	3500	9300	3500	19500	3800	19500	3800	–	–	–	–	–	–	–	–
	1LE56..-3B.5	9000	3700	9000	3700	18500	4600	18500	4600	–	–	–	–	–	–	–	–
	1LE56..-3BC2	–	–	–	–	–	–	–	–	21500	5000	21500	5000	–	–	–	–
	1LE56..-3BC3	–	–	–	–	–	–	–	–	21000	5500	21000	5500	–	–	–	–
	1LE56..-3BC4	–	–	–	–	–	–	–	–	21000	5500	21000	5500	–	–	–	–
	1LE56..-3BD1	–	–	–	–	–	–	–	–	–	–	–	–	23000	5500	23000	5500
	1LE56..-3BD2	–	–	–	–	–	–	–	–	–	–	–	–	22000	5800	22000	5800

1MB15 and 1MB55 motors for Ex db, Ex db eb with a vertical type of construction – basic version

Frame size	2-pole – 3000 rpm				4-pole – 1500 rpm				6-pole – 1000 rpm				8-pole – 750 rpm			
	Shaft extension pointing															
	up		**down**		**up**		**down**		**up**		**down**		**up**		**down**	
	Load															
	down	up	down	up	down	up	down	up	down	up	down	up	down	up	down	up
	N	N	N	N	N	N	N	N	N	N	N	N	N	N	N	N
71	510	220	190	550	600	340	280	660	700	440	380	760	780	510	450	840
80	830	350	290	890	1000	540	460	1080	1130	690	590	1230	1220	780	680	1320
90	860	380	270	980	1050	590	450	1180	1210	760	610	1350	1310	860	720	1450
100	1660	1000	770	1890	2010	1380	1120	2270	2400	1740	1510	2630	2700	2020	1810	2910
112	1680	980	790	1860	2070	1430	1180	2320	2380	1760	1490	2640	2620	2030	1730	2920
132	2410	1480	1140	2750	2930	2100	1660	3370	3370	2580	2100	3850	3740	2970	2470	4240
160	2810	2310	1710	3420	3560	3170	2460	4270	3930	3820	2820	4920	4590	4320	3480	5430
180	2980	2620	1860	3740	3700	3580	2580	4700	4370	4310	3250	5430	4850	5010	3730	6130
200	3850	3380	2140	5080	4940	4540	3240	6250	5650	5460	3940	7160	6260	6300	4560	8010
225	4240	3950	2290	5900	5230	5430	3280	7380	5970	6460	4020	8400	7150	7280	5200	9230
250	5140	4820	2760	7200	6350	6610	3970	8990	7400	7840	5020	10220	8710	8830	6330	11210
280	4510	5210	2130	7590	6510	7980	3710	10780	8190	9210	5390	12010	8160	9180	5360	11980
315 S/M	4700	7260	2100	9860	7650	10350	4470	13530	8290	11850	5110	15030	9500	13060	6320	16240
315 L	4770	8450	2170	11050	6090	10930	2910	14110	6880	13040	3700	16220	7740	14120	4560	17300
355	5160	12600	2360	15400	6210	15170	2730	18650	O. R.	O. R.	O. R.	O. R.	O. R.	O. R.	O. R.	O. R.

© Innomotics 2024

Overview

1LE15, 1MB15 and 1LE5 motors in vertical type of construction – bearings reinforced at both ends – order code **L25**

Frame size	Type	2-pole – 3000 rpm				4-pole – 1500 rpm				6-pole – 1000 rpm				8-pole – 750 rpm			
		Shaft extension pointing															
		down		**up**		**down**		**up**		**down**		**up**		**down**		**up**	
		Load															
		down	up	down	up	down	up	down	up	down	up	down	up	down	up	down	up
		N	N	N	N	N	N	N	N	N	N	N	N	N	N	N	N
1LE15, 1MB15 – Basic Line																	
71/80/90		Available soon															
100	**1..15.1-1A.4**	220	930	820	330	200	1330	1180	350	180	1640	1450	370	200	1900	1740	360
	1..15.1-1A.5	–	–	–	–	190	1320	1150	360	–	–	–	–	180	1900	1710	370
	1..15.1-1A.6	210	930	800	340	170	1320	1110	380	160	1640	1410	390	–	–	–	–
	1..15.3-1A.4	210	930	800	340	170	1320	1110	380	–	–	–	–	–	–	–	–
	1..15.3-1A.5	–	–	–	–	170	1320	1110	380	–	–	–	–	–	–	–	–
112	**1..15.1-1B.2**	200	940	790	350	180	1340	1150	370	170	1650	1440	380	170	1910	1700	380
	1..15.1-1B.6	180	940	750	370	170	1340	1120	390	160	1640	1410	390	–	–	–	–
	1..15.3-1B.2	180	940	750	370	170	1340	1120	390	160	1640	1410	390	–	–	–	–
132	**1..15.1-1C.0**	540	1120	890	770	520	1700	1430	790	520	2150	1880	790	510	2530	2240	800
	1..15.1-1C.1	520	1130	860	790	–	–	–	–	–	–	–	–	–	–	–	–
	1..15.1-1C.2	–	–	–	–	490	1710	1380	820	500	2150	1840	810	480	2540	2180	840
	1..15.1-1C.3	–	–	–	–	–	–	–	–	470	2150	1780	840	–	–	–	–
	1..15.1-1C.6	480	1130	780	830	440	1710	1280	870	420	2160	1690	890	–	–	–	–
	1..15.3-1C.0	520	1130	860	790	440	1710	1280	870	470	2150	1780	840	–	–	–	–
	1..15.3-1C.1	480	1130	780	830	–	–	–	–	–	–	–	–	–	–	–	–
	1..15.3-1C.2	–	–	–	–	440	1710	1280	870	470	2150	1780	840	–	–	–	–
	1..15.3-1C.3	–	–	–	–	–	–	–	–	420	2160	1690	890	–	–	–	–
160	**1..15.1-1D.2**	2200	1870	1480	2590	2860	2610	2140	3330	3320	3170	2600	3890	3830	3620	3110	4340
	1..15.1-1D.3	2150	1880	1430	2600	–	–	–	–	–	–	–	–	3730	3620	3010	4340
	1..15.1-1D.4	2120	1890	1400	2610	2760	2610	2040	3330	3200	3180	2480	3900	3650	3640	2930	4360
	1..15.1-1D.6	2020	1890	1300	2610	2680	2640	1960	3360	3050	3180	2330	3900	–	–	–	–
	1..15.1-1D.7	–	–	–	–	2570	2670	1850	3390	–	–	–	–	–	–	–	–
	1..15.3-1D.2	2150	1880	1430	2600	2760	2610	2040	3330	3200	3180	2480	3900	–	–	–	–
	1..15.3-1D.3	2120	1890	1400	2610	–	–	–	–	–	–	–	–	–	–	–	–
	1..15.3-1D.4	2020	1890	1300	2610	2680	2640	1960	3360	3050	3180	2330	3900	–	–	–	–
180	**1..15..-1E.2**	2510	2050	1360	3200	3240	2920	2090	4070	–	–	–	–	–	–	–	–
	1..15..-1E.4	–	–	–	–	3180	2930	2020	4090	3740	3560	2580	4710	4300	4090	3150	5240
	1..15..-1E.6	2490	2060	1330	3220	3160	2950	2010	4100	3740	3570	2580	4730	4090	4140	2940	5290
200	**1..15..-2A.4**	2920	3030	2110	3840	–	–	–	–	4570	5010	3760	5820	–	–	–	–
	1..15..-2A.5	2810	3060	2000	3870	3820	4210	3010	5020	4470	5060	3660	5870	5200	5750	4390	6560
	1..15..-2A.6	2810	3060	2000	3870	3820	4230	3010	5040	4400	5090	3590	5900	5010	5800	4200	6610
225	**1..15..-2B.0**	–	–	–	–	4200	4750	3150	5800	–	–	–	–	5900	6400	4850	7650
	1..15..-2B.2	3100	3400	2050	4450	4100	4850	3000	5850	4700	5800	3650	6850	5800	6450	4700	7500
	1..15..-2B.6	3100	3400	2050	4450	4100	4850	3000	5850	4650	5850	3600	6900	5500	6600	4400	7650
250	**1..15..-2C.2**	3850	4100	2250	5600	4850	5650	3250	7250	5750	6750	4200	8350	6900	7700	5300	9200
	1..15..-2C.6	3850	4100	2250	5600	4800	5750	3200	7400	5750	6750	4200	8450	6700	7800	5000	9300

For frame sizes > 250 standard version.

1LE5																	
Frame size	Type	2-pole – 3000 rpm				4-pole – 1500 rpm				6-pole – 1000 rpm				8-pole – 750 rpm			
		Shaft extension pointing															
		down		**up**		**down**		**up**		**down**		**up**		**down**		**up**	
		Load															
		down	up	down	up	down	up	down	up	down	up	down	up	down	up	down	up
		N	N	N	N	N	N	N	N	N	N	N	N	N	N	N	N
225	**1LE5...-2B.0**	–	–	–	–	4200	4750	1180	3830	–	–	–	–	5900	6400	2180	4770
	1LE5...-2B.2	3100	3400	630	3020	4100	4850	1060	3900	4700	5800	1300	4480	5800	6450	2070	4820
	1LE5...-2B.6	3100	3400	630	3020	3870	4850	920	3900	4650	5850	1280	4480	2780	3950	1770	4970
250	**1LE5...-2C.2**	3850	4100	2000	5600	4850	5650	2950	7250	5750	6750	4000	8350	6900	7700	5300	9200
	1LE5...-2C.6	3850	4100	1970	5600	4700	5750	2500	7400	5750	6750	3750	8450	6700	7800	5000	9300

© Innomotics 2024

Overview

1LE15, 1MB15, 1LE16, 1MB16, 1LE55, 1MB55, 1LE56, and 1MB56 motors in horizontal type of construction – basic version

Frame size	Type	2-pole – 3000 rpm Load		4-pole – 1500 rpm		6-pole – 1000 rpm		8-pole – 750 rpm		Type	2-pole – 3000 rpm Load		4-pole – 1500 rpm		6-pole – 1000 rpm		8-pole – 750 rpm	
		Tension	Thrust	Tension	Thrust	Tension	Thrust	Tension	Thrust		Tension	Thrust	Tension	Thrust	Tension	Thrust	Tension	Thrust
		N	N	N	N	N	N	N	N		N	N	N	N	N	N	N	N
1LE15, 1MB15 – Basic Line										**1LE16, 1MB16 – Performance Line**								
71	**1..1501-0C.2**	230	90	230	200	230	280	–	–	**–**	–	–	–	–	–	–	–	–
	1..1501-0C.3	230	80	230	190	230	280	–	–	**–**	–	–	–	–	–	–	–	–
	1..1503-0C.2	230	80	230	190	230	280	–	–	**–**	–	–	–	–	–	–	–	–
	1..1503-0C.3	230	80	230	180	230	260	–	–	**–**	–	–	–	–	–	–	–	–
80	**1..1501-0D.2**	260	260	260	430	260	570	–	–	**–**	–	–	–	–	–	–	–	–
	1..1501-0D.3	260	250	260	420	260	550	–	–	**–**	–	–	–	–	–	–	–	–
	1..1503-0D.2	260	250	260	420	260	550	–	–	**–**	–	–	–	–	–	–	–	–
	1..1503-0D.3	260	240	260	400	260	540	–	–	**–**	–	–	–	–	–	–	–	–
90	**1..1501-0E.0**	250	270	250	440	250	580	–	–	**–**	–	–	–	–	–	–	–	–
	1..1501-0E.4	250	260	250	430	250	570	–	–	**–**	–	–	–	–	–	–	–	–
	1..1503-0E.0	250	260	250	430	250	570	–	–	**–**	–	–	–	–	–	–	–	–
	1..1503-0E.4	250	250	250	410	250	560	–	–	**–**	–	–	–	–	–	–	–	–
100	**1..15.1-1A.4**	1120	400	1370	650	1560	840	1740	1020	**1..16.1-1A.4**	1440	880	1820	1260	2110	1550	2380	1820
	1..15.1-1A.5	–	–	1350	630	–	–	1730	1010	**1..16.1-1A.5**	–	–	1800	1240	–	–	2370	1810
	1..15.1-1A.6	1000	380	1330	610	1530	810	–	–	**1..16.1-1A.6**	1430	870	1780	1220	2090	1530	–	–
	1..15.3-1A.4	1000	380	1330	610	–	–	–	–	**1..16.3-1A.4**	1430	870	1780	1220	–	–	–	–
	1..15.3-1A.5	–	–	1330	610	–	–	–	–	**1..16.3-1A.5**	–	–	1780	1220	–	–	–	–
112	**1..15.1-1B.2**	1110	390	1360	640	1560	840	1730	1010	**1..16.1-1B.2**	1430	870	1810	1250	2110	1550	2370	1810
	1..15.1-1B.6	1090	370	1340	620	1540	820	–	–	**1..16.1-1B.6**	1410	850	1790	1230	2090	1530	–	–
	1..15.3-1B.2	1090	370	1340	620	1540	820	–	–	**1..16.3-1B.2**	1410	850	1790	1230	2090	1530	–	–
132	**1..15.1-1C.0**	1750	490	2130	870	2440	1180	2690	1430	**1..16.1-1C.0**	2330	1010	2890	1570	3340	2020	3710	2390
	1..15.1-1C.1	1740	480	–	–	–	–	–	–	**1..16.1-1C.1**	2320	1000	–	–	–	–	–	–
	1..15.1-1C.2	–	–	2100	840	2420	1160	2660	1400	**1..16.1-1C.2**	–	–	2870	1550	3320	2000	3680	2360
	1..15.1-1C.3	–	–	–	–	2390	1130	–	–	**1..16.1-1C.3**	–	–	–	–	3290	1970	–	–
	1..15.1-1C.6	1700	440	2060	800	2350	1090	–	–	**1..16.1-1C.6**	2280	960	2820	1500	3250	1930	–	–
	1..15.3-1C.0	1740	480	2060	800	2390	1130	–	–	**1..16.3-1C.0**	2320	1000	2820	1500	3290	1970	–	–
	1..15.3-1C.1	1700	440	–	–	–	–	–	–	**1..16.3-1C.1**	2280	960	–	–	–	–	–	–
	1..15.3-1C.2	–	–	2060	800	2390	1130	–	–	**1..16.3-1C.2**	–	–	2820	1500	3290	1970	–	–
	1..15.3-1C.3	–	–	–	–	2350	1090	–	–	**1..16.3-1C.3**	–	–	–	–	3250	1930	–	–
160	**1..15.1-1D.2**	1760	700	2170	1110	2480	1420	2800	1740	**1..16.1-1D.2**	2400	1680	3100	2380	3610	2890	4090	3370
	1..15.1-1D.3	1740	680	–	–	–	–	2740	1680	**1..16.1-1D.3**	2380	1660	–	–	–	–	4040	3320
	1..15.1-1D.4	1720	660	2130	1070	2420	1360	2710	1650	**1..16.1-1D.4**	2370	1650	3050	2330	3550	2830	4010	3290
	1..15.1-1D.6	1670	610	2100	1040	2360	1300	–	–	**1..16.1-1D.6**	2320	1600	3020	2300	3480	2760	–	–
	1..15.1-1D.7	–	–	2050	990	–	–	–	–	**1..16.1-1D.7**	–	–	2980	2260	–	–	–	–
	1..15.3-1D.2	1740	680	2130	1070	2420	1360	–	–	**1..16.3-1D.2**	2380	1660	3050	2330	3550	2830	–	–
	1..15.3-1D.3	1720	660	–	–	–	–	–	–	**1..16.3-1D.3**	2370	1650	–	–	–	–	–	–
	1..15.3-1D.4	1670	610	2100	1040	2360	1300	–	–	**1..16.3-1D.4**	2320	1600	3020	2300	3480	2760	–	–
180	**1..15..-1E.2**	1640	880	2100	1340	–	–			**1..16..-1E.2**	2860	1710	3660	2510	–	–	–	–
	1..15..-1E.4	–	–	2070	1310	2420	1660	2740	1980	**1..16..-1E.4**	–	–	3630	2480	4230	3080	4770	3620
	1..15..-1E.6	1630	870	2070	1310	2420	1660	2660	1900	**1..16..-1E.6**	2850	1700	3630	2480	4230	3080	4690	3540
200	**1..15..-2A.4**	2380	1230	–	–	3510	2360	–	–	**1..16..-2A.4**	3390	2580	–	–	5210	4400	–	–
	1..15..-2A.5	2340	1190	3020	1870	3470	2320	3920	2770	**1..16..-2A.5**	3340	2530	4430	3620	5170	4360	5880	5070
	1..15..-2A.6	2340	1190	3020	1870	3450	2300	3860	2710	**1..16..-2A.6**	3340	2530	4430	3620	5150	4340	5810	5000
225	**1..15..-2B.0**	–	–	3020	1980	–	–	3950	2950	**1..16..-2B.0**	–	–	4950	3900	–	–	6600	5550
	1..15..-2B.2	2350	1300	3020	1980	3400	2400	3900	2900	**1..16..-2B.2**	3800	2750	4950	3900	5750	4700	6550	5500
	1..15..-2B.6	2350	1300	3020	1980	3400	2400	3800	2800	**1..16..-2B.6**	3800	2750	4900	3850	5700	4650	6500	5450
250	**1..15..-2C.2**	2600	1750	3200	2400	3750	3000	4350	3550	**1..16..-2C.2**	4750	3150	6050	4450	7100	5500	8100	6500
	1..15..-2C.6	2550	1700	3200	2400	3750	3000	4300	3500	**1..16..-2C.6**	4750	3150	6050	4450	7100	5500	8 000	6400
280	**1..15..-2D.0**	4500	2900	6700	5100	7900	6350	8800	7200	**1..16..-2D.0**	4500	2900	6700	5100	7900	6350	8800	7200
	1..15..-2D.2	4450	2850	6600	5000	7850	6300	8800	7200	**1..16..-2D.2**	4450	2850	6600	5000	7850	6300	8800	7200
	1..15..-2D.6	4450	2850	6600	5000	7850	6300	8800	7200	**1..16..-2D.6**	4450	2850	6600	5000	7850	6300	8800	7200
315	**1..15..-3A.0**	5000	2900	7550	5500	8900	6850	9800	7800	**1..16..-3A.0**	5000	2900	7550	5500	8900	6850	9800	7800
	1..15..-3A.2	4800	2700	7300	5250	8900	6850	9800	7800	**1..16..-3A.2**	4800	2700	7300	5250	8900	6850	9800	7800
	1..15..-3A.4	4750	2650	7300	5250	8550	6500	9500	7500	**1..16..-3A.4**	4750	2650	7300	5250	8550	6500	9500	7500
	1..15..-3A.5	4700	2600	7050	5000	8250	6200	9300	7300	**1..16..-3A.5**	4700	2600	7050	5000	8250	6200	9300	7300
	1..15..-3A.6	–	–	–	–	8250	6200	9100	7100	**1..16..-3A.6**	–	–	–	–	8250	6200	9100	7100

© Innomotics 2024

Overview

Frame size	Type	2-pole – 3000 rpm Load Tension N	2-pole – 3000 rpm Load Thrust N	4-pole – 1500 rpm Tension N	4-pole – 1500 rpm Thrust N	6-pole – 1000 rpm Tension N	6-pole – 1000 rpm Thrust N	8-pole – 750 rpm Tension N	8-pole – 750 rpm Thrust N
1LE55 and 1MB55 – Basic Line									
225	**1LE55..-2B.0**	–	–	3020	1980	–	–	3950	2950
	1LE55..-2B.2	2350	1300	3020	1980	3400	2400	3900	2900
	1LE55..-2B.6	2350	1300	3020	1980	3400	2400	3800	2800
250	**1LE55..-2C.2**	2630	1720	3200	2400	3750	3000	4350	3550
	1LE55..-2C.6	2550	1700	3200	2320	3750	2950	4300	3500
280	**1LE55..-2D.0**	4500	2900	6700	4700	7900	5950	8800	7050
	1LE55..-2D.2	4450	2850	6600	4650	7850	5900	8800	7000
	1LE55..-2D.6	4450	2850	6600	4530	7850	5800	8800	6950
315	**1LE55..-3A.0**	5800	3400	8000	5600	9600	7200	9700	7300
	1LE55..-3A.2	5700	3300	8200	5800	9500	7300	9800	7400
	1LE55..-3A.4	5600	3200	7900	5400	9400	7400	9900	7500
	1LE55..-3A.5	5500	3100	7800	5400	9300	7500	10000	7600
	1LE55..-3A.6	5400	3000	7750	5400	9200	7600	10100	7700
	1LE55..-3A.7	5200	2800	7750	5400	9100	6750	10200	7850
	1LE55..-3A.8	–	–	–	–	9000	6650	10500	7700
355	**–**	–	–	–	–	–	–	–	–
	–	–	–	–	–	–	–	–	–
	–	–	–	–	–	–	–	–	–
	–	–	–	–	–	–	–	–	–
	–	–	–	–	–	–	–	–	–
400	**1LE55..-4A.3**	3200	1600	6500	4200	7300	5000	8700	6400
	1LE55..-4A.5	3100	1500	6400	4100	7100	4800	8400	6100
	1LE55..-4A.7	3000	1300	6200	3900	6900	4600	8100	5800
450	**1LE55..-4B.3**	4300	2000	7500	3400	850	4400	10000	5900
	1LE55..-4B.5	4100	1800	7400	3300	8300	4200	9700	5600
	1LE55..-4B.7	3900	1600	7100	3000	8100	4000	9300	5200

Type	2-pole – 3000 rpm Load Tension N	2-pole – 3000 rpm Load Thrust N	4-pole – 1500 rpm Tension N	4-pole – 1500 rpm Thrust N	6-pole – 1000 rpm Tension N	6-pole – 1000 rpm Thrust N	8-pole – 750 rpm Tension N	8-pole – 750 rpm Thrust N
1LE56 and 1MB56 – Performance Line								
–	–	–	–	–	–	–	–	–
–	–	–	–	–	–	–	–	–
–	–	–	–	–	–	–	–	–
–	–	–	–	–	–	–	–	–
–	–	–	–	–	–	–	–	–
–	–	–	–	–	–	–	–	–
–	–	–	–	–	–	–	–	–
–	–	–	–	–	–	–	–	–
–	–	–	–	–	–	–	–	–
–	–	–	–	–	–	–	–	–
–	–	–	–	–	–	–	–	–
–	–	–	–	–	–	–	–	–
–	–	–	–	–	–	–	–	–
–	–	–	–	–	–	–	–	–
–	–	–	–	–	–	–	–	–
–	–	–	–	–	–	–	–	–
–	–	–	–	–	–	–	–	–
1LE56..-3A.6	5400	3000	7750	5400	–	–	–	–
1LE56..-3A.7	9100	6750	10200	7850	5200	2800	7750	5400
1LE56..-3A.8	–	–	–	–	9000	6650	10050	7700
1LE56..-3B.1	–	–	–	–	–	–	5000	3200
1LE56..-3B.2	–	–	–	–	8800	5000	9900	6000
1LE56..-3B.3	11000	7100	5000	3200	8750	4950	–	–
1LE56..-3B.4	9800	5900	10900	7000	5000	3200	–	–
1LE56..-3B.5	8700	4900	9800	5900	–	–	–	–
–	–	–	–	–	–	–	–	–
–	–	–	–	–	–	–	–	–
–	–	–	–	–	–	–	–	–
–	–	–	–	–	–	–	–	–
–	–	–	–	–	–	–	–	–

1LE15, 1MB15 and 1LE5 motors in horizontal type of construction – bearings reinforced at both ends – order code **L25**

Frame size	Type	2-pole – 3000 rpm Load Tension N	2-pole – 3000 rpm Load Thrust N	4-pole – 1500 rpm Tension N	4-pole – 1500 rpm Thrust N	6-pole – 1000 rpm Tension N	6-pole – 1000 rpm Thrust N	8-pole – 750 rpm Tension N	8-pole – 750 rpm Thrust N
1LE15, 1MB15 – Basic Line									
71/80/90		Available soon							
100	**1..15.1-1A.4**	1440	880	1820	1260	2110	1550	2380	1820
	1..15.1-1A.5	–	–	1800	1240	–	–	2370	1810
	1..15.1-1A.6	1430	870	1780	1220	2090	1530	–	–
	1..15.3-1A.4	1430	870	1780	1220	–	–	–	–
	1..15.3-1A.5	–	–	1780	1220	–	–	–	–
112	**1..15.1-1B.2**	1430	870	1810	1250	2110	1550	2370	1810
	1..15.1-1B.6	1410	850	1790	1230	2090	1530	–	–
	1..15.3-1B.2	1410	850	1790	1230	2090	1530	–	–
132	**1..15.1-1C.0**	2330	1010	2890	1570	3340	2020	3710	2390
	1..15.1-1C.1	2320	1000	–	–	–	–	–	–
	1..15.1-1C.2	–	–	2870	1550	3320	2000	3680	2360
	1..15.1-1C.3	–	–	–	–	3290	1970	–	–
	1..15.1-1C.6	2280	960	2820	1500	3250	1930	–	–
	1..15.3-1C.0	2320	1000	2820	1500	3290	1970	–	–
	1..15.3-1C.1	2280	960	–	–	–	–	–	–
	1..15.3-1C.2	–	–	2820	1500	3290	1970	–	–
	1..15.3-1C.3	–	–	–	–	3250	1930	–	–
160	**1..15.1-1D.2**	2400	1680	3100	2380	3610	2890	4090	3370
	1..15.1-1D.3	2380	1660	–	–	–	–	4040	3320
	1..15.1-1D.4	2370	1650	3050	2330	3550	2830	4010	3290
	1..15.1-1D.6	2320	1600	3020	2300	3480	2760	–	–
	1..15.1-1D.7	–	–	2980	2260	–	–	–	–
	1..15.3-1D.2	2380	1660	3050	2330	3550	2830	–	–
	1..15.3-1D.3	2370	1650	–	–	–	–	–	–
	1..15.3-1D.4	2320	1600	3020	2300	3480	2760	–	–

Frame size	Type	2-pole – 3000 rpm Load Tension N	2-pole – 3000 rpm Load Thrust N	4-pole – 1500 rpm Tension N	4-pole – 1500 rpm Thrust N	6-pole – 1000 rpm Tension N	6-pole – 1000 rpm Thrust N	8-pole – 750 rpm Tension N	8-pole – 750 rpm Thrust N
1LE15, 1MB15 – Basic Line									
180	**1..15..-1E.2**	2860	1710	3660	2510	–	–	–	–
	1..15..-1E.4	–	–	3630	2480	4230	3080	4770	3620
	1..15..-1E.6	2850	1700	3630	2480	4230	3080	4690	3540
200	**1..15..-2A.4**	3390	2580	–	–	5210	4400	–	–
	1..15..-2A.5	3340	2530	4430	3620	5170	4360	5880	5070
	1..15..-2A.6	3340	2530	4430	3620	5150	4340	5810	5000
225	**1..15..-2B.0**	–	–	4950	3900	–	–	6600	5550
	1..15..-2B.2	3800	2750	4950	3900	5750	4700	6550	5500
	1..15..-2B.6	3800	2750	4900	3850	5700	4650	6500	5450
250	**1..15..-2C.2**	4750	3150	6050	4450	7100	5500	8100	6500
	1..15..-2C.6	4750	3150	6050	4450	7100	5500	8 00 0	6400

Frame size	Type	2-pole – 3000 rpm Load Tension N	2-pole – 3000 rpm Load Thrust N	4-pole – 1500 rpm Tension N	4-pole – 1500 rpm Thrust N	6-pole – 1000 rpm Tension N	6-pole – 1000 rpm Thrust N	8-pole – 750 rpm Tension N	8-pole – 750 rpm Thrust N
1LE5									
250	**1..15..-2C.2**	4750	2970	6050	4300	7100	5400	8100	6500
	1..15..-2C.6	4750	2970	6050	4200	7100	5350	8000	6350

For frame sizes > 250 standard version.

© Innomotics 2024

Introduction

T-Drain – adjustable drainage of condensed water

Overview

The drainage of condensed water is an important aspect of proper motor maintenance.

1

Drainage of condensed water is made easy by rotating the outer cap.

If there are condensation drain holes present, these must be opened at regular intervals, depending on climatic conditions and in accordance with the motor operating instructions.

"Modifiable T-Drain" is closed on delivery of the motor and corresponds to IP55/IP56 degree of protection.

When opened, it corresponds to IP45/IP46 degree of protection. The opened T-Drain can be used for continuous drainage of condensed water in environments with low amounts of dust.

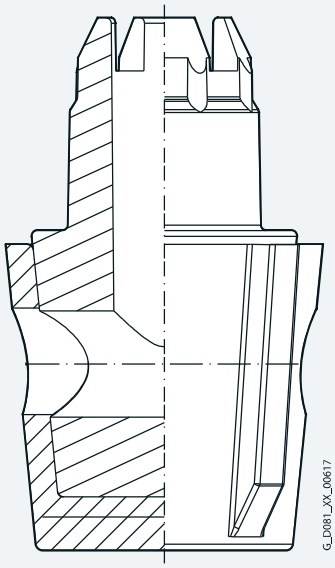

Note:
Condensation drain holes are not possible in motors with the types of protection Ex db and Ex db eb.

A screwed-on cover (made of sheet metal or plastic depending on the shaft height) is included as standard for horizontal types of construction and types of construction with shaft pointing upwards (14th position of the Article No. letter **A, T, U, V, D, F, H, J, K, L, N**) in combination with condensation drainage holes, order code (**H03**) to facilitate assembly/ disassembly.

When the motors are used or stored outdoors, we recommend that they be kept under some sort of additional cover so that they are not subjected to direct intensive solar radiation, rain, snow, ice or dust over a long period of time. In such cases, technical consultation may be appropriate.

When the motors are used outdoors or in a corrosive environment, it is recommended that non-rusting screws are used externally.
Order code **H07**

Vibration-proof version
Continuous vibration resistance to class 3M4 according to IEC 721-3-3:1994 (order code **H02** in combination with order code **G04**, **G05**, **G06**, **G11,** and **G12** or **F70** on request only).
Order code **H02**

For availability of individual options for the relevant motor series, see section "Special versions" in the respective sections of the catalog.

© Innomotics 2024

Overview

1LE10, 1MB10 and 1PC10 motors without feet have four cast lifting eyes as standard, each offset by 90°; in the case of screwed-on feet, two lifting eyes are covered by the feet, so in this case only two lifting eyes are available for use. This data is only valid up to frame size 200.

Housing material			
Motor series	Frame size	Housing material	Housing feet
1LE10, 1PC1 [2]	63 ... 160	Aluminum alloy	cast [1]
	180 ... 200	Aluminum alloy	screwed on [1]
1MB10	100 ... 160	Aluminum alloy	cast [1]
1LE15 **1MB15** **1PC1301** [3]	71 ... 315	Cast iron	cast [1]
1LE5 **1MB5**	225 ... 450	Cast iron	cast
1LE16 **1MB16**	100 ... 315	Cast iron	cast [1]

Motor screws:

H06: External screws, bolts and unpainted materials made of stainless steel (V4A) including rating plate, outer screws, grounding, and options with order codes L19, L23, Q01.

H07: Rust-resistant screws (externally) including outer motor screws made of common stainless steel.

H30: Adjustment screws for feet in horizontal installation including 4 threads in the motor feet; adjustment screws not in the scope of supply.

Arrangement of lifting eyes/eyebolts (standard)

Frame size	Terminal box position	Cast-iron motors	Aluminum motors	Arrangement of eyebolts	Thread size
63	–	–	None	–	–
71	–	None	None	–	M8
80	Short housing	None	None	–	M8
	Top (long housing)	Two eyebolts		Left/right center	
	Left/right (long housing)	One eyebolt		Top center	
90	Top	Two eyebolts	None	Left/right center	M8
	Left/right	One eyebolt		Top center	
100		Depending on type of construction [4]	Lifting eyes	Top;	M8
				Left DE side/	
112				Right NDE side [10]	
132					
160					M10
180		Two eyebolts [10]			M12
200					M16
225		Two eyebolts [11]	–	[5] [6] [7]	M16
250					M20
280					
315 S/M [12]					M24
315 L		Four eyebolts		Top;	
315 L (1LE5)		Two eyebolts		Left/right DE and NDE side [8] [9]	M30
355 M/L (1LE5)					
400					
450					

1) Basic version, cast feet: Special version "Screwed-on feet (instead of cast)" with digits **5**, **6**, and **7** in the 16th position of Article No. or digit **4** with order code **H01**. Screwed-on feet as standard for 1LE10 motors in frame sizes 180 and 200 and motors with increased power.

2) Aluminum motors in frame sizes 80 and 90 and 1PC10 motors in frame sizes 100 to 160 without lifting eyes. Aluminum motors in frame sizes 100 to 200 with cast lifting eyes (does not apply to 1PC10 and 1MB10 motors in frame sizes 180 and 200).

3) 1LE16 motors frame size 100 and above, 1PC1301 motors frame size 180 and above.

4) Two eyebolts for
-IM B5, IM B14, IM V1 or
-IM B34, IM B35 with **H01** or left/right, side terminal box position.
Lifting eyes for
-IM B3 or
-IM B34, IM B35 without **H01** or non-side left/right terminal box position.

5) For IM B3; IM B5: top; DE side left / NDE side right.
With rotation of the terminal box through 180° (R12): top; NDE side left / DE side right.

6) For IM V1: top; NDE side right; down; NDE side left.

7) For IM V3: top; DE side left; down; DE side right.

8) For IM V1: NDE side, left/right; top/bottom.

9) For IM V3: DE side, left/right; top/bottom.

10) With rotation of the terminal box through 180° (R12): top; NDE side left / DE side right.

11) Motors with brakes have four top eyebolts.
For IM V1: NDE side, left/right; top/bottom.
For IM V3: DE side, left/right; top/bottom.

12) The assignment 315 L is used for 1000 kg and over.

© Innomotics 2024

Introduction

Preparation for mountings

Overview

Brakes as well as rotary encoders of the "modular and special technology" can be retrofitted. The motor must be prepared for this. This is possible for all 1LE. motors (with the exception of 1LE1 with order code **F90** – version "Forced-air cooled motors without external fan and fan cover").

Preparation of the shaft extension at NDE can be ordered with the option "Prepared for mountings, only center hole", order code **G40** for the following frame sizes and mountings:

- Frame sizes 80 to 450: brakes with order code **F01** and **F04**
- Frame sizes 71 and 90: only rotary encoders with order codes **G11** or **G12** from the "modular technology" range
- Frame sizes 100 to 450: all rotary encoders from the "modular and special technology" ranges

Dimensions of center holes

Frame size	∅	L (drilling depth)
100	16^{H7}	34
112	16^{H7}	34
132	22^{H8}	39
160	28^{H8}	42

The length of the motor does not change because the shaft extension is still under the fan cover.

For motors ordered with order code **G40**, the following conversion combinations are possible:

- Frame sizes 71 and 90:
  either brakes with order code **F01** and **F04** or rotary encoders
  from the "modular technology" range. The combination of brake (**F01**) and rotary encoder is not possible.
- Frame sizes 100 to 450:
  Brakes with order code **F01** or rotary encoders from the "modular and special technology" range. The combination of brake (**F01**) and rotary encoder is possible.

Conversion is performed exclusively by the authorized contractual partners of Innomotics.

For motors of series 1LE15, 1LE16, and 1LE5 frame sizes 100 to 450, grounding brushes are available for converter operation. Order code **L52**. Please contact your local Innomotics office for advice.

For mountings, such as rotary encoders, supplied by the customer, the following applies:

For the Sendix 5020 rotary encoders, order code **G11** and **G12**

from the "modular technology" this preparation of the shaft extension on NDE can be ordered with the option "Prepared for mounting with shaft D12".
Order code **G41**
The length of the motor increases by ∆l due to order code **G41**.
For an explanation of the additional dimensions and weights, see "Modular technology" "Dimensions and weights".

For the rotary encoders:

- LL 861 900 220, order code **G04**
- HOG 9 DN 1024 I, order code **G05**
- HOG 10 D 1024 I, order code **G06**

from the "special technology" this preparation of the shaft extension on NDE can be ordered with the option "Prepared for mounting with shaft D16" for motors of frame sizes 100 to 160 only.
Order code **G42**
The length of the motor increases by ∆l due to order code **G42**.
For an explanation of the additional dimensions and weights, see "Modular technology" "Dimensions and weights" from page 1/129.

Motors that are prepared for mountings supplied by the customer (order codes **G41**, **G42**) are supplied without a protective cover as standard. These mountings can be installed by the customer.

If a protective cover is requested as a cover or mechanical protection for mountings provided by the customer, this can be ordered with order code **G43**.
This protective cover is designed and mounted differently as described below according to frame size:

Frame sizes 71 to 90 and 180 to 200:
Motors ordered with order code **G43** are fitted as standard with a screwed-on cover (made of sheet metal or plastic depending on shaft height). The protective cover is mounted in the factory. To install the mountings supplied by the customer, the protective cover must be removed beforehand by unscrewing the external fixing screws and reattached afterwards. Protective covers for motors of these frame sizes are not suitable for mountings that correspond to the shape and size of the rotary encoders of the "special technology" (**G04**, **G05**, **G06**, see above).

Frame sizes 100 to 450:
The protective cover must be installed by the customer in accordance with the assembly instructions supplied. It has supports of varying length that can be used for installation according to the height of the planned mountings.

The standard protective cover (order code **H00**) is not suitable for protection of additional mountings, such as rotary encoders.

Order codes **G40**, **G41**, **G42** are not possible in conjunction with order code **L00** – vibration severity grade B.

Order code **G43** is only appropriate in combination with order codes **G41** and **G42**, and not in combination with **G40**.

© Innomotics 2024

Overview

The 1LE and 1FP motors (with the exception of 1LE1 and 1LE5 with order code **F90** – version "Forced-air cooled motors without external fan and fan cover" and 1PC1) can be used in a much wider range of applications (e.g. as motors with brakes) if the following modules are mounted:

_ Separately driven fan

_ Brake

_ Rotary pulse encoder

The brake must always be mounted in the factory for safety reasons. The rotary pulse encoder and/or the separately driven fan can also be retrofitted.

The degree of protection of the motors with modular technology is IP55. Higher degrees of protection on request.

Attaching rotary pulse encoder, brake, and separately driven fan increases the length of the motor by dimension ∆l.
For explanations of the additional dimension and weights, see "Mounting technology" and "Dimensions and weights" from page 1/129.

Separately driven fan

The use of a separately driven fan is recommended to increase motor utilization at low speeds and to limit noise generation at speeds significantly higher than the synchronous speed. Both of these results can only be achieved with converter operation. Please inquire about traction and vibratory operation.

The separately driven fan can be supplied already fitted, order code **F70**. There is no automatic adjustment of the voltage for the separately driven fan when ordering a "special voltage" for the motor. This must be specified in addition using the **Y81** option.
It can also be ordered separately and retrofitted. For selection information and article numbers, see the section "Accessories" (available soon). A rating plate listing all the important data is fitted to the separately driven fan. Please note the direction of rotation of the separately driven fan (axial-flow fan) when connecting it. Admissible coolant temperatures CT_{min} −25 °C, CT_{max} +65 °C [1], for frame sizes 400 and 450 coolant temperatures CT_{min} −30 °C, CT_{max} +40 °C, lower/higher coolant temperatures are available on request.
When the separately driven fan is mounted, the length of the motor increases by ∆l. For explanations of the additional dimension and weights, see "Mounting technology" and "Dimensions and weights" from page 1/129.

Technical specifications of separately driven fans (according to tolerances of EN 60034-1)

Motor series	Frame size	Rated voltage range		Frequency	P_{max}	I_{max}
		V		Hz	kW	A
1LE1	63	1 AC	230 to 277	50	0.046	0.18
		3 AC	200 to 303 Δ	50	0.028	0.15
		3 AC	346 to 525 Y	50	0.028	0.09
		1 AC	230 to 277	60	0.054	0.21
		3 AC	220 to 332 Δ	60	0.029	0.14
		3 AC	380 to 575 Y	60	0.029	0.08
1LE1	71	1 AC	230 to 277	50	0.048	0.18
		3 AC	200 to 303 Δ	50	0.029	0.15
		3 AC	346 to 525 Y	50	0.029	0.09
		1 AC	230 to 277	60	0.056	0.21
		3 AC	220 to 332 Δ	60	0.028	0.13
		3 AC	380 to 575 Y	60	0.028	0.07
1LE1	80	1 AC	230 to 277	50	0.048	0.19
		3 AC	200 to 303 Δ	50	0.033	0.16
		3 AC	346 to 525 Y	50	0.033	0.09
		1 AC	230 to 277	60	0.059	0.22
		3 AC	220 to 332 Δ	60	0.036	0.13
		3 AC	380 to 575 Y	60	0.036	0.07
1LE1	90	1 AC	220 to 277	50	0.059	0.29
		3 AC	200 to 303 Δ	50	0.078	0.39
		3 AC	346 to 525 Y	50	0.078	0.22
		1 AC	220 to 277	60	0.061	0.23
		3 AC	220 to 332 Δ	60	0.071	0.32
		3 AC	380 to 575 Y	60	0.071	0.18
1LE1/ 1MB1	100	1 AC	220 to 277	50	0.062	0.29
		3 AC	200 to 303 Δ	50	0.08	0.37
		3 AC	346 to 525 Y	50	0.08	0.21
		1 AC	220 to 277	60	0.073	0.28
		3 AC	220 to 332 Δ	60	0.08	0.3
		3 AC	380 to 575 Y	60	0.08	0.18
1LE1/ 1MB1	112	1 AC	220 to 277	50	0.064	0.27
		3 AC	200 to 303 Δ	50	0.087	0.35
		3 AC	346 to 525 Y	50	0.087	0.2
		1 AC	220 to 277	60	0.088	0.36
		3 AC	220 to 332 Δ	60	0.093	0.29
		3 AC	380 to 575 Y	60	0.093	0.17
1LE1/ 1MB1	132	1 AC	230 to 277	50	0.121	0.52
		3 AC	200 to 303 Δ	50	0.153	0.67
		3 AC	346 to 525 Y	50	0.153	0.39
		1 AC	230 to 277	60	0.150	0.56
		3 AC	220 to 332 Δ	60	0.161	0.56
		3 AC	380 to 575 Y	60	0.161	0.33
1LE1/ 1MB1	160 to200	1 AC	230 bis 277	50	0.249	1.03
		3 AC	200 bis 303 Δ	50	0.301	1.33
		3 AC	346 bis 525 Y	50	0.301	0.77
		1 AC	230 bis 277	60	0.367	1.45
		3 AC	220 bis 332 Δ	60	0.364	1.10
		3 AC	380 bis 575 Y	60	0.364	0.64
1LE1/ 1MB1	225 to 315	3 AC	230 Δ	50	0.75	2.7
		3 AC	400 Y	50	0.75	1.56
		3 AC	460 Y	60	0.86	1.63
1LE5	250 to 280	3 AC	230 Δ	50	0.75	2.7
		3 AC	400 Y	50	0.75	1.56
		3 AC	460 Y	60	0.86	1.63
1LE5	315 2-polig	3 AC	230 Δ	50	1.1	3.95
		3 AC	400 Y	50	1.1	2.25
		3 AC	460 Y	60	1.27	2.25
1LER5	315 4-, 6-, 8-polig	3 AC	230 Δ	50	0.75	2.7
		3 AC	400 Y	50	0.75	1.56
		3 AC	460 Y	60	0.86	1.63
1LE5	355	3 AC	230 Δ	50	1.1	3.95
		3 AC	400 Y	50	1.1	2.25
		3 AC	460 Y	60	1.27	2.25
1LE5	400	3 AC	200 bis 240 Δ	50	2.20	7.70
		3 AC	380 bis 420 Y	50	2.20	4.45
		3 AC	440 bis 480 Y	60	2.54	4.35
1LE5	450	3 AC	200 bis 240 Δ	50	4.00	14.00
		3 AC	380 bis 420 Y	50	4.00	8.00
		3 AC	440 bis 480 Y	60	4.55	7.90

[1] For single-phase variants (1 AC) of frame size 160, the admissible coolant temperature CT_{max} is +50 °C.

© Innomotics 2024

Introduction

Overview

For article numbers and type details, see operating instructions.

Sound-power level of the motors under a load, 50 Hz

Frame size	2-pole	4-pole	6-pole	8-pole
	L_{WA} dB (A)	L_{WA} dB (A)	L_{WA} dB (A)	L_{WA} dB (A)
63	70	70	70	70
71	72	72	72	72
80	79	79	79	79
90	79	79	79	79
100	84	84	84	84
112	84	84	84	84
132	84	84	84	84
160	87	87	87	87
180	87	87	87	87
200	87	87	87	87
225	90	87	87	87
250	90	87	87	87
280	90	87	87	87
315	92	92	95	95

Brakes

The brakes with order code **F01** (**F02** brake for increased frequency of operation for Innomotics GP motors on request) are designed to be spring-operated brakes. When the brake is ordered, the supply voltage must be specified. For an explanation of the supply voltage, see the descriptions of each brake model in "Modular technology".

For the design of the braking time, run-on revolutions, braking energy per braking procedure as well as the lifetime of the brake linings, see "Configuration of motors with brakes" on page 1/108.

When a brake is mounted, the length of the motor increases by ΔI. For explanations of the additional dimension and weights, see "Mounting technology" and "Dimensions and weights" from page 1/129.

The brake can be retrofitted by authorized partners. The motor must be prepared for this. When the motor is ordered, the option "Prepared for mountings, center hole only" order code ***G40*** *must be specified (see "Mechanical version and degrees of protection" on page 1/94).*

Ambient temperature

- −40 °C to +45 °C (with nominal excitation) for SFB-SH brake
- −40 °C to +75 °C (with double excitation) for SFB-SH brake
- −20 °C to +40 °C holding/operating brake (standard BFK458)
- up to +60 °C only as holding brake
- −20 °C to +60 °C holding/operating brake only for FDX brake
- −30 °C to +60 °C holding/operating brake only for KFB brake

Definition of duty type

- Operating brake:
  The motor shaft can be braked from full operating speed down to zero speed of the motor. All the kinetic energy produced by the drive train is converted to heat by friction during braking. Braking energy is produced at $n > 0$ rpm. The maximum permissible switching frequency must be taken into account. When this brake is used, installation of a separately driven fan is recommended in order to ensure adequate cooling when the motor is at a standstill. The operating brake is also capable of functioning as a holding brake.
- Holding brake:
  The purpose of braking or "holding" the motor shaft is merely to suppress unintended rotation caused by externally applied torque forces, e.g. when a load is suspended from a crane rope drum. The holding brake is primarily deployed when the motor is at a standstill ($n = 0$ rpm) by holding the motor shaft or is close to $n = 0$ rpm and coasting down to a standstill. As a result, no additional braking energy or braking heat is transferred to the motor.

Note:
A holding brake must not be used as an operating brake as it could then cause danger to life and damage to property.

Bridge rectifier / half-wave rectifier

Brakes are connected through a standard bridge or half-wave rectifier or directly to the BFK458-/SFB-SH brake. See the circuit diagrams below.

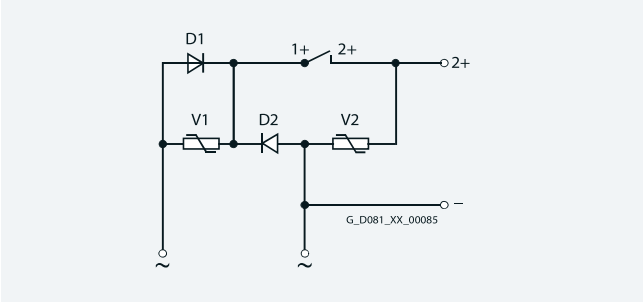

Half-wave rectifier 400 V AC

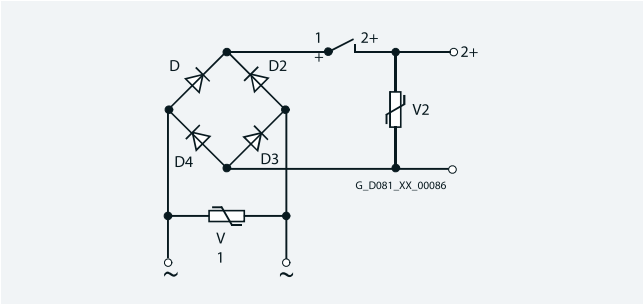

Rectifier bridge 230 V AC

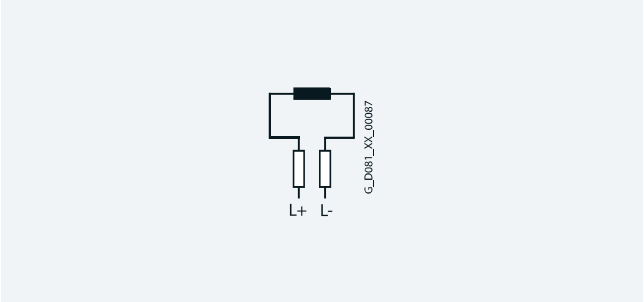

Brake connection for 24 V DC

© Innomotics 2024

Overview

BFK458 spring-operated disk brake

Motor series

This brake is the standard brake for 1LE1/1FP1 motors in frame sizes 63 to 225 (except for 1LE1 with order code **F90** version "Forced-air cooled motors without external fan and fan cover").

Other characteristics of the BFK458 brake

The BFK458 brake has IP55 degree of protection.

Please inquire if motors with brakes are to be operated below the freezing point or in conjunction with very humid environments (e.g. close to the sea) with long standstill times. Please also inquire if motors with brakes are to be used for low-speed converter operation.

Design and mode of operation

The brake takes the form of a single-disk brake with two friction surfaces.

The braking torque is generated by friction when pressure is applied by one or more pressure springs in the de-energized state. The brake is released electromagnetically.

When the motor brakes, the rotor which can be axially shifted on the hub or the shaft is pressed via the armature disk against the friction surface by means of the springs. In the braked state, there is a gap S_{Gap} between the armature disk and the solenoid component. To release the brake, the solenoid is energized with DC voltage. The resulting magnetic force pulls the armature disk against the spring force on to the solenoid component. The spring force is then no longer applied to the rotor, which can rotate freely.

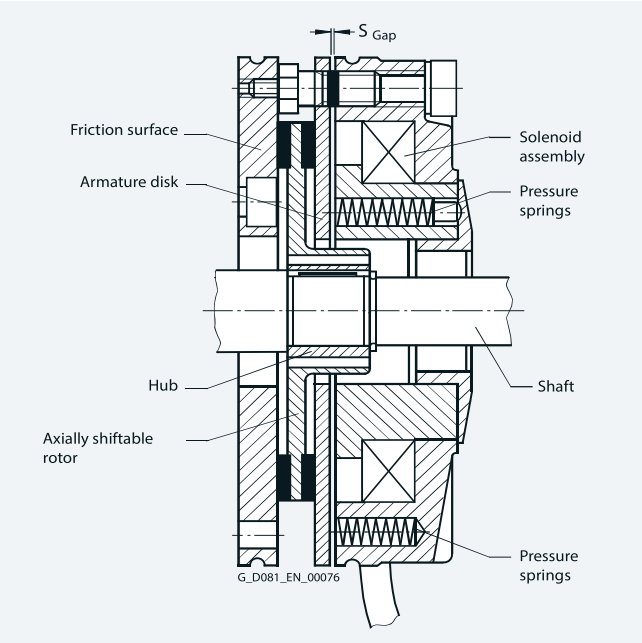

Design of the BFK458 spring-operated disk brake

Rating plate

The following brake data is specified on the motor rating plate:

- Brake type
- Supply voltage
- Frequency
- Current
- Temperature class
- Braking torque

Voltage and frequency

The solenoids and the brake rectifier are designed for connection to the following voltages or can be supplied for the following voltages:

- Brake supply voltage 24 V DC
  Order code **F10**
- Brake supply voltage 230 V AC
  Order code **F11**
- Brake supply voltage 400 V AC
  (directly at the terminal strip)
  Order code **F12**
- Brake supply voltage 180 V DC
  Order code **F17**
- Brake supply voltage 205 V DC
  Order code **F18**

When 60 Hz is used, the voltage for the brake must not be increased!

Order codes **F10**, **F11, F12, F17, and F18** must only be used in conjunction with order code **F01**

Lifetime of the brake lining

The braking energy L_N until readjustment of the brake depends on various factors. The main influencing factors include the masses to be braked, the operating speed, the switching frequency, and therefore the temperature at the frictional surfaces. This means it is not possible to specify a value for the friction energy until readjustment that is valid for all operating conditions.

When used as an operating brake, the specific frictional surface wear (wear volume for the frictional work) is approximately 0.05 to 2 cm^3/kWh.

© Innomotics 2024

Introduction

Overview

Operating values for spring-operated brakes with standard excitation													Service capability of the brake	
For motor frame size	Brake type	Rated braking torque at 100 rpm	Rated braking torque at 100 rpm in % at the following speeds			Supply voltage	Current/ power input [1]		Brake application time t_2 [2]	Brake release time	Brake moment of inertia	Noise level L_p with rated air gap	Lifetime L of the brake lining	Air gap S_{Gap} adjustment required after braking energy L_N
			1500 rpm	3000 rpm	Max. speed									
		Nm	%	%	%	V	A	W	ms	ms	kgm²	dB (A)	Nm · 10⁶	Nm · 10⁶
63	**BFK458-06**	5	87	80	65	AC 230 AC 400 DC 24	0.1 0.11 0.83	20	25	56	0.000013	77	105	16
71	**BFK458-06**	5	87	80	65	AC 230 AC 400 DC 24	0.1 0.11 0.83	20	25	56	0.000013	77	105	16
80	**BFK458-08**	10	85	78	65	AC 230 AC 400 DC 24	0.12 0.14 1.04	25	26	70	0.000045	75	270	29
90	**BFK458-10**	20	83	76	66	AC 230 AC 400 DC 24	0.15 0.17 1.25	32	37	90	0.00016	75	740	79
100	**BFK458-12**	40	81	74	66	AC 230 AC 400 DC 24	0.2 0.22 1.67	40	43	140	0.00036	80	1350	115
112	**BFK458-14**	60	80	73	65	AC 230 AC 400 DC 24	0.25 0.28 2.1	53	60	210	0.00063	77	1600	215
132	**BFK458-16**	100	79	72	65	AC 230 AC 400 DC 24	0.27 0.31 2.3	55	50	270	0.0015	77	2450	325
160	**BFK458-20**	260	75	68	65	AC 230 AC 400 DC 24	0.5 0.47 4.2	100	165	340	0.0073	79	7300	935
180	**BFK458-20**	315	75	68	65	AC 230 AC 400 DC 24	0.5 0.56 4.2	100	152	410	0.0073	79	5500	470
200, 225 [3]	**BFK458-25**	400	73	68	65	AC 230 AC 400 DC 24	0.55 0.61 4.6	110	230	390	0.0200	93	9450	1260

[1] For 400 V AC and for 24 V DC, the power can deviate by up to +10 % as a function of the selected supply voltage.

[2] The specified switching times are valid for switching on the DC side with a rated release travel and with the coil already warm. They are average values, which may vary depending on factors such as the rectifier type and the release travel. The brake application time for switching on the AC side, for example, is approximately 6 times longer than for switching on the DC side.

[3] Not possible in combination with order code **D02** and **D03** for SH225.

© Innomotics 2024

Overview

Maximum admissible speeds

The maximum admissible speeds from which emergency stops can be made are listed in the next table. These speeds should be considered as guide values and must be checked for the specific operating conditions.

The maximum admissible friction energy depends on the switching frequency and is shown for the individual brakes in the following diagram. Increased wear can be expected when the brakes are used for emergency stops.

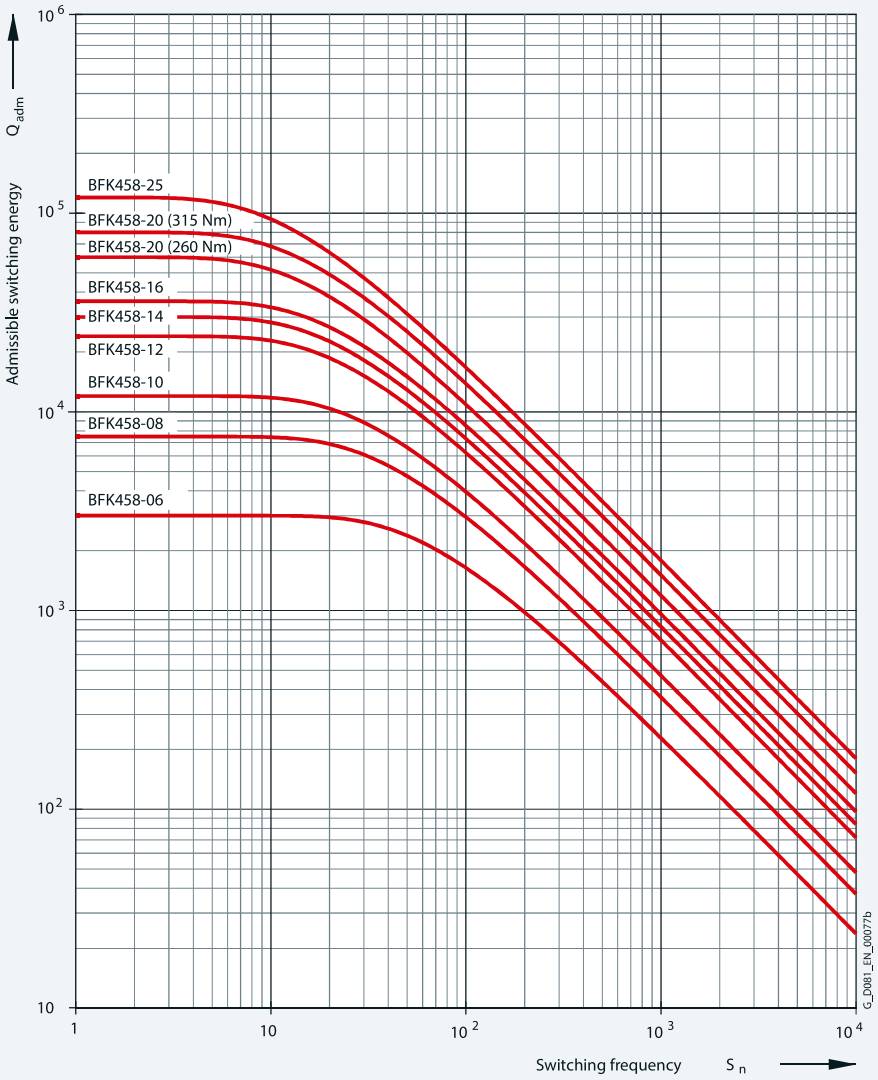

For motor frame size	Brake type	Maximum admissible speeds: Max. adm. operating rpm if max. operating energy utilized	Max. adm. no-load rpm with emergency stop function: for horizontal mounting position	for vertical mounting position	Changing the braking torque: Reduction per notch	Dimension "O_1"	Min. braking torque	Readjusting the air gap: Rated air gap $S_{Gap\ rated}$	Maximum air gap $S_{Gap\ max.}$	Minimum rotor thickness $h_{min.}$
		rpm	rpm	rpm	Nm	mm	Nm	mm	mm	mm
63	**BFK458-06**	3000	6000	6000	0.17	7	3.7	0.2	0.4	4.5
71	**BFK458-06**	3000	6000	6000	0.17	7	3.7	0.2	0.4	4.5
80	**BFK458-08**	3000	6000	6000	0.35	8.0	7.0	0.2	0.45	5.5
90	**BFK458-10**	3000	6000	6000	0.76	7.5	18.2	0.2	0.55	7.5
100	**BFK458-12**	3000	6000	6000	1.29	12.5	21.3	0.3	0.65	8.0
112	**BFK458-14**	3000	6000	6000	1.66	11.0	32.8	0.3	0.75	7.5
132	**BFK458-16**	3000	5300	5000	1.55	13.0	61.1	0.3	0.75	8.0
160	**BFK458-20**	1500	4400	3200	5.6	17.0	157.5	0.4	1.2	12.0
180	**BFK458-20**	1500	4400	3200	5.6	17.0	178.4	0.4	1.0	12.0
200, 225	**BFK458-25**	1500	3000	3000	6.15	21.0	248.7	0.5	1.5	15.5

© Innomotics 2024

Introduction

Overview

Changing the braking torque

The brake is supplied with the braking torque already set.
For BFK458 brakes, the torque can be reduced to dimension O_1 by unscrewing the adjusting ring with a hook wrench.
The braking torque changes by the values shown in the above table for each notch of the adjusting ring.

Readjusting the air gap

Under normal operating conditions, the brake is practically maintenance-free. The air gap S_{Gap} must only be checked at regular intervals if the application requires an extremely large amount of frictional energy and readjusted to the rated air gap $S_{Gap\ rated}$ at the latest when the maximum air gap $S_{Gap\ max}$ is reached.

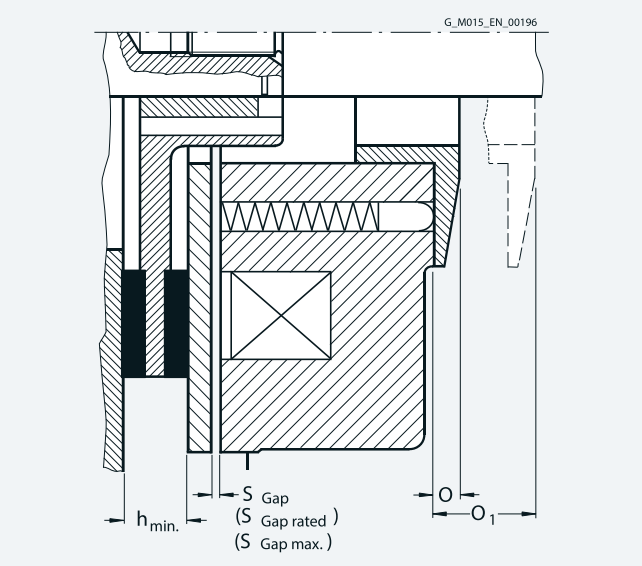

Connection

Labeled terminals are provided in the main terminal box of the motor to connect the brake.

The AC voltage for the brake excitation winding is connected to the two free terminals of the rectifier block (~).

The brake can be released when the motor is at a standstill by separately exciting the solenoid. In this case, an AC voltage must be connected at the rectifier block terminals. The brake remains released as long as this voltage is present.

The rectifiers are protected against overvoltages by varistors in the input and output circuits.

For 24 V DC brakes, the brake terminals are directly connected to the DC voltage source.

For this purpose, see the circuit diagrams on page 1/96.

Fast brake application

If the brake is disconnected from the line supply, the brake is applied. The application time for the brake disk is delayed as a result of the inductance of the solenoid (shutdown on the AC side). This results in a considerable delay before the brake is mechanically applied. In order to achieve short brake application times, the circuit must be interrupted on the DC side.
To realize this, the wire jumpers, located between contacts 1+ and 2+ at the rectifier, are removed and replaced by the contacts of an external switch.
For this purpose, see the circuit diagrams on page 1/96.

Mechanical manual brake release with lever

The brakes can be supplied with a mechanical manual release with lever.
Order code **F50**

The dimensions of the brake lever depend on the motor frame size and can be read from the dimensional drawing generator for motors in the SPC tool for low-voltage motors.

© Innomotics 2024

Overview

KFB spring-operated brake

KFB spring-operated brake

The KFB solenoid double-disk spring-operated brake is a safety brake that brakes the motor if the supply is disconnected (power failure, emergency stop). The KFB brake with IP67 degree of protection is mainly used for electric motors for traversing, cross-traversing and lifting gear in cranes as well as for special industrial applications.

Motor series

This brake is the standard brake for 1LE1 motors in frame sizes 250 to 315. For frame sizes 180 to 225, apart from the standard brake BFK458, KFB brakes can also be supplied. Special brake selections are available on request.

Design and mode of operation

When the brake current is switched on, an electromagnetic field develops which overcomes the spring force of the brake. The corresponding modules, including the motor shaft, can rotate freely. The brake is released. If the brake current is switched off or if there is a power failure, the electromagnetic field of the brake disappears. The mechanical braking energy is transferred to the motor shaft. The motor is braked.

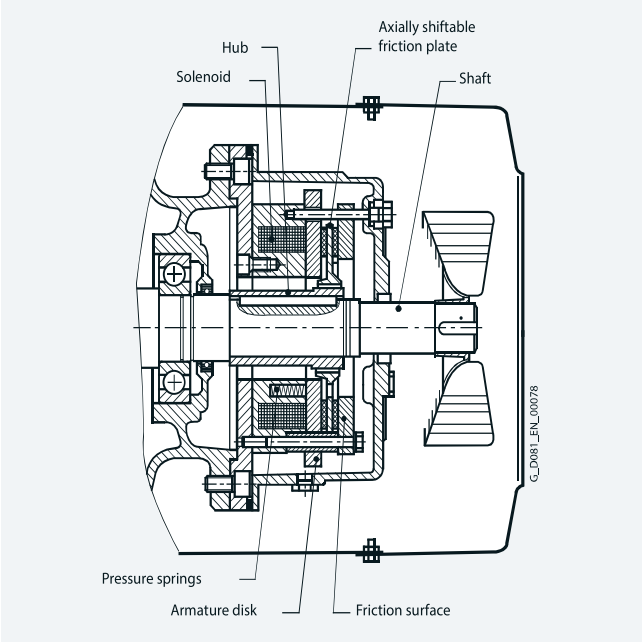

Design of KFB spring-operated brakes

Other characteristics of the KFB brake

- High degree of protection IP67.
- Corrosion-resistant in seawater and in the tropics.
- The brake is a dynamic brake, not simply a holding brake. For this reason there is less wear, especially in the case of emergency stops (commissioning).
- High wear reserves – repeated stepless air gap readjustment is possible. This results in extremely long operating times and low service and operating costs.
- The function and wear can be monitored with microswitches and proximity switches. Microswitch On/Off is standard for 1LE motors, frame size 250 to 315. Microswitch On/Off is not standard for 1LE motors, frame size up to 225. Anti-condensation heating is possible as an option.
- Fully functional brake for housing acceptance test. Visual inspection of brake is possible during operation.
- The brake (air gap) can be adjusted in the factory, for example, and mounted on the drive motor without further adjustments.
- The wearing parts can be replaced without great effort. After the housing has been opened (three screws), it is easy to replace the friction plate. It is not necessary to disassemble the entire brake.

© Innomotics 2024

1

Overview

Voltage and frequency

The solenoids and the brake rectifier can be connected to the following voltages: 1 AC 50 Hz 230 V ±10 %

When 60 Hz is used, the voltage for the brake must not be increased!

The brake can also be supplied for other voltages:

- Brake supply voltage: 24 V DC
  Order code **F10**
- Brake supply voltage: 230 V AC
  Order code **F11**
- Brake supply voltage: 400 V AC
  (directly at the terminal strip)
  Order code **F12**

Order codes **F10** and **F12** may only be used in conjunction with order code **F01**.

Fast brake application

Not available for the KFB brake.

Mechanical manual brake release with lever

The brake can be released manually with screws as standard. Mechanical manual release with a lever can be ordered with order code **F50**.

The dimensions of the brake lever depend on the motor frame size and can be read from the dimension sheet generator for motors in the SPC tool for low-voltage motors. Up-to-date data are available from the brake manufacturer.

© Innomotics 2024

Overview

Connection

Labeled terminals are provided in the main terminal box of the motor to connect the brake.
KFB brakes are connected through a standard bridge or half-wave rectifier.

A special circuit is not required. Optimal switching times are achieved without the need to use special circuits.

For this purpose, see the circuit diagrams on page 1/96.

Maximum admissible speeds

The maximum admissible speeds from which emergency stops can be made are listed in the next table. These speeds should be considered as guide values and must be checked for the specific operating conditions.

The maximum admissible friction energy depends on the switching frequency and is shown for the individual brakes in the following diagram. Increased wear can be expected when the brakes are used for emergency stops.

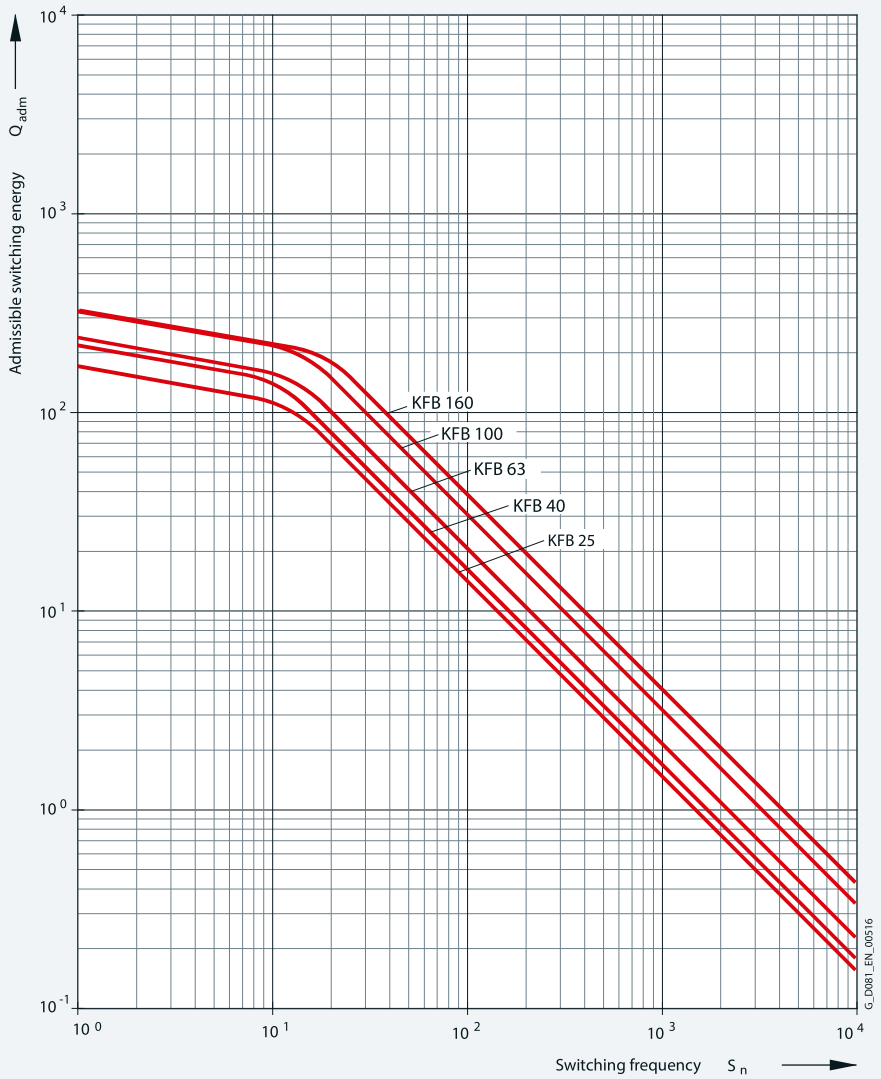

© Innomotics 2024

Introduction

Modular technology

Overview

Overview of brake selection for 1LE1 motors			For motor frame sizes					
			180 [1]	200 [1]	225 [1]	250 [2]	280 [2]	315 [2] [4]
No. of poles			2 to 8	2 to 8	2 to 8	2 to 8	4 to 8	4 to 8
Flanged end shield NDE brake installation			A300	A350	A350	A400	A450	A550
Max. diameter of 2nd shaft extension		mm	48_{k6}	55_{m6}	55_{m6}	60_{m6}	65_{m6}	70_{m6}
Brake type			**KFB 25**	**KFB 40**	**KFB 40**	**KFB 63**	**KFB 100**	**KFB 160**
Braking torque		Nm	225	360	360	567	900	1440
Nominal dynamic braking torque according to VDE 0580		Nm/rpm	250/127	400/117	400/117	630/92	1000/78	1600/69
Dynamic braking torque [3]	at 750 rpm	Nm	207	332	332	504	780	1248
	at 1000 rpm	Nm	200	316	316	491	760	1200
	at 1500 rpm	Nm	192	304	304	466	720	1136
	at 3000 rpm	Nm	175	276	276	378	580	880
	at n_{max}	Nm	137	220	220	346	500	800
Maximum speed n_{max} – IM B3/V1		rpm	6000	5500	5500	4700	4000	3600
Power at 110 V DC		W	158	196	196	220	307	344
Power at 230 V AC		W	160	188	188	206	316	340
Current at 110 V DC		A	1.44	1.78	1.78	2	2.79	3.13
Current at 230 V AC (207 V DC coil voltage)		A	0.77	0.91	0.91	1	1.53	1.64
Current at 400 V AC (180 V DC coil voltage)		A	0.8	1.18	1.18	1.25	1.8	2.1
Current at 24 V DC		A	5.21	6.92	6.92	8.17	12.2	12.8
Weight, approx.		kg	42	55	55	74	106	168
Application time t_1		ms	70	80	80	112	126	183
Release time t_2		ms	240	250	250	342	375	500
Brake moment of inertia		kgm^2	0.0048	0.0068	0.0068	0.0175	0.036	0.05
Lifetime L of the brake lining		$Nm \cdot 10^6$	3600	3110	3110	4615	7375	10945
Air gap adjustment L_N required after braking energy		$Nm \cdot 10^6$	810	935	935	1185	2330	3485

1) The standard brake for frame sizes 180 to 225 is the BFK458 brake. KFB brake on request.
2) The standard brake for frame sizes 250 to 315 is the KFB brake.
3) The dynamic braking torque also depends on the load data; temperatures in excess of the maximum admissible lining surface temperatures must be avoided.
4) 1LE5 standard power outputs 1LE5...-3A.0; 3A.4; 3A.5; 3AC6; 3AD6.

© Innomotics 2024

Overview

SFB-SH solenoid double-disk spring-operated brake

Motor series

This brake is the standard brake for 1LE5 motors in frame sizes 315 to 355.
Special brake selections are available on request.

SFB-SH solenoid double-disk spring-operated brake

SFB-SH solenoid double-disk spring-operated brakes are safety brakes that are mechanically operated on a power failure. This ensures that the brake still works during a power failure. These brakes are designed for dry running, must only ever be operated in a safe state, and only installed, commissioned, operated, and maintained by specially trained installation personnel. The brakes of the SFB-SH type series have an increased braking torque due to use of a different friction material and are used for emergency stops as a dynamically loaded brake with a safety margin.

Other characteristics of the SFB-SH brake

- High degree of protection IP67.
- Corrosion-resistant in seawater and in the tropics.
- High wear margins - simple air-gap adjustment. This results in extremely long operating times and low service and operating costs.
- The function and wear can be monitored with microswitches and proximity switches. Microswitch On/Off is standard for 1LE5 motors. Anti-condensation heating is possible as an option.
- Fully functional brake for housing acceptance test. Visual inspection of brake is possible during operation.
- The brake (air gap) can be adjusted in the factory, for example, and mounted on the drive motor without further adjustments.
- The wearing parts can be replaced without great effort. After the housing has been opened (three acorn nuts), it is easy to replace the friction plate. It is not necessary to disassemble the entire brake.

Design and mode of operation

When the brake current is switched on, an electromagnetic field develops which overcomes the spring force of the brake. The corresponding modules, including the motor shaft, can rotate freely. The brake is released. If the brake current is switched off or if there is a power failure, the electromagnetic field of the brake disappears. The mechanical braking energy is transferred to the motor shaft. The motor is braked.

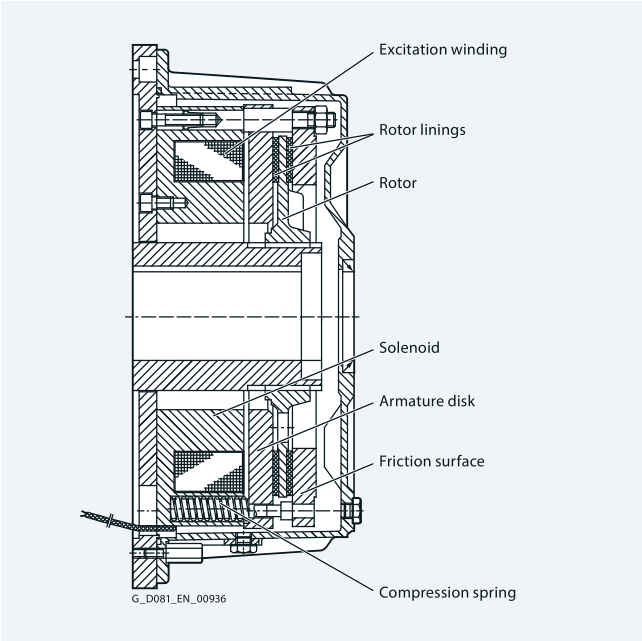

Design of the SFB-SH solenoid double-disk spring-operated brake

Voltage and frequency

The solenoids and the brake rectifier can be connected to the following voltages:
1 AC 50 Hz 230 V ±10 %

When 60 Hz is used, the voltage for the brake must not be increased!

The brake can also be supplied for other voltages:

- Brake supply voltage: 24 V DC
  Order code **F10**
- Brake supply voltage: 230 V AC
  Order code **F11**
- Brake supply voltage: 400 V AC
  (directly at the terminal strip)
  Order code **F12**

Order codes **F10** and **F12** may only be used in conjunction with order code **F01**.

© Innomotics 2024

Overview

Connection

Labeled terminals are provided in the main terminal box of the motor to connect the brake.

The AC voltage for the brake excitation winding is connected to the two free terminals of the rectifier block (~). The rectifier is located in the main terminal box and must be connected in the customer's switchboard.

The brake can be released when the motor is at a standstill by separately exciting the solenoid. In this case, an AC voltage must be connected at the rectifier block terminals. The brake remains released as long as this voltage is present.

For 24 V DC brakes, the brake terminals are directly connected to the DC voltage source.

For this purpose, see the circuit diagrams on page 1/96.

Maximum admissible speeds

The maximum admissible speeds from which emergency stops can be made are listed in the next table. These speeds should be considered as guide values and must be checked for the specific operating conditions.

The maximum admissible friction energy depends on the switching frequency and is shown for the individual brakes in the following diagram. Increased wear can be expected when the brakes are used for emergency stops.

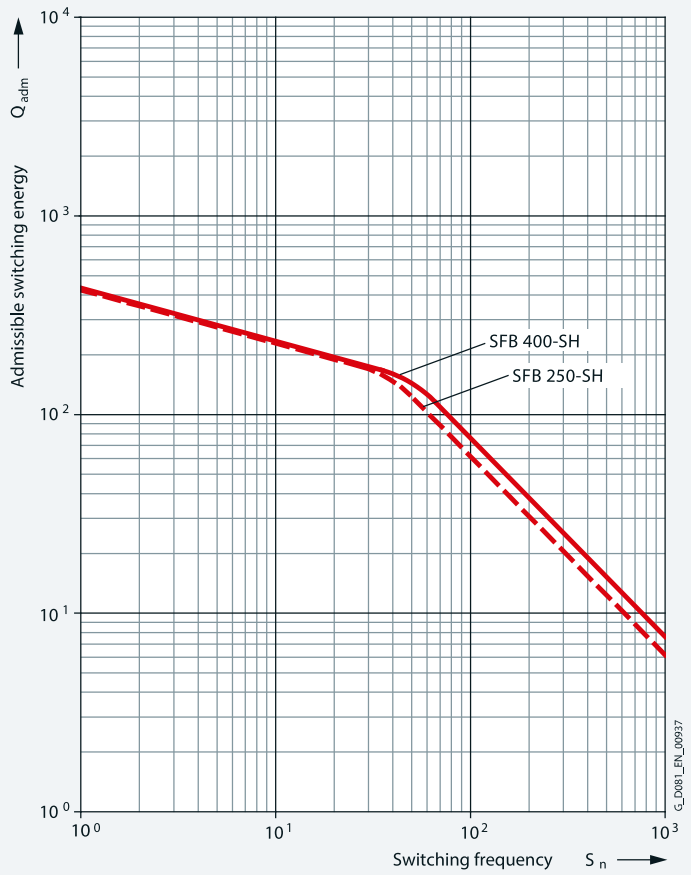

© Innomotics 2024

Overview

Overview of brake selection for 1LE5 motors			For motor frame sizes	
			315	355
No. of poles			4 to 8	4 to 8
Flanged end shield NDE brake installation			FF500 (A550) [1]	FF600 (A660) [2]
Max. diameter of 2nd shaft extension		mm	75_{m6}	90_{m6}
Brake type			**SFB 250-SH**	**SFB 400-SH**
Braking torque		Nm	2970	4680
Nominal dynamic braking torque according to VDE 0580		Nm/rpm	3300/54	5200/47
Dynamic braking torque [3]	at 750 rpm	Nm	2400	2100 [4]
	at 1000 rpm	Nm	2200	2300 [4]
	at 1500 rpm	Nm	1850	2100 [4]
	at n_{max}	Nm	1580	2100 [4]
Maximum speed n_{max} – IM B3/V1		rpm	2800	2500
Power at 110 V DC		W	495	553
Power at 230 V AC (207 V DC coil voltage)		W	511	–
Current at 110 V DC		A	4.5	5.03
Current at 230 V AC (207 V DC coil voltage)		A	2.79	3.14
Current at 400 V AC (180 V DC coil voltage)		A	2.98	3.36
Current at 24 V DC		A	19.93	–
Weight, approx.		kg	306	357
Application time t_1		ms	640	700
Release time t_2		ms	690	1100
Brake moment of inertia		kgm^2	0.14	0.325
Minimum air gap		mm	0.4	0.4
Maximum air gap		mm	2.5	2.5

1) External dimension increases to 560 mm.
2) External dimension decreases to 640 mm.
3) The dynamic braking torque also depends on the load data, temperatures in excess of the maximum admissible lining surface temperatures must be avoided.
4) Value is guaranteed by the brake manufacturer.
In practice, a higher braking torque can be expected.
Restrictions are determined at the test station of the brake manufacturer.
Information: www.pintschbubenzer.de

© Innomotics 2024

Overview

Configuration of motors with brakes

Braking time

1

The time it takes the motor to come to a standstill comprises two components:
a.) The application time of the brake t_2
b.) The braking time t_{Br}

$$t_{Br} = \frac{J \cdot n_{rated}}{9.55 \cdot (T_B \pm T_L)}$$

t_{Br} Braking time in s
J Total moment of inertia in kgm²
n_{rated} Rated speed of the motor with brake in rpm
T_B Rated braking torque in Nm
T_L Average load torque in Nm (If T_L supports the braking operation, T_L is positive)

Braking energy per braking operation Q_{adm}

The braking energy per braking operation in Nm comprises the energy of the moments of inertia to be braked Q_{Kin} and the energy Q, which must be applied in order to brake against a load torque:

$$Q_{adm} = Q_{Kin} + Q$$

a.) The energy of the moments of inertia in Nm

$$Q_{Kin} = \frac{J \cdot n^2_{rated}}{182.4}$$

n_{rated} Rated speed before braking in rpm
J Total moment of inertia in kgm². The mass moment of inertia J specified in the formula corresponds to the total moment of inertia of all braked masses referred to the motor/brake speed.

b.) Braking energy on emergency trip

The braking energy for occasional emergency trips must be checked to ensure that it does not cause the brake to overheat. Please refer to table "Technical specifications of brakes" for admissible values. The braking energy produced for traversing gear can be calculated approximately with the following equation:

$$Q = \frac{J_{tot} \cdot n^2_{Br}}{182.4 \cdot 10^3} \cdot \frac{T_{Br}}{T_{Br} \pm T_L}$$

Q Energy capability/braking energy in kJ
T_{Br} Braking torque in Nm
T_L Total of all load torques in Nm referred to the brake (motor) shaft
n_{Br} Speed of brake (motor) shaft in rpm
J_{tot} Total moment of inertia to be braked in kgm² reduced to the brake (motor) shaft
T_L is positive if it supports braking (e.g. hoisting a load)
T_L is negative if it counteracts braking (e.g. lowering a load)

The total moment of inertia J_{tot} is the sum of the individual moments of inertia of the system components to be braked, reduced to the brake (motor) shaft, and the moments of inertia of the linear-motion masses. The equivalent mass inertia J_{Eqv} of a linear-motion mass m with velocity v, referred to the brake (motor) speed n_{Br}, is calculated as follows:

$$J_{Eqv} = 91.2 \cdot m \cdot \left(\frac{v}{n_{Br}}\right)^2$$

m Mass of the linear-motion load in kg
v Velocity of the linear-motion load in m/s
n_{Br} Speed of brake (motor) shaft in rpm

The velocity and/or speed to be entered here must equal the maximum values in normal operation. An increase in velocity resulting from wind forces may also need to be taken into account.

Definition of switching times (VDI 2241)

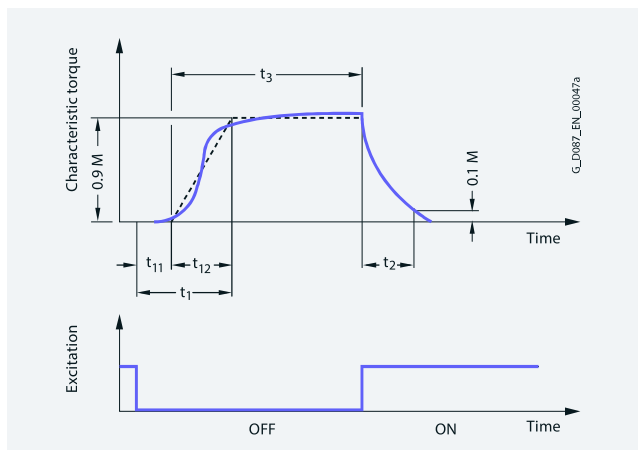

Brake switching times

Switching times:
t_1 Brake application time
t_2 Disconnection time
t_3 Slip time
t_{11} Response delay
t_{12} Rise time

© Innomotics 2024

Overview

Run-on revolutions U

The number of run-on revolutions U of the motor with brake can be calculated as follows:

$$U = \frac{n_{rated}}{60}\left(t_1 + \frac{t_{Br}}{2}\right)$$

t_1 Brake application time in ms

Lifetime of the brake lining L and readjustment of the air gap

The brake lining wears due to friction which increases the air gap and the release time for the brake at standard excitation.

In order to calculate the lifetime of the brake lining in terms of operations S_{max}, the lifetime of the brake lining L in Nm must be divided by the braking energy Q_{adm}:

$$S_{max} = \frac{L}{Q_{adm}}$$

The interval between adjustments N can be calculated in terms of operations by dividing the braking energy L_N that the brake can output until it is necessary to readjust the working air gap by Q_{adm}:

$$N = \frac{L_N}{Q_{adm}}$$

© Innomotics 2024

Overview

FDW/FDX spring-operated brake

Motor series

1

This FDW/FDX brake is provided for 1LE1 motors (FDW for frame size 100 to 200; FDX for frame size 225 to 315; 100 to 200 on request).

Mode of operation of FDW/FDX spring-operated brake (holding brake/operating brake)

The solenoid spring-operated brakes (order code **F04**), FDW with IP66 and FDX with IP67 degree of protection, are quiescent current brakes, meaning that the braking torque is produced by spring force and increased by magnetic force in normal operation.

During the braking operation, the built-in compression springs apply pressure to the rotor that interlocks radially with the machine shaft using the axially moving armature disk. In turn, this applies pressure to the opposing side against the friction surface (→ motor label). The braking torque is produced from the linings of the rotor and the armature disk/friction surface being in contact.

During the brake release process, a magnetic force is produced by applying a direct current via the excitation winding in the solenoid. The armature disk is thereby pulled from the solenoid and the rotor is released.

During the manual brake release process (only available for the brake version with manual brake release), the armature disk is pressed mechanically against the solenoid by operating the manual release lever. The brake can therefore still be released in the event of a power failure, for example.

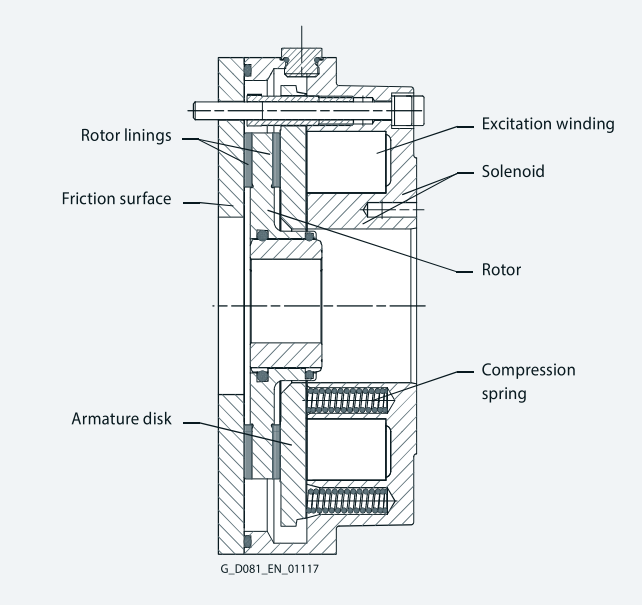

Design of spring-operated brake FDW

Voltage and frequency

The solenoids and the brake rectifier are designed for connection to the following voltages or can be supplied for the following voltages:

- Brake supply voltage 230 V AC — Order code **F11**
- Brake supply voltage 400 V AC — Order code **F12**
- Brake supply voltage 180 V DC — Order code **F17**
- Brake supply voltage 205 V DC — Order code **F18**

When 60 Hz is used, the voltage for the brake must not be increased!

Order codes **F11**, **F12**, **F17** and **F18** may only be used in conjunction with order code **F04**.

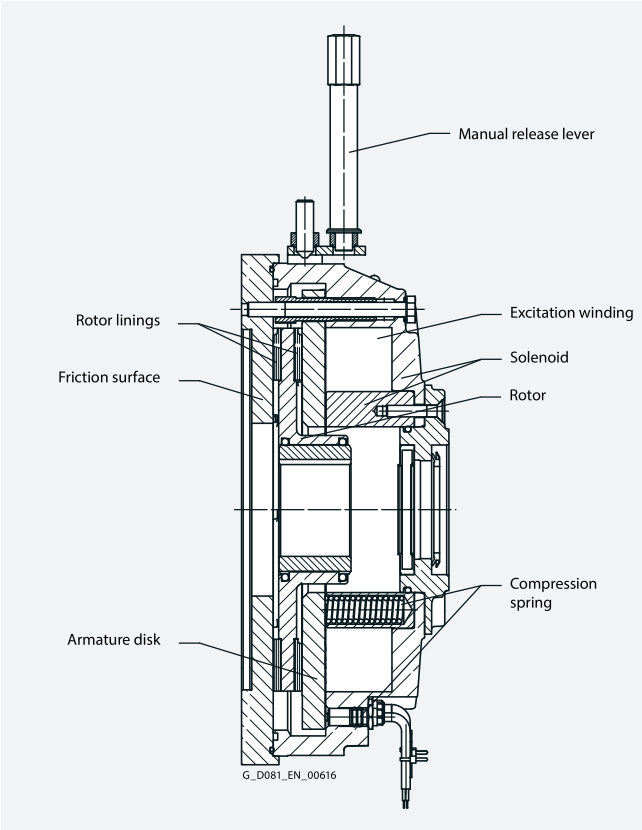

Design of spring-operated brake FDX

© Innomotics 2024

Overview

Connection

Labeled terminals are provided in the main terminal box of the motor to connect the brake.

The AC voltage for the brake excitation winding is connected to the two free terminals of the rectifier block (~).

The brake can be released when the motor is at a standstill by separately exciting the solenoid. In this case, an AC voltage must be connected at the rectifier block terminals. The brake remains released as long as this voltage is present.

The rectifiers are protected against overvoltages by varistors in the input and output circuits. The function and wear can be monitored with microswitches and proximity switches. Microswitch On/Off is standard for 1LE1 motors (only possible for FDW spring-operated brake). Anti-condensation heating is possible as an option.

Mechanical manual brake release with lever

The brake can be supplied with a mechanical manual release with lever.
Order code **F50**

The dimensions of the brake lever depend on the motor frame size and can be read from the dimensional drawing generator for motors in the SPC tool for
low-voltage motors.

configurator.innomotics.com

Ambient temperature and operating mode of brake (only for FDW spring-operated brake):

_ - 20°C ≥ 40°C	no action required
_ - 20°C ≥ 60°C	S3/60% or power reduction with fast excitation rectifier
_ - 20°C ≥ 80°C	S3/60% and power reduction with fast excitation rectifier
_ under - 20°C	heating necessary

Accesories

_ microswitches
_ heating
_ paint finish up to C3
_ special fast response rectifier is needed (due to higher temperatures)

Lifetime

The amount of frictional energy that can be transferred before the rotor must be replaced depends on various factors:

_ Mass to be decelerated
_ Switching frequency
_ Speed
_ Resulting temperature on the friction surfaces

As a result, only guide values can be specified for the frictional energy to be transferred until rotor replacement.

Abbreviations and definitions used (with their units):

T_{LR}	= Motor starting torque (Nm)
T_b	= Braking torque (Nm)
T_{breq}	= Required braking torque (Nm)
$T_{b,\,rated}$	= Rated torque of the spring-operated brake (Nm)
T_L	= Load torque (Nm)
T_{tot}	= Total torque (Nm)
F	= Force (N)
r	= Lever arm (m)
n	= Speed (rpm)
K	= Safety factor $K \geq 2$
P	= Power (kW)
t	= Overall braking time (ms)
t_{st}	= Startup time (s)
t_B	= Braking time (s)
t_2	= Disconnection time (ms)
t_1	= Application time (ms)
t_{11}	= Response delay (ms)
P_R	= Frictional power (J/s)
W_R	= Friction energy (J)
S	= Switching cycles (brake operations) per second (Hz)
J_E	= Internal moment of inertia (kgm^2)
J_{add}	= Additional moment of inertia (kgm^2)
$J_{2,3..}$	= Moment of inertia (kgm^2)
J_{tot}	= Total moment of inertia (kgm^2)
n_1	= Motor speed (rpm)
$n_{2,3..}$	= Speeds (rpm)

Multiple moments of inertia with different speeds are converted into a moment of inertia relative to the motor shaft:

$$J_{add} = \frac{J_2 \cdot n_2^2 + J_3 \cdot n_3^2 \cdots}{n_1^2} \quad (\text{kgm}^2)$$

Torque

A spring-operated brake is designed mainly in accordance with the required braking torque T_{breq}. If the moment of inertia, speed, and admissible braking time of the machine are known, the braking torque of the spring-operated brake can be calculated. If the masses that are to be decelerated by the spring-operated brake are running at a different speed from the shaft decelerated by the spring-operated brake, the moment of inertia of these masses (J_{add}) must be calculated relative to this shaft (see above). In addition, the moment of inertia of the rotor-hub system (J_E) must be taken into account.

© Innomotics 2024

Introduction

Overview

Load torque (static loading)

Torque which is present when the system is at a standstill and must be held by the brake. The loading force is converted into the load torque via the relevant lever arm:

$T_L = F \cdot r$ (Nm)

Braking torque (dynamic loading)

A purely dynamic load is present when flywheels, rollers, etc., are to be delayed and the static load torque is negligibly small.

The required braking torque is calculated as follows:

$$T_b = 1.046 \cdot 10^2 \cdot J_{tot} \cdot \frac{n}{t - t_1} \text{ (Nm)}$$

$$T_{breq} = T_b \cdot K \leq T_{b,\,rated} \text{ (Nm)}$$

Dynamic and static loading

Most applications involve dynamic loading as well as static load torque:

$$T_{breq} = (T_b \pm T_L) \cdot K \text{ (Nm)}$$
$$T_{breq} = (1.046 \cdot 10^2 \cdot J_{tot} \cdot \frac{n}{t - t_1} \pm T_L) \cdot K \text{ (Nm)}$$
$$T_{breq} \leq T_{b,\,rated} \text{(Nm)}$$

Sign for T_L:

+ T_L = Load torque is applying force (in the direction of motion)

– T_L = Load torque is applying a decelerating force (opposite to the direction of motion)

If both cases occur, the specific configuration is always adapted to the larger torque.

Approximate determination of T_{breq}

If the moment of inertia is not known and if the input power has been defined, the required braking torque is determined as follows:

$$T_{breq} = 9.55 \cdot 10^3 \cdot \frac{P}{n} \cdot K \leq T_{b,\,rated} \text{ (Nm)}$$

$K \geq 2$

© Innomotics 2024

Overview

Braking time

General information

$$t = 1.046 \cdot 10^2 \cdot J_{tot} \cdot \frac{n}{T_{b,\,rated} \pm T_L} + t_1 \quad \text{(ms)}$$

Sign for T_L:

– T_L = Load torque is applying force (in the direction of motion)

+ T_L = Load torque is applying a decelerating force (opposite to the direction of motion)

Calculation of the starting and braking time for motors

Startup time for motors with brakes

$$t_{st} = J_{tot} \cdot \frac{n_1}{9.55 \cdot (T_{LR} \pm T_L)} + \frac{t_2}{1000} \quad \text{(s)}$$

$J_{tot} = J_E + J_{add}$ (kgm²)

Sign for T_L:

+ T_L = Load torque is applying force (in the direction of motion)

– T_L = Load torque is applying a decelerating force (opposite to the direction of motion)

Braking time for motors with brakes

$$t_B = J_{tot} \cdot \frac{n_1}{9.55 \cdot (T_{b,\,rated} \pm T_L)} + \frac{t_1}{1000} \quad \text{(s)}$$

Sign for T_L:

– T_L = Load torque is applying force (in the direction of motion)

+ T_L = Load torque is applying a decelerating force (opposite to the direction of motion)

Thermal load

When braking, friction energy is applied during the slip phase, which releases thermal energy.

Friction energy per braking operation

$$W_R = J_{tot} \cdot n^2 \cdot \frac{T_{b,\,rated}}{182.5 \cdot (T_{b,\,rated} \pm T_L)} \quad \text{(J)}$$

Sign for T_L:

– T_L = Load torque is applying force (in the direction of motion)

+ T_L = Load torque is applying a decelerating force (opposite to the direction of motion)

The friction energy per braking operation must be no greater than the admissible value W_{Rmax}

$W_R \leq W_{Rmax}$ (J)

Frictional power

$P_R = W_R \cdot S$ (J/s)

The friction energy must be no greater than the admissible value P_{Rmax}

$P_R \leq P_{Rmax}$ (J/s)

Connection

Load rating of the rectifier diodes as a function of the ambient temperature:

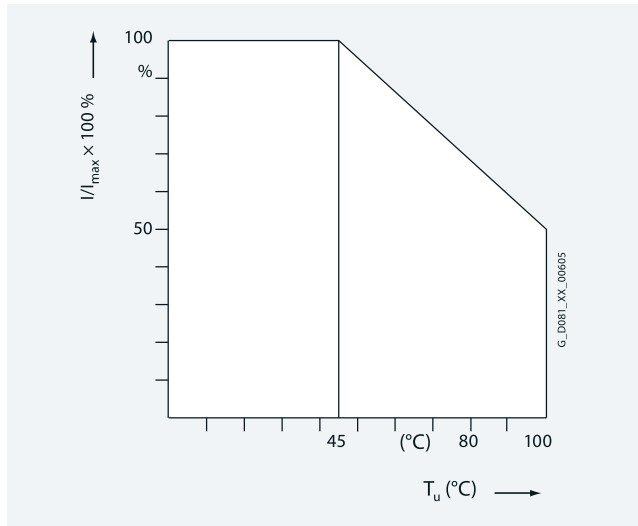

Block diagram:

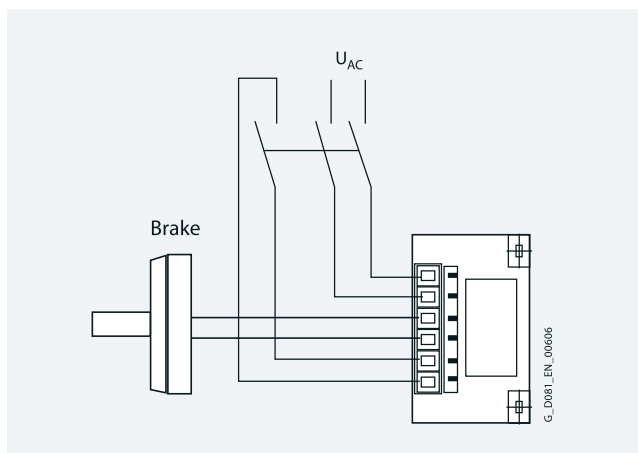

The high-speed rectifier performs the following functions:

- The coil is first supplied with a voltage $U_2 = 0.9 \times U_1$: Over-excitation of the brake
- After excitation time t_1 the voltage is reduced to $U_3 = 0.45 \times U_1$: Non-release voltage of the brake

Designation	Supply voltage (V AC)	Output voltage (V DC)		Ambient temperature
Article No.:	U_1 at 50/60 Hz	U_2	U_3	°C
PMG 480	215 … 500	$0.9 \times U_1$	$0.45 \times U_1$	–15 … +80

© Innomotics 2024

Introduction

Modular technology

1

Overview

Maximum admissible speeds

The maximum admissible speeds from which emergency stops can be made are listed in the next table. These speeds should be considered as guide values and must be checked for the specific operating conditions.

The maximum admissible friction energy depends on the switching frequency and is shown for the individual brakes in the following diagram. Increased wear can be expected when the brakes are used for emergency stops.

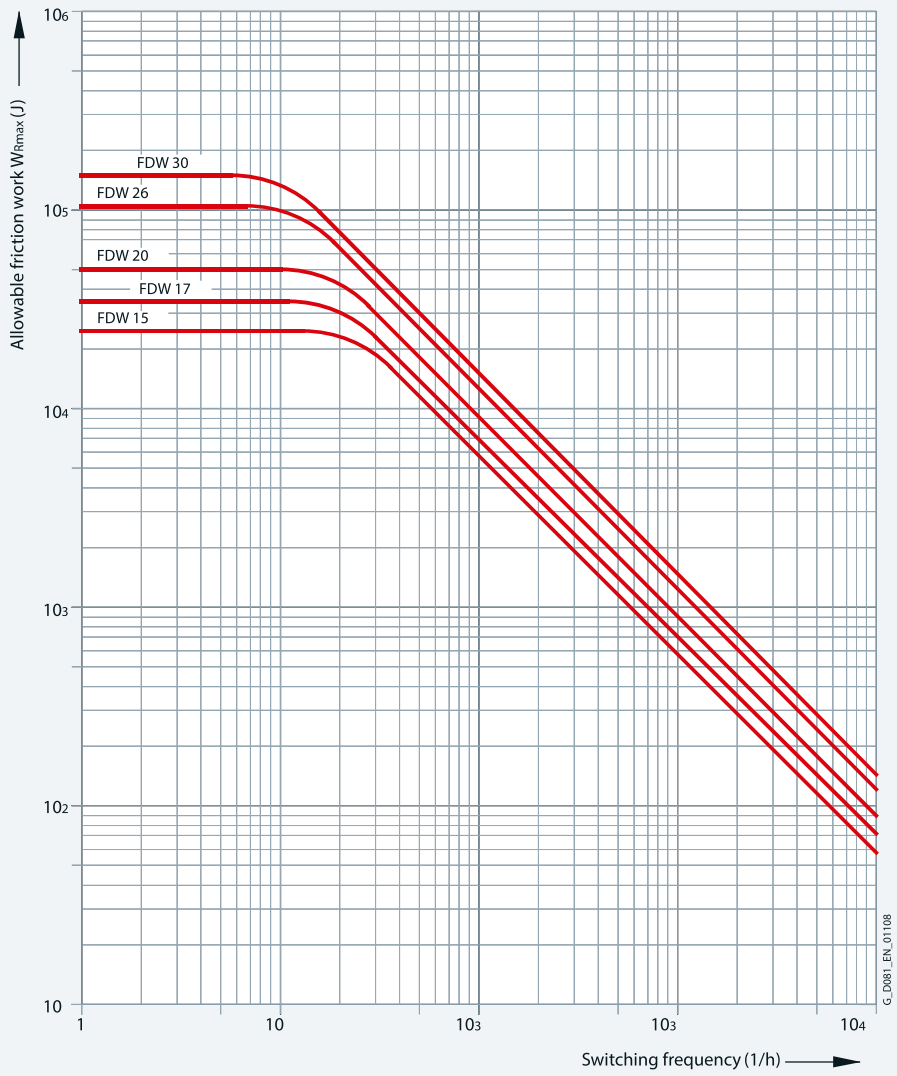

Spring-operated brake FDW

© Innomotics 2024

Overview

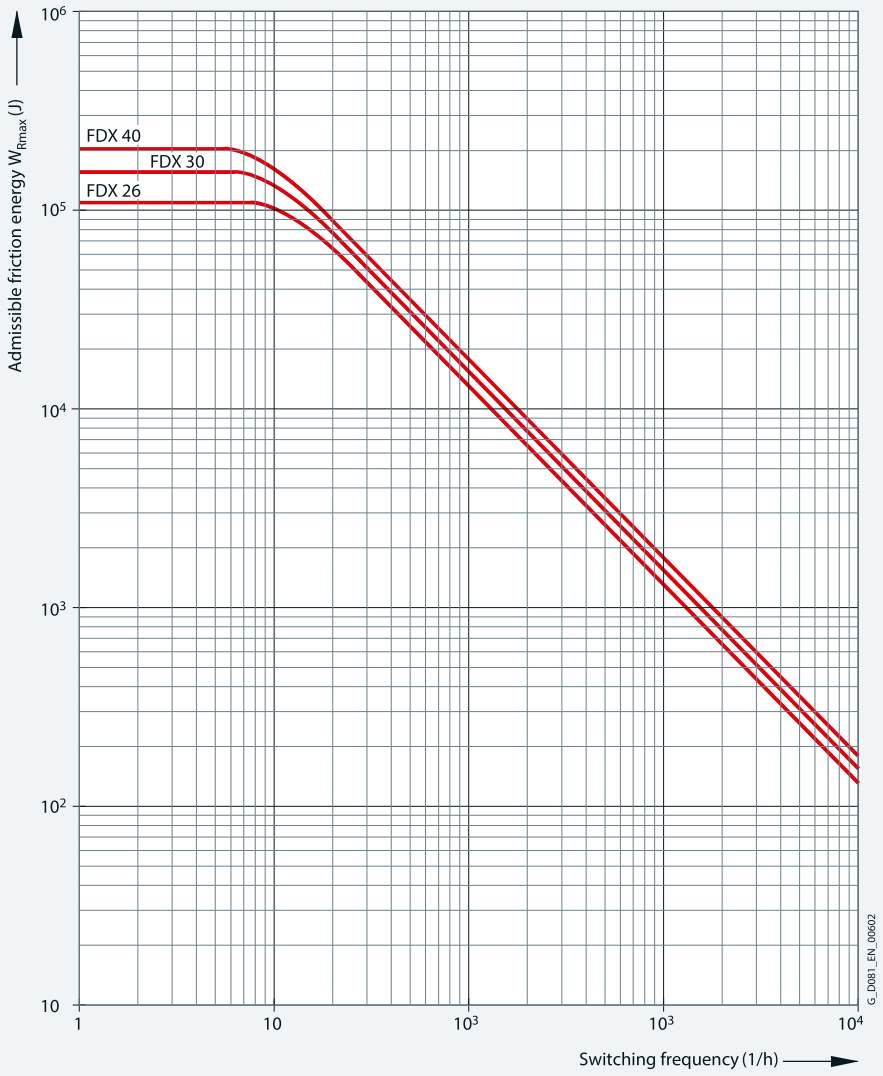

Spring-operated brake FDX

© Innomotics 2024

Overview

Overview of brake selection for 1LE1 motors (order code F04)			For motor frame sizes					
			100	112	132	160	180	200
No. of poles			2 to 8	2 to 8	2 to 8	2 to 8	2 to 8	2 to 8
Max. diameter for the second shaft extensions		mm	25	25	35	45	48	55
Brake type			**FDW 15**	**FDW 17**	**FDW 20**	**FDW 26**	**FDW 26**	**FDW 30**
Static braking torque		Nm	36 (26/21/15) [1]	54 (39/31/23) [1]	90 (64/51/38) [1]	225 (169/112) [1]	225 (169/112) [1]	360 (270/180) [1]
Dynamic rated braking torque acc. to DIN VDE 0580		Nm/rpm	40 (28/23/17) [1] / 194	60 (43/ 34/26) [1] / 181	100 (70/ 57/42) [1] / 149	250 (187/125) [1] / 108	250 (187/125) [1] / 108	400 (300/200) [1] / 88
	at 750 rpm	Nm	38	58	95	240	240	380
	at 1000 rpm	Nm	37	55	90	230	230	370
	at 1500 rpm	Nm	37	55	90	230	230	370
	at 3000 rpm	Nm	30	45	75	190	190	300
Admissible speed n_{max}		rpm	6000	6000	6000	3000	3000	3000
Rated current at 205 V DC coil voltage		A	0,28	0,44	0,59	0,68	0,68	0,89
Rated current at 180 V DC coil voltage		A	0,33	0,46	0,59	0,78	0,78	1,16
Rated current at 103 V DC coil voltage		A	0,55	0,82	1,05	1,4	1,4	1,77
Rated current at 24 V DC coil voltage		A	2,67	3,69	4,3	5,7	5,7	7,27
Weight, approx.		kg	6,7	9,2	13,6	30,3	30,3	44,9
Closing time t_1 (switching on the DC side)		ms	70	82	115	178	178	195
Release time t_2 (switching on the DC side)		ms	100	120	150	300	300	400
Brake moment of inertia		kg m²	0,00045	0,00086	0,00122	0,00665	0,00665	0,0195
Lifetime L of brake lining		Nm · 10⁶	350	500	850	1400	1400	1850

Overview of brake selection for 1LE1 and 1LE5 [5] motors (order code F04)			For motor frame sizes			
			225	250	280	315
No. of poles			2 to 8	2 to 8	2 to 8	2 to 8
Flange bearing plate for brake mounting on the NDE side			A350	A400	A450	A535
Max. diameter for the second shaft extensions		mm	55m6	48m6	65m6	48m6
Brake type			**FDX 30**	**FDX 30**	**FDX 40**	**FDX 40**
Static braking torque		Nm	450	567	900	1440[2]
Dynamic rated braking torque acc. to DIN VDE 0580		Nm/rpm	500/88	630/88	1000/65	1600[2]/65
	at 750 rpm	Nm	480	600	800	1200[2]
	at 1000 rpm	Nm	460	580	740	1150[2]
	at 1500 rpm	Nm	460	580	740	1150[2]
	at 3000 rpm	Nm	380	480	600	860[2]
Admissible speed n_{max}		rpm	3000[3]/6000[4]	3000[3]/6000[4]	3000[3]/6000[4]	3000[3]/6000[4]
Power at 180 V DC		W	880/220	880/220	1080/270	1080/270
Power at 103 V DC		W	560/140	560/140	560/140	560/140
Rated current at 230 V AC (103 V DC coil voltage)		A	2.72/1.36	2.72/1.36	2.76/1.38	2.76/1.38
Rated current at 400 V AC (180 V DC coil voltage)		A	2.44/1.22	2.44/1.22	3/1.5	3/1.5
Weight, approx.		kg	45	45	80	80
Closing time t_1 (switching on the DC side)		ms	60	60	160	160
Release time t_2 (switching on the DC side)		ms	140	140	320	320
Brake moment of inertia		kgm²	0.0195	0.0195	0.0445	0.0445
Lifetime L of brake lining		Nm · 10⁶	3700	3700	4900	4900

1) Reduced brake torque by decreasing the number of springs
2) Limit: ON time S3 -50 %
3) Operating brake
4) Holding brake
5) 1LE5 standard power outputs 1LE5...-3A.0; 3A.4; 3A.5; 3AC6; 3AD6.

© Innomotics 2024

Overview

"Special technology" comprises rotary pulse encoders of 1LE1 motors (with the exception of 1LE1 with order code **F90** – version "Forced-air cooled motors without external fan and fan cover" and 1PC1).
1LE1 motors with order codes **F70** (mounting of separately driven fan), **F01** (mounting of holding brake (standard arrangement)) and **F01 + F70** (mounting of brake and separately driven fan) from the modular mounting concept can be combined with rotary pulse encoders LL 861 900 220, HOG 86E TP DN 1024, HOG 9 DN 1024 I and HOG 10 D 1024 I from the "Special technology" range.
The length of the motor increases by ΔI when the rotary pulse encoder is mounted. For an explanation of the additional dimensions and weights, please refer to "Mounting technology", "Dimensions and weights" from page 1/129.

The rotary pulse encoders of "Modular technology" and "Special technology" are fitted as standard with a protective cover made of non-corrosive sheet steel.

For mounting of rotary pulse encoders with order codes **G11** and **G12** for frame sizes 71 to 315 and with order codes **G03, G04**, **G05**, and **G06** up to frame size 160, a protective cover (order code **G43**) is supplied as standard.

For frame size 180 and above, a protective cover is not supplied as standard when rotary pulse encoders are mounted for order codes **G03, G04**, **G05**, **G06**, **G07** and **G08**.

For mounting of rotary pulse encoders with order codes **G11**, **G12** + **F70** (mounting of separately driven fan): The cable end is connected to a connector that is located outside the fan cover. The fan cover does not have to be removed to connect the rotary pulse encoder. The rotary pulse encoder can be connected to the main terminal box or an auxiliary terminal box where necessary.

For mounting of rotary pulse encoders with order codes **G03, G04**, **G05**, **G06** + **F70** (mounting of separately driven fan):

- Up to frame size 200, the fan cover has to be removed to connect the rotary pulse encoder. The rotary pulse encoder can also be connected to the main terminal box or an auxiliary terminal box where necessary.
- As of frame size 225, the fan cover does not have to be removed to connect the rotary pulse encoder. The rotary pulse encoder can be connected to the main terminal box and can be connected to the auxiliary terminal box where necessary.

© Innomotics 2024

Introduction

Overview

LL 861 900 220 rotary pulse encoder

With its rugged construction, this rotary pulse encoder is also suitable for difficult operating environments. It is resistant to shock and vibration and has insulated bearings.

The LL 861 900 220 rotary pulse encoder can be supplied already mounted.
Order code **G04**

The LL 861 900 220 rotary pulse encoder can be retrofitted. The motor must be prepared for this. When the motor is ordered, the option "Prepared for mountings, center hole only", order code ***G40****, or the option "Prepared for mountings with shaft* D16 *", order code* ***G42****, must be specified (see "Mechanical version and degrees of protection" on page 1/94). The rotary pulse encoder is not part of the scope of supply in this case.*

The version of the rotary pulse encoder with a diagnostics system (ADS) can be supplied by Leine and Linde.

Manufacturer:
Leine und Linde AG
Olivehällsvägen 8
SE-64542 Strängnäs
Phone +46 152 265 00
Fax +46 152 265 05

www.leinelinde.com
Email: info@leinelinde.de

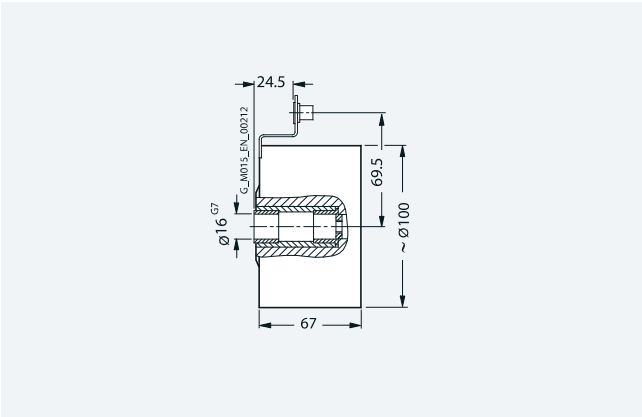

Mounting dimensions of LL 861 900 220 rotary pulse encoder

Technical specifications for LL 861 900 220 (HTL version)

Mounting of encoder for temperatures below −20 °C and higher than +40 °C available on request.

Supply voltage U_B	**+9 V to +30 V**
Current input without load	max. 80 mA
Admissible load current per output	40 mA
Pulses per revolution	1024
Outputs	6 short-circuit proof square-wave pulses A, A', B, B', 0, 0'
Pulse offset between the two outputs	90° ±25° el.
Output amplitude	U_{High} > 20 V U_{Low} < 2.5 V
Mark space ratio	1:1 ±10 %
Edge steepness	50 V/µs (without load)
Maximum frequency	100 kHz for 350 m cable
Maximum speed	4000 rpm
Temperature range	−20 to +80 °C
Degree of protection	IP65
Maximum adm. radial cantilever force	300 N
Maximum adm. axial force	100 N
Connection system	Terminal strips in encoder cable connection M20 × 1.5 radial
Weight	approx. 1.3 kg

© Innomotics 2024

Overview

HOG 9 DN 1024 I rotary pulse encoder

The encoder is fitted with insulated bearings.

The HOG 9 DN 1024 I rotary pulse encoder can be supplied already mounted.
Order code **G05**

The HOG 9 DN 1024 I rotary pulse encoder can be retrofitted. The motor must be prepared for this. When the motor is ordered, the option "Prepared for mountings, center hole only", order code ***G40,*** *or the option "Prepared for mountings with shaft D16", order code* ***G42,*** *must be specified (see "Mechanical version and degrees of protection" on page 1/94). The rotary pulse encoder is not part of the scope of supply in this case.*

Manufacturer:
Baumer Hübner GmbH
Max-Dohrn-Str. 2+4
10589 Berlin, Germany
Phone +49 (30) 69003-0
Fax +49 (30) 69003-104

www.baumer.com
Email: sales@baumerhuebner.com

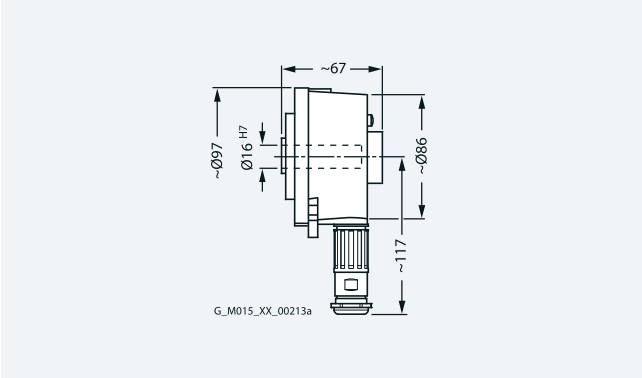

Mounting dimensions of HOG 9 DN 1024 I rotary pulse encoder

Technical specifications for HOG 9 DN 1024 I (HTL version)

Mounting of encoder for temperatures below –20 °C and higher than +40 °C available on request.

Supply voltage U_B	**+9 V to +30 V**
Current input without load	50 to 100 mA
Admissible load current per output	150 mA, 800 mA peak
Pulses per revolution	1024
Outputs	6 short-circuit-proof square-wave pulses A+, A-, B+, B-, R+, R-
Pulse offset between the two outputs	90° ±20 %
Output amplitude	$U_{High} \geq U_B - 3.5$ V $U_{Low} \leq 1.5$ V
Mark space ratio	1:1 ±20 %
Edge steepness	10 V/µs
Maximum frequency	120 kHz
Maximum speed	7000 rpm
Temperature range	–30 to +100 °C
Degree of protection	IP56
Maximum adm. radial cantilever force	500 N
Maximum adm. axial force	400 N
Connection system	M23 flange socket, radial (mating connector is part of the scope of supply)
Mech. version acc. to Baumer Hübner Ident. No.	73 522 B
Weight	approx. 0.9 kg

© Innomotics 2024

Introduction

Overview

HOG 86E TP6 DN 1024 I rotary pulse encoder

The HOG 86E TP6 DN 1024 I rotary pulse encoder can be supplied already mounted.
Order code **G03**

The HOG 86E TP6 DN 1024 I *rotary pulse encoder can be retrofitted. The motor must be prepared for this. When the motor is ordered, the option "Prepared for mountings, center hole only", order code* **G40,** *or the option "Prepared for mountings with shaft D16", order code* **G42,** *must be specified (see "Mechanical version and degrees of protection" on page 1/94). The rotary pulse encoder is not part of the scope of supply in this case.*

Manufacturer:
Baumer Hübner GmbH
Max-Dohrn-Str. 2+4
10589 Berlin, Germany
Phone +49 (30) 69003-0
Fax +49 (30) 69003-104

www.baumer.com
Email: sales@baumerhuebner.com

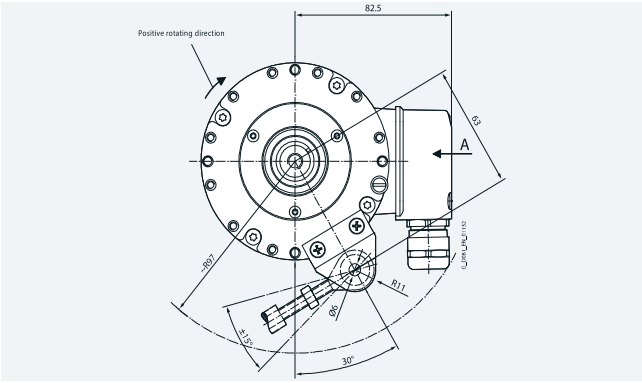

Mounting dimensions of HOG 9 DN 1024 I rotary pulse encoder

Technical specifications for HOG 86E TP6 DN 1024 I

Supply voltage U_B	**+9 V to +30 V**
Current input without load	≤100 mA
Pulses per revolution	1024
Outputs	6 short-circuit-proof square-wave pulses A+, A-, B+, B-, R+, R-
Pulse offset between the two outputs	90° ±20 %
Maximum frequency	≤170 kHz
Maximum speed	10000 rpm
Temperature range	−40 bis +100 °C
Degree of protection	IP66
Maximum adm. radial cantilever force	≤450 N
Maximum adm. axial force	≤350 N
Connection system	Terminal box with cable gland M16
Weight	approx. 1.3 kg

© Innomotics 2024

Overview

POG 9 rotary pulse encoder

The POG 9 rotary pulse encoder can be supplied already mounted.
Order code **G08**

The POG 9 rotary pulse encoder can be retrofitted. The motor must be prepared for this. When the motor is ordered, the option "Prepared for mountings, center hole only", order code **G40,** *or the option "Prepared for mountings with shaft* **D16** *", order code* **G42,** *must be specified (see "Mechanical version and degrees of protection" on page 1/94). The rotary pulse encoder is not part of the scope of supply in this case.*

Manufacturer:
Baumer Hübner GmbH
Max-Dohrn-Str. 2+4
10589 Berlin, Germany
Phone +49 (30) 69003-0
Fax +49 (30) 69003-104

www.baumer.com
Email: sales@baumerhuebner.com

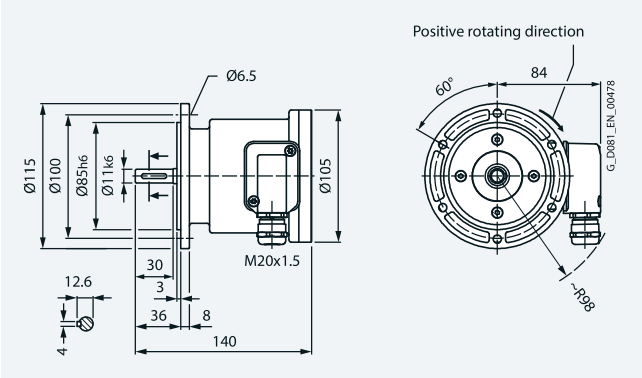

Mounting dimensions of POG 9 rotary pulse encoder

Technical specifications for POG 9

Mounting of encoder for temperatures below −20 °C and higher than +40 °C available on request.

Supply voltage U_B	**+9 V to +30 V**	**+5 V ±5 %**
Current input without load	< 100 mA	
Admissible load current per output	60 mA average 300 mA peak	25 mA average 75 mA peak
Pulses per revolution	300 ... 2500	
Output amplitude	$U_{High} \geq U_B - 3.5$ V $U_{Low} \leq 1.5$ V	$U_{High} \geq 2.5$ V $U_{Low} \leq 0.5$ V
Mark space ratio	1:1 ±20 %	
Operating speed	≤ 12000 rpm	
Switching rate	120 kHz	
Temperature range	−30 to +100 °C	
Degree of protection	IP56	
Maximum adm. radial cantilever force	150 N	
Maximum adm. axial force	80 N	
Connection system	Terminal box	
Weight	approx. 1.4 kg	

© Innomotics 2024

Introduction

Overview

POG 10 DN 1024 I rotary pulse encoder

The POG 10 DN 1024 I rotary pulse encoder can be supplied already mounted.
Order code **G07**

The POG 10 DN 1024 I rotary pulse encoder can be retrofitted. The motor must be prepared for this. When the motor is ordered, the option "Prepared for mountings, center hole only", order code **G40,** *or the option "Prepared for mountings with shaft D16", order code* **G42,** *must be specified (see "Mechanical version and degrees of protection" on page 1/94). The rotary pulse encoder is not part of the scope of supply in this case.*

Manufacturer:
Baumer Hübner GmbH
Max-Dohrn-Str. 2+4
10589 Berlin, Germany
Phone +49 (30) 69003-0
Fax +49 (30) 69003-104

www.baumer.com
Email: sales@baumerhuebner.com

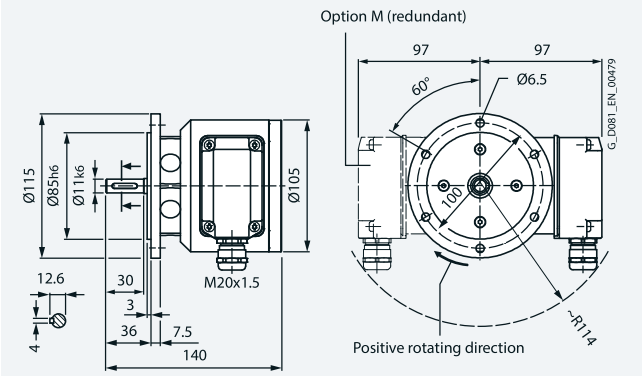

Mounting dimensions of POG 10 DN 1024 I rotary pulse encoder

Technical specifications for POG 10 DN 1024 I

Mounting of encoder for temperatures below –20 °C and higher than +40 °C available on request.

Supply voltage U_B	**+9 V to +30 V**	
Current input without load	< 100 mA	
Admissible load current per output	60 mA average 300 mA peak	25 mA average 75 mA peak
Pulses per revolution	300 ... 2500	
Mark space ratio	40:60 ... 60:40	
Operating speed	≤ 12000 rpm	
Switching rate	120 kHz	
Temperature range	–40 to +100 °C	
Degree of protection	IP66	
Maximum adm. radial cantilever force	≤ 450 N	
Maximum adm. axial force	≤ 300 N	
Connection system	Terminal box	
Weight	approx. 1.9 kg	

© Innomotics 2024

Overview

HOG 10 D 1024 I rotary pulse encoder

This encoder is extremely rugged and is therefore suitable for difficult operating conditions. It is fitted with insulated bearings.

The HOG 10 D 1024 I rotary pulse encoder can be supplied already mounted.
Order code **G06**

The HOG 10 D 1024 I rotary pulse encoder can be retrofitted. The motor must be prepared for this. When the motor is ordered, the option "Prepared for mountings, center hole only", order code ***G40,*** *or the option "Prepared for mountings with shaft D16", order code* ***G42,*** *must be specified (see "Mechanical version and degrees of protection" on page 1/94). The rotary pulse encoder is not part of the scope of supply in this case. The letters FSL and ESL stand for the following terms:*
FSL: (mechanical) centrifugal switch
ESL: electronic speed switch
Both switch types are suitable for tripping the motor when a critical limit speed is reached, or for accelerating the motor along a control ramp into the permissible speed range again, or for shutting down the motor completely (depending on the customer application).
The electronic speed switch is particularly suitable for converter operation.
The critical limit rotational speed to be monitored for the customer's application must be specified in the order. Further settings might also be necessary. These settings will be made at the Baumer & Hübner factory according to customer specifications.

Manufacturer:
Baumer Hübner GmbH
Max-Dohrn-Str. 2+4
10589 Berlin, Germany
Phone +49 (30) 69003-0
Fax +49 (30) 69003-104

www.baumer.com
Email: sales@baumerhuebner.com

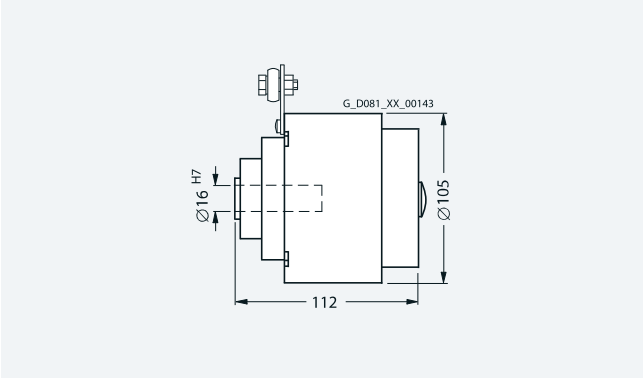

Mounting dimensions of HOG 10 D 1024 I rotary pulse encoder

Technical specifications for HOG 10 D 1024 I (HTL version)

Mounting of encoder for temperatures below −20 °C and higher than +40 °C available on request.

Supply voltage U_B	**+9 V to +30 V**
Current input without load	approx. 100 mA
Admissible load current per output	600 mA, 300 mA peak
Pulses per revolution	1024
Outputs	4 short-circuit proof square-wave pulses A, B and A', B'
Pulse offset between the two outputs	90° ±20 %
Output amplitude	$U_{High} \geq U_B - 3.5$ V $U_{Low} \leq 1.5$ V
Mark space ratio	1:1 ±20 %
Edge steepness	10 V/µs
Maximum frequency	120 kHz
Maximum speed	7000 rpm
Temperature range	−40 to +100 °C
Degree of protection	IP66
Maximum adm. radial cantilever force	150 N
Maximum adm. axial force	80 N
Connection system	Terminals, cable connection M20 × 1.5
Mech. version acc. to Baumer Hübner Ident. No.	74 055 B
Weight	approx. 1.6 kg

© Innomotics 2024

Introduction

Overview

Sendix 5020 rotary pulse encoder

The Sendix 5020 rotary pulse encoder can be ordered completely assembled as an HTL version with order code **G11** or as a TTL version with order code **G12**.

Features of the **G11** and **G12** encoders:

- Use of insulation to avoid surge currents
- Safety-lock technology for high resistance to vibrations, shaft loads, and installation errors
- Cable lengths available up to 300 m

In combination with a separately driven fan, the rotary pulse encoders are supplied with an external plug connection. The rotary pulse encoder can only be attached to a standard NDE shaft extension, meaning that a second shaft extension will not be available.

The encoder can be retrofitted. When the motor is ordered, the option "Prepared for mountings, center hole only" order code ***G40*** *or the option "Prepared for mountings with* ***D12*** *shaft" order code G41 must be specified.*

The dimensions of the motor are increased by Δl by mounting the rotary pulse encoder. The "Modular technology" and "Special technology" rotary pulse encoders are fitted with a protective cover made from corrosion-resistant sheet metal as standard. Mounted encoders for temperatures below −20 °C and above +40 °C are available on request.

Technical specifications for Sendix 5020 (HTL/TTL version)

	Sendix 5020 (HTL version)	Sendix 5020 (TTL version)
Supply voltage	10 ... 30 V DC	5 V DC ± 5 %
Energy consumption with inverted signal (no-load operation)	max. 100 mA	max. 90 mA
Admissible load/channel	max. ± 40 mA	max. ± 20 mA
Pulses per revolution	1024 (2048 and 512 on request)	
Outputs	2 square-wave pulses A, B – 2 inverted square-wave pulses A, B	
Pulse offset between the two outputs	90°	
Signal level	U_{High} = min. U_B – 1 V U_{Low} = max. 0.5 V	U_{High} = min. 2.5 V
Edge rise time t_r	max. 1 µs	max. 200 µs
Edge fall time t_f	max. 1 µs	max. 200 µs
Pulse frequency	max. 300 kHz	
Maximum speed	12000 rpm/6000 rpm (continuous)	
Operating temperature range	−40 [1] ... +100 °C	
Degree of protection acc. to EN 60529	IP65	
Maximum admissible radial cantilever force	100 N	
Maximum admissible axial force	50 N	
Connection system	12-pin M23 connector (mating connectors are always supplied)	
Certificates	UL, CSA (ATEX on request)	
Weight	0.4 kg	
Explosion protection certificate for explosive areas	Available on request for Zones 2 and 22	
Shock resistance acc. to EN 60068-2-27	3000 m/s², 6 ms	
Vibration resistance acc. to EN 60068-2-6	300 m/s², 10 ... 2000 Hz	

Manufacturer:
Fritz Kübler GmbH
Schubertstrasse 47
78054 Villingen-Schwenningen, Germany
Phone +49 (7720) 3903-0
Fax +49 (7720) 21564

www.kuebler.com/drehgeber
Email: info@kuebler.com

[1] With connector: −40 °C, permanently installed cable: −30 °C, moving cable: −20 °C.

© Innomotics 2024

Overview

Rotary pulse encoders for SIL2, SIL3 safety applications

The rotary pulse encoders with order codes **G21**, **G22**, **G25**, and **G27** are suitable for SIL2 and SIL3 safety applications and can be used subject to consideration of the mechanical installation conditions. The rotary pulse encoders from Baumer, Leine&Linde, and Kübler are designed for the implementation of safety-related functions, such as speed, direction of rotation, and position.

Functional safety

The safety integrity level SIL2 or SIL3 of the rotary pulse encoders is certified by the manufacturers Baumer, Leine&Linde, and Kübler. To ensure correct functioning of the rotary pulse encoder, various mounting measures are defined that are certified by TÜV and must correspond to safety applications up to levels PLd, category 3, SIL2 and PL e, category 4, SIL3.

The EC Declaration of Conformity complies with the Machinery Directive 42/2006/EC with consideration of EN 61800-5-2.

- Functional safety can only be ensured with the use of a suitable control and evaluation unit. It is mandatory to perform a function test in the safety circuit after initial installation, conversion, repair or modification.
- Installation, first commissioning and service requiring replacement of a rotary encoder on the customer's site must only be performed by qualified persons. If this requirement is not observed, the manufacturer's warranty will be voided.
- Upgrading with the functional safety rotary encoder for the defined Innomotics products that were originally manufactured without it is permissible on request provided that the upgrade is performed only in lead repair centers.
- Before you commission the motor with the functional safety encoder, read the information in the operating instructions.

General technical features

- The standard version of the motor is supplied with the order code **G43** (mechanical protection for encoder) and with a torque arm fitted between the encoder and motor.
- The functional safety encoders cannot be combined with the order codes **G40**, **G41**, and **G42** (prepared for externally mounted components) and can only be mounted at the non-drive end (NDE), i.e. a second shaft extension cannot be supplied.
- The safety rotary encoders with order code **G21** or **G22** are mounted with their cable and connector.
- The overall length of the motor and weight of the motor must be considered, see "Dimensions and weights".

Sendix 5834FS2/FS3 rotary pulse encoder

The Sendix 5834 rotary pulse encoder from Kübler in the version SinCos can be used in compliance with safety integrity level SIL2 when mounted complete on motors with the order code **G21** or SIL3 with the order code **G22** for frame sizes 71 to 315.

Technical specifications for Sendix 5834FS2/FS3

	Sendix 5834FS2/FS3
Supply voltage	5 V DC ± 5 %
Current input without load	max. 70 mA
Pulses per revolution	1024
Outputs	Sine signal: B, B_inv Cosine signal: A, A_inv
Maximum frequency	400 kHz
Signal level	1 Vpp
Maximum speed	9000 rpm/6000 rpm (continuous)
Operating temperature range	–40 ... +90 °C
Degree of protection acc. to EN 60529	IP65
Maximum admissible axial force	40 N
Maximum admissible radial cantilever force	80 N
Connection system	12-pin connector M23 with 1 m cable
Certificates	PLD/SIL2 – SIL 3/PLe
Weight	0.45 kg
Shock resistance acc. to EN 60068-2-27	500 m/s², 11 ms
Vibration resistance acc. to EN 60068-2-6	200 m/s², 10 ... 150 Hz

Manufacturer:
Fritz Kübler GmbH
Schubertstrasse 47
78054 Villingen-Schwenningen, Germany
Phone +49 (7720) 3903-0
Fax +49 (7720) 21564

www.kuebler.com/drehgeber
Email: info@kuebler.com

© Innomotics 2024

Introduction

Overview

HOGS 100 S rotary pulse encoder

The HOGS 100 S rotary pulse encoder from Baumer in the version SinCos can be used in compliance with safety integrity level SIL2 when mounted complete on motors with order code **G25** for frame sizes 180 to 450.

Technical specifications for HOGS 100 S

	HOGS 100 S
Supply voltage	5 V DC ± 10 %
Current input under load	≤ 150 mA
Sine cycles per revolution	1024
Operating speed	≤ 10000 rpm
Signal frequency	≤ 250 kHz
Temperature range	−20 ... +85 °C
Degree of protection	IP66
Maximum adm. axial force	250 N
Maximum adm. radial cantilever force	400 N
Connection system	Terminal box
Anti-corrosion protection	Complies with corrosivity category C4 acc. to ISO 12944-2
Explosion protection (gas)	II 3G Ex nA IIC T4 Gc
Explosion protection (dust)	II 3D Ex tc IIIC T135°C Dc
Functional safety	PL d / SIL2
Weight	1.8 kg

Manufacturer:
Baumer Hübner GmbH
Max-Dohrn-Str. 2+4
10589 Berlin, Germany
Phone +49 (30) 69003-0
Fax +49 (30) 69003-104

www.baumer.com
Email: sales@baumerhuebner.com

FSI 862 rotary pulse encoder

This FSI 862 rotary pulse encoder is extremely rugged and is therefore suitable for difficult operating conditions.
This rotary pulse encoder in a HC HTL (High Current HTL) version can be used in compliance with safety integrity level SIL2 when mounted complete on motors with order code **G27** for frame sizes 180 to 450.

Technical specifications for FSI 862

	FSI 862
Supply voltage	9 ... 30 V DC
Current input	60 mA at 24 V DC (max. 80 mA)
Output current	± 40 mA
Pulses per revolution	1024 or 2048
Outputs	HCHTL
Pulse offset between the two outputs	90° el ± 25° el
Pitch error	± 50 el
Cable length	max. 350 m at 100 kHz
Maximum speed	6000 rpm
Temperature range	−40 ... +85 °C
Degree of protection	IP66 (IP67)
Maximum adm. radial cantilever force	100 N
Maximum adm. axial force	300 N
Connection system	Cable gland M20
Weight	approx. 1.3 kg
Shock resistance acc. to	≤ 400 g, 3.5 ms EN 60068-2-27
Vibration resistance acc. to	≤ 20 g, 55 ... 2000 Hz EN 60068-2-6

Manufacturer:
Leine und Linde AG
Olivehällsvägen 8
SE-64542 Strängnäs
Phone +46 152 265 00
Fax +46 152 265 05

www.leinelinde.com
Email: info@leinelinde.de

© Innomotics 2024

Overview

XSI 850 rotary pulse encoder

The XSI 850 with HC HTL (High Current HTL) rotary pulse encoder can be used in compliance when mounted complete on motors with order code **G93** for frame sizes 180 to 450.

More information:

- programming of 4 logical signals
- available settings
  Overspeed
  Underspeed
  Programmable level: Standstill to 6000 rpm
  Direction

Technical specifications for XSI 850

	XSI 850
Supply voltage	9 ... 30 V DC
Current input	60 mA at 24 V DC (max. 80 mA)
Output current	± 40 mA
Pulses per revolution	1024
Outputs	HCHTL
Pulse offset between the two outputs	90° el ± 25° el
Pitch error	± 50 el
Cable length	max. 350 m at 100 kHz
Maximum speed	6000 rpm
Temperature range	−20 ... +85 °C
Degree of protection	IP67
Maximum adm. radial cantilever force	1200 N
Maximum adm. axial force	500 N
Connection system	Cable gland M20
Weight	approx. 1.3 kg
Shock resistance acc. to	≤ 400 g, 3.5 ms
Vibration resistance acc. to	≤ 20 g, 55 ... 2000 Hz

Manufacturer:
Leine und Linde AG
Olivehällsvägen 8
SE-64542 Strängnäs
Phone +46 152 265 00
Fax +46 152 265 05

www.leinelinde.com
Email: info@leinelinde.de

XHI 861 rotary pulse encoder

The XHI 861with HC HTL (High Current HTL) rotary pulse encoder can be used in compliance when mounted complete on motors with order code **G94** for frame sizes 180 to 450.

More information:

- programming of 4 logical signals
- available settings
  Overspeed
  Underspeed
  Programmable level: Standstill to 6000 rpm
  Direction

Technical specifications for XHI 861

	XHI 861
Supply voltage	9 ... 30 V DC
Current input	60 mA at 24 V DC (max. 180 mA)
Output current	± 40 mA
Pulses per revolution	1024
Outputs	HCHTL
Pulse offset between the two outputs	90° el ± 25° el
Pitch error	± 50 el
Cable length	max. 350 m at 100 kHz
Maximum speed	6000 rpm
Temperature range	−20 ... +85 °C
Degree of protection	IP67
Maximum adm. radial cantilever force	1200 N
Maximum adm. axial force	500 N
Connection system	Cable gland M20
Weight	approx. 1.3 kg
Shock resistance acc. to	≤ 200 g, 6 ms
Vibration resistance acc. to	≤ 20 g, 55 ... 2000 Hz

Manufacturer:
Leine und Linde AG
Olivehällsvägen 8
SE-64542 Strängnäs
Phone +46 152 265 00
Fax +46 152 265 05

www.leinelinde.com
Email: info@leinelinde.de

© Innomotics 2024

Introduction

Overview

Backstop, counterclockwise/clockwise motion blocked

The backstop (order code **F40**/**F41**) prevents the motor from moving while in de-energized state against its direction of rotation in the energized state.

The backstop is only available for Innomotics SD – 1LE15/1LE16, 1LE55/1LE56, VSD10, VSD4000 motors.

- Counterclockwise motion blocked: Order code **F40**
- Clockwise motion blocked: Order code **F41**

Motor series	Frame size	No. of poles	Backstop Type	Rated torque, theoretical	Start speed	Maximum speed	Order code **F40** Δl	Order code **F41** Δl
				Nm	rpm	rpm	mm	mm
1LE15/1LE16 1FP15	132	2, 4, 6, 8	FXM 66-25 NX	950	700	5000	114	114
	160	2, 4, 6, 8	FXM 76-25 NX	1200	670	5000	130	130
	180	2, 4, 6, 8	FXM 76-25 NX	1200	670	5000	126	126
	200	2, 4, 6, 8	FXM 86-25 NX	1600	630	5000	137	137
	225	2, 4, 6, 8	FXM 86-25 NX	1600	630	5000	183	183
	250	2, 4, 6, 8	FXM 86-25 NX	1600	630	5000	106	106
	280	2, 4, 6, 8	FXM 100-40 MX	3700	400	4500	112	112
	315	2, 4, 6, 8	FXM 120-50 MX	7700	320	4000	115	115
1LE55/1LE56	315	2	FXM 120-50 MX	7700	320	4000	115	115
		4, 6, 8	FXM 140-50 MX	10100	320	3000	115	115
	355	2	FXM 120-50 MX	7700	320	4000	155	155
		4	FXM 140-50 MX	10100	320	3000	155	155
		6, 8	FXM 170-63 MX	20500	250	2700	155	155

Protective cover diameter

Frame size	Protective cover for separately driven fan	Protective cover	Protective cover for encoder		Protective cover for encoder adapter	Protective cover
		H00	**G11/G12**	**G04 … G06**	**G41/G42**	**F75**
	mm	mm	mm	mm	mm	mm
71	140	125	125	–	–	–
80	157	155	155	–	155	160
90	177	155	155	–	155	180
100	210	195	195	195	195	195
112	249	195	195	195	195	195
132	300	260	260	260	260	260
160	338	260	260	260	260	260
180	340	340	165	340	340	340
200	338	340	165	340	340	340
225	470	425	165	250	165	–
250	470	470	165	250	165	–
280	525	525	165	250	165	–
315	590	525	165	250	165	–
355	On request	On request	On request	On request	On request	On request
400	On request	On request	On request	On request	On request	On request
450	On request	On request	On request	On request	On request	On request

© Innomotics 2024

Overview

Dimensions and weights

Fig. 1 Brake,
order codes **F01/F04**
[optionally with manual release, order code **F50**]

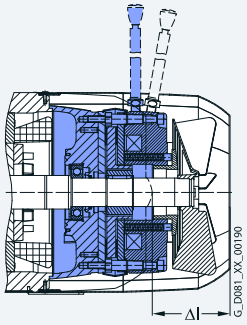

Fig. 2 Rotary pulse encoder (on cover)
Order codes **G04/G05/G06/G11/G12**
[**G11, G12** protective cover as standard]

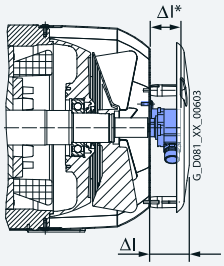

Frame size	**Assignment** **Fig. 1** Brake		**Fig. 2** Rotary pulse encoder including protective cover (G43)							
			LL 861 900 220		**HOG 9 DN 1024 I**		**HOG 10 D 1024 I**		**Sendix 5020**	
	Order codes		Order code		Order code		Order code		Order codes	
	F01/F04		**G04**		**G05**		**G06**		**G11/G12**	
	ΔI	Weight, approx.	ΔI	Weight, approx.	ΔI	Weight, approx.	ΔI	Weight, approx.	ΔI	Weight, approx.
	mm	kg	mm	kg	mm	kg	mm	kg	mm	kg
1LE1										
80	60	3.5	–	–	–	–	–	–	68.5	0.8
90	77.5	5.3	–	–	–	–	–	–	68.5	0.8
100	81	5.9/9.1	83	1.9	83	1.5	126	2.2	56	1.0
112	88	7.8/11.8	83	1.9	83	1.5	126	2.2	56	0.9
132	114	11.9/17.6	87	2.4	87	2	130	2.7	60	1.4
160	130	30.7/40.5	87	2.7	87	2.3	130	3	60	1.6
180	126	28/37.8	136.5	2.3	136.5	1.9	136.5	2.6	87	2.2
200	137	38/53.8	136.5	2.5	136.5	2.1	136.5	2.8	87	2.4
225	135/199	63/49	135	2	135	1.6	135	2.3	87	1
250	225/185	83/54	135	2	135	1.6	135	2.3	87	1
280	297/192	118/92	135	2	135	1.6	135	2.3	87	1
315	308/188	256/167	135	2	135	1.6	135	2.3	87	1
1LE5										
280	297/192	118/92	135	2	135	1.6	135	2.3	87	1
315	309	355	135	2	135	1.6	135	2.3	87	1
355	324	425	135	2	135	1.6	135	2.3	87	1
400	On request	On request	On request	On request	On request	On request	On request	On request	On request	On request
450	On request	On request	On request	On request	On request	On request	On request	On request	On request	On request

Frame size	**Assignment** **Fig. 2** Rotary pulse encoder without protective cover							
	LL 861 900 220		**HOG 9 DN 1024 I**		**HOG 10 D 1024 I**		**Sendix 5020**	
	Order code		Order code		Order code		Order codes	
	G04		**G05**		**G06**		**G11/G12**	
	ΔI*	Weight, approx.	ΔI*	Weight, approx.	ΔI*	Weight, approx.	ΔI*	Weight, approx.
	mm	kg	mm	kg	mm	kg	mm	kg
1LE1								
225	75	1.3	72	0.9	116	1.6	65	0.4
250	75	1.3	72	0.9	116	1.6	65	0.4
280	75	1.3	72	0.9	116	1.6	65	0.4
315	75	1.3	72	0.9	116	1.6	65	0.4
1LE5								
280	75	1.3	72	0.9	116	1.6	65	0.4
355	On request	On request	On request	On request	On request	On request	On request	On request
400	On request	On request	On request	On request	On request	On request	On request	On request
450	On request	On request	On request	On request	On request	On request	On request	On request

© Innomotics 2024

Introduction

Dimensions and weights of the mountings

Overview

Fig. 3 Brake and rotary pulse encoder (on cover), order codes **F01/F04** **+ G04/G05/G06/G11/G12** [optionally with manual release, order code **F50**; **G11, G12** protective cover as standard]

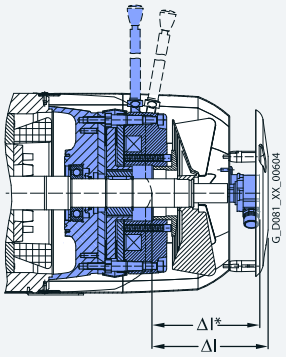

Fig. 4 Separately driven fan, order code **F70**

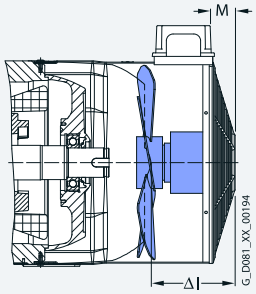

Frame sizes 100 to 200

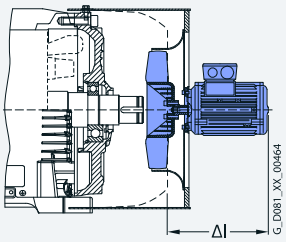

Frame sizes 225 to 315

Frame size	**Assignment Fig. 3** Brake and rotary pulse encoder (on cover)								**Fig. 4** Separately driven fan		
	LL 861 900 220 Order codes **F01 + G04**		**HOG 9 D 1024 I** Order codes **F01 + G05**		**HOG 10 D 1024 I** Order codes **F01 + G06**		**Sendix 5020** Order codes **F01 + G11/G12**		Order code **F70**		
	ΔI*	Weight, approx.	ΔI*	Weight, approx.	ΔI*	Weight, approx.	ΔI	Weight, approx.	ΔI	M	Weight, approx.
	mm	kg	mm	kg	mm	kg	mm	kg	mm	mm	kg
1LE1											
71	–	–	–	–	–	–	–	–	75	20	1.9
80	–	–	–	–	–	–	128.5	4.3	88	20	1.9
90	–	–	–	–	–	–	146	6.1	104	30	2.5
100	164	7.8/11	164	7.4/10.6	207	8.1/11.3	137	6.9/10.1	86.5	30	2.6
112	171	9.7/13.7	171	9.3/13.3	214	10/14	144	8.7/12.7	81.5	30	2.9
132	201	14.3/20	201	13.9/19.6	244	14.6/20.3	174	13.3/19	116	40	3.9
160	217	33.4/43.2	217	33/42.8	260	33.7/43.5	190	32.3/42.1	135.5	40	5.6
180	216	30.3/40.1	216	29.9/39.7	252	30.6/40.4	216	30.2/40	257	40	8.3
200	228	40.5/56.3	228	40.1/55.9	264	40.8/56.6	228	40.4/56.2	262	40	9.3
225	210	64.3	207	64.2	251	63.9	186	63.4	259	–	27
250	300	84.3	297	84.2	341	83.9	276	83.4	264	–	30
280	372	119.3	369	119.2	413	118.9	348	118.4	260	–	33
315	383	256.3	380	256.2	424	255.9	359	256.4	312[1]	–	44,8[1]
315	–	–	–	–	–	–	–	–	274[2]	–	41[2]
1LE5											
280	372	119.3	369	119.2	413	118.9	348	118.4	269	–	33
3152-pole	444	357	444	356.6	444	357.3	396	356	307	–	44.6
4-, 6- and 8-pole	–	–	–	–	–	–	–	–	272	–	41.3
355	459	427	459	426.6	459	427.3	411	426	320	–	34.5
400	On request	On request	On request	On request	On request	On request	On request	On request	On request	On request	On request
450	On request	On request	On request	On request	On request	On request	On request	On request	On request	On request	On request

Frame size	**Assignment Fig. 3** Brake and rotary pulse encoder (on cover)							
	LL 861 900 220 Order codes **F04 + G04**		**HOG 9 D 1024 I** Order codes **F04 + G05**		**HOG 10 D 1024 I** Order codes **F04 + G06**		**Sendix 5020** Order codes **F04 + G11/G12**	
	ΔI	Weight, approx.	ΔI	Weight, approx.	ΔI	Weight, approx.	ΔI	Weight, approx.
	mm	kg	mm	kg	mm	kg	mm	kg
1LE1								
225	274	50.3	271	49.9	315	50.6	285.5	49.4
250	260	55.3	257	54.9	301	55.6	271.5	54.4
280	267	93.3	264	92.9	308	93.6	278.5	92.4
315	263	168.3	260	167.9	304	168.6	274.5	167.4

[1] Valid for 4-pole, 6-pole, and 8-pole motors

[2] Valid for 2-pole motors

© Innomotics 2024

Overview

Fig. 5 Brake and separately driven fan, order codes **F01/F04 + F70** [optionally with manual release, order code **F50**]

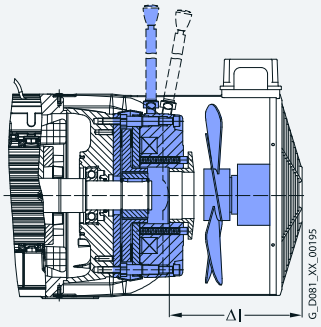

Frame sizes 100 to 200

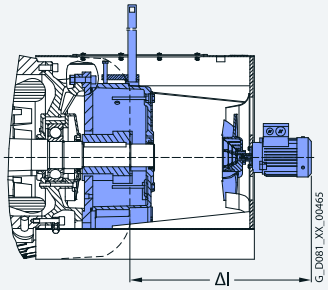

Frame sizes 225 to 355

Fig. 6 Rotary pulse encoder (under cover) and separately driven fan, order codes **F70 + G04/G05/G06/G11/G12**

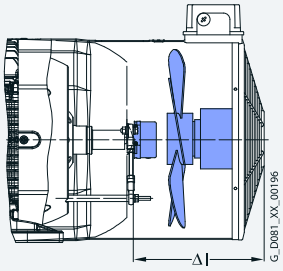

Frame sizes 100 to 200

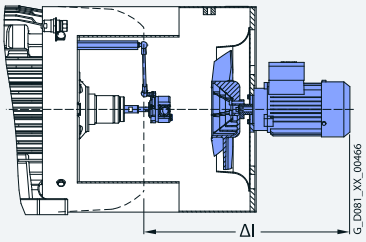

Frame sizes 225 to 355

Frame size	**Assignment** **Fig. 5** Brake and separately driven fan				**Fig. 6** Separately driven fan and rotary pulse encoder (under cover)							
	Order codes **F01 + F70**		Order codes **F04 + F70**		Order codes **F70 + G04**		Order codes **F70 + G05**		Order codes **F70 + G06**		Order codes **F70 + G11/G12**	
	ΔI mm	Weight, approx. kg	ΔI mm	Weight, approx. kg	ΔI mm	Weight, approx. kg	ΔI mm	Weight, approx. kg	ΔI mm	Weight, approx. kg	ΔI mm	Weight, approx. kg
1LE1												
71	–	–	–	–	–	–	–	–	–	–	165	2.7
80	161.5	5.4	–	–	–	–	–	–	–	–	161.5	3
90	174	7.7	–	–	–	–	–	–	–	–	174	3.6
100	161.5	6.9	161.5	10.1	161.5	4.8	161.5	4.4	246.5	5.3	161.5	3.9
112	156.5	8.7	156.5	12.7	156.5	5.1	156.5	4.7	241.5	5.6	156.5	4.1
132	186	13.3	186	19	186	6.8	186	6.4	291	7.4	186	5.8
160	205.5	32.3	205.5	42.1	205.5	9.8	205.5	9.4	320.5	10.5	205.5	8.7
180	257	30.2	257	40	257	10.6	257	10.2	400	10.9	257	10.5
200	262	40.4	262	56.2	262	11.8	262	11.4	397	12.1	262	11.7
225	601	92	448	65	448	31	448	31	448	31	448	30
250	618	115	418	81	463	33	463	33	463	33	463	32
280	577	154	577	125	467	36	467	36	467	36	467	35
315 2-pole	617	305	–	–	509	51	509	50	509	51	509	50
315 4-, 6- and 8-pole	579	301	579	208	471	47	471	47	471	47	471	46
1LE5												
280	466	144	416	116	476	37	476	37	476	37	476	37
315 2-pole	633	415.7	–	–	497	46.6	497	46.2	497	46.9	497	45.6
315 4-, 6- and 8-pole	593	413.7	–	–	462	42.3	462	41.9	462	42.6	462	41.3
355	628	471.7	–	–	381	29.5	381	29.1	381	29.8	381	28.5
400	On request	On request	On request	On request	On request	On request	On request	On request	On request	On request	On request	On request
450	On request	On request	On request	On request	On request	On request	On request	On request	On request	On request	On request	On request

© Innomotics 2024

Introduction

Dimensions and weights of the mountings

Overview

Fig. 7 Brake, rotary pulse encoder (under cover) and separately driven fan, order codes **F01/F04 + F70 + G04/G05/G06/G11/G12** [optionally with manual release, order code **F50**]

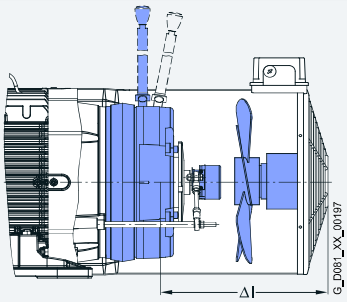

Frame sizes 100 to 200

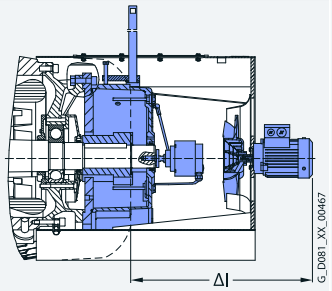

Frame sizes 225 to 355

Fig. 8 Protective cover for separately driven fan, order code **H00**

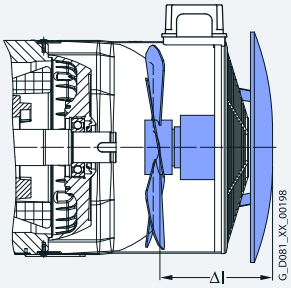

Frame sizes 100 to 200

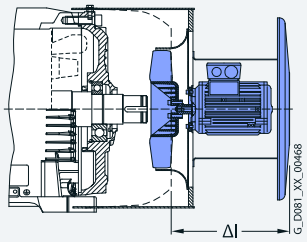

Frame sizes 225 to 355

Frame size	**Assignment Fig. 7** Brake, separately driven fan, and rotary pulse encoder (under cover)						**Sendix 5020**		**Fig. 8** Protective cover for separately driven fan		
	Order codes **F01 + F70 + G04**		Order codes **F01 + F70 + G05**		Order codes **F01 + F70 + G06**		Order codes **F01 + F70 + G11/G12**		Order code **F70+H00**		
	ΔI	Weight, approx.	ΔI	Weight, approx.	ΔI	Weight, approx.	ΔI	Weight, approx.	ΔI	Weight, approx.	Diameter of the separately-driven-fan cover
	mm	kg	mm	kg	mm	kg	mm	kg	mm	kg	mm
1LE1											
80	–	–	–	–	–	–	186.5	6.7	124.5	0.2	157
90	–	–	–	–	–	–	199	9	141.5	0.2	177
100	196.5	10.9	196.5	10.5	246.5	11.5	196.5	10	124	1.4	210
112	191.5	13.1	191.5	12.7	241.5	13.6	191.5	12.1	122	1.8	249
132	241	19	241	18.6	291	19.6	241	18	149	2.4	300
160	270.5	40.9	270.5	40.5	320.5	41.6	270.5	39.8	177	3	338
180	257	38.6	257	38.2	400	40.6	257	38.5	288	1.7	338
200	262	49.9	262	49.1	397	51.5	262	49.7	293	1.7	338
225	601	93.3	601	93.2	601	93.9	601	92.4	305	2.5	427
250	618	116.3	618	116.2	618	116.9	618	115.4	311	2.5	485
280	577	155.3	577	155.2	577	155.9	577	154.4	307	2.5	535
315 2-pole	617	306.3	617	306.2	617	306.9	617	306.9	–	–	–
315 4-, 6- and 8-pole	579	302.3	579	302.2	579	302.9	579	301.4	321[1]	2.5[1]	600[1]
1LE5											
280	586	156	586	1556	586	156	586	156	311	2.5	525
315 2-pole	665	422	665	421.9	665	422.6	665	421.1	402	46.1	618
315 4-, 6- and 8-pole	630	421	630	420.9	630	421.6	630	420.1	317	43.5	618
355	700	478	700	477.9	700	478.6	700	477.1	330	36	695
400	On request	On request	On request	On request	On request	On request	On request	On request	On request	On request	On request
450	On request	On request	On request	On request	On request	On request	On request	On request	On request	On request	On request

Frame size	**Assignment Fig. 7** Brake, separately driven fan, and rotary pulse encoder (under cover)						**Sendix 5020**	
	Order codes **F04 + F70 + G04**		Order codes **F04 + F70 + G05**		Order codes **F04 + F70 + G06**		Order codes **F04+ F70 + G11/G12**	
	ΔI	Weight, approx.	ΔI	Weight, approx.	ΔI	Weight, approx.	ΔI	Weight, approx.
	mm	kg	mm	kg	mm	kg	mm	kg
1LE1								
225	601	72.3	601	71.9	601	72.6	601	71.4
250	618	85.3	618	84.9	618	85.6	618	84.4
280	577	126.3	577	125.9	577	126.6	577	125.4
315	579	209.3	579	208.9	579	209.6	579	208.4
1LE5								
280	536	123	536	123	536	123	536	123
315 2-pole	665	424.7	665	424.3	665	425	665	423.7
315 4-, 6- and 8-pole	630	421.7	630	421.6	630	422	630	420.7
355	700	480.7	700	480.3	700	481	700	479.7

[1] Valid for FS 315 (2, 4, 6, and 8-pole)

© Innomotics 2024

Overview

Fig. 9 Prepared for mountings, center hole only
(for BFK458 brake, order code **F01** and/or encoder order code **G04/G05/G06/G11/G12**),
order code **G40**
(up to frame size 160, standard with frame size 180 and above)

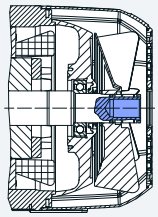

Fig. 10 Prepared for mountings with shaft D12/D16,
order code **G41/G42**

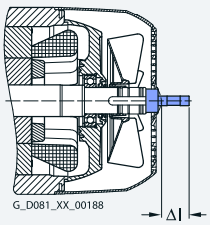

Frame size	**Assignment** **Fig. 9** Prepared for mountings, center hole only (for BFK458 brake, order code **F01** and/or encoder order codes **G04/G05/G06/G11/G12**) order code **G40**		**Fig. 10** Prepared for mountings with shaft D12/D16, order code **G41/G42**			
	Order code **G40**		Order code **G41**		Order code **G42**	
	Δl mm	Weight, approx. kg	Δl mm	Weight, approx. kg	Δl mm	Weight, approx. kg
1LE1						
71	–	–	–	–	–	–
80	–	–	22	0.1	52	0.1
90	–	–	22	0.1	52	0.1
100	–	–	18.3	0.15	54.3	0.2
112	–	–	14.5	0.15	54.3	0.2
132	–	0.1	18.8	0.3	58.8	0.4
160	–	0.2	18.6	0.4	55.6	0.7
180	–	–	18	0.27	57	0.33
200	–	–	17	0.27	56	0.27
225	–	–	23	0.27	58	0.33
250	–	–	23	0.27	58	0.33
280	–	–	23	0.27	58	0.33
315	–	–	23	0.27	58	0.33
1LE5						
280	–	–	23	0.27	58	0.33
315	–	–	23	0.27	58	0.33
355	–	–	23	0.27	58	0.33
400	On request	On request	On request	On request	On request	On request
450	On request	On request	On request	On request	On request	On request

© Innomotics 2024

Introduction

Dimensions and weights of the mountings

Overview

Fig. 11 Standard protective cover for types of construction, order code **H00**

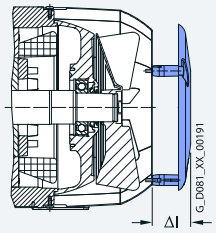

Fig. 12 Protective cover for textile industry, order code **F75**

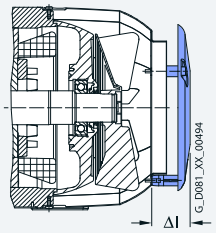

Frame size	**Assignment Fig. 11** Protective cover Order code **H00** Δl mm	Weight, approx. kg	**Fig. 12** Protective cover Order code **F75** Δl mm	Weight, approx. kg
71	29	0.15	–	–
80	128	0.3	17	0.3
90	144	0.4	15	0.4
100	137	0.5	64	0.7
112	122	0.7	64	0.9
132	156	1.3	71	1.3
160	182.5	1.7	71	1.9
180	285	1.7	90	3.2
200	297	1.7	90	3.4
225	100	2.2	On request	On request
250	100	2.4	On request	On request
280	110	3.4	On request	On request
315	110	4	On request	On request
1LE5				
280	110	3.4	On request	On request
315	110	8	–	–
355	140	8.5	–	–
400	On request	On request	–	–
450	On request	On request	–	–

© Innomotics 2024

© Innomotics 2024

Standard motors

© Innomotics 2024

2

© Innomotics 2024

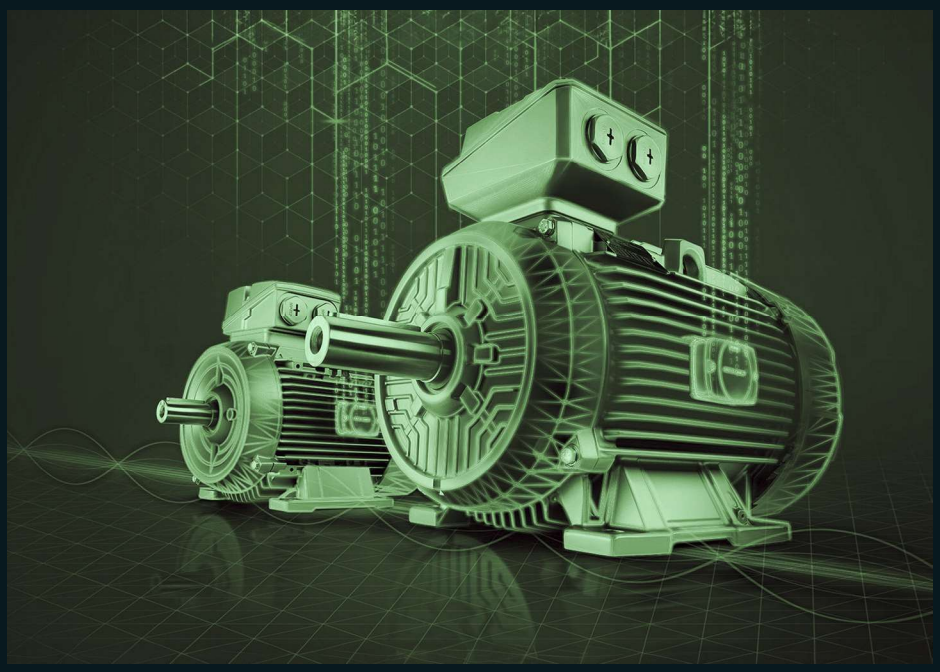

© Innomotics 2024

2 Standard motors

2/2 SIMOTICS CONNECT 400 / SIDRIVE IQ Fleet

2/2 Orientation

2/2 Overview
2/2 Benefits
2/3 Design
2/3 More information

2/4 Connectivity Module

2/4 Technical specifications
2/5 Design
2/6 Ordering data
2/6 Dimensional drawings

2/7 Analytic software

2/7 Overview
2/8 Ordering data

2/10 Commissioning and Usage

2/10 Ordering data

© Innomotics 2024

Innomotics GP and Innomotics SD standard motors

Overview

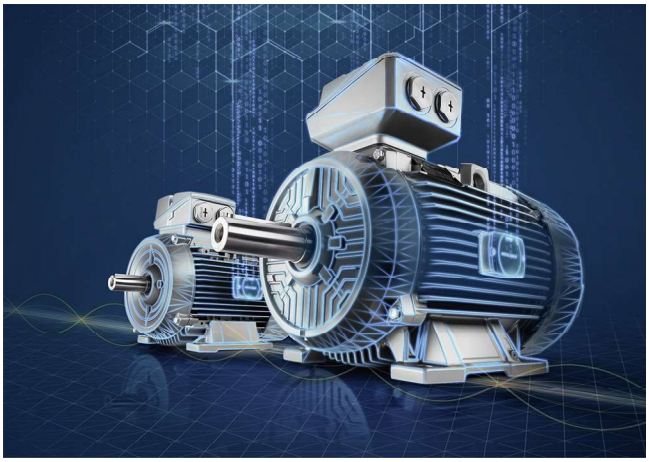

Drive systems keep production running and play a key role in countless production processes. Faults or the failure of individual drive components often result in costly production outages, which is why it's so important to monitor the condition of the machine park. The prevention of failures through timely and planned action requires end-to-end operational transparency and measures such as targeted, proactive maintenance.

With the plug&play connectivity module SIMOTICS CONNECT 400 and the analytics app SIDRIVE IQ Fleet, you can implement a cost effective, cloud-based solution for continuous condition monitoring and comprehensive fleet management of your low-voltage motors – worldwide and 24/7.

Your low-voltage motors are equipped with SIMOTICS CONNECT 400, a connectivity module for measuring and preprocessing the motor-specific status data that's analyzed in SIDRIVE IQ Fleet.

Whether you're monitoring new motors or flexibly upgrading your installed base – in many use cases, the SIDRIVE IQ Fleet MindSphere application improves the reliability, availability, efficiency, performance, and productivity of your low-voltage motors. You take advantage of preventive maintenance for your motors using reliable status data and information on maintenance intervals.

Benefits

- Simplicity and user-friendliness:
  - Simple mounting by gluing the sensor module SIMOTICS CONNECT 400 to the motor
  - Fast commissioning and configuration, thanks to the intuitively operated smartphone app SIDRIVE IQ Config
  - Use of standard network hardware (no manufacturer-specific gateways needed)
- Autonomous design: Power supply via battery pack and data transfer via WLAN require no connecting cables
- Optimized serviceability: Simple as well as ecologically and economically practical maintenance by replacing the battery pack
- Optimum operational transparency: SIMOTICS CONNECT 400 and SIDRIVE IQ Fleet help machine operators to better understand their machines and all relevant components. With knowledge of how the motors are currently running and what changes in operation have occurred, it's possible to make predictions about operational performance in the future.
- Anomaly detection and trend analyses based on historical data for optimizing your plant
- Adjustable limit values and automated alarms help you to detect impending failures well in advance and prevent them through maintenance activities
- Take advantage of our expert knowledge of drive technology by taking into account operational data (including historical), digital twins of the motors, intelligent algorithms, and analytics
- Access to cloud-based analytics in MindSphere from any terminal device via a web browser, without software installation
- Higher data quality and precision for Innomotics motors, thanks to the use of equivalent electrical circuit diagrams, product-specific data from production, and other additional elements from the digital twin of the motor

© Innomotics 2024

Design

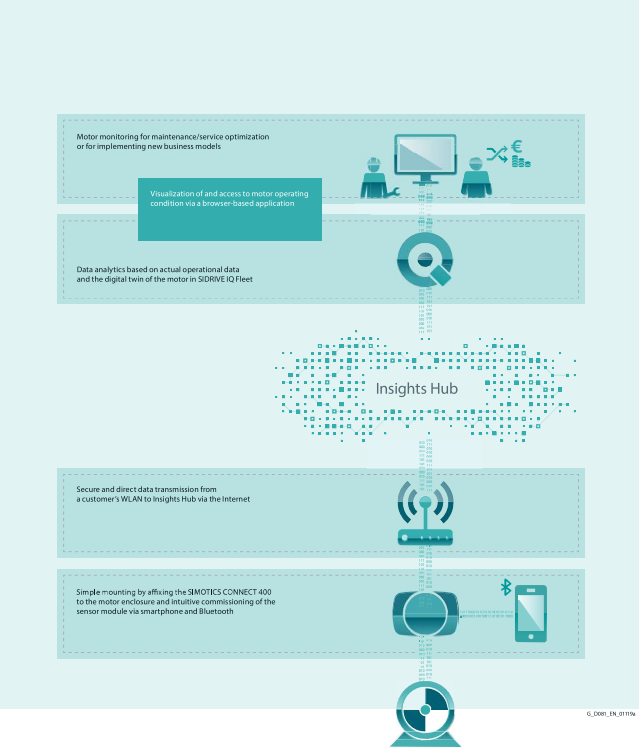

Besides monitoring the actual health of your motor fleet, the cloud-based SIDRIVE IQ Fleet application embedded in the MindSphere ecosystem provides nearly endless opportunities for customer business models.

Enabling new digital business models is a key feature and differentiator in the architecture of SIDRIVE IQ Fleet.

Plug&play is key:

Installation, commissioning and configuration of SIMOTICS CONNECT 400 is as easy as it gets. Operators have the system up and running within minutes.

Data is transferred automatically and therefore guarantees a continuous condition monitoring of your motor fleet.

More information

For further information, please get in touch with your local Siemens contact or use the Digital Motor website.

Contacts: www.siemens.com/automation/partner

Digital Motor: www.siemens.com/digital-motor

Wherever possible, you will find a local contact for:

_ Technical support
_ Spare parts/repairs
_ Service
_ Training
_ Marketing & Sales
_ Technical consultation/engineering

You start by selecting a:

_ Country
_ Product
_ Sector

2

© Innomotics 2024

Technical specifications

General information	
Product category	Sensor and communication module
Product description	SIMOTICS CONNECT 400 with integrated sensors monitors the condition of the motor to make its operation transparent, which facilitates application and process optimizations. SIMOTICS CONNECT 400 can be used in conjunction with the MindSphere app SIDRIVE IQ Fleet only.
Monitoring application	Visualization of motor health status and data analytics based on digital motor twins are offered in the comprehensive SIDRIVE IQ Fleet MindSphere app.
Measured motor parameters	Temperature, radial/tangential/axial vibration, electrical stator frequency, slip frequency.
Calculated motor parameters	Motor state (on/off), rotation speed, torque [1], electrical power [1], energy consumption [1], number of starts, hours of operation
Extended monitoring and maintenance support	External noise cancelling via peak detection for vibration monitoring, automatic threshold suggestions, maintenance requirements, such as relubrication interval
Supported motors	Fin-cooled, 3-phase asynchronous low-voltage motors in line operation (DOL) and converter operation (VSD), IEC frames sizes 80 to 450 and NEMA frame sizes 48 to 680.
Installation/mounting	
Mounting type and position	Externally mounted on the motor's cooling fins with a mounting bracket (glued). As described in the installation instructions.
Qualified adhesives	HENKEL LOCTITE HY 4090, Weicon Fast Metal Minute Adhesive, 3M Scotch-Weld DP 8407 NS
Power supply	
Type of supply	Battery pack (LI/$SOCl_2$, 3,6 V, 4 cells, AA size, non-rechargeable)
Battery lifetime	Operating time up to 2 years [2], replaceable for lifetime extension.
Internal data storage	
Internal flash	Data storage of min. 48 hours [3], when MindSphere connection is interrupted.
Communication	
Bluetooth	Used for configuration and commissioning [4] _ Compliance with Bluetooth v4.1 _ Frequency: 2400 to 2482 GHz _ Range: up to 10 m
WLAN	Used for data transmission [5] and firmware updates. _ IEEE 802.11 b/g/n _ Frequency: 2400 to 2485 GHz _ Range: up to 100 m
Status information	
Indication LED (blue)	Status information during configuration process.
Integrated sensors	
Measurement interval	Configurable between 1 minute and 1 hour (default: 5 minutes).
Temperature measurement	
Range	-40 to +85° C
Resolution	0,03° Temperature measured at the contact between connectivity module and mounting bracket.
Vibration measurement	
Physical measuring principle	Overall vibration V_{RMS} 3-axis
Range	0.02 to 180 mm/s 10 Hz to 1.6 kHz
Magnetic field measurement	
Range	0.01 to 300 Hz Rotary stray field
Standards, approvals, certificates	
	CE, FCC, IC, SRRC, RCM, ETA, SDPPI, ICASA, SUBTEL, ARCOTEL, MTC, FAC, CNC, CRC, NBTC, IMDA, OFCA, MOC, KVALITET, ICT, SIGET
Degree and class of protection	
Degree of protection acc. to EN 60529	IP54 (device variant ≤ FS03 up to 12-2021) IP65 (device variant FS03 from 12-2021)
Shock resistance	Max. 100 m/s^2 (tested acc. Class 3M4)

1) For motors in converter operation (VSD) not available, extension via firmware update.
2) At an ambient temperature of 0 to 40° C, a measurement interval of 5 minutes and a transmission of the stored data once every 24 hours.
3) At measurement interval of 1 minute.
4) Commissioning consists of integration into the local WLAN network and onboarding to MindSphere.
5) MindSphere synchronization interval adjustable between 1 and 48 hours (default: 24 hours).

© Innomotics 2024

Technical specifications

Ambient conditions	
Ambient temperature during operation	-40 to +80° C
Ambient temperature during storage/ transportation	-20 to +40° C
Relative humidity	5 to 95 % (without condensation)
Software	
Mobile app for commissioning and configuration	SIDRIVE IQ Config (iOS, Android)
SIMOTICS CONNECT Firmware Update	Prepared for remote firmware update via MindSphere (v0.6.0.0 or newer)
Mechanics/material	
Housing material	Industrial Plastic Durethan® (polyamide, halogen-free, glass-fiber reinforced)
Material of the _ mounting bracket _ screws	 stainless steel steel, galvanized and passivated
Dimensions	
_ Length x height x depth	IP54 version: 125 x 76 x 29 mm IP65 version: 125.4 x 77.5 x 29 mm
Weight	
Weight connectivity module, approx..	0.25 kg
Weight connectivity module including mounting material, approx.	0.5 kg
Documentation and information	
More technical product information and documentation is available at:	www.siemens.com/digital-motor

Design

The delivery is made as a single product packaging:

_ SIMOTICS CONNECT 400 connectivity module including batteries (battery plug disconnected during transport)
_ Metal mounting bracket for installation on the motor housing
_ Retaining screws
_ Assembly instructions
_ Safety and security information sheet
_ CD with license texts

Hinweis:
The adhesive is NOT included in the scope of delivery. We recommend using one of the below listed adhesives, which have been tested and qualified by Innomotics:
Henkel LOCTITE HY 4090, Weicon Fast Metal Minute Adhesive, 3M Scotch-Weld DP 8407 NS

© Innomotics 2024

Ordering data

Description	Article No.
SIMOTICS CONNECT 400 Connectivity Kit (1 unit) for connecting low voltage motors to the MindSphere application SIDRIVE IQ Fleet	**9LD2200-0BA00-0AA0**
SIMOTICS CONNECT 400 Connectivity Kit (10 units) for connecting low voltage motors to the MindSphere application SIDRIVE IQ Fleet	**9LD2200-0BA00-0AB0**
SIMOTICS CONNECT 400 Connectivity Kit (35 units) for connecting low voltage motors to the MindSphere application SIDRIVE IQ Fleet	**9LD2200-0BA00-0AC0**
SIMOTICS CONNECT 400 Connectivity Kit (200 units) for connecting low voltage motors to the MindSphere application SIDRIVE IQ Fleet	**9LD2200-0BA00-0AD0**

One unit corresponds to one SIMOTICS CONNECT 400 Connectivity Kit as described above. Each kit is individually packed. Multi-unit packages are additionally bundled in a bigger outer packaging.

Dimensional drawings

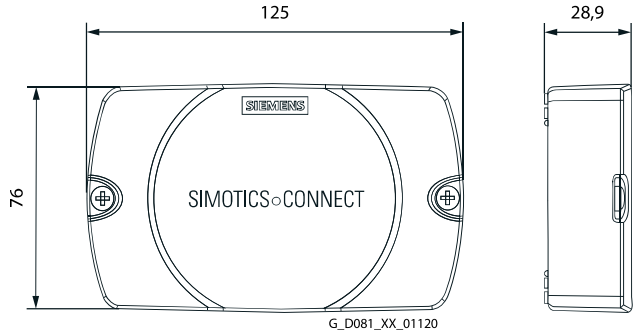

© Innomotics 2024

Overview

MindSphere – the Innomotics IoT-as-a-service solution

MindSphere is the leading industrial IoT as a service solution. Using advanced analytics and AI, MindSphere powers IoT solutions from the edge to the cloud – with data from connected products, plants and systems – to optimize operations, create better quality products and deploy new business models. MindSphere empowers customers and partners to quickly build and integrate personalized IoT applications or utilize the existing ones, such as SIDRIVE IQ Fleet.

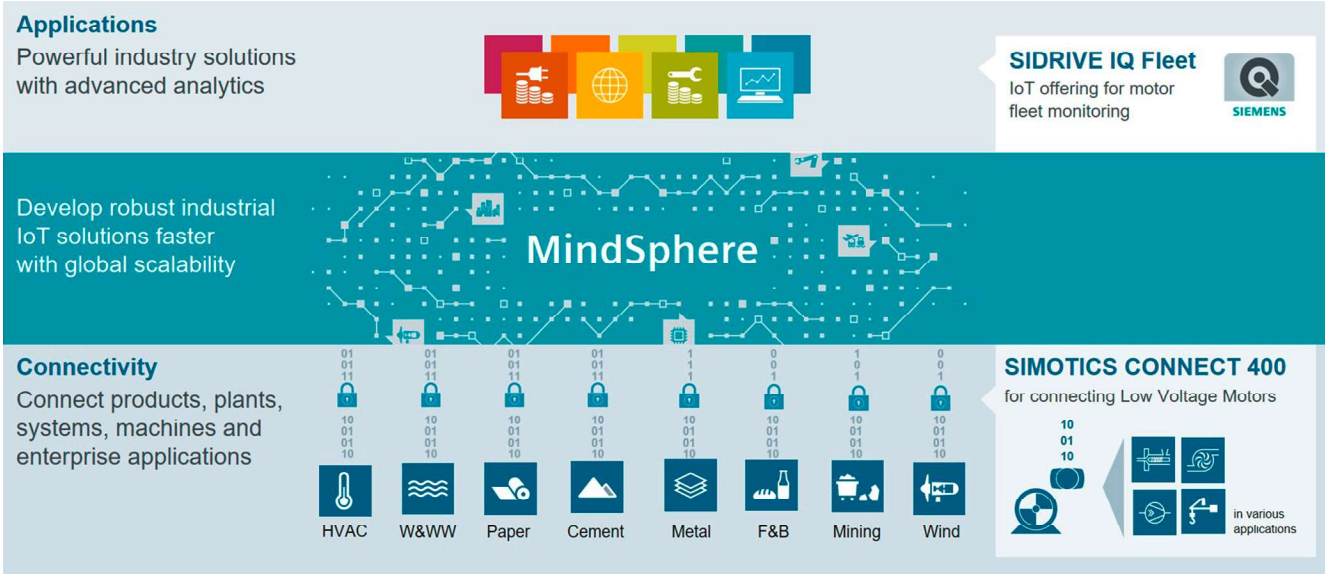

SIDRIVE IQ Fleet – cloud-based solution for motor monitoring

The MindSphere application SIDRIVE IQ Fleet allows you to access all relevant data of your installed motors.

The application includes a variety of functions which assist you in managing motors' maintenance and operations. SIDRIVE IQ Fleet provides you with aggregated statistics and localization of your fleet, as well as individual KPIs, logbook, motor profile and product documentation.

By using SIDRIVE IQ Fleet you can optimize your fleet maintenance tasks, reduce unscheduled downtime and increase your plant availability.

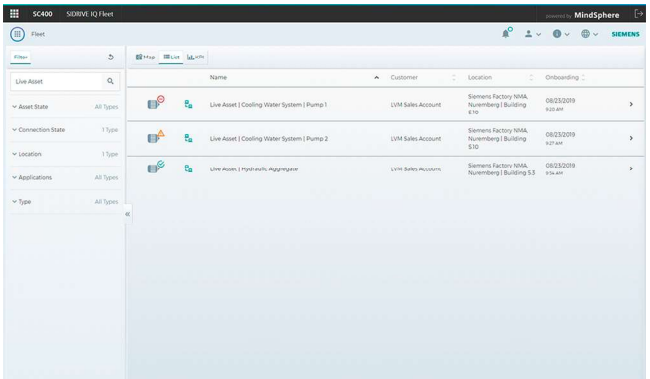

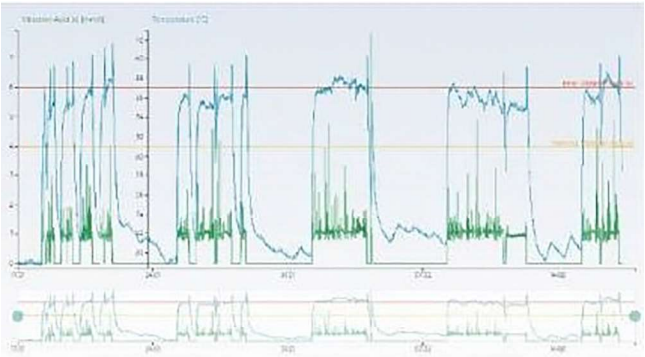

© Innomotics 2024

Ordering data

The SIDRIVE IQ Fleet offering consists of two main package types:

SIDRIVE IQ Fleet Package Basic includes the MindSphere base tenant, the application SIDRIVE IQ Fleet and selected MindSphere resources which are required to access the Platform and to utilize the application.

SIDRIVE IQ Fleet Asset Packages enable you to connect additional motors to your tenant.

Benefit from the pre-defined SIDRIVE IQ Fleet Packages, tailored to your needs. Find the complete SIDRIVE IQ Fleet offering in the MindSphere Store and choose between multiple packages to start your IoT experience by connecting your motors.

2

G_D081_EN_01121a

SIDRIVE IQ Fleet Package Baisc

Description:

- provides unique customer tenant with customizable URL and pre-installed SIDRIVE IQ Fleet application
- deployable also on existing customer IoT Value Plan

Provided value:

- free-of-charge access to MindSphere and motor monitoring application SIDRIVE IQ Fleet
- easy-to-understand business model without any hidden costs

SIDRIVE IQ Fleet Asset Packages

Description:

- increases the connectable assets to the tenant by x assets, depending on the package you purchase
- provides the exact amount of MindSphere recourses needed for connecting and monitoring x motors

Provided value:

- risk-free and convenient scalability thanks to a flexible asset-based payment model
- benefit of lower per-asset-prices ba selecting multiple-asset-packages

All the packages have a standard subscription duration of one year and get automatically renewed at the end of the 12 months. You can find additional information and the terms & conditions in the SIDRIVE IQ Fleet Package Product Sheet.

© Innomotics 2024

Ordering data

Purchasing process via MindSphere Store

Process for your MindSphere account creation and SIDRIVE IQ Fleet Packages purchase via MindSphere Store

If you do not have yet a MindSphere Account, access MindSphere Store and follow the steps below to start your journey with SIDRIVE IQ Fleet.

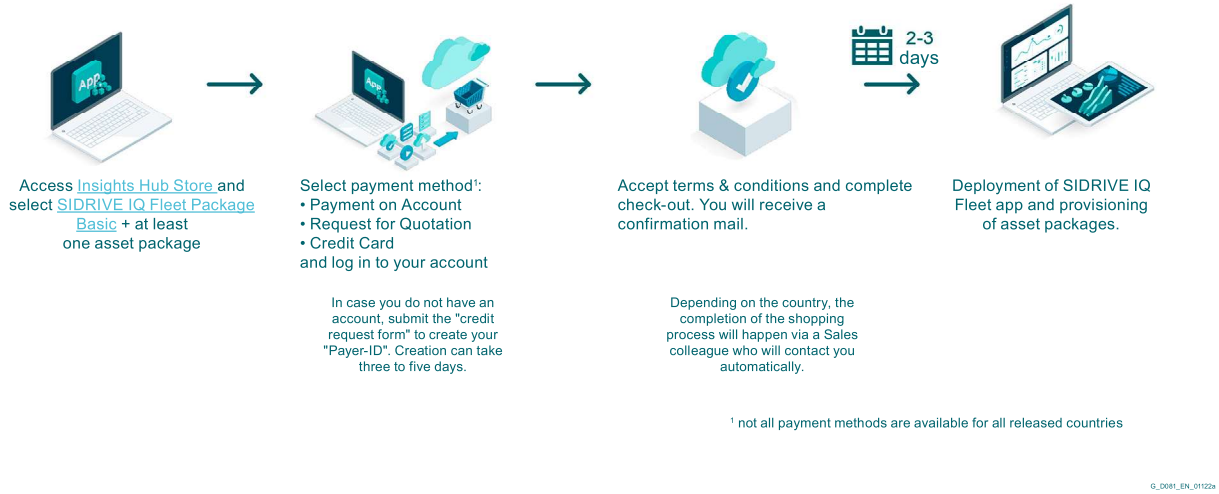

If you already have a MindSphere payer account, you can purchase the packages starting directly with step 3.

You can find more information and a tutorial SIDRIVE IQ Fleet Packages purchasing process on our website www.siemens.com/digital-motor.

© Innomotics 2024

Ordering data

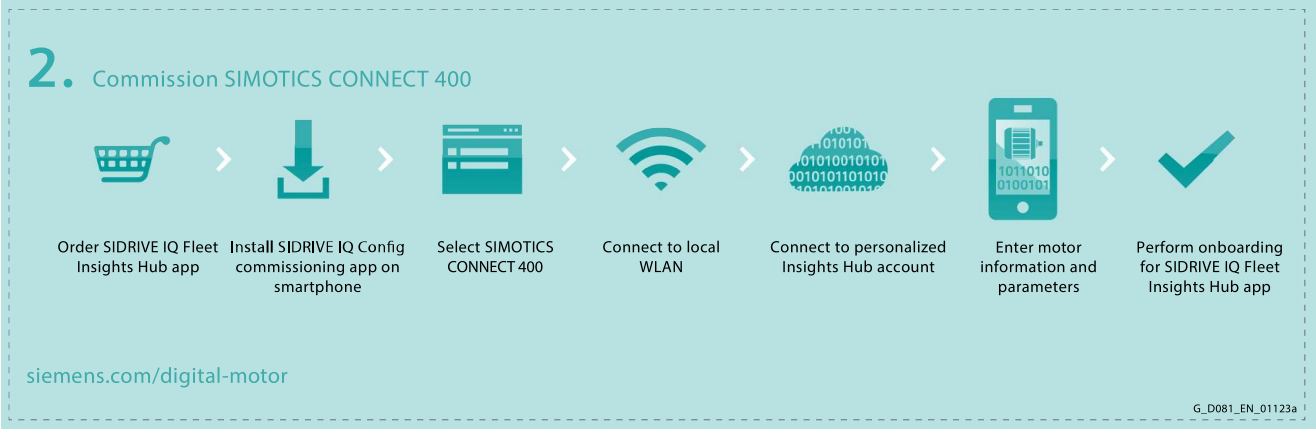

2

- **Get SIDRIVE IQ Fleet app via the MindSphere Store**
  - Order SIDRIVE IQ Fleet Package Basic (tenant and application) plus at least one SIDRIVE IQ Fleet Asset Package,
  - e.g. SIDRIVE IQ Fleet Package 1 Asset
- **Download commissioning app onto your smartphone**
  Install SIDRIVE IQ Config on your mobile device to configure SIMOTICS CONNECT 400
- **Commission SIMOTICS CONNECT 400**
  Integrate the sensor module into the local WLAN network and onboard it to MindSphere by using our intuitive mobile app SIDRIVE IQ Config

© Innomotics 2024

2

© Innomotics 2024

Innomotics GP and Innomotics SD standard motors

© Innomotics 2024

3

© Innomotics 2024

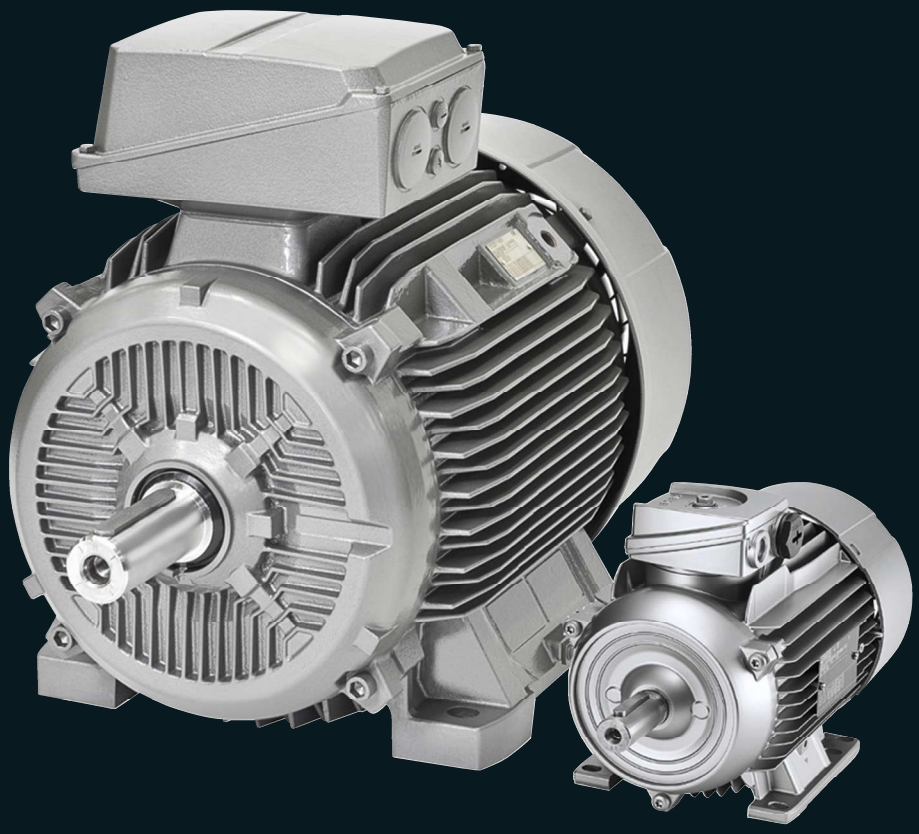

© Innomotics 2024

3 Innomotics GP and Innomotics SD standard motors

3/2 Orientation

3/7 Converter operation

3/8 Article number code

3/9 IE4 Super Premium Efficiency

3/9 Aluminum series Innomotics GP 1LE1004

3/10 Cast-iron series Innomotics SD 1LE1504

3/14 IE3 Premium Efficiency

3/14 Aluminum series Innomotics GP 1LE1003/1LE1083

3/20 Cast-iron series Innomotics SD 1LE1503/1LE1603/ 1LE1583

3/34 IE2 High Efficiency

3/34 Aluminum series Innomotics GP 1LE1001

3/40 Cast-iron series Innomotics SD 1LE1501/1601

3/52 IE1 Standard Efficiency

3/52 Aluminum series Innomotics GP 1LE1002

3/56 Cast-iron series Innomotics SD 1LE1502

3/62 APAC Line · IE3 Premium Efficiency

3/62 Aluminum series Innomotics GP 1LE1043

3/66 Cast-iron series Innomotics SD 1LE1543/1643

3/75 APAC Line · IE2 High Efficiency

3/75 Aluminum series Innomotics GP 1LE1041

3/78 Cast-iron series Innomotics SD 1LE1541

3/81 ABNT Line · IR3 Rendimento Premium

3/81 Aluminum series Innomotics GP 1E1073

3/83 Cast-iron series Innomotics SD 1LE1573, 1LE5773

3/85 Eagle Line · NEMA Premium Efficient MG1 Table 12-12

3/85 Aluminum series Innomotics GP 1LE1023

3/88 Cast-iron series Innomotics SD 1LE1523

3/96 Eagle Line · NEMA Energy Efficient MG1 Table 12-11

3/96 Aluminum series Innomotics GP 1LE1021

3/97 Cast-iron series Innomotics SD 1LE1521

3/98 Pole-changing

3/98 Aluminum series Innomotics GP 1LE1011/1LE1012

3/101 Article No. supplements and special versions

3/101 Voltages
Aluminum series/Cast-iron series

3/107 Types of construction
Aluminum series/Cast-iron series

3/120 Motor protection
Aluminum series/Cast-iron series

3/123 Terminal box position
Aluminum series/Cast-iron series

3/126 Options
Aluminum series/Cast-iron series

3/146 Accessories

3/148 Dimensions

3/148 Notes on the dimensions

3/150 Aluminum series Innomotics GP

3/150 IE4 Frame sizes 100 L to 200 L

3/152 IE3, NEMA Frame sizes 63 M to 200 L

3/164 IR3 Rendimento Premium
Frame sizes 80 M to 160 L

3/166 IE1, IE2, NEMA pole-changing

3/172 Cast-iron series Innomotics SD

3/172 IE4 Frame sizes 100 L to 315 L

3/176 IE3, NEMA Frame sizes 71 M to 315 L

3/180 IE3 1LE1583 Frame sizes 100 L to 315 L

3/184 IR3 Rendimento Premium
Frame sizes 180 M to 315 L

3/188 IE1, IE2, NEMA Energy Efficient
Frame sizes 71 M to 315 L

© Innomotics 2024

Innomotics GP and Innomotics SD standard motors

Overview

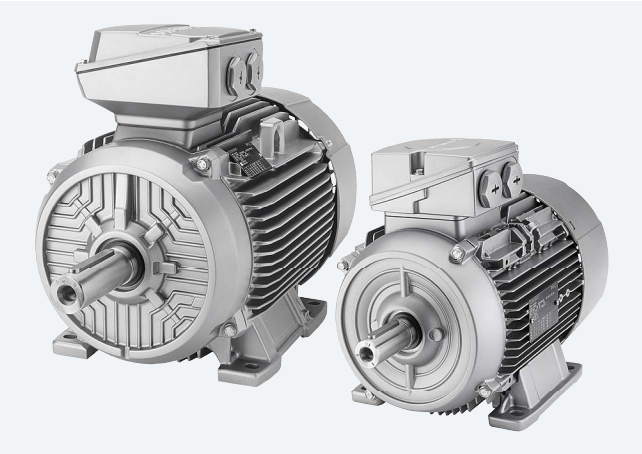

Increasing energy costs have resulted in greater emphasis on the power consumption of drive systems. It is extremely important to utilize the full potential for minimizing energy consumption here to secure competitiveness today and in the future. The environment will also profit from reduced energy consumption.

This is the reason why we have already developed a new generation of low-voltage motors. Innovative rotors create the best requisites for motors with a high degree of efficiency. IE1 and IE2 motors with the same power have the same dimensions. The new motors for IE2, IE3 and IE4 offer considerable energy savings and protect our environment. We also consider environmental compatibility and sustainable use of resources during production. Potting compounds and coatings are, for example, solvent-free.

The modular mounting concept provides total flexibility. Each motor is based on a uniform concept for all markets worldwide. Our motors are manufactured according to the most advanced ecological standards.

The new 1LE1 motor family is therefore one of the most compact in the world, because it is manufactured using innovative technology. For an optimized design, a compound of highly conductive materials is used in the rotor (up to frame size 200). This results in minimum rotor losses and an excellent starting and switching response.

The design of the 1LE1 motors ensures maximum flexibility and minimum installation costs. Users benefit from integral lifting eyes, screw-on feet, reinforced bearing plates with optimum mechanical properties and easily accessible terminal boxes. Encoders, brakes and separately driven fans can also be added without any problems. Smaller inventories make stock-keeping easier, so motor suppliers can respond to customer requirements more quickly.

The 1LE1/1LE5/1PC1 motor family comprises two main series:

Innomotics GP for general purpose applications:
Motors with an aluminum housing

Innomotics GP 1LE1/1PC1 motors with an aluminum housing are suitable for a wide range of standard drive tasks in the industrial environment. Thanks to their particular low weight, they are predestined for applications in pumps, fans and compressors. But they also reliably fulfill their tasks in conveyor systems and lifting gear.

Brief overview	
Power and voltage range:	0.09 ... 45 kW for all commonly used voltages
Frame sizes and types of construction:	63 ... 200 in all common types of construction
Rated speed:	750 ... 3600 rpm
Number of poles:	2, 4, 6, 8
Efficiency classes:	_ IE1 (Standard Efficiency) _ IE2 (High Efficiency) _ IE3 (Premium Efficiency) _ IE4 (Super Premium Efficiency) _ IR3 (Rendimento Premium) _ NEE (NEMA Energy Efficient, acc. to NEMA MG, Table 12-11) _ NPE (NEMA Premium Efficient, acc. to NEMA MG, Table 12-12)

Innomotics SD for severe duty applications:
Motors with cast-iron housing

Innomotics SD 1LE1/1LE5 motors with a cast-iron housing are extremely rugged and are therefore the first choice for applications under harsh environmental conditions.
They master dust or vibration in mills and mixers as well as the corrosive atmosphere in the petrochemical industry.

Brief overview	
Power and voltage range:	0.09 ... 1000 kW for all commonly used voltages
Frame sizes and types of construction:	71 ... 450 in all common types of construction
Rated speed:	750 ... 3600 rpm
Number of poles:	2, 4, 6, 8
Efficiency classes:	_ IE1 (Standard Efficiency) _ IE2 (High Efficiency) _ IE3 (Premium Efficiency) _ IE4 (Super Premium Efficiency) _ IR3 (Rendimento Premium) _ NEE (NEMA Energy Efficient, acc. to NEMA MG, Table 12-11) _ NPE (NEMA Premium Efficient, acc. to NEMA MG, Table 12-12)

© Innomotics 2024

Overview

High efficiency energy-saving motors for a positive energy balance

Depending on requirements, energy-saving motors for a positive energy balance are available that are compliant with the legal requirements applicable in the European economic area in accordance with EU Directive 640/2009 as well as for the North American market in accordance with US federal law EISA (Energy Independence Security Act).

Motors with increased power and compact construction (1LE1)

Motors with increased power and compact construction can be used to advantage in confined spaces. For a slightly longer overall length, the power is at least as high as that of the next largest frame size. These compact motors are also optimized for efficiency. They are offered in IE2 and IE3 and therefore reduce operating costs.

Motors without fan cover and without external fan (1LE1 with order code F90)

Forced-air cooled motors with surface cooling without fan cover and without external fan are mainly used for driving fans.

Motors with reduced power without fan cover and without external fan (1PC1 motors on request)

Naturally cooled motors with surface cooling without fan cover and without external fan are suitable for the following operating conditions:

- Types of duty with adequate cooling times (e.g. temporary duty for positioning drives)
- Environmental conditions that demand compact installation space (e.g. in motors with a stopping function)

Requirements that make an external fan disadvantageous, e.g. simple cleaning in the food industry, textile industry.

Benefits

There is considerable potential in the new 1LE1/1PC1 series of low-voltage motors. As a consistent further development of existing motors, the 1LE1/1PC1 motors offer numerous advantages.

Greater efficiency

Innovative rotor technology and manufacturing technology has been implemented for the IE3 and IE4 high efficiency motor variants. The energy-efficient motors are therefore considerably more compact.

The SinaSave Webtool can be used to calculate the energy saving potential and life cycle costs of all motors. SinaSave can be downloaded free of charge from the following website: www.sinasave.siemens.com

The 1LE1 motors also impress customers with their extremely long life and their weight-optimized design has a positive effect on the stability of the equipment unit.

A wider range of applications

The motors are certified for worldwide use and satisfy high standards of quality (confirmed, for example, by CSA [1], UL [2], CQC [3], UKCA [4]).

Improved design

The rugged housing in modern EMC design has an attractive appearance and enhances functionality. The rotatable, accessible terminal boxes, integral lifting eyes, screw-on feet and reinforced bearing plates ensure this.

Greater power

For the same frame size, the high-performance motors offer one complete rated power level more. We are also consistently implementing energy efficiency improvements here, too. The motors are offered (based on the categories of IEC 60034-30-1) in various efficiency classes.

More flexibility

The optimized design of the motors makes installation easier in general. Encoders, brakes and separately driven fans can be retrofitted easily. Terminal boxes and feet for flexible mounting can be selected. Smaller inventories make stock-keeping easier and motor suppliers can respond to customer requirements more quickly. Optimized manufacturing processes support fast availability. All motors up to 480 V can be operated either directly on the line or on a converter.

For general purpose applications:
Innomotics GP motors with an aluminum housing

Particularly user friendly

The previously introduced, well-proven, obliquely partitioned terminal box is being implemented consistently throughout the entire motor series.

Special export line

For exporting to NAFTA, the Eagle Line is available. The motors are supplied with the electrical values stamped on the rating plate in accordance with EISA requirements.

[1] Canadian Standard Association
[2] Underwriters Laboratories Inc.
[3] China Quality Certification
[4] UK Conformity Assessed

© Innomotics 2024

Innomotics GP and Innomotics SD standard motors

Benefits

For severe duty applications:
Innomotics SD motors with a cast-iron housing

The right motor for various challenges

The following lines are available for severe duty applications:

- Basic Line (1LE15): rugged, reliable motors for machine construction
- Performance Line (1LE16): Motors for the process industry with reinforced bearings and a more rugged coating – for requirements that extend beyond the Basic Line
- "Eagle Line": Motors for exporting to the NAFTA zone; they fulfill the requirements of UL and CSA and are supplied with the electrical values stamped on the rating plate in accordance with EISA requirements

Comparison: Basic Line versus Performance Line

Function	Basic Line	Performance Line
Bearing size	62 (63 from frame size 280 upwards)	63
Relubrication	Optional (standard from frame size 280 upwards)	Standard from frame size 160 upwards (optional for frame size 100 to 132)
Paint system	Standard paint finish, corrosivity category C2 [1]	Special paint finish, corrosivity category C3 [1]
Drainage	Drain plugs	T drains
Rating plate	Aluminum, plastic	Steel
Motor protection	Optional	PTC
Fan cover	Plastic	Steel
Warranty	Standard 12 months (optionally 36 months for frame sizes 180 to 315)	Standard 36 months

Compact design

The size of a motor is often an important aspect in the case of machines. For this reason, the 1LE1 motors in IE2 and IE3 are not any longer than their predecessors in the 1LG series in IE2.

Another highlight: some of the IE3 motors fit in the same housing as the IE2 motors. The efficiency classes naturally do not differ with regard to shaft height, so that the mechanical interface to the equipment unit remains the same. This also supports a largely problem-free efficiency upgrade to IE3 – without the need to adapt the mechanical design of a machine.

Greater power

In severe duty applications, motors with increased power can also be the right solution if sufficient space is not available for a standard motor. Because these motors offer the same power range in the next smallest frame size.

Application

As soon as the range of motors and options is complete, it will be possible to use the 1LE1/1PC1 motors from Innomotics in all areas and sectors of industry due to their numerous options. They are suitable both for special environmental conditions such as those that predominate in the chemical or petrochemical industry as well as for most climatic requirements such as those of offshore applications.

Their large range of line voltages enables them to be used all over the world.

The wide field of implementation includes the following applications:

- Pumps
- Fan
- Compressors
- Conveyor systems such as cranes, belts and lifting gear
- High-bay warehouses
- Packaging machines
- Automation and drives
- Manufacturing industry
- General machine construction

Motors with a cast-iron housing are particularly suitable for the following severe duty applications:

- Petrochemical industry
- Pharmaceuticals
- Chemical industry
- Printing industry
- Process industry

[1] See also Chapter 1, pages 1/15 and 1/16.

© Innomotics 2024

Technical specifications

Overview of technical specifications

This table lists the most important technical specifications. For more information and details, see Catalog Section 1 "Introduction".

Type of motor	Innomotics GP/SD 1LE1/1LE5/1PC1 IEC Low-Voltage Motors
Connection types	Star/delta connection The connection type to be used can be established from the Article No. supplements for the required motor.
Number of poles	2, 4, 6, 8
Frame sizes	63 M ... 315 L
Rated power	0.09 ... 300 kW (1LE1/1LE5 motor series)/0.3 ... 9 kW (1PC1 motor series)
Frequencies	50 Hz and 60 Hz
Versions	Self-ventilated 1LE1 energy-saving motors with: _ IE1 (Standard Efficiency) _ IE2 (High Efficiency) _ IE3 (Premium Efficiency) _ IE4 (Super Premium Efficiency) _ IR3 (Rendimento Premium) _ NEE (NEMA Energy Efficient, acc. to NEMA MG, Table 12-11) _ NPE (NEMA Premium Efficient, acc. to NEMA MG, Table 12-12) Self-ventilated 1LE1 motors with increased power with: _ IE1 (Standard Efficiency) _ IE2 (High Efficiency) _ IE3 (Premium Efficiency) Forced-air cooled 1LE1 motors without external fan and fan cover with: _ IE1 (Standard Efficiency) _ IE2 (High Efficiency) _ IE3 (Premium Efficiency) _ IE4 (Super Premium Efficiency) _ IR3 (Rendimento Premium) Naturally cooled 1PC1 motors without external fan and fan cover with: _ IE1 (Standard Efficiency) _ IE2 (High Efficiency) _ IE3 (Premium Efficiency) _ IE4 (Super Premium Efficiency)
Marking	IEC 60034-30-1 IE1, IE2, IE3, IE4: 2, 4, 6 and 8-pole; NBR 17094-1: IR3 Rendimento Premium: 2, 4, 6, and 8-pole US Energy Independence Security Act EISA: 2, 4, 6 and 8-pole
Rated speed (synchronous speed)	750 ... 3000 rpm
Rated torque	0.6 ... 1978 Nm (1LE1/1LE5 motor series)
Insulation of the stator winding in accordance with EN 60034-1 (IEC 60034-1)	Temperature class 155 (F), utilized acc. to temperature class 130 (B) (also for motors with increased power) DURIGNIT IR 2000 insulation system
Degree of protection according to EN 60034-5 (IEC 60034-5)	IP55 as standard
Cooling according to EN 60034-6 (IEC 60034-6)	_ Self-ventilated (IC411) (1LE1/1LE5 motor series) frame size 80 M to 315 L _ Forced-air cooled (IC418) (1LE1/1LE5 motor series with order code **F90**), frame size 80 M to 200 L _ Naturally cooled (IC410) (1PC1 motor series) frame size 100 L to 160 L
Permissible coolant temperature and installation altitude	−20 ... +40 °C as standard, installation altitude up to 1000 m above sea level. See "Coolant temperature and installation altitude" in Catalog Section 1 "Introduction".
Standard voltages according to EN 60038 (IEC 60038)	50 Hz: 230 V, 400 V, 500 V, 690 V The voltage to be used can be found in the "Selection and ordering data" for the required motor.
Type of construction according to EN 60034-7 (IEC 60034-7)	_ Without flange: IM B3, IM B6, IM B7, IM B8, IM V5 without protective cover, IM V6, IM V5 with protective cover _ With flange: IM B5, IM V1, IM V3, IM B35 _ With flange (next largest): IM B14, IM V19, IM V18, IM B34
Paint finish Suitability of paint finish for climate group according to IEC 60721, Part 2-1	Standard: Color RAL 7030 stone gray See "Paint finish" in Catalog Section 1 "Introduction".
Vibration severity grade according to EN 60034-14 (IEC 60034-14)	Grade A (normal – without special vibration requirements) Optionally: Grade B (with special vibration requirements) See "Balance and vibration severity" in Catalog Section 1 "Introduction".
Shaft extension according to DIN 748 (IEC 60072)	Balancing type: half-key balancing as standard See "Balance and vibration severity" in Catalog Section 1 "Introduction".
Sound pressure level according to EN ISO 1680 (tolerance +3 dB)	The corresponding sound pressure level is listed in the selection and ordering data for the required motor.
Weights	The corresponding weight is listed in the selection and ordering data for the required motor.
Modular mounting concept	Rotary pulse encoder, brake, separately driven fan or prepared for mountings
Consistent series concept	_ Cast housing feet, screwed-on feet available as an option and retrofittable _ Terminal box obliquely partitioned and rotatable through 4 × 90° _ Bearings at DE and NDE are of identical design, reinforced bearings available as an option
Options	See "Article No. supplements and special versions"

© Innomotics 2024

More information

For further information, please get in touch with your local Siemens contact and use the SPC.

Contacts: Innomotics.com/hub/de/contact/map

SPCr: configurator.innomotics.com

Wherever possible, you will find a local contact for:

_ Technical support
_ Spare parts/repairs
_ Service
_ Training
_ Sales
_ Technical consultation/engineering

You start by selecting a:

3

_ country,
_ product or
_ sector.

By further specifying the remaining criteria you will find exactly the right contact partner with his/her respective expertise.

© Innomotics 2024

Overview

Converter operation up to 480 V +10 % line voltage

See Chapter 1, page 1/31.

During installation, the EMC guidelines must be complied with

Note:

When motors are operated on SINAMICS converters additional losses occur which, depending on the admissible winding temperature, can make it necessary to reduce the torque. The admissible torque values can be obtained from the SIZER (www.siemens.com/sizer) configuring tool. The lowest frequency specified there is 5 Hz. For stationary converter operation at lower frequencies, particularly in the case of frame sizes < 100, it is necessary to inquire at the Quotation Center.

Benefits

Motors operating with frequency converters offer the user numerous advantages.

The motors feature the future-oriented insulation system DURIGNIT IR 2000 (IR = Inverter Resistant). The DURIGNIT IR 2000 insulation system consists of high-quality enamel wires and insulating sheet materials in conjunction with temperature-resistant resin impregnation.

Application

The wide field of implementation includes the following applications:

- Conveyor systems such as cranes, belts and lifting gear
- High-bay warehouses
- Packaging machines
- Automation and drives

Their large range of line voltages enables them to be used all over the world.

Technical specifications

General note

All the data listed in the catalog is applicable for a 50 Hz line supply. With converter operation, the torque reduction factors for constant torque and drives for fans, pumps and compressors must be configured using the "SIZER for Siemens Drives" engineering tool. Higher noise levels must be expected at frequencies other than 50 Hz for motors operating with converters due to the harmonic content of the supply.

Mechanical limit speeds

When the motor is operated above its rated frequency, it is important to note that the maximum speeds are limited by the limits for the roller bearings, critical rotor speed and rigidity of the rotating parts (see page 1/66).

Motor protection

A motor protection function can be implemented using the I^2t sensing capability implemented in the converter software.

If required, more precise motor protection can be afforded by direct temperature measurement using PTC thermistors, or Pt1000 resistance thermometers in the motor winding. Some converters from Siemens determine the motor temperature using the resistance of the temperature sensor. They can be set to a required temperature for alarm and tripping.

Insulation

The insulation of 1LE motors is designed such that converter operation is possible at voltages up to 480 V[1]. $\hat{U}_{\text{phase-to-phase}} \leq 1500$ V, $\hat{U}_{\text{phase-to-ground}} \leq 1100$ V, voltage rise times of $t_s > 0.1$ µs.

For converter operation with the power ratings specified in the catalog, the motors are used according to temperature class 155 (F), i.e. in this case neither a service factor > 1 nor an increased coolant temperature is possible (order codes N01, N02 and N03 cannot be ordered).

[1] See also IEC 60034-1 Edition 13.0

© Innomotics 2024

Innomotics GP and Innomotics SD standard motors

Article number code

Selection and ordering data

The article number consists of a combination of digits and letters and is divided into three hyphenated blocks to provide a better overview, e.g.:
1LE1001-1DB22-2CB5-Z
H00

The first block (positions 1 to 7) identifies the motor type. The second block (positions 8 to 12) defines the motor frame size and length, the number of poles and power and in some cases the frequency/voltage. In the third block (positions 13 to 16), the frequency/voltage, type of construction and further design features are encoded.

For deviations in the second and third block from the catalog codes either **Z** or **90** should be used as appropriate.

Ordering data:

- Complete Article No. and order code(s) or plain text
- If a quotation has been requested, please specify the quotation number in addition to the Article No.
- When ordering a complete motor as a spare part, please specify the works serial No. for the previously supplied motor as well as the Article No.

Structure of the Article No.:	Position: 1	2	3	4	5	6	7	-	8	9	10	11	12	-	13	14	15	16		
1st to 4th position: Digit, letter, letter, digit																				
_ Self-ventilated by fan mounted on and driven by the rotor	**1**	**L**	**E**	**1**																
_ Forced-air cooled by air flow from the fan to be driven with option extension **F90**																				
_ ABNT Line – self-ventilated or forced-air cooled as for **1LE1**	**1**	**L**	**E**	**5**																
_ Naturally cooled without external fan and fan cover	**1**	**P**	**C**	**1**																
5th position: Digit																				
Aluminum housing					**0**															
Cast-iron housing Basic Line					**5**															
Cast-iron housing Performance Line					**6**															
Cast-iron housing ABNT Line IR3 (IE3)					**7**															
6th to 7th position: 2 digits																				
Motors with IE2 High Efficiency						**0**	**1**													
APAC Line motors with IE2 High Efficiency						**4**	**1**													
Motors with IE1 Standard Efficiency						**0**	**2**													
Motors with IE3 Premium Efficiency						**0**	**3**													
Motors with IE3 Premium Efficiency (converter operation)						**8**	**3**													
APAC Line motors with IE3 Premium Efficiency						**4**	**3**													
Motors with IE4 Super Premium Efficiency						**0**	**4**													
Pole-changing motors with one winding connected in Dahlander circuit						**1**	**1**													
Pole-changing motors with two windings						**1**	**2**													
NEMA Energy Efficient MG1 motors, Table 12-11 – Eagle Line						**2**	**1**													
NEMA Premium Efficient MG1 motors, Table 12-12 – Eagle Line						**2**	**3**													
ABNT Line IR3 (IE3) motors						**7**	**3**													
8th, 9th and 11th position: Digit, letter, digit									**0 … 3**	**A … E**		**0 … 8**								
Motor frame size (frame size as a combination of shaft height and overall length, encoded)																				
10th position: Letter																				
No. of poles A: 2-pole, B: 4-pole, C: 6-pole, D: 8-pole, J: 4/2-pole const. load torque, L: 8/4-pole const. load torque, P: 4/2-pole square-law load torque, Q: 6/4-pole square-law load torque, R: 8/4-pole square-law load torque											**A … R**									
12th and 13th position: 2 digits																				
Voltage, circuit and frequency (encoded with two digits, 9-0 requires order code M.. (e.g. M1Y))													**0 … 9**		**0 … 8**					
14th position: Letter																				
Type of construction (encoded with A … Z; Z requires order code Q.. (e.g. H00))																**A … V**				
15th position: Letter																				
Motor protection (encoded with A … Z; Z requires order code Q.. (e.g. Q2A))																	**A … Z**			
16th position: Digit																				
Terminal box position 4: Terminal box top, 5: Terminal box right, 6: Terminal box left, 7: Terminal box bottom																		**4 … 7**		
Special order versions: encoded – additional order code required; not encoded – additional plain text required																			**-**	**Z**

Ordering example

Selection criteria	Requirement	Structure of the Article No.
Motor type 1LE1	Standard motor with IE3 High Efficiency, IP55 degree of protection, aluminum housing	**1LE1003-■■■■-■■■■**
Motor frame size/No. of poles/Speed	160 M/4-pole/1500 rpm	**1LE1003-1DB2■-■■■■**
Rated power	11 kW	
Voltage and frequency	230 VΔ/400 VY, 50 Hz	**1LE1003-1DB22-2■■■**
Type of construction with special version	IM V5 with protective cover [1]	**1LE1003-1DB22-2C■■-Z H00**
Motor protection	1 or 3 PTC thermistors – for tripping (2 terminals)	**1LE1003-1DB22-2CB■-Z H00**
Terminal box position	Terminal box right (viewed from DE)	**1LE1003-1DB22-2CB5-Z H00**

[1] Standard without protective cover – the protective cover is defined with order code **H00** and must be ordered in addition to the Article No. with **-Z** and this order code.

© Innomotics 2024

Selection and ordering data

P_{rated}, 50 Hz/ P50 kW	P_{rated}, 60 Hz/ P60 kW	Frame size FS	Operating values at rated power n_{rated}, 50 Hz rpm	T_{rated}, 50 Hz Nm	η_{rated}, 50 Hz, 4/4 %	η_{rated}, 50 Hz, 3/4 %	η_{rated}, 50 Hz, 2/4 %	$\cos\varphi_{rated}$, 50 Hz, 4/4	I_{rated}, 50 Hz, 400 V A	T_{LR}/T_{rated}, 50 Hz	I_{LR}/I_{rated}, 50 Hz	T_B/T_{rated}, 50 Hz	L_{pfA}, 50 Hz dB(A)	L_{WA}, 50 Hz dB(A)	Aluminum series 1LE1004 Article No.	$m_{IM\,B3}$ kg	J kgm²
_ Cooling: Self-ventilated (IC411) or with order code F90 forced-air cooled without external fan and fan cover (IC418)																	
_ Efficiency according to IEC 60034-30-1: IE4 Super Premium Efficiency, service factor (SF) 1.15																	
_ Insulation: Thermal class 155 (temperature class F), IP55 degree of protection, utilization in accordance with thermal class 130 (temperature class B)																	
2-pole: 3000 rpm at 50 Hz, 3600 rpm at 60 Hz [1]																	
3	**3.45**	**100 L**	2920	9.8	89.1	89.8	89.4	0.86	5.7	3.7	9	4.9	62	74	**1LE1004-1AA4** ■-■■■■	26	0.0054
4	**4.55**	**112 M**	2950	12.9	90	90.4	89.7	0.89	7.2	2.6	8.8	4.1	68	80	**1LE1004-1BA2** ■-■■■■	34	0.012
5.5	**6.3**	**132 S**	2960	17.7	90.9	90.9	89.8	0.84	10.4	2.1	8.6	4.6	67	84	**1LE1004-1CA0** ■-■■■■	43	0.024
7.5	**8.6**	**132 S**	2955	24	91.7	92.4	92.2	0.91	13	2.2	8.6	4.3	67	80	**1LE1004-1CA1** ■-■■■■	55	0.031
11	**12.6**	**160 M**	2955	35.5	92.6	92.8	92	0.9	19.1	2.8	8.6	4.2	74	87	**1LE1004-1DA2** ■-■■■■	84	0.061
15	**17.3**	**160 M**	2955	48.5	93.3	93.5	92.9	0.9	26	3.1	9	4.5	74	87	**1LE1004-1DA3** ■-■■■■	94	0.068
18.5	**21.3**	**160 L**	2955	60	93.7	94.1	93.8	0.91	31.5	3.1	8.9	4.3	74	87	**1LE1004-1DA4** ■-■■■■	120	0.073
22	**24.5**	**180 M**	2950	71	94	94.4	94.1	0.89	38	2.8	8.9	4.3	71	84	**1LE1004-1EA2** ■-■■■■	139	0.091
30	**33.5**	**200 L**	2955	97	94.5	94.8	94.4	0.85	54	2.8	7.9	4	69	83	**1LE1004-2AA4** ■-■■■■	173	0.14
37	**41.5**	**200 L**	2955	120	94.8	95.1	94.9	0.88	64	2.9	7.8	4	69	83	**1LE1004-2AA5** ■-■■■■	214	0.19
4-pole: 1500 rpm at 50 Hz, 1800 rpm at 60 Hz [1]																	
2.2	**2.55**	**100 L**	1465	14.3	89.5	89.6	88.3	0.79	4.5	3.3	8.5	4.7	59	71	**1LE1004-1AB4** ■-■■■■	30	0.014
3	**3.45**	**100 L**	1460	19.6	90.4	91	90.5	0.81	5.9	3.5	8.8	4.2	59	71	**1LE1004-1AB5** ■-■■■■	42	0.016
4	**4.55**	**112 M**	1465	26	91.1	91.6	91	0.81	7.8	3.1	8.3	4.3	63	75	**1LE1004-1BB2** ■-■■■■	49	0.02
5.5	**6.3**	**132 S**	1470	35.5	91.9	92.5	92.3	0.83	10.4	2.6	8.3	3.5	56	68	**1LE1004-1CB0** ■-■■■■	54	0.034
7.5	**8.6**	**132 M**	1470	48.5	92.6	93.1	92.7	0.81	14.4	3	7.7	4	56	68	**1LE1004-1CB2** ■-■■■■	64	0.046
11	**12.6**	**160 M**	1480	71	93.3	93.4	92.5	0.82	20.5	2.9	8.1	4.1	63	76	**1LE1004-1DB2** ■-■■■■	100	0.085
15	**17.3**	**160 L**	1480	97	93.9	94	93.3	0.8	29	3.7	7.8	4.3	63	76	**1LE1004-1DB4** ■-■■■■	111	0.099
18.5	**21.3**	**180 M**	1470	120	94.2	94.7	94.5	0.81	35	2.7	7.9	3.6	59	72	**1LE1004-1EB2** ■-■■■■	153	0.17
22	**25.3**	**180 L**	1475	142	94.5	95	94.8	0.81	41.5	2.9	7.7	3.8	59	72	**1LE1004-1EB4** ■-■■■■	158	0.18
30	**34.5**	**200 L**	1475	194	94.9	95.2	94.9	0.81	56	3.2	7.3	3.6	60	73	**1LE1004-2AB5** ■-■■■■	205	0.27

		Version		Order code
Voltages				
Frame sizes 100 L to 200 L: Use of the 4 x 90° rotatable terminal box				
50 Hz 230 VΔ/400 VY	60 Hz [1] 460 VY	**Standard**	**2 2**	–
50 Hz 400 VΔ/690 VY	60 Hz [1] 460 VΔ	**Standard**	**3 4**	–
For other voltages [1] and more information, see from page 3/101			**9 0**	**...**
Types of construction		Version		Order code
Without flange	IM B3 [2]	**Standard**	**A**	–
With flange	IM B5 [2]	With additional charge	**F**	–
With flange	IM B14 [2]	With additional charge	**K**	–
For other types of construction and more information, see from page 3/107			■	**...**
Motor protection		Version		Order code
Frame sizes 100 L to 200 L: Use of the 4 x 90° rotatable terminal box				
Without		**Standard**	**A**	–
PTC thermistor with 3 temperature sensors		With additional charge	**B**	–
For other motor protection and more information, see from page 3/120			■	**...**
Terminal box position		Version		
Terminal box at top		**Standard**	**4**	
For other terminal box positions and more information, see from page 3/123			■	
Special versions				Order code(s)
Forced-air cooled motors w/o ext. fan/fan cover (IC418)			**1LE1004- .... ■-■■■■ -Z**	**F90 +w...+...+...**
For options, see from page 3/126			**1LE1004- .... ■-■■■■ -Z**	**...+...+...+...**

[1] Operating values at rated power for 60 Hz are stored in the SPC.

[2] Types derived from IM B3 (IM B6/7/8, IM V6, and IM V5), from IM B5 (IM V3 and IM V1) and from IM B14 (IM V19 and IM V18) are possible, provided that no requirements exist for condensation drainage holes (**H03**) or stamping of the type on the rating plate. The basic type IM B3, IM B5, or IM B14 is stamped as standard on the rating plate. For orders with condensation drainage holes (**H03**), the type must be specified.

© Innomotics 2024

Cast-iron series Innomotics SD 1LE1504 Basic Line – self-ventilated or forced-air cooled

Selection and ordering data

P_{rated}, 50 Hz/ P50 kW	P_{rated}, 60 Hz/ P60 kW	Frame size FS	Operating values at rated power n_{rated}, 50 Hz rpm	T_{rated}, 50 Hz Nm	η_{rated}, 50 Hz, 4/4 %	η_{rated}, 50 Hz, 3/4 %	η_{rated}, 50 Hz, 2/4 %	$\cos\varphi_{rated}$, 50 Hz, 4/4	I_{rated}, 50 Hz, 400 V A	T_{LR}/T_{rated}, 50 Hz	I_{LR}/I_{rated}, 50 Hz	T_B/T_{rated}, 50 Hz	L_{pfA}, 50 Hz dB(A)	L_{WA}, 50 Hz dB(A)	Cast-iron series 1LE1504 – *Basic Line* Article No.	$m_{IM\,B3}$ kg	J kgm²
_ Cooling: Self-ventilated (IC411) or with order code F90 forced-air cooled without external fan and fan cover (IC418)																	
_ Efficiency according to IEC 60034-30-1: IE4 Super Premium Efficiency, service factor (SF) 1.15																	
_ Insulation: Thermal class 155 (temperature class F), IP55 degree of protection, utilization in accordance with thermal class 130 (temperature class B)																	
2-pole: 3000 rpm at 50 Hz, 3600 rpm at 60 Hz																	
3	**3.45**	**100 L**	2920	9.8	89.1	89.8	89.4	0.86	5.7	3.7	9	4.9	62	74	**1LE1504-1AA4** ■-■■■■	37	0.0054
4	**4.55**	**112 M**	2950	12.9	90	90.4	89.7	0.89	7.2	2.6	8.8	4.1	68	80	**1LE1504-1BA2** ■-■■■■	43	0.012
5.5	**6.3**	**132 S**	2960	17.7	90.9	90.9	89.8	0.84	10.4	2.1	8.6	4.6	67	84	**1LE1504-1CA0** ■-■■■■	50	0.024
7.5	**8.6**	**132 S**	2955	24	91.7	92.4	92.2	0.91	13	2.2	8.6	4.3	67	80	**1LE1504-1CA1** ■-■■■■	75	0.031
11	**12.6**	**160 M**	2955	35.5	92.6	92.8	92	0.9	19.1	2.8	8.6	4.2	74	87	**1LE1504-1DA2** ■-■■■■	111	0.061
15	**17.3**	**160 M**	2955	48.5	93.3	93.5	92.9	0.9	26	3.1	9	4.5	74	87	**1LE1504-1DA3** ■-■■■■	130	0.068
18.5	**21.3**	**160 L**	2955	60	93.7	94.1	93.8	0.91	31.5	3.1	8.9	4.3	74	87	**1LE1504-1DA4** ■-■■■■	131	0.073
22	**24.5**	**180 M**	2950	71	94	94.4	94.1	0.89	38	2.8	8.9	4.3	71	84	**1LE1504-1EA2** ■-■■■■	175	0.091
30	**33.5**	**200 L**	2955	97	94.5	94.8	94.4	0.85	54	2.8	7.9	4	69	83	**1LE1504-2AA4** ■-■■■■	220	0.14
37	**41.5**	**200 L**	2955	120	94.8	95.1	94.9	0.88	64	2.9	7.8	4	69	83	**1LE1504-2AA5** ■-■■■■	265	0.19
45	**51**	**225 M**	2970	145	95	95	94.4	0.85	80	3.1	8.8	4.1	73	86	**1LE1504-2BA2** ■-■■■■	330	0.26

Voltages [2]		Version					Order code
50 Hz 230 VΔ/400 VY	60 Hz [1] 460 VY	**Standard**	**2**	**2**			–
50 Hz 400 VΔ/690 VY	60 Hz [1] 460 VΔ	**Standard**	**3**	**4**			–
For other voltages and more information, see from page 3/104			**9**	**0**			**...**
Types of construction		Version					Order code
Without flange	IM B3 [3]	**Standard**		**A**			–
With flange	IM B5 [3]	With additional charge		**F**			–
With flange	IM B5 [3]	With additional charge		**K**			–
For other types of construction and more information, see from page 3/111				■			**...**
Motor protection		Version					Order code
Without		**Standard**			**A**		–
PTC thermistor with 3 temperature sensors		With additional charge			**B**		–
For other motor protection and more information, see from page 3/121					■		**...**
Terminal box position		Version					
Terminal box at top		**Standard**				**4**	
For other terminal box positions and more information, see from page 3/124						■	
Special versions							Order code(s)
Forced-air cooled motors w/o ext. fan/fan cover (IC418)		**1LE1504-....** ■-■■■■				**-Z**	**F90 +...+...+...**
For options, see from page 3/132		**1LE1504-....** ■-■■■■				**-Z**	**...+...+...+...**

Note:
Further IE4 motors are available as standard Innomotics SD (1LE5) next generation motors, see page 4/9.

[1] Operating values at rated power for 60 Hz are stored in the SPC.
[2] Parallel supply lines are required in the case of connection to ≤ 240 V. For frame size 315 with connection to ≤ 240 V, due to the high current, a drilled, removable entry plate (order code **R52**) or a larger terminal box (order code **R50**) can be used. Order codes **R52** and **R50** alter the motor dimensions.
[3] Types derived from IM B3 (IM B6/7/8, IM V6 and IM V5), from IM B5 (IM V3 and IM V1) and from IM B14 (IM V19 and IM V18) are possible, provided that no requirement exists for stamping of the type on the rating plate. The basic type IM B3, IM B5, or IM B14 is stamped as standard on the rating plate. If mounted in a different position, the position must be specified to ensure that the condensation drainage holes are positioned correctly.

© Innomotics 2024

Selection and ordering data

P_{rated}, 50 Hz/ P50	P_{rated}, 60 Hz/ P60	Frame size	Operating values at rated power n_{rated}, 50 Hz	T_{rated}, 50 Hz	Different IE class 60 Hz/P60	η_{rated}, 50 Hz, 4/4	η_{rated}, 50 Hz, 3/4	η_{rated}, 50 Hz, 2/4	$\cos\varphi_{rated}$, 50 Hz, 4/4	I_{rated}, 50 Hz, 400 V	T_{LR}/T_{rated}, 50 Hz	I_{LR}/I_{rated}, 50 Hz	T_B/T_{rated}, 50 Hz	L_{pfA}, 50 Hz	L_{WA}, 50 Hz	Cast-iron series 1LE1504 – *Basic Line* Article No.		$m_{IM\ B3}$	J
kW	kW	FS	rpm	Nm		%	%	%		A				dB(A)	dB(A)			kg	kgm²
_ Cooling: Self-ventilated (IC411) or with order code F90 forced-air cooled without external fan and fan cover (IC418)																			
_ Efficiency according to IEC 60034-30-1: IE4 Super Premium Efficiency, service factor (SF) 1.15																			
_ Insulation: Thermal class 155 (temperature class F), IP55 degree of protection, utilization in accordance with thermal class 130 (temperature class B)																			
4-pole: 1500 rpm at 50 Hz, 1800 rpm at 60 Hz																			
2.2	**2.55**	**100 L**	1465	14.3		89.5	89.6	88.3	0.79	4.5	3.3	8.5	4.7	59	71	**1LE1504-1AB4**	■-■■■■	40	0.014
3	**3.45**	**100 L**	1460	19.6		90.4	91	90.5	0.81	5.9	3.5	8.8	4.2	59	71	**1LE1504-1AB5**	■-■■■■	52	0.016
4	**4.55**	**112 M**	1465	26		91.1	91.6	91	0.81	7.8	3.1	8.3	4.3	63	75	**1LE1504-1BB2**	■-■■■■	60	0.02
5.5	**6.3**	**132 S**	1470	35.5		91.9	92.5	92.3	0.83	10.4	2.6	8.3	3.5	56	68	**1LE1504-1CB0**	■-■■■■	84	0.034
7.5	**8.6**	**132 M**	1470	48.5		92.6	93.1	92.7	0.81	14.4	3	7.7	4	56	68	**1LE1504-1CB2**	■-■■■■	82	0.046
11	**12.6**	**160 M**	1480	71		93.3	93.4	92.5	0.82	20.5	2.9	8.1	4.1	63	76	**1LE1504-1DB2**	■-■■■■	127	0.085
15	**17.3**	**160 L**	1480	97		93.9	94	93.3	0.8	29	3.7	7.8	4.3	63	76	**1LE1504-1DB4**	■-■■■■	137	0.099
18.5	**21.3**	**180 M**	1470	120		94.2	94.7	94.5	0.81	35	2.7	7.9	3.6	59	72	**1LE1504-1EB2**	■-■■■■	187	0.17
22	**25.3**	**180 L**	1475	142		94.5	95	94.8	0.81	41.5	2.9	7.7	3.8	59	72	**1LE1504-1EB4**	■-■■■■	192	0.18
30	**34.5**	**200 L**	1475	194		94.9	95.2	94.9	0.81	56	3.2	7.3	3.6	60	73	**1LE1504-2AB5**	■-■■■■	258	0.27
37	**42.5**	**225 S**	1485	240		95.2	95.5	95.2	0.84	67	3.2	8.4	3.2	69	83	**1LE1504-2BB0**	■-■■■■	345	0.52
45	**52**	**225 M**	1485	290	IE3	95.4	95.7	95.4	0.84	81	3.4	8	3.3	69	83	**1LE1504-2BB2**	■-■■■■	415	0.66

Voltages [2]		Versionw				Order code
50 Hz 230 VΔ/400 VY	60 Hz [1] 460 VY	**Standard**	**2**	**2**		–
50 Hz 400 VΔ/690 VY	60 Hz [1] 460 VΔ	**Standard**	**3**	**4**		–
For other voltages and more information, see from page 3/104			**9**	**0**		**...**
Types of construction		Version				Order code
Without flange	IM B3 [3]	**Standard**			**A**	–
With flange	IM B5 [3]	With additional charge			**F**	–
With flange	IM B5 [3]	With additional charge			**K**	–
For other types of construction and more information, see from page 3/111					■	**...**
Motor protection		Version				Order code
Without		**Standard**			**A**	–
PTC thermistor with 3 temperature sensors		With additional charge			**B**	–
For other motor protection and more information, see from page 3/121					■	**...**
Terminal box position		Version				
Terminal box at top		**Standard**			**4**	
For other terminal box positions and more information, see from page 3/124					■	
Special versions						Order code(s)
Forced-air cooled motors w/o ext. fan/fan cover (IC418)		**1LE1504-....**	■-■■■■		**-Z**	**F90 +...+...+...**
For options, see from page 3/132		**1LE1504-....**	■-■■■■		**-Z**	**...+...+...+...**

Note:
Further IE4 motors are available as standard Innomotics SD (1LE5) next generation motors, see page 4/9.

[1] Operating values at rated power for 60 Hz are stored in the SPC.
[2] Parallel supply lines are required in the case of connection to ≤ 240 V.
For frame size 315 with connection to ≤ 240 V, due to the high current, a drilled, removable entry plate (order code **R52**) or a larger terminal box (order code **R50**) can be used. Order codes **R52** and **R50** alter the motor dimensions.

[3] Types derived from IM B3 (IM B6/7/8, IM V6 and IM V5), from IM B5 (IM V3 and IM V1) and from IM B14 (IM V19 and IM V18) are possible, provided that no requirement exists for stamping of the type on the rating plate. The basic type IM B3, IM B5, or IM B14 is stamped as standard on the rating plate. If mounted in a different position, the position must be specified to ensure that the condensation drainage holes are positioned correctly.

© Innomotics 2024

Cast-iron series Innomotics SD 1LE1604 Performance Line – self-ventilated or forced-air cooled

Selection and ordering data

P_{rated}, 50 Hz/ P50 kW	P_{rated}, 60 Hz/ P60 kW	Frame size FS	Operating values at rated power n_{rated}, 50 Hz rpm	T_{rated}, 50 Hz Nm	η_{rated}, 50 Hz, 4/4 %	η_{rated}, 50 Hz, 3/4 %	η_{rated}, 50 Hz, 2/4 %	$\cos\varphi_{rated}$, 50 Hz, 4/4	I_{rated}, 50 Hz, 400 V A	T_{LR}/T_{rated}, 50 Hz	I_{LR}/I_{rated}, 50 Hz	T_B/T_{rated}, 50 Hz	L_{pfA}, 50 Hz dB(A)	L_{WA}, 50 Hz dB(A)	Cast-iron series 1LE1604 – *Performance Line* Article No.	$m_{IM\,B3}$ kg	J kgm²
_ Cooling: Self-ventilated (IC411) or with order code F90 forced-air cooled without external fan and fan cover (IC418)																	
_ Efficiency according to IEC 60034-30-1: IE4 Super Premium Efficiency, service factor (SF) 1.15																	
_ Insulation: Thermal class 155 (temperature class F), IP55 degree of protection, utilization in accordance with thermal class 130 (temperature class B)																	
2-pole: 3000 rpm at 50 Hz, 3600 rpm at 60 Hz																	
3	**3.45**	**100 L**	2920	9.8	89.1	89.8	89.4	0.86	5.7	3.7	9	4.9	62	74	**1LE1604-1AA4** ■-■■■■	37	0.0054
4	**4.55**	**112 M**	2950	12.9	90	90.4	89.7	0.89	7.2	2.6	8.8	4.1	68	80	**1LE1604-1BA2** ■-■■■■	43	0.012
5.5	**6.3**	**132 S**	2960	17.7	90.9	90.9	89.8	0.84	10.4	2.1	8.6	4.6	67	84	**1LE1604-1CA0** ■-■■■■	50	0.024
7.5	**8.6**	**132 S**	2955	24	91.7	92.4	92.2	0.91	13	2.2	8.6	4.3	67	80	**1LE1604-1CA1** ■-■■■■	75	0.031
11	**12.6**	**160 M**	2955	35.5	92.6	92.8	92	0.9	19.1	2.8	8.6	4.2	74	87	**1LE1604-1DA2** ■-■■■■	111	0.061
15	**17.3**	**160 M**	2955	48.5	93.3	93.5	92.9	0.9	26	3.1	9	4.5	74	87	**1LE1604-1DA3** ■-■■■■	130	0.068
18.5	**21.3**	**160 L**	2955	60	93.7	94.1	93.8	0.91	31.5	3.1	8.9	4.3	74	87	**1LE1604-1DA4** ■-■■■■	131	0.073
22	**24.5**	**180 M**	2950	71	94	94.4	94.1	0.89	38	2.8	8.9	4.3	71	84	**1LE1604-1EA2** ■-■■■■	175	0.091
30	**33.5**	**200 L**	2955	97	94.5	94.8	94.4	0.85	54	2.8	7.9	4	69	83	**1LE1604-2AA4** ■-■■■■	220	0.14
37	**41.5**	**200 L**	2955	120	94.8	95.1	94.9	0.88	64	2.9	7.8	4	69	83	**1LE1604-2AA5** ■-■■■■	265	0.19
45	**51**	**225 M**	2970	145	95	95	94.4	0.85	80	3.1	8.8	4.1	73	86	**1LE1604-2BA2** ■-■■■■	330	0.26

Voltages [2]		Version						Order code
50 Hz 230 VΔ/400 VY	60 Hz [1] 460 VY	**Standard**	**2**	**2**				–
50 Hz 400 VΔ/690 VY	60 Hz [1] 460 VΔ	**Standard**	**3**	**4**				–
For other voltages and more information, see from page 3/104			**9**	**0**				**...**
Types of construction		Version						Order code
Without flange	IM B3 [3]	**Standard**			**A**			–
With flange	IM B5 [3]	With additional charge			**F**			–
With flange	IM B5 [3]	With additional charge			**K**			–
For other types of construction and more information, see from page 3/111					■			**...**
Motor protection		Version						Order code
PTC thermistor with 3 temperature sensors		**Standard**				**B**		–
For other motor protection and more information, see from page 3/121						■		**...**
Terminal box position		Version						
Terminal box at top		**Standard**					**4**	
For other terminal box positions and more information, see from page 3/124							■	

Special versions			Order code(s)
Forced-air cooled motors w/o ext. fan/fan cover (IC418)	**1LE1604- ....**	■-■■■■ -Z	**F90 +...+...+...**
For options, see from page 3/132	**1LE1604- ....**	■-■■■■ -Z	**...+...+...+...**

Note:
Further IE4 motors are available as standard Innomotics SD (1LE5) next generation motors, see page 4/10.

[1] Operating values at rated power for 60 Hz are stored in the SPC.
[2] Parallel supply lines are required in the case of connection to ≤ 240 V.
For frame size 315 with connection to ≤ 240 V, due to the high current, a drilled, removable entry plate (order code **R52**) or a larger terminal box (order code **R50**) can be used. Order codes **R52** and **R50** alter the motor dimensions.

[3] Types derived from IM B3 (IM B6/7/8, IM V6 and IM V5), from IM B5 (IM V3 and IM V1) and from IM B14 (IM V19 and IM V18) are possible, provided that no requirement exists for stamping of the type on the rating plate. The basic type IM B3, IM B5, or IM B14 is stamped as standard on the rating plate. If mounted in a different position, the position must be specified to ensure that the condensation drainage holes are positioned correctly.

© Innomotics 2024

Selection and ordering data

P_{rated}, 50 Hz/ P50 kW	P_{rated}, 60 Hz/ P60 kW	Frame size FS	Operating values at rated power n_{rated}, 50 Hz rpm	T_{rated}, 50 Hz Nm	Different IE class 60 Hz/P60	η_{rated}, 50 Hz, 4/4 %	η_{rated}, 50 Hz, 3/4 %	η_{rated}, 50 Hz, 2/4 %	$\cos\varphi_{rated}$, 50 Hz, 4/4	I_{rated}, 50 Hz, 400 V A	T_{LR}/T_{rated}, 50 Hz	I_{LR}/I_{rated}, 50 Hz	T_B/T_{rated}, 50 Hz	L_{pfA}, 50 Hz dB(A)	L_{WA}, 50 Hz dB(A)	Cast-iron series 1LE1604 – *Performance Line* Article No.	$m_{IM\,B3}$ kg	J kgm²
_ Cooling: Self-ventilated (IC411) or with order code F90 forced-air cooled without external fan and fan cover (IC418)																		
_ Efficiency according to IEC 60034-30-1: IE4 Super Premium Efficiency, service factor (SF) 1.15																		
_ Insulation: Thermal class 155 (temperature class F), IP55 degree of protection, utilization in accordance with thermal class 130 (temperature class B)																		
4-pole: 1500 rpm at 50 Hz, 1800 rpm at 60 Hz																		
2.2	**2.55**	**100 L**	1465	14.3		89.5	89.6	88.3	0.79	4.5	3.3	8.5	4.7	59	71	**1LE1604-1AB4** ■-■■■■	40	0.014
3	**3.45**	**100 L**	1460	19.6		90.4	91	90.5	0.81	5.9	3.5	8.8	4.2	59	71	**1LE1604-1AB5** ■-■■■■	52	0.016
4	**4.55**	**112 M**	1465	26		91.1	91.6	91	0.81	7.8	3.1	8.3	4.3	63	75	**1LE1604-1BB2** ■-■■■■	60	0.02
5.5	**6.3**	**132 S**	1470	35.5		91.9	92.5	92.3	0.83	10.4	2.6	8.3	3.5	56	68	**1LE1604-1CB0** ■-■■■■	84	0.034
7.5	**8.6**	**132 M**	1470	48.5		92.6	93.1	92.7	0.81	14.4	3	7.7	4	56	68	**1LE1604-1CB2** ■-■■■■	82	0.046
11	**12.6**	**160 M**	1480	71		93.3	93.4	92.5	0.82	20.5	2.9	8.1	4.1	63	76	**1LE1604-1DB2** ■-■■■■	127	0.085
15	**17.3**	**160 L**	1480	97		93.9	94	93.3	0.8	29	3.7	7.8	4.3	63	76	**1LE1604-1DB4** ■-■■■■	137	0.099
18.5	**21.3**	**180 M**	1470	120		94.2	94.7	94.5	0.81	35	2.7	7.9	3.6	59	72	**1LE1604-1EB2** ■-■■■■	187	0.17
22	**25.3**	**180 L**	1475	142		94.5	95	94.8	0.81	41.5	2.9	7.7	3.8	59	72	**1LE1604-1EB4** ■-■■■■	192	0.18
30	**34.5**	**200 L**	1475	194		94.9	95.2	94.9	0.81	56	3.2	7.3	3.6	60	73	**1LE1604-2AB5** ■-■■■■	258	0.27
37	**42.5**	**225 S**	1485	240		95.2	95.5	95.2	0.84	67	3.2	8.4	3.2	69	83	**1LE1604-2BB0** ■-■■■■	345	0.52
45	**52**	**225 M**	1485	290	IE3	95.4	95.7	95.4	0.84	81	3.4	8	3.3	69	83	**1LE1604-2BB2** ■-■■■■	415	0.66

Voltages [2]		Version						Order code
50 Hz 230 VΔ/400 VY	60 Hz [1] 460 VY	**Standard**	**2**	**2**				–
50 Hz 400 VΔ/690 VY	60 Hz [1] 460 VΔ	**Standard**	**3**	**4**				–
For other voltages and more information, see from page 3/104			**9**	**0**				**...**
Types of construction		Version						Order code
Without flange	IM B3 [3]	**Standard**			**A**			–
With flange	IM B5 [3]	With additional charge			**F**			–
With flange	IM B5 [3]	With additional charge			**K**			–
For other types of construction and more information, see from page 3/111					■			**...**
Motor protection		Version						Order code
PTC thermistor with 3 temperature sensors		**Standard**				**B**		–
For other motor protection and more information, see from page 3/121						■		**...**
Terminal box position		Version						
Terminal box at top		**Standard**					**4**	
For other terminal box positions and more information, see from page 3/124							■	
Special versions								Order code(s)
Forced-air cooled motors w/o ext. fan/fan cover (IC418)			**1LE1604-....** ■-■■■■ -Z					**F90 +...+...+...**
For options, see from page 3/132			**1LE1604-....** ■-■■■■ -Z					**...+...+...+...**

Note:
Further IE4 motors are available as standard Innomotics SD (1LE5) next generation motors, see page 4/10.

[1] Operating values at rated power for 60 Hz are stored in the SPC.
[2] Parallel supply lines are required in the case of connection to ≤ 240 V.
For frame size 315 with connection to ≤ 240 V, due to the high current, a drilled, removable entry plate (order code **R52**) or a larger terminal box (order code **R50**) can be used. Order codes **R52** and **R50** alter the motor dimensions.

[3] Types derived from IM B3 (IM B6/7/8, IM V6 and IM V5), from IM B5 (IM V3 and IM V1) and from IM B14 (IM V19 and IM V18) are possible, provided that no requirement exists for stamping of the type on the rating plate. The basic type IM B3, IM B5, or IM B14 is stamped as standard on the rating plate. If mounted in a different position, the position must be specified to ensure that the condensation drainage holes are positioned correctly.

© Innomotics 2024

Aluminum series Innomotics GP 1LE1003 – self-ventilated

Selection and ordering data

P_{rated}, 50 Hz/ P50 kW	P_{rated}, 60 Hz/ P60 [1] kW	Frame size FS	Operating values at rated power n_{rated}, 50 Hz rpm	T_{rated}, 50 Hz Nm	Different IE class 60 Hz/P60	η_{rated}, 50 Hz, 4/4 %	η_{rated}, 50 Hz, 3/4 %	η_{rated}, 50 Hz, 2/4 %	$\cos\varphi_{rated}$, 50 Hz, 4/4	I_{rated}, 50 Hz, 400 V A	T_{LR}/T_{rated}, 50 Hz	I_{LR}/I_{rated}, 50 Hz	T_B/T_{rated}, 50 Hz	L_{pfA}, 50 Hz dB(A)	L_{WA}, 50 Hz dB(A)	Aluminum series 1LE1003 Article No. ▲ New						$m_{IM\ B3}$ kg	J kgm²
_ Cooling: Self-ventilated (IC411) or with order code F90 forced-air cooled without external fan and fan cover (IC418)																							
_ Efficiency according to IEC 60034-30-1: IE3 Premium Efficiency, service factor (SF) 1.15																							
_ Insulation: Thermal class 155 (temperature class F), IP55 degree of protection, utilization in accordance with thermal class 130 (temperature class B)																							
2-pole: 3000 rpm at 50 Hz, 3600 rpm at 60 Hz [1]																							
0.18	**0.21**	**63 M**	2850	0.6		65.9	64.8	58.6	0.78	0.51	2.2	4.5	2.7	56	64	▲ **1LE1003-0BA2**	■	-	■	■	■	4	0.00022
0.25	**0.29**	**63 M**	2835	0.84		69.7	68.3	61.7	0.81	0.64	1.9	4.1	2.5	56	64	▲ **1LE1003-0BA3**	■	-	■	■	■	5	0.00026
0.37	**0.43**	**71 M**	2850	1.24		73.8	73.3	69.7	0.76	0.95	3.5	5.8	3.5	52	63	▲ **1LE1003-0CA2**	■	-	■	■	■	7	0.00045
0.55	**0.63**	**71 M**	2850	1.84		77.8	77.5	74.5	0.76	1.34	3.7	6.1	3.7	57	68	▲ **1LE1003-0CA3**	■	-	■	■	■	8	0.00056
0.75	**0.86**	**80 M**	2850	2.5		80.7	82.2	81.9	0.86	1.56	2.6	6.2	3	60	71	**1LE1003-0DA2**	■	-	■	■	■	12	0.0011
1.1	**1.27**	**80 M**	2885	3.65		82.7	83.9	83.1	0.85	2.25	3	7.1	3.3	60	71	**1LE1003-0DA3**	■	-	■	■	■	13	0.0013
1.5	**1.75**	**90 S**	2910	4.9		84.2	84.6	83.2	0.86	3	2.7	8.1	4.2	65	77	**1LE1003-0EA0**	■	-	■	■	■	16	0.0021
2.2	**2.55**	**90 L**	2910	7.2		85.9	86.8	86.1	0.88	4.2	2.6	8.3	4	65	77	**1LE1003-0EA4**	■	-	■	■	■	20	0.0031
3	**3.45**	**100 L**	2910	9.8		87.1	87.7	87	0.87	5.7	4.4	9.4	4.5	72	80	**1LE1003-1AA4**	■	-	■	■	■	25	0.0041
4	**4.55**	**112 M**	2945	13		88.1	88.8	87.9	0.89	7.4	2.6	9.1	3.6	73	81	**1LE1003-1BA2**	■	-	■	■	■	32	0.0079
5.5	**6.3**	**132 S**	2945	17.8		89.2	89.5	88.6	0.88	10.1	2.5	8.9	3.8	69	77	**1LE1003-1CA0**	■	-	■	■	■	48	0.0168
7.5	**8.6**	**132 S**	2950	24.5		90.1	91	91	0.92	13.1	1.9	8.3	3.9	68	80	**1LE1003-1CA1**	■	-	■	■	■	57	0.031
11	**12.6**	**160 M**	2945	35.5		91.2	91.4	90.6	0.89	19.6	2.5	8.3	3.5	77	85	**1LE1003-1DA2**	■	-	■	■	■	70	0.037
15	**17.3**	**160 M**	2955	48.5		91.9	91.9	90.8	0.86	27.5	3.5	10.2	4.4	77	85	**1LE1003-1DA3**	■	-	■	■	■	78	0.043
18.5	**21.3**	**160 L**	2955	60		92.4	92.8	92.4	0.9	32	2.8	9	4.2	70	82	**1LE1003-1DA4**	■	-	■	■	■	94	0.068
22	**24.5**	**180 M**	2950	71		92.7	93.2	92.9	0.89	38.5	2.3	7.5	3.5	67	80	**1LE1003-1EA2**	■	-	■	■	■	129	0.08
30	**33.5**	**200 L**	2955	97		93.3	93.5	92.9	0.87	53	2.5	7	3.3	67	80	**1LE1003-2AA4**	■	-	■	■	■	173	0.134
37	**41.5**	**200 L**	2955	120		93.7	94.2	94	0.88	65	2.5	7.1	3.2	67	80	**1LE1003-2AA5**	■	-	■	■	■	194	0.158

Voltages		Version					Order code
50 Hz 230 VΔ/400 VY	60 Hz[1] 460 VY	**Standard**	**2**	**2**			–
50 Hz 400 VΔ/690 VY	60 Hz[1] 460 VΔ	**Standard**	**3**	**4**			–
50 Hz 500 VY		Without additional charge	**2**	**7**			–
50 Hz 500 VΔ		Without additional charge	**4**	**0**			–
For other voltages [1] and more information, see from page 3/103			**9**	**0**			**...**
Types of construction		Version					Order code
Without flange	IM B3 [2]	**Standard**		**A**			–
With flange	IM B5 [2]	With additional charge		**F**			–
With flange	IM B14 [2]	With additional charge		**K**			–
For other types of construction and more information, see from page 3/107				■			**...**
Motor protection		Version					Order code
Without		**Standard**			**A**		–
PTC thermistor with 1 or 3 temperature sensors (frame sizes 80, 90 or 100 to 200)		With additional charge			**B**		–
For other motor protection and more information, see from page 3/120					■		**...**
Terminal box position		Version					
Terminal box at top		**Standard**				**4**	
For other terminal box positions and more information, see from page 3/123						■	
Special versions							Order code(s)
For options, see from page 3/126			**1LE1003-....**	■	-	■ ■ ■ ■ -Z	...+...+...+...

[1] Operating values at rated power for 60 Hz are stored in the SPC.

[2] Types derived from IM B3 (IM B6/7/8, IM V6, and IM V5), from IM B5 (IM V3 and IM V1) and from IM B14 (IM V19 and IM V18) are possible, provided that no requirements exist for condensation drainage holes (**H03**) or stamping of the type on the rating plate. The basic type IM B3, IM B5, or IM B14 is stamped as standard on the rating plate. For orders with condensation drainage holes (**H03**), the type must be specified.

© Innomotics 2024

Selection and ordering data

P_{rated}, 50 Hz/ P50	P_{rated}, 60 Hz/ P60 [1]	Frame size	Operating values at rated power n_{rated}, 50 Hz	T_{rated}, 50 Hz	Different IE class 60 Hz/P60	η_{rated}, 50 Hz, 4/4	η_{rated}, 50 Hz, 3/4	η_{rated}, 50 Hz, 2/4	$\cos\varphi_{rated}$, 50 Hz, 4/4	I_{rated}, 50 Hz, 400 V	T_{LR}/T_{rated}, 50 Hz	I_{LR}/I_{rated}, 50 Hz	T_B/T_{rated}, 50 Hz	L_{pfA}, 50 Hz	L_{WA}, 50 Hz	Aluminum series 1LE1003 Article No.	$m_{IM\ B3}$	J
kW	kW	FS	rpm	Nm		%	%	%		A				dB(A)	dB(A)	▲ New	kg	kgm²
_ Cooling: Self-ventilated (IC411) or with order code F90 forced-air cooled without external fan and fan cover (IC418)																		
_ Efficiency according to IEC 60034-30-1: IE3 Premium Efficiency, service factor (SF) 1.15																		
_ Insulation: Thermal class 155 (temperature class F), IP55 degree of protection, utilization in accordance with thermal class 130 (temperature class B)																		
4-pole: 1500 rpm at 50 Hz, 1800 rpm at 60 Hz [1]																		
0.12	**0.14**	**63 M**	1390	0.82		64.8	63.1	57.3	0.68	0.39	2.4	3.6	2.6	59	67	▲ **1LE1003-0BB2** ■-■■■■	5	0.00045
0.18	**0.21**	**63 M**	1400	1.23		69.9	68.1	62.3	0.65	0.57	2.8	4	2.9	55	62	▲ **1LE1003-0BB3** ■-■■■■	6	0.00048
0.25	**0.29**	**71 M**	1395	1.71		73.5	73.7	70.4	0.72	0.68	2.5	4.2	2.6	44	55	▲ **1LE1003-0CB2** ■-■■■■	7	0.00095
0.37	**0.43**	**71 M**	1410	2.5		77.3	76.8	73.2	0.7	0.99	3.1	4.8	3.1	56	67	▲ **1LE1003-0CB3** ■-■■■■	9	0.0014
0.55	**0.63**	**80 M**	1440	3.65		80.8	81.5	79.8	0.78	1.26	2.1	5.9	3.1	52	60	**1LE1003-0DB2** ■-■■■■	11	0.0021
0.75	**0.86**	**80 M**	1450	4.95		82.5	82.3	80.1	0.75	1.75	2.7	7.1	3.9	58	66	**1LE1003-0DB3** ■-■■■■	13	0.0029
1.1	**1.27**	**90 S**	1440	7.3	IE2	84.1	84.7	83.4	0.78	2.4	2.9	6.9	3.6	56	68	**1LE1003-0EB0** ■-■■■■	16	0.0036
1.5	**1.75**	**90 L**	1445	9.9		85.3	85.7	84.4	0.8	3.15	2.9	7.3	3.5	62	70	**1LE1003-0EB4** ■-■■■■	20	0.0049
2.2	**2.55**	**100 L**	1455	14.4		86.7	87.2	86.3	0.82	4.45	3	8.3	3.8	67	75	**1LE1003-1AB4** ■-■■■■	25	0.0101
3	**3.45**	**100 L**	1450	19.8	IE2	87.7	88.1	87.1	0.8	6.2	3.1	8	3.8	67	75	**1LE1003-1AB5** ■-■■■■	26	0.01
4	**4.55**	**112 M**	1460	26		88.6	89.2	88.6	0.82	7.9	2.4	7.1	3.7	58	70	**1LE1003-1BB2** ■-■■■■	34	0.017
5.5	**6.3**	**132 S**	1470	35.5		89.6	90	89.4	0.82	10.8	2.9	8.5	3.7	64	76	**1LE1003-1CB0** ■-■■■■	54	0.034
7.5	**8.6**	**132 M**	1465	49	IE2	90.4	90.7	90.4	0.8	15	3	8.5	3.8	72	80	**1LE1003-1CB2** ■-■■■■	61	0.0334
11	**12.6**	**160 M**	1470	71		91.4	91.9	91.9	0.82	21	2.5	8	3.5	67	75	**1LE1003-1DB2** ■-■■■■	78	0.0583
15	**17.3**	**160 L**	1465	98	IE2	92.1	92.7	92	0.83	28.5	2.8	7.9	3.4	58	66	**1LE1003-1DB4** ■-■■■■	106	0.089
18.5	**21.3**	**180 L**	1470	120	IE2	92.6	93.1	92.9	0.82	35	2.5	7.2	3.3	66	73	**1LE1003-1EB2** ■-■■■■	134	0.13
22	**25.3**	**180 L**	1470	143		93	93.6	93.6	0.83	41	2.3	6.8	3.3	68	75	**1LE1003-1EB4** ■-■■■■	142	0.14
30	**34.5**	**200 L**	1470	195	IE2	93.6	94	93.7	0.84	55	2.6	7.3	3.1	65	72	**1LE1003-2AB5** ■-■■■■	189	0.24

Voltages		Version					Order code
50 Hz 230 VΔ/400 VY	60 Hz[1] 460 VY	**Standard**	**2**	**2**			–
50 Hz 400 VΔ/690 VY	60 Hz[1] 460 VΔ	**Standard**	**3**	**4**			–
50 Hz 500 VY		Without additional charge	**2**	**7**			–
50 Hz 500 VΔ		Without additional charge	**4**	**0**			–
For other voltages [1] and more information, see from page 3/103			**9**	**0**			**...**
Types of construction		Version					Order code
Without flange	IM B3 [2]	**Standard**			**A**		–
With flange	IM B5 [2]	With additional charge			**F**		–
With flange	IM B14 [2]	With additional charge			**K**		–
For other types of construction and more information, see from page 3/107					■		**...**
Motor protection		Version					Order code
Without		**Standard**				**A**	–
PTC thermistor with 1 or 3 temperature sensors (frame sizes 80, 90 or 100 to 200)		With additional charge				**B**	–
For other motor protection and more information, see from page 3/120						■	**...**
Terminal box position		Version					
Terminal box at top		**Standard**				**4**	
For other terminal box positions and more information, see from page 3/123						■	
Special versions							Order code(s)
For options, see from page 3/126			**1LE1003-....**	■-■■■■		-Z	**...+...+...+...**

[1] Operating values at rated power for 60 Hz are stored in the SPC.

[2] Types derived from IM B3 (IM B6/7/8, IM V6, and IM V5), from IM B5 (IM V3 and IM V1) and from IM B14 (IM V19 and IM V18) are possible, provided that no requirements exist for condensation drainage holes (**H03**) or stamping of the type on the rating plate. The basic type IM B3, IM B5, or IM B14 is stamped as standard on the rating plate. For orders with condensation drainage holes (**H03**), the type must be specified.

© Innomotics 2024

Aluminum series Innomotics GP 1LE1003 – self-ventilated

Selection and ordering data

P_{rated}, 50 Hz/ P50 kW	P_{rated}, 60 Hz/ P60 [1] kW	Frame size FS	Operating values at rated power n_{rated}, 50 Hz rpm	T_{rated}, 50 Hz Nm	Different IE class 60 Hz/P60	η_{rated}, 50 Hz, 4/4 %	η_{rated}, 50 Hz, 3/4 %	η_{rated}, 50 Hz, 2/4 %	$\cos\varphi_{rated}$, 50 Hz, 4/4	I_{rated}, 50 Hz, 400 V A	T_{LR}/T_{rated}, 50 Hz	I_{LR}/I_{rated}, 50 Hz	T_B/T_{rated}, 50 Hz	L_{pfA}, 50 Hz dB(A)	L_{WA}, 50 Hz dB(A)	Aluminum series 1LE1003 Article No. ▲ New	$m_{IM\,B3}$ kg	J kgm²
_ Cooling: Self-ventilated (IC411) or with order code F90 forced-air cooled without external fan and fan cover (IC418)																		
_ Efficiency according to IEC 60034-30-1: IE3 Premium Efficiency, service factor (SF) 1.15																		
_ Insulation: Thermal class 155 (temperature class F), IP55 degree of protection, utilization in accordance with thermal class 130 (temperature class B)																		
6-pole: 1000 rpm at 50 Hz, 1200 rpm at 60 Hz [1]																		
0.18	–	**71 M**	885	1.94		63.9	64.8	60.8	0.69	0.59	2.3	2.8	2.3	39	50	▲ **1LE1003-0CC2** ■-■■■■	7	0.00098
0.25	–	**71 M**	885	2.7		68.6	69.5	66.2	0.69	0.76	2.6	3.2	2.6	46	57	▲ **1LE1003-0CC3** ■-■■■■	9	0.0014
0.37	–	**80 M**	940	3.75		73.5	73.1	69.4	0.66	1.1	2.3	4.2	2.7	42	53	**1LE1003-0DC2** ■-■■■■	12	0.0025
0.55	–	**80 M**	935	5.6		77.2	77	73.9	0.67	1.53	2.5	4.5	2.8	42	53	**1LE1003-0DC3** ■-■■■■	13	0.0031
0.75	–	**90 S**	945	7.6		78.9	80	78.8	0.7	1.96	2.2	4.6	2.6	43	55	**1LE1003-0EC0** ■-■■■■	16	0.004
1.1	–	**90 L**	950	11.1		81	81.4	79.3	0.66	2.95	2.8	5	3	60	68	**1LE1003-0EC4** ■-■■■■	19	0.0048
1.5	–	**100 L**	970	14.8		82.5	83.1	81.5	0.73	3.6	1.9	5.2	2.8	59	71	**1LE1003-1AC4** ■-■■■■	25	0.011
2.2	–	**112 M**	970	21.5		84.3	85	83.9	0.75	5	2.2	5.6	2.8	65	74	**1LE1003-1BC2** ■-■■■■	34	0.017
3	–	**132 S**	975	29.5		85.6	85.8	84.3	0.73	6.9	2.3	6.6	3.2	58	66	**1LE1003-1CC0** ■-■■■■	52	0.029
4	–	**132 M**	975	39		86.8	87.3	86.2	0.73	9.1	2.2	6.2	3	67	75	**1LE1003-1CC2** ■-■■■■	52	0.037
5.5	–	**132 M**	975	54		88	88.1	86.9	0.72	12.5	2.7	6.8	3.4	64	72	**1LE1003-1CC3** ■-■■■■	64	0.046
7.5	–	**160 M**	985	73		89.1	89.7	89	0.81	15	2.3	7.9	3.2	71	79	**1LE1003-1DC2** ■-■■■■	93	0.098
11	–	**160 L**	980	107		90.3	90.7	89.8	0.8	22	2.9	6.8	2.8	66	74	**1LE1003-1DC4** ■-■■■■	115	0.12
15	–	**180 L**	975	147		91.2	92	91.9	0.8	29.5	2.3	5.9	2.8	61	68	**1LE1003-1EC4** ■-■■■■	130	0.19
18.5	–	**200 L**	978	181		91.7	92.5	92.4	0.79	37	2.5	5.6	2.6	64	71	**1LE1003-2AC4** ■-■■■■	166	0.28
22	–	**200 L**	978	215		92.2	92.8	92.3	0.79	43.5	2.5	5.6	2.6	61	68	**1LE1003-2AC5** ■-■■■■	179	0.32

Voltages		Version					Order code
50 Hz 230 VΔ/400 VY	60 Hz [1] 460 VY	**Standard**	**2**	**2**			–
50 Hz 400 VΔ/690 VY	60 Hz [1] 460 VΔ	**Standard**	**3**	**4**			–
50 Hz 500 VY		Without additional charge	**2**	**7**			–
50 Hz 500 VΔ		Without additional charge	**4**	**0**			–
For other voltages [1] and more information, see from page 3/103			**9**	**0**			**...**
Types of construction		Version					Order code
Without flange	IM B3 [2]	**Standard**			**A**		–
With flange	IM B5 [2]	With additional charge			**F**		–
With flange	IM B14 [2]	With additional charge			**K**		–
For other types of construction and more information, see from page 3/107					■		**...**
Motor protection		Version					Order code
Without		**Standard**				**A**	–
PTC thermistor with 1 or 3 temperature sensors (frame sizes 80, 90 or 100 to 200)		With additional charge				**B**	–
For other motor protection and more information, see from page 3/120						■	**...**
Terminal box position		Version					
Terminal box at top		**Standard**				**4**	
For other terminal box positions and more information, see from page 3/123						■	
Special versions							Order code(s)
For options, see from page 3/126			**1LE1003-....**	■-■■■■		**-Z**	**...+...+...+...**

[1] Operating values at rated power for 60 Hz are stored in the SPC.

[2] Types derived from IM B3 (IM B6/7/8, IM V6, and IM V5), from IM B5 (IM V3 and IM V1) and from IM B14 (IM V19 and IM V18) are possible, provided that no requirements exist for condensation drainage holes (**H03**) or stamping of the type on the rating plate. The basic type IM B3, IM B5, or IM B14 is stamped as standard on the rating plate. For orders with condensation drainage holes (**H03**), the type must be specified.

© Innomotics 2024

Selection and ordering data

P_{rated}, 50 Hz/ P50	P_{rated}, 60 Hz/ P60 [1]	Frame size	Operating values at rated power n_{rated}, 50 Hz	T_{rated}, 50 Hz	Different IE class 60 Hz/P60	η_{rated}, 50 Hz, 4/4	η_{rated}, 50 Hz, 3/4	η_{rated}, 50 Hz, 2/4	$\cos\varphi_{rated}$, 50 Hz, 4/4	I_{rated}, 50 Hz, 400 V	T_{LR}/T_{rated}, 50 Hz	I_{LR}/I_{rated}, 50 Hz	T_B/T_{rated}, 50 Hz	L_{pfA}, 50 Hz	L_{WA}, 50 Hz	Aluminum series 1LE1003 Article No.	$m_{IM\ B3}$	J
kW	kW	FS	rpm	Nm		%	%	%		A				dB(A)	dB(A)	▲ New	kg	kgm²
_ Cooling: Self-ventilated (IC411) or with order code F90 forced-air cooled without external fan and fan cover (IC418)																		
_ Efficiency according to IEC 60034-30-1: IE3 Premium Efficiency, service factor (SF) 1.15																		
_ Insulation: Thermal class 155 (temperature class F), IP55 degree of protection, utilization in accordance with thermal class 130 (temperature class B)																		
8-pole: 750 rpm at 50 Hz, 900 rpm at 60 Hz [1]																		
0.12	**–**	**71 M**	660	1.74		50.7	49.9	44.8	0.63	0.54	2.1	2.5	2.1	46	53	▲ **1LE1003-0CD3 ■-■■■■**	9	0.0014
0.18	**–**	**80 M**	705	2.45		58.7	55.8	49.2	0.49	0.9	2.3	3	2.8	48	61	**1LE1003-0DD2 ■-■■■■**	12	0.0021
0.25	**–**	**80 M**	695	3.45		64.1	62.7	57.8	0.57	0.93	1.8	2.9	2.1	52	59	**1LE1003-0DD3 ■-■■■■**	13	0.003
0.37	**–**	**90 S**	685	5.2		69.3	68.3	63.7	0.68	1.13	1.7	2.9	1.8	56	53	**1LE1003-0ED0 ■-■■■■**	16	0.0045
0.55	**–**	**90 L**	695	7.6		73	71.2	66.5	0.67	1.62	2	3.5	2.3	61	68	**1LE1003-0ED4 ■-■■■■**	19	0.0045
0.75	**–**	**100 L**	710	10.1		75	75.7	73.1	0.67	2.1	1.5	3.7	2.1	61	69	**1LE1003-1AD4 ■-■■■■**	20	0.0096
1.1	**–**	**100 L**	710	14.8		77.7	76.4	75.1	0.67	3.05	1.8	4.1	2.3	62	70	**1LE1003-1AD5 ■-■■■■**	26	0.013
1.5	**–**	**112 M**	720	19.9		79.7	85.6	77.3	0.63	4.15	2.6	5.1	3.1	62	70	**1LE1003-1BD2 ■-■■■■**	34	0.028
2.2	**–**	**132 S**	725	29		81.9	82.5	80.9	0.71	5.3	1.9	5	2.5	65	73	**1LE1003-1CD0 ■-■■■■**	42	0.046
3	**–**	**132 M**	725	39.5		83.5	83.8	82.2	0.72	7.1	2	5.2	2.5	70	78	**1LE1003-1CD2 ■-■■■■**	58	0.061
4	**–**	**160 M**	730	52		84.8	86	85.5	0.74	9.1	1.6	4.7	2.1	63	71	**1LE1003-1DD2 ■-■■■■**	67	0.076
5.5	**–**	**160 M**	730	72		86.2	87	86.3	0.73	12.4	2	5.5	2.4	68	76	**1LE1003-1DD3 ■-■■■■**	78	0.1
7.5	**–**	**160 L**	730	98		87.3	87.9	86.9	0.73	16.9	2.3	5.8	2.7	70	78	**1LE1003-1DD4 ■-■■■■**	86	0.13
11	**–**	**180 L**	725	145		88.6	89.6	89	0.74	24	2.1	5.1	2.4	67	74	**1LE1003-1ED4 ■-■■■■**	161	0.267
15	**–**	**200 L**	730	196		89.6	90.1	89.4	0.73	33.5	3	6.8	3.7	57	70	**1LE1003-2AD5 ■-■■■■**	212	0.42

Voltages		Version					Order code
50 Hz 230 VΔ/400 VY	60 Hz [1] 460 VY	**Standard**	**2**	**2**			–
50 Hz 400 VΔ/690 VY	60 Hz [1] 460 VΔ	**Standard**	**3**	**4**			–
50 Hz 500 VY		Without additional charge	**2**	**7**			–
50 Hz 500 VΔ		Without additional charge	**4**	**0**			–
For other voltages [1] and more information, see from page 3/103			**9**	**0**			**...**
Types of construction		Version					Order code
Without flange	IM B3 [2]	**Standard**			**A**		–
With flange	IM B5 [2]	With additional charge			**F**		–
With flange	IM B14 [2]	With additional charge			**K**		–
For other types of construction and more information, see from page 3/107					■		**...**
Motor protection		Version					Order code
Without		**Standard**				**A**	–
PTC thermistor with 1 or 3 temperature sensors (frame sizes 80, 90 or 100 to 200)		With additional charge				**B**	–
For other motor protection and more information, see from page 3/120						■	**...**
Terminal box position		Version					
Terminal box at top		**Standard**				**4**	
For other terminal box positions and more information, see from page 3/123						■	
Special versions							Order code(s)
For options, see from page 3/126			**1LE1003-.... ■-■■■■ -Z**				...+...+...+...

[1] Operating values at rated power for 60 Hz are stored in the SPC.

[2] Types derived from IM B3 (IM B6/7/8, IM V6, and IM V5), from IM B5 (IM V3 and IM V1) and from IM B14 (IM V19 and IM V18) are possible, provided that no requirements exist for condensation drainage holes (**H03**) or stamping of the type on the rating plate. The basic type IM B3, IM B5, or IM B14 is stamped as standard on the rating plate. For orders with condensation drainage holes (**H03**), the type must be specified.

© Innomotics 2024

Selection and ordering data

P_{rated}, 50 Hz/ P50 kW	P_{rated}, 60 Hz/ P60 kW	Frame size FS	Operating values at rated power n_{rated}, 50 Hz rpm	T_{rated}, 50 Hz Nm	Different IE class 60 Hz/P60	η_{rated}, 50 Hz, 4/4 %	η_{rated}, 50 Hz, 3/4 %	η_{rated}, 50 Hz, 2/4 %	$\cos\varphi_{rated}$, 50 Hz, 4/4	I_{rated}, 50 Hz, 400 V A	T_{LR}/T_{rated}, 50 Hz	I_{LR}/I_{rated}, 50 Hz	T_B/T_{rated}, 50 Hz	L_{pfA}, 50 Hz dB(A)	L_{WA}, 50 Hz dB(A)	Aluminum series 1LE1003 Article No. ▲ New					$m_{IM\ B3}$ kg	J kgm²
_ Cooling: Self-ventilated (IC411) or with order code F90 forced-air cooled without external fan and fan cover (IC418)																						
_ Efficiency according to IEC 60034-30-1: IE3 Premium Efficiency, service factor (SF) 1.15																						
_ Insulation: Thermal class 155 (temperature class F), IP55 degree of protection, utilization in accordance with thermal class 130 (temperature class B)																						
2-pole: 3000 rpm at 50 Hz, 3600 rpm at 60 Hz [1]																						
0,75	**0,86**	**71 M**	2835	2.55		80.7	80.7	78.1	0.78	1.72	3.5	6.4	3.4	62	70	▲ **1LE1003-0CA6**	■	-	■	■	■	9	0.00058
1.5	**1,75**	**80 M**	2865	5		84.2	84.8	84.4	0.84	3.05	3.2	8	3.7	69	77	**1LE1003-0DA6**	■	-	■	■	■	13	0.0015
3	**3,45**	**90 L**	2920	9.8	IE2	87.1	87.2	85.9	0.84	5.9	4.4	10.2	4.6	71	78	**1LE1003-0EA6**	■	-	■	■	■	20	0.00301
4	**4,55**	**100 L**	2910	13.1		88.1	88.9	87.8	0.83	7.9	3.5	8.9	4.6	77	85	**1LE1003-1AA6**	■	-	■	■	■	26	0.00462
5.5	**6,3**	**112 M**	2950	17.8		89.2	89.5	88.8	0.86	10.4	2.7	8.8	3.9	69	77	**1LE1003-1BA6**	■	-	■	■	■	36	0.00959
11	**12.6**	**132 M**	2940	35.5		91.2	92.1	92.3	0.89	19.6	2.8	9.8	4.1	68	76	**1LE1003-1CA6**	■	-	■	■	■	55	0.023
15	**17,3**	**132 M**	2960	48.5		91.9	92	91.1	0.84	28	2.9	9.1	4.4	73	81	**1LE1003-1CA7**	■	-	■	■	■	65	0.0321
22	**25.3**	**160 L**	2945	71		92.7	92.8	92.2	0.91	37.5	3.5	9.9	4.4	76	84	**1LE1003-1DA6**	■	-	■	■	■	108	0.0603
30	**33.5**	**180 L**	2950	97		93.3	93.6	93.1	0.88	53	2.6	8.6	3.9	67	80	**1LE1003-1EA6**	■	-	■	■	■	139	0.094
45	**51**	**200 L**	2950	146		94	94.5	93.9	0.87	79	2.5	7.1	3.2	77	77	**1LE1003-2AA6**	■	-	■	■	■	194	0.17
4-pole: 1500 rpm at 50 Hz, 1800 rpm at 60 Hz [1]																						
1.1	**1,27**	**80 M**	1445	7,3	IE2	84,1	84,6	83,6	0,78	2,4	3	7	3,5	63	70	**1LE1003-0DB6**	■	-	■	■	■	15	0,00329
4	**4,55**	**100 L**	1455	26.5		88.6	89.4	88.8	0.81	8	2.9	7.5	3.7	67	75	**1LE1003-1AB6**	■	-	■	■	■	42	0.0149
5.5	**6.3**	**112 M**	1460	36	IE2	89.6	89.9	89.4	0.8	11.1	3.2	8	4.1	67	75	**1LE1003-1BB6**	■	-	■	■	■	49	0.0186
11	**12.6**	**132 M**	1470	71		91.4	91.8	91.1	0.79	22	2.8	8.3	3.8	71	79	**1LE1003-1CB6**	■	-	■	■	■	81	0.041
18.5	**21.3**	**160 L**	1480	119	IE2	92.6	92.7	91.8	0.76	38	2.7	8.1	3.8	62	75	**1LE1003-1DB6**	■	-	■	■	■	111	0.099
30	**34.5**	**180 L**	1470	195	IE2	93.6	94	93.8	0.79	59	3	8.2	3.8	66	74	**1LE1003-1EB6**	■	-	■	■	■	158	0.173
37	**42.5**	**200 L**	1475	240	IE2	93.9	94	93.6	0.81	70	3.1	8.1	3.5	65	72	**1LE1003-2AB6**	■	-	■	■	■	205	0.275
6-pole: 1000 rpm at 50 Hz, 1200 rpm at 60 Hz [1]																						
3	**–**	**112 M**	965	29.5	IE2	85.6	86.8	86.6	0.74	6.8	2.3	5.8	2.7	68	76	▲ **1LE1003-1BC6**	■	-	■	■	■	45	0.01768
18.5	**–**	**180 L**	975	181		91.7	92.3	91.9	0.77	38	2.6	6.9	3.3	68	80	**1LE1003-1EC6**	■	-	■	■	■	148	0.247
30	**–**	**200 L**	978	295		92.9	93.6	93.7	0.79	59	2.8	6.5	2.8	61	68	**1LE1003-2AC6**	■	-	■	■	■	220	0.421
8-pole: 750 rpm at 50 Hz, 900 rpm at 60 Hz [1]																						
18.5	**–**	**200 L**	725	245	IE2	90.1	90.5	89.5	0.71	41.5	3.1	6.7	3.7	60	68	**1LE1003-2AD6**	■	-	■	■	■	205	0.405

Voltages		Version					Order code
50 Hz 230 VΔ/400 VY	60 Hz [1] 460 VY	**Standard**	**2**	**2**			–
50 Hz 400 VΔ/690 VY	60 Hz [1] 460 VΔ	**Standard**	**3**	**4**			–
50 Hz 500 VY		Without additional charge	**2**	**7**			–
50 Hz 500 VΔ		Without additional charge	**4**	**0**			–
For other voltages [1] and more information, see from page 3/103			**9**	**0**			**...**
Types of construction		Version					Order code
Without flange	IM B3 [2]	**Standard**			**A**		–
With flange	IM B5 [2]	With additional charge			**F**		–
For other types of construction and more information, see from page 3/107					■		**...**
Motor protection		Version					Order code
Without		**Standard**				**A**	–
PTC thermistor with 3 temperature sensors		With additional charge				**B**	–
For other motor protection and more information, see from page 3/120						■	**...**
Terminal box position		Version					
Terminal box at top		**Standard**				**4**	
For other terminal box positions and more information, see from page 3/123						■	
Special versions							Order code(s)
For options, see from page 3/126			**1LE1003-....**	■	-	■ ■ ■	**-Z** ...+...+...+...

[1] Operating values at rated power for 60 Hz are stored in the SPC.

[2] Types derived from IM B3 (IM B6/7/8, IM V6, and IM V5), from IM B5 (IM V3 and IM V1) and from IM B14 (IM V19 and IM V18) are possible, provided that no requirements exist for condensation drainage holes (**H03**) or stamping of the type on the rating plate. The basic type IM B3, IM B5, or IM B14 is stamped as standard on the rating plate. For orders with condensation drainage holes (**H03**), the type must be specified.

© Innomotics 2024

Selection and ordering data

P_{rated}, 50 Hz/ P50 kW	P_{rated}, 60 Hz/ P60 [1] kW	Frame size FS	Operating values at rated power n_{rated}, 50 Hz rpm	T_{rated}, 50 Hz Nm	Different IE class 60 Hz/P60	η_{rated}, 50 Hz, 4/4 %	η_{rated}, 50 Hz, 3/4 %	η_{rated}, 50 Hz, 2/4 %	$\cos\varphi_{rated}$, 50 Hz, 4/4	I_{rated}, 50 Hz, 400 V A	T_{LR}/T_{rated}, 50 Hz	I_{LR}/I_{rated}, 50 Hz	T_B/T_{rated}, 50 Hz	L_{pfA}, 50 Hz dB(A)	L_{WA}, 50 Hz dB(A)	Aluminum series 1LE1083 Article No.	$m_{IM\,B3}$ kg	J kgm²
_ Cooling: Self-ventilated (IC411) or with order code F90 forced-air cooled without external fan and fan cover (IC418)																		
_ Efficiency according to IEC 60034-30-1: IE3 Premium Efficiency, service factor (SF) 1.0																		
_ Insulation: Thermal class 155 (temperature class F), IP55 degree of protection, utilization in accordance with thermal class 130 (temperature class B)																		
2-pole: 3000 rpm at 50 Hz, 3600 rpm at 60 Hz [1]																		
3	**3.45**	**100 L**	2920	9.8		87.1	87.8	87.4	0.88	5.6	3.2	8.1	4.6	67	79	**1LE1083-1AA4** ■-■■■■	26	0.0054
4	**4.55**	**112 M**	2950	12.9		88.1	88.7	88.2	0.89	7.4	2.5	9.2	3.4	69	81	**1LE1083-1BA2** ■-■■■■	34	0.012
5.5	**6.3**	**132 S**	2960	17.7		89.2	89.6	88.9	0.91	9.8	2.1	9.7	3.6	72	79	**1LE1083-1CA0** ■-■■■■	57	0.031
7.5	**8.6**	**132 S**	2950	24.5		90.1	90.9	90.7	0.91	13.2	2.1	9	3.3	68	80	**1LE1083-1CA1** ■-■■■■	57	0.031
11	**12.6**	**160 M**	2955	35.5		91.2	91.5	90.7	0.9	19.3	2.5	8.5	3.4	79	86	**1LE1083-1DA2** ■-■■■■	84	0.061
15	**17.3**	**160 M**	2960	48.5		91.9	91.9	91	0.86	27.5	2.8	9.5	4	70	82	**1LE1083-1DA3** ■-■■■■	84	0.061
18.5	**21.3**	**160 L**	2960	60		92.4	92.9	92.6	0.92	31.5	2.8	9.7	3.8	78	85	**1LE1083-1DA4** ■-■■■■	109	0.073
22	**24.5**	**180 M**	2950	71		92.7	93	92.4	0.89	38.5	2.3	7.5	3.5	67	80	**1LE1083-1EA2** ■-■■■■	129	0.08
30	**33.5**	**200 L**	2955	97		93.3	93.6	93.3	0.86	54	2.6	7.5	3.3	68	81	**1LE1083-2AA4** ■-■■■■	173	0.134
37	**41.5**	**200 L**	2950	120		93.7	93.9	93.5	0.88	65	2.6	7.8	3.4	68	81	**1LE1083-2AA5** ■-■■■■	194	0.158
4-pole: 1500 rpm at 50 Hz, 1800 rpm at 60 Hz [1]																		
2.2	**2.55**	**100 L**	1465	14.3	IE2	86.7	87	85.9	0.83	4.4	2.5	9.2	3.8	60	72	**1LE1083-1AB4** ■-■■■■	30	0.014
3	**3.45**	**100 L**	1460	19.6	IE2	87.7	88.4	87.8	0.84	5.9	2.4	8.5	3.4	68	75	**1LE1083-1AB5** ■-■■■■	42	0.016
4	**4.55**	**112 M**	1460	26		88.6	89.6	89.4	0.85	7.7	2.1	7.5	3	67	74	**1LE1083-1BB2** ■-■■■■	49	0.02
5.5	**6.3**	**132 S**	1470	35.5		89.6	90.1	89.7	0.82	10.8	2.5	8.3	3.6	64	76	**1LE1083-1CB0** ■-■■■■	64	0.034
7.5	**8.6**	**132 M**	1465	49	IE2	90.4	91.1	90.8	0.84	14.3	2.5	8.1	3.3	64	76	**1LE1083-1CB2** ■-■■■■	61	0.046
11	**12.6**	**160 M**	1475	71		91.4	91.8	91.2	0.84	20.5	2.3	7.2	3	65	77	**1LE1083-1DB2** ■-■■■■	83	0.071
15	**17.3**	**160 L**	1480	97	IE2	92.1	92.4	92	0.85	27.5	2.9	8.1	3.3	67	74	**1LE1083-1DB4** ■-■■■■	111	0.099
18.5	**21.3**	**180 M**	1470	120		92.6	93.1	93	0.82	35	2.7	8	3.5	66	73	**1LE1083-1EB2** ■-■■■■	134	0.13
22	**25.3**	**180 L**	1470	143	IE2	93	93.4	93.1	0.82	41.5	2.6	7.7	3.3	62	75	**1LE1083-1EB4** ■-■■■■	142	0.14
30	**34.5**	**200 L**	1470	195	IE2	93.6	94.3	94.5	0.84	55	2.6	7.3	3.1	59	72	**1LE1083-2AB5** ■-■■■■	189	0.24
6-pole: 1000 rpm at 50 Hz, 1200 rpm at 60 Hz [1]																		
15	**18**	**180 L**	975	147	IE2	91.2	91.6	91.2	0.77	31	2.3	6.4	3	55	68	**1LE1083-1EC4** ■-■■■■	130	0.19
18.5	**22**	**200 L**	978	181	IE2	91.7	92.1	91.9	0.79	37	2.5	5.6	2.6	58	71	**1LE1083-2AC4** ■-■■■■	166	0.28
22	**26.5**	**200 L**	978	215	IE1	92.2	93.3	93.5	0.79	43.5	2.5	5.6	2.6	55	68	**1LE1083-2AC5** ■-■■■■	179	0.32
8-pole: 750 rpm at 50 Hz, 900 rpm at 60 Hz [1]																		
11	**13.2**	**180 L**	725	145		88.6	89.5	89.2	0.74	24	2.1	5.4	2.6	62	75	**1LE1083-1ED4** ■-■■■■	161	0.267
15	**18**	**200 L**	730	196		89.6	89.8	89.1	0.73	33	3	6.8	3.7	57	70	**1LE1083-2AD5** ■-■■■■	212	0.42

Voltages		Version					Order code
50 Hz 230 VΔ/400 VY	60 Hz[1] 460 VY	**Standard**	**2**	**2**			–
50 Hz 400 VΔ/690 VY	60 Hz[1] 460 VΔ	**Standard**	**3**	**4**			–
50 Hz 500 VY		Without additional charge	**2**	**7**			–
50 Hz 500 VΔ		Without additional charge	**4**	**0**			–
For other voltages [1] and more information, see from page 3/103			**9**	**0**			**...**
Types of construction		Version					Order code
Without flange	IM B3 [2]	**Standard**			**A**		–
With flange	IM B5 [2]	With additional charge			**F**		–
With flange	IM B14 [2]	With additional charge			**K**		–
For other types of construction and more information, see from page 3/107					■		**...**
Motor protection		Version					Order code
Without		**Standard**				**A**	–
PTC thermistor with 1 or 3 temperature sensors		With additional charge				**B**	–
For other motor protection and more information, see from page 3/120						■	**...**
Terminal box position		Version					
Terminal box at top		**Standard**				**4**	
For other terminal box positions and more information, see from page 3/123						■	
Special versions							Order code(s)
For options, see from page 3/126			**1LE1083-....** ■-■■■■			-Z	...+...+...+...

[1] Operating values at rated power for 60 Hz are stored in the SPC.

[2] Types derived from IM B3 (IM B6/7/8, IM V6, and IM V5), from IM B5 (IM V3 and IM V1) and from IM B14 (IM V19 and IM V18) are possible, provided that no requirements exist for condensation drainage holes (**H03**) or stamping of the type on the rating plate. The basic type IM B3, IM B5, or IM B14 is stamped as standard on the rating plate. For orders with condensation drainage holes (**H03**), the type must be specified.

© Innomotics 2024

Selection and ordering data

P_{rated}, 50 Hz/ P50	P_{rated}, 60 Hz/ P60 [1]	Frame size	Operating values at rated power n_{rated}, 50 Hz	T_{rated}, 50 Hz	Different IE class 60 Hz/P60	η_{rated}, 50 Hz, 4/4	η_{rated}, 50 Hz, 3/4	η_{rated}, 50 Hz, 2/4	$\cos\varphi_{rated}$, 50 Hz, 4/4	I_{rated}, 50 Hz, 400 V	T_{LR}/T_{rated}, 50 Hz	I_{LR}/I_{rated}, 50 Hz	T_B/T_{rated}, 50 Hz	L_{pfA}, 50 Hz	L_{WA}, 50 Hz	Cast-iron series 1LE1503 – *Basic Line* Article No.	$m_{IM\,B3}$	J
kW	kW	FS	rpm	Nm		%	%	%		A				dB(A)	dB(A)		kg	kgm²
_ Cooling: Self-ventilated (IC411) or with order code F90 forced-air cooled without external fan and fan cover (IC418)																		
_ Efficiency according to IEC 60034-30-1: IE3 Premium Efficiency, service factor (SF) 1.15																		
_ Insulation: Thermal class 155 (temperature class F), IP55 degree of protection, utilization in accordance with thermal class 130 (temperature class B)																		
2-pole: 3000 rpm at 50 Hz, 3600 rpm at 60 Hz [1]																		
0.37	**0.43**	**71 M**	2850	1.24		73.8	73.3	69.7	0.76	0.95	3.5	5.8	3.5	52	63	**1LE1503-0CA2** ■-■■■■	13	0.00045
0.55	**0.63**	**71 M**	2850	1.84		77.8	77.5	74.5	0.76	1.34	3.7	6.1	3.7	57	68	**1LE1503-0CA3** ■-■■■■	15	0.00056
0.75	**0.86**	**80 M**	2850	2.5		80.7	82.2	81.9	0.86	1.56	2.6	6.2	3	60	71	**1LE1503-0DA2** ■-■■■■	18	0.0011
1.1	**1.27**	**80 M**	2885	3.65		82.7	83.9	83.1	0.85	2.25	3	7.1	3.3	60	71	**1LE1503-0DA3** ■-■■■■	21	0.0013
1.5	**1.75**	**90 S**	2910	4.9		84.2	84.6	83.2	0.86	3	2.7	8.1	4.2	65	77	**1LE1503-0EA0** ■-■■■■	26	0.0021
2.2	**2.55**	**90 L**	2910	7.2	IE2	85.9	86.8	86.1	0.88	4.2	2.6	8.3	4	65	77	**1LE1503-0EA4** ■-■■■■	32	0.0031
3	**3.45**	**100 L**	2910	9.8		87.1	87.7	87	0.87	5.7	4.4	9.4	4.5	72	80	**1LE1503-1AA4** ■-■■■■	37	0.0041
4	**4.55**	**112 M**	2945	13		88.1	88.8	87.9	0.89	7.4	2.6	9.1	3.6	73	81	**1LE1503-1BA2** ■-■■■■	41	0.0079
5.5	**6.3**	**132 S**	2945	17.8	IE2	89.2	89.5	88.6	0.88	10.1	2.5	8.9	3.8	69	77	**1LE1503-1CA0** ■-■■■■	66	0.0168
7.5	**8.6**	**132 S**	2950	24.5		90.1	91	91	0.92	13.1	1.9	8.3	3.9	68	80	**1LE1503-1CA1** ■-■■■■	75	0.031
11	**12.6**	**160 M**	2945	35.5	IE2	91.2	91.4	90.6	0.89	19.6	2.5	8.3	3.5	77	85	**1LE1503-1DA2** ■-■■■■	97	0.037
15	**17.3**	**160 M**	2955	48.5		91.9	91.9	90.8	0.86	27.5	3.5	10.2	4.4	77	85	**1LE1503-1DA3** ■-■■■■	104	0.043
18.5	**21.3**	**160 L**	2955	60		92.4	92.8	92.4	0.9	32	2.8	9	4.2	70	82	**1LE1503-1DA4** ■-■■■■	123	0.068
22	**24.5**	**180 M**	2950	71		92.7	93.2	92.9	0.89	38.5	2.3	7.5	3.5	67	80	**1LE1503-1EA2** ■-■■■■	165	0.08
30	**33.5**	**200 L**	2955	97		93.3	93.5	92.9	0.87	53	2.5	7	3.3	67	80	**1LE1503-2AA4** ■-■■■■	220	0.134
37	**41.5**	**200 L**	2955	120	IE2	93.7	94.2	94	0.88	65	2.5	7.1	3.2	67	80	**1LE1503-2AA5** ■-■■■■	245	0.158
45	**51**	**225 M**	2960	145		94	94.5	94.4	0.89	78	2.4	6.9	3.1	73	87	**1LE1503-2BA2** ■-■■■■	315	0.26
55	**62**	**250 M**	2975	177		94.3	94.5	93.9	0.89	95	2.3	6.7	3.1	73	87	**1LE1503-2CA2** ■-■■■■	385	0.46
75	**84**	**280 S**	2975	240	IE2	94.7	94.8	94.1	0.89	128	2.4	6.8	3	74	88	**1LE1503-2DA0** ■-■■■■	510	0.77
90	**101**	**280 M**	2975	290	IE2	95	95.1	94.6	0.9	152	2.4	7.2	3.1	74	88	**1LE1503-2DA2** ■-■■■■	590	0.94
110	**123**	**315 S**	2982	350		95.2	95.4	94.9	0.91	183	2.4	7.1	3.1	75	89	**1LE1503-3AA0** ■-■■■■	750	1.39
132	**148**	**315 M**	2982	425		95.4	95.5	95.2	0.91	220	2.5	7.2	3.1	75	89	**1LE1503-3AA2** ■-■■■■	880	1.6
160	**180**	**315 L**	2982	510	IE2	95.6	95.7	95.2	0.92	265	2.8	7.8	3.3	77	91	**1LE1503-3AA4** ■-■■■■	980	1.9
200	**224**	**315 L**	2982	640		95.8	95.9	95.5	0.92	330	2.5	7.2	3	77	91	**1LE1503-3AA5** ■-■■■■	1150	2.3

Voltages [2]		Version					Order code
50 Hz 230 VΔ/400 VY	60 Hz [1] 460 VY	**Standard**	**2**	**2**			–
50 Hz 400 VΔ/690 VY	60 Hz [1] 460 VΔ	**Standard**	**3**	**4**			–
50 Hz 500 VY		Without additional charge	**2**	**7**			–
50 Hz 500 VΔ		Without additional charge	**4**	**0**			–
For other voltages [1] and more information, see from page 3/104			**9**	**0**			**...**
Types of construction		Version					Order code
Without flange	IM B3 [3]	**Standard**		**A**			–
With flange	IM B5 [3]	With additional charge		**F**			–
For other types of construction and more information, see from page 3/111				■			**...**
Motor protection		Version					Order code
Without		**Standard**			**A**		–
PTC thermistor with 3 temperature sensors		With additional charge			**B**		–
For other motor protection and more information, see from page 3/121					■		**...**
Terminal box position		Version					
Terminal box at top		**Standard**				**4**	
For other terminal box positions and more information, see from page 3/124						■	
Special versions							Order code(s)
Forced-air cooled motors w/o ext. fan/fan cover (IC418)			**1LE1503-....** ■-■■■■ -Z				**F90+...+...+...**
For options, see from page 3/132			**1LE1503-....** ■-■■■■ -Z				**...+...+...+...**

[1] Operating values at rated power for 60 Hz are stored in the SPC.

[2] Parallel supply lines are required in the case of connection to ≤ 240 V. For frame size 315 with connection to ≤ 240 V, due to the high current, a drilled, removable entry plate (order code **R52**) or a larger terminal box (order code **R50**) can be used. Order codes **R52** and **R50** alter the motor dimensions.

[3] Types derived from IM B3 (IM B6/7/8, IM V6 and IM V5), from IM B5 (IM V3 and IM V1) and from IM B14 (IM V19 and IM V18) are possible, provided that no requirement exists for stamping of the type on the rating plate. The basic type IM B3, IM B5, or IM B14 is stamped as standard on the rating plate. If mounted in a different position, the position must be specified to ensure that the condensation drainage holes are positioned correctly.

© Innomotics 2024

Selection and ordering data

P_{rated}, 50 Hz/ P50 kW	P_{rated}, 60 Hz/ P60 [1] kW	Frame size FS	Operating values at rated power n_{rated}, 50 Hz rpm	T_{rated}, 50 Hz Nm	Different IE class 60 Hz/P60	η_{rated}, 50 Hz, 4/4 %	η_{rated}, 50 Hz, 3/4 %	η_{rated}, 50 Hz, 2/4 %	$\cos\varphi_{rated}$, 50 Hz, 4/4	I_{rated}, 50 Hz, 400 V A	T_{LR}/T_{rated}, 50 Hz	I_{LR}/I_{rated}, 50 Hz	T_B/T_{rated}, 50 Hz	L_{pfA}, 50 Hz dB(A)	L_{WA}, 50 Hz dB(A)	Cast-iron series 1LE1503 – *Basic Line* Article No.	$m_{IM\ B3}$ kg	J kgm²
_ Cooling: Self-ventilated (IC411) or with order code F90 forced-air cooled without external fan and fan cover (IC418)																		
_ Efficiency according to IEC 60034-30-1: IE3 Premium Efficiency, service factor (SF) 1.15																		
_ Insulation: Thermal class 155 (temperature class F), IP55 degree of protection, utilization in accordance with thermal class 130 (temperature class B)																		
4-pole: 1500 rpm at 50 Hz, 1800 rpm at 60 Hz [1]																		
0.25	**0.29**	**71 M**	1395	1.71		73.5	73.7	70.4	0.72	0.68	2.5	4.2	2.6	44	55	**1LE1503-0CB2** ■-■■■■	13	0.00095
0.37	**0.43**	**71 M**	1410	2.5		77.3	76.8	73.2	0.7	0.99	3.1	4.8	3.1	56	67	**1LE1503-0CB3** ■-■■■■	16	0.0014
0.55	**0.63**	**80 M**	1440	3.65		80.8	81.5	79.8	0.78	1.26	2.1	5.9	3.1	52	60	**1LE1503-0DB2** ■-■■■■	18	0.0021
0.75	**0.86**	**80 M**	1450	4.95		82.5	82.3	80.1	0.75	1.75	2.7	7.1	3.9	58	66	**1LE1503-0DB3** ■-■■■■	22	0.0029
1.1	**1.27**	**90 S**	1440	7.3	IE2	84.1	84.7	83.4	0.78	2.4	2.9	6.9	3.6	56	68	**1LE1503-0EB0** ■-■■■■	25	0.0036
1.5	**1.75**	**90 L**	1445	9.9		85.3	85.7	84.4	0.8	3.15	2.9	7.3	3.5	62	70	**1LE1503-0EB4** ■-■■■■	31	0.0049
2.2	**2.55**	**100 L**	1455	14.4		86.7	87.2	86.3	0.82	4.45	3	8.3	3.8	67	75	**1LE1503-1AB4** ■-■■■■	40	0.0101
3	**3.45**	**100 L**	1450	19.8	IE2	87.7	88.1	87.1	0.8	6.2	3.1	8	3.8	67	75	**1LE1503-1AB5** ■-■■■■	40	0.01
4	**4.55**	**112 M**	1460	26		88.6	89.2	88.6	0.82	7.9	2.4	7.1	3.7	58	70	**1LE1503-1BB2** ■-■■■■	43	0.017
5.5	**6.3**	**132 S**	1470	35.5		89.6	90	89.4	0.82	10.8	2.9	8.5	3.7	64	76	**1LE1503-1CB0** ■-■■■■	74	0.034
7.5	**8.6**	**132 M**	1465	49	IE2	90.4	90.7	90.4	0.8	15	3	8.5	3.8	72	80	**1LE1503-1CB2** ■-■■■■	80	0.0334
11	**12.6**	**160 M**	1470	71		91.4	91.9	91.9	0.82	21	2.5	8	3.5	67	75	**1LE1503-1DB2** ■-■■■■	105	0.0583
15	**17.3**	**160 L**	1465	98	IE2	92.1	92.7	92	0.83	28.5	2.8	7.9	3.4	58	66	**1LE1503-1DB4** ■-■■■■	133	0.089
18.5	**21.3**	**180 M**	1470	120	IE2	92.6	93.1	92.9	0.82	35	2.5	7.2	3.3	66	73	**1LE1503-1EB2** ■-■■■■	166	0.13
22	**25.3**	**180 L**	1470	143		93	93.6	93.6	0.83	41	2.3	6.8	3.3	68	75	**1LE1503-1EB4** ■-■■■■	178	0.14
30	**34.5**	**200 L**	1470	195	IE2	93.6	94	93.7	0.84	55	2.6	7.3	3.1	65	72	**1LE1503-2AB5** ■-■■■■	240	0.24
37	**42.5**	**225 S**	1478	240	IE2	93.9	94.5	94.4	0.86	66	2.5	6.4	2.7	65	78	**1LE1503-2BB0** ■-■■■■	285	0.42
45	**52**	**225 M**	1478	290	IE2	94.2	94.9	95	0.86	80	2.6	6.6	2.6	66	79	**1LE1503-2BB2** ■-■■■■	340	0.52
55	**63**	**250 M**	1482	355	IE2	94.6	95.1	95	0.87	96	2.5	6.8	2.9	66	79	**1LE1503-2CB2** ■-■■■■	420	0.85
75	**86**	**280 S**	1485	480	IE2	95	95.3	95	0.86	133	2.5	6.9	3	69	83	**1LE1503-2DB0** ■-■■■■	570	1.39
90	**104**	**280 M**	1485	580	IE2	95.2	95.5	95.3	0.87	157	2.6	7.2	3	70	84	**1LE1503-2DB2** ■-■■■■	670	1.7
110	**127**	**315 S**	1488	710		95.4	95.8	95.5	0.87	191	2.6	6.8	2.9	70	84	**1LE1503-3AB0** ■-■■■■	760	2.2
132	**152**	**315 M**	1490	850		95.6	95.9	95.9	0.87	230	2.8	7.3	3	73	87	**1LE1503-3AB2** ■-■■■■	960	2.9
160	**184**	**315 L**	1490	1030		95.8	96.1	96.1	0.87	275	2.9	7.3	3.1	73	87	**1LE1503-3AB4** ■-■■■■	990	3.1
200	**230**	**315 L**	1488	1280	IE2	96	96.3	96.1	0.88	340	3.2	7.4	3	73	87	**1LE1503-3AB5** ■-■■■■	1190	3.7

Voltages [2]		Version					Order code
50 Hz 230 VΔ/400 VY	60 Hz [1] 460 VY	**Standard**	**2**	**2**			–
50 Hz 400 VΔ/690 VY	60 Hz [1] 460 VΔ	**Standard**	**3**	**4**			–
50 Hz 500 VY		Without additional charge	**2**	**7**			–
50 Hz 500 VΔ		Without additional charge	**4**	**0**			–
For other voltages [1] and more information, see from page 3/104			**9**	**0**			**...**
Types of construction		Version					Order code
Without flange	IM B3 [3]	**Standard**			**A**		–
With flange	IM B5 [3]	With additional charge			**F**		–
For other types of construction and more information, see from page 3/111					■		**...**
Motor protection		Version					Order code
Without		**Standard**				**A**	–
PTC thermistor with 3 temperature sensors		With additional charge				**B**	–
For other motor protection and more information, see from page 3/121						■	**...**
Terminal box position		Version					
Terminal box at top		**Standard**					**4**
For other terminal box positions and more information, see from page 3/124							■
Special versions							Order code(s)
Forced-air cooled motors w/o ext. fan/fan cover (IC418)		**1LE1503-....** ■-■■■■ -Z					**F90+...+...+...**
For options, see from page 3/132		**1LE1503-....** ■-■■■■ -Z					**...+...+...+...**

[1] Operating values at rated power for 60 Hz are stored in the SPC.

[2] Parallel supply lines are required in the case of connection to ≤ 240 V.
For frame size 315 with connection to ≤ 240 V, due to the high current, a drilled, removable entry plate (order code **R52**) or a larger terminal box (order code **R50**) can be used. Order codes **R52** and **R50** alter the motor dimensions.

[3] Types derived from IM B3 (IM B6/7/8, IM V6 and IM V5), from IM B5 (IM V3 and IM V1) and from IM B14 (IM V19 and IM V18) are possible, provided that no requirement exists for stamping of the type on the rating plate. The basic type IM B3, IM B5, or IM B14 is stamped as standard on the rating plate. If mounted in a different position, the position must be specified to ensure that the condensation drainage holes are positioned correctly.

© Innomotics 2024

Selection and ordering data

P_{rated}, 50 Hz/ P50 kW	P_{rated}, 60 Hz/ P60 [1] kW	Frame size FS	Operating values at rated power n_{rated}, 50 Hz rpm	T_{rated}, 50 Hz Nm	Different IE class 60 Hz/P60	η_{rated}, 50 Hz, 4/4 %	η_{rated}, 50 Hz, 3/4 %	η_{rated}, 50 Hz, 2/4 %	$\cos\varphi_{rated}$, 50 Hz, 4/4	I_{rated}, 50 Hz, 400 V A	T_{LR}/T_{rated}, 50 Hz	I_{LR}/I_{rated}, 50 Hz	T_B/T_{rated}, 50 Hz	L_{pfA}, 50 Hz dB(A)	L_{WA}, 50 Hz dB(A)	Cast-iron series 1LE1503 – *Basic Line* Article No.	$m_{IM\ B3}$ kg	J kgm²
_ Cooling: Self-ventilated (IC411) or with order code F90 forced-air cooled without external fan and fan cover (IC418)																		
_ Efficiency according to IEC 60034-30-1: IE3 Premium Efficiency, service factor (SF) 1.15																		
_ Insulation: Thermal class 155 (temperature class F), IP55 degree of protection, utilization in accordance with thermal class 130 (temperature class B)																		
6-pole: 1000 rpm at 50 Hz, 1200 rpm at 60 Hz [1]																		
0.18	–	**71 M**	885	1.94		63.9	64.8	60.8	0.69	0.59	2.3	2.8	2.3	39	50	**1LE1503-0CC2** ■-■■■■	13	0.00098
0.25	–	**71 M**	885	2.7		68.6	69.5	66.2	0.69	0.76	2.6	3.2	2.6	46	57	**1LE1503-0CC3** ■-■■■■	16	0.0014
0.37	–	**80 M**	940	3.75		73.5	73.1	69.4	0.66	1.1	2.3	4.2	2.7	42	53	**1LE1503-0DC2** ■-■■■■	19	0.0025
0.55	–	**80 M**	935	5.6		77.2	77	73.9	0.67	1.53	2.5	4.5	2.8	42	53	**1LE1503-0DC3** ■-■■■■	22	0.0031
0.75	–	**90 S**	945	7.6		78.9	80	78.8	0.7	1.96	2.2	4.6	2.6	43	55	**1LE1503-0EC0** ■-■■■■	26	0.004
1.1	–	**90 L**	950	11.1		81	81.4	79.3	0.66	2.95	2.8	5	3	60	68	**1LE1503-0EC4** ■-■■■■	31	0.0048
1.5	–	**100 L**	970	14.8		82.5	83.1	81.5	0.73	3.6	1.9	5.2	2.8	59	71	**1LE1503-1AC4** ■-■■■■	36	0.011
2.2	–	**112 M**	970	21.5		84.3	85	83.9	0.75	5	2.2	5.6	2.8	65	74	**1LE1503-1BC2** ■-■■■■	46	0.017
3	–	**132 S**	975	29.5		85.6	85.8	84.3	0.73	6.9	2.3	6.6	3.2	58	66	**1LE1503-1CC0** ■-■■■■	70	0.029
4	–	**132 M**	975	39		86.8	87.3	86.2	0.73	9.1	2.2	6.2	3	67	75	**1LE1503-1CC2** ■-■■■■	70	0.037
5.5	–	**132 M**	975	54		88	88.1	86.9	0.72	12.5	2.7	6.8	3.4	64	72	**1LE1503-1CC3** ■-■■■■	82	0.046
7.5	–	**160 M**	985	73		89.1	89.7	89	0.81	15	2.3	7.9	3.2	71	79	**1LE1503-1DC2** ■-■■■■	122	0.098
11	–	**160 L**	980	107		90.3	90.7	89.8	0.8	22	2.9	6.8	2.8	66	74	**1LE1503-1DC4** ■-■■■■	147	0.12
15	–	**180 L**	975	147		91.2	92	91.9	0.8	29.5	2.3	5.9	2.8	61	68	**1LE1503-1EC4** ■-■■■■	180	0.19
18.5	–	**200 L**	978	181		91.7	92.5	92.4	0.79	37	2.5	5.6	2.6	64	71	**1LE1503-2AC4** ■-■■■■	213	0.28
22	–	**200 L**	978	215		92.2	92.8	92.3	0.79	43.5	2.5	5.6	2.6	61	68	**1LE1503-2AC5** ■-■■■■	230	0.32
30	–	**225 M**	982	290		92.9	93.6	93.5	0.83	56	2.6	6.6	3	64	77	**1LE1503-2BC2** ■-■■■■	325	0.67
37	–	**250 M**	985	360		93.3	94	94	0.85	67	2.7	7	2.9	62	75	**1LE1503-2CC2** ■-■■■■	405	1
45	–	**280 S**	988	435		93.7	94.3	94.2	0.85	82	3	6.8	2.8	60	74	**1LE1503-2DC0** ■-■■■■	510	1.4
55	–	**280 M**	988	530		94.1	94.5	94.4	0.85	99	3.3	7.2	3	65	79	**1LE1503-2DC2** ■-■■■■	560	1.64
75	–	**315 S**	990	720		94.6	94.9	94.4	0.84	136	2.6	7.5	3.1	63	78	**1LE1503-3AC0** ■-■■■■	750	2.6
90	–	**315 M**	991	870		94.9	95.2	94.9	0.85	161	2.5	6.7	2.8	63	78	**1LE1503-3AC2** ■-■■■■	890	3.1
110	–	**315 L**	991	1060		95.1	95.5	95.3	0.84	199	2.8	7.2	3	63	78	**1LE1503-3AC4** ■-■■■■	990	3.9
132	–	**315 L**	992	1270		95.4	95.7	95.4	0.82	245	3.3	8	3.3	66	81	**1LE1503-3AC5** ■-■■■■	1130	4.48
160	–	**315 L**	992	1540		95.6	95.8	95.5	0.82	295	3.5	8.5	3.6	66	81	**1LE1503-3AC6** ■-■■■■	1260	5.41

Voltages [2]		Version					Order code
50 Hz 230 VΔ/400 VY	60 Hz [1] 460 VY	**Standard**	**2**	**2**			–
50 Hz 400 VΔ/690 VY	60 Hz [1] 460 VΔ	**Standard**	**3**	**4**			–
50 Hz 500 VY		Without additional charge	**2**	**7**			–
50 Hz 500 VΔ		Without additional charge	**4**	**0**			–
For other voltages [1] and more information, see from page 3/104			**9**	**0**			**...**
Types of construction		Version					Order code
Without flange	IM B3 [3]	**Standard**			**A**		–
With flange	IM B5 [3]	With additional charge			**F**		–
For other types of construction and more information, see from page 3/111					■		**...**
Motor protection		Version					Order code
Without		**Standard**				**A**	–
PTC thermistor with 3 temperature sensors		With additional charge				**B**	–
For other motor protection and more information, see from page 3/121						■	**...**
Terminal box position		Version					
Terminal box at top		**Standard**				**4**	
For other terminal box positions and more information, see from page 3/124						■	
Special versions							Order code(s)
Forced-air cooled motors w/o ext. fan/fan cover (IC418)		**1LE1503-....** ■-■■■■ -Z					**F90+...+...+...**
For options, see from page 3/132		**1LE1503-....** ■-■■■■ -Z					**...+...+...+...**

[1] Operating values at rated power for 60 Hz are stored in the SPC.

[2] Parallel supply lines are required in the case of connection to ≤ 240 V. For frame size 315 with connection to ≤ 240 V, due to the high current, a drilled, removable entry plate (order code **R52**) or a larger terminal box (order code **R50**) can be used. Order codes **R52** and **R50** alter the motor dimensions.

[3] Types derived from IM B3 (IM B6/7/8, IM V6 and IM V5), from IM B5 (IM V3 and IM V1) and from IM B14 (IM V19 and IM V18) are possible, provided that no requirement exists for stamping of the type on the rating plate. The basic type IM B3, IM B5, or IM B14 is stamped as standard on the rating plate. If mounted in a different position, the position must be specified to ensure that the condensation drainage holes are positioned correctly.

© Innomotics 2024

Selection and ordering data

P_{rated}, 50 Hz/ P50 kW	P_{rated}, 60 Hz/ P60 [1] kW	Frame size FS	Operating values at rated power n_{rated}, 50 Hz rpm	T_{rated}, 50 Hz Nm	Different IE class 60 Hz/P60	η_{rated}, 50 Hz, 4/4 %	η_{rated}, 50 Hz, 3/4 %	η_{rated}, 50 Hz, 2/4 %	$\cos\varphi_{rated}$, 50 Hz, 4/4	I_{rated}, 50 Hz, 400 V A	T_{LR}/T_{rated}, 50 Hz	I_{LR}/I_{rated}, 50 Hz	T_B/T_{rated}, 50 Hz	L_{pfA}, 50 Hz dB(A)	L_{WA}, 50 Hz dB(A)	Cast-iron series 1LE1503 – *Basic Line* Article No.	$m_{IM\ B3}$ kg	J kgm²
_ Cooling: Self-ventilated (IC411) or with order code F90 forced-air cooled without external fan and fan cover (IC418)																		
_ Efficiency according to IEC 60034-30-1: IE3 Premium Efficiency, service factor (SF) 1.15																		
_ Insulation: Thermal class 155 (temperature class F), IP55 degree of protection, utilization in accordance with thermal class 130 (temperature class B)																		
8-pole: 750rpm at 50 Hz, 900 rpm at 60 Hz [1]																		
0.09	–	**71 M**	650	1.32		44.1	42.8	37.3	0.64	0.46	1.9	2.2	1.9	46	53	**1LE1503-0CD2** ■-■■■■	13	0.00098
0.12	–	**71 M**	660	1.74		50.7	49.9	44.8	0.63	0.54	2.1	2.5	2.1	46	53	**1LE1503-0CD3** ■-■■■■	16	0.0014
0.18	–	**80 M**	705	2.45		58.7	55.8	49.2	0.49	0.9	2.3	3	2.8	48	61	**1LE1503-0DD2** ■-■■■■	18	0.0021
0.25	–	**80 M**	695	3.45		64.1	62.7	57.8	0.57	0.93	1.8	2.9	2.1	52	59	**1LE1503-0DD3** ■-■■■■	22	0.003
0.37	–	**90 S**	685	5.2		69.3	68.3	63.7	0.68	1.13	1.7	2.9	1.8	56	53	**1LE1503-0ED0** ■-■■■■	26	0.0045
0.55	–	**90 L**	695	7.6		73	71.2	66.5	0.67	1.62	2	3.5	2.3	61	68	**1LE1503-0ED4** ■-■■■■	26	0.0045
0.75	–	**100 L**	710	10.1		75	75.7	73.1	0.67	2.1	1.5	3.7	2.1	61	69	**1LE1503-1AD4** ■-■■■■	31	0.0096
1.1	–	**100 L**	710	14.8		77.7	76.4	75.1	0.67	3.05	1.8	4.1	2.3	62	70	**1LE1503-1AD5** ■-■■■■	36	0.013
1.5	–	**1112 M**	720	19.9		79.7	85.6	77.3	0.63	4.15	2.6	5.1	3.1	62	70	**1LE1503-1BD2** ■-■■■■	46	0.028

Voltages [2]		Version					Order code
50 Hz 230 VΔ/400 VY	60 Hz [1] 460 VY	**Standard**	**2**	**2**			–
50 Hz 400 VΔ/690 VY	60 Hz [1] 460 VΔ	**Standard**	**3**	**4**			–
50 Hz 500 VY		Without additional charge	**2**	**7**			–
50 Hz 500 VΔ		Without additional charge	**4**	**0**			–
For other voltages [1] and more information, see from page 3/104			**9**	**0**			**...**
Types of construction		Version					Order code
Without flange	IM B3 [3]	**Standard**		**A**			–
With flange	IM B5 [3]	With additional charge		**F**			–
For other types of construction and more information, see from page 3/111				■			**...**
Motor protection		Version					Order code
Without		**Standard**			**A**		–
PTC thermistor with 3 temperature sensors		With additional charge			**B**		–
For other motor protection and more information, see from page 3/121					■		**...**
Terminal box position		Version					
Terminal box at top		**Standard**				**4**	
For other terminal box positions and more information, see from page 3/124						■	
Special versions							Order code(s)
Forced-air cooled motors w/o ext. fan/fan cover (IC418)		**1LE1503-....** ■-■■■■ -Z					**F90+...+...+...**
For options, see from page 3/132		**1LE1503-....** ■-■■■■ -Z					**...+...+...+...**

[1] Operating values at rated power for 60 Hz are stored in the SPC.

[2] Parallel supply lines are required in the case of connection to ≤ 240 V.
For frame size 315 with connection to ≤ 240 V, due to the high current, a drilled, removable entry plate (order code **R52**) or a larger terminal box (order code **R50**) can be used. Order codes **R52** and **R50** alter the motor dimensions.

[3] Types derived from IM B3 (IM B6/7/8, IM V6 and IM V5), from IM B5 (IM V3 and IM V1) and from IM B14 (IM V19 and IM V18) are possible, provided that no requirement exists for stamping of the type on the rating plate. The basic type IM B3, IM B5, or IM B14 is stamped as standard on the rating plate. If mounted in a different position, the position must be specified to ensure that the condensation drainage holes are positioned correctly.

© Innomotics 2024

Selection and ordering data

P_{rated}, 50 Hz/ P50	P_{rated}, 60 Hz/ P60 [1]	Frame size	Operating values at rated power n_{rated}, 50 Hz	T_{rated}, 50 Hz	Different IE class 60 Hz/P60	η_{rated}, 50 Hz, 4/4	η_{rated}, 50 Hz, 3/4	η_{rated}, 50 Hz, 2/4	$\cos\varphi_{rated}$, 50 Hz, 4/4	I_{rated}, 50 Hz, 400 V	T_{LR}/T_{rated}, 50 Hz	I_{LR}/I_{rated}, 50 Hz	T_B/T_{rated}, 50 Hz	L_{pfA}, 50 Hz	L_{WA}, 50 Hz	Cast-iron series 1LE1603 – *Performance Line* Article No.	$m_{IM\ B3}$	J
kW	kW	FS	rpm	Nm		%	%	%		A				dB(A)	dB(A)		kg	kgm²
_ Cooling: Self-ventilated (IC411) or with order code F90 forced-air cooled without external fan and fan cover (IC418)																		
_ Efficiency according to IEC 60034-30-1: IE3 Premium Efficiency, service factor (SF) 1.15																		
_ Insulation: Thermal class 155 (temperature class F), IP55 degree of protection, utilization in accordance with thermal class 130 (temperature class B)																		
2-pole: 3000 rpm at 50 Hz, 3600 rpm at 60 Hz [1]																		
3	**3.45**	**100 L**	2910	9.8		87.1	87.7	87	0.87	5.7	4.4	9.4	4.5	72	80	**1LE1603-1AA4** ■-■■■■	37	0.0041
4	**4.55**	**112 M**	2945	13		88.1	88.8	87.9	0.89	7.4	2.6	9.1	3.6	73	81	**1LE1603-1BA2** ■-■■■■	41	0.0079
5.5	**6.3**	**132 S**	2945	17.8	IE2	89.2	89.5	88.6	0.88	10.1	2.5	8.9	3.8	69	77	**1LE1603-1CA0** ■-■■■■	66	0.0168
7.5	**8.6**	**132 S**	2950	24.5		90.1	91	91	0.92	13.1	1.9	8.3	3.9	68	80	**1LE1603-1CA1** ■-■■■■	75	0.031
11	**12.6**	**160 M**	2945	35.5	IE2	91.2	91.4	90.6	0.89	19.6	2.5	8.3	3.5	77	85	**1LE1603-1DA2** ■-■■■■	97	0.037
15	**17.3**	**160 M**	2955	48.5		91.9	91.9	90.8	0.86	27.5	3.5	10.2	4.4	77	85	**1LE1603-1DA3** ■-■■■■	104	0.043
18.5	**21.3**	**160 L**	2955	60		92.4	92.8	92.4	0.9	32	2.8	9	4.2	70	82	**1LE1603-1DA4** ■-■■■■	123	0.068
22	**24.5**	**180 M**	2950	71		92.7	93.2	92.9	0.89	38.5	2.3	7.5	3.5	67	80	**1LE1603-1EA2** ■-■■■■	165	0.08
30	**33.5**	**200 L**	2955	97		93.3	93.5	92.9	0.87	53	2.5	7	3.3	67	80	**1LE1603-2AA4** ■-■■■■	220	0.134
37	**41.5**	**200 L**	2955	120	IE2	93.7	94.2	94	0.88	65	2.5	7.1	3.2	67	80	**1LE1603-2AA5** ■-■■■■	245	0.158
45	**51**	**225 M**	2960	145		94	94.5	94.4	0.89	78	2.4	6.9	3.1	73	87	**1LE1603-2BA2** ■-■■■■	315	0.26
55	**62**	**250 M**	2975	177		94.3	94.5	93.9	0.89	95	2.3	6.7	3.1	73	87	**1LE1603-2CA2** ■-■■■■	385	0.46
75	**84**	**280 S**	2975	240	IE2	94.7	94.8	94.1	0.89	128	2.4	6.8	3	74	88	**1LE1603-2DA0** ■-■■■■	510	0.77
90	**101**	**280 M**	2975	290	IE2	95	95.1	94.6	0.9	152	2.4	7.2	3.1	74	88	**1LE1603-2DA2** ■-■■■■	590	0.94
110	**123**	**315 S**	2982	350		95.2	95.4	94.9	0.91	183	2.4	7.1	3.1	75	89	**1LE1603-3AA0** ■-■■■■	750	1.39
132	**148**	**315 M**	2982	425		95.4	95.5	95.2	0.91	220	2.5	7.2	3.1	75	89	**1LE1603-3AA2** ■-■■■■	880	1.6
160	**180**	**315 L**	2982	510	IE2	95.6	95.7	95.2	0.92	265	2.8	7.8	3.3	77	91	**1LE1603-3AA4** ■-■■■■	980	1.9
200	**224**	**315 L**	2982	640		95.8	95.9	95.5	0.92	330	2.5	7.2	3	77	91	**1LE1603-3AA5** ■-■■■■	1150	2.3

Voltages [2]		Version					Order code
50 Hz 230 VΔ/400 VY	60 Hz [1] 460 VY	**Standard**	**2**	**2**			–
50 Hz 400 VΔ/690 VY	60 Hz [1] 460 VΔ	**Standard**	**3**	**4**			–
50 Hz 500 VY		Without additional charge	**2**	**7**			–
50 Hz 500 VΔ		Without additional charge	**4**	**0**			–
For other voltages [1] and more information, see from page 3/104			**9**	**0**			**...**
Types of construction		Version					Order code
Without flange	IM B3 [3]	**Standard**			**A**		–
With flange	IM B5 [3]	With additional charge			**F**		–
For other types of construction and more information, see from page 3/111					■		**...**
Motor protection	Line	Version					Order code
PTC thermistor with 3 temperature sensors		**Standard**				**B**	–
For other motor protection and more information, see from page 3/121						■	**...**
Terminal box position		Version					
Terminal box at top		**Standard**				**4**	
For other terminal box positions and more information, see from page 3/124						■	

Special versions			Order code(s)
Forced-air cooled motors w/o ext. fan/fan cover (IC418)	**1LE1603-....**	■-■■■■ **-Z**	**F90+...+...+...**
For options, see from page 3/132	**1LE1603-....**	■-■■■■ **-Z**	**...+...+...+...**

[1] Operating values at rated power for 60 Hz are stored in the SPC.

[2] Parallel supply lines are required in the case of connection to ≤ 240 V. For frame size 315 with connection to ≤ 240 V, due to the high current, a drilled, removable entry plate (order code **R52**) or a larger terminal box (order code **R50**) can be used. Order codes **R52** and **R50** alter the motor dimensions.

[3] Types derived from IM B3 (IM B6/7/8, IM V6 and IM V5), from IM B5 (IM V3 and IM V1) and from IM B14 (IM V19 and IM V18) are possible, provided that no requirement exists for stamping of the type on the rating plate. The basic type IM B3, IM B5, or IM B14 is stamped as standard on the rating plate. If mounted in a different position, the position must be specified to ensure that the condensation drainage holes are positioned correctly.

© Innomotics 2024

Selection and ordering data

P_{rated}, 50 Hz/ P50	P_{rated}, 60 Hz/ P60 [1]	Frame size	Operating values at rated power n_{rated}, 50 Hz	T_{rated}, 50 Hz	Different IE class 60 Hz/P60	η_{rated}, 50 Hz, 4/4	η_{rated}, 50 Hz, 3/4	η_{rated}, 50 Hz, 2/4	$\cos\varphi_{rated}$, 50 Hz, 4/4	I_{rated}, 50 Hz, 400 V	T_{LR}/T_{rated}, 50 Hz	I_{LR}/I_{rated}, 50 Hz	T_B/T_{rated}, 50 Hz	L_{pfA}, 50 Hz	L_{WA}, 50 Hz	Cast-iron series 1LE1603 – *Performance Line* Article No.	$m_{IM\ B3}$	J
kW	kW	FS	rpm	Nm		%	%	%		A				dB(A)	dB(A)		kg	kgm²
_ Cooling: Self-ventilated (IC411) or with order code F90 forced-air cooled without external fan and fan cover (IC418)																		
_ Efficiency according to IEC 60034-30-1: IE3 Premium Efficiency, service factor (SF) 1.15																		
_ Insulation: Thermal class 155 (temperature class F), IP55 degree of protection, utilization in accordance with thermal class 130 (temperature class B)																		
4-pole: 1500 rpm at 50 Hz, 1800 rpm at 60 Hz [1]																		
2.2	**2.55**	**100 L**	1455	14.4		86.7	87.2	86.3	0.82	4.45	3	8.3	3.8	67	75	**1LE1603-1AB4** ■-■■■■	40	0.0101
3	**3.45**	**100 L**	1450	19.8	IE2	87.7	88.1	87.1	0.8	6.2	3.1	8	3.8	67	75	**1LE1603-1AB5** ■-■■■■	40	0.01
4	**4.55**	**112 M**	1460	26		88.6	89.2	88.6	0.82	7.9	2.4	7.1	3.7	58	70	**1LE1603-1BB2** ■-■■■■	43	0.017
5.5	**6.3**	**132 S**	1470	35.5		89.6	90	89.4	0.82	10.8	2.9	8.5	3.7	64	76	**1LE1603-1CB0** ■-■■■■	74	0.034
7.5	**8.6**	**132 M**	1465	49	IE2	90.4	90.7	90.4	0.8	15	3	8.5	3.8	72	80	**1LE1603-1CB2** ■-■■■■	80	0.0334
11	**12.6**	**160 M**	1470	71		91.4	91.9	91.9	0.82	21	2.5	8	3.5	67	75	**1LE1603-1DB2** ■-■■■■	105	0.0583
15	**17.3**	**160 L**	1465	98	IE2	92.1	92.7	92	0.83	28.5	2.8	7.9	3.4	58	66	**1LE1603-1DB4** ■-■■■■	133	0.089
18.5	**21.3**	**180 M**	1470	120	IE2	92.6	93.1	92.9	0.82	35	2.5	7.2	3.3	66	73	**1LE1603-1EB2** ■-■■■■	166	0.13
22	**25.3**	**180 L**	1470	143		93	93.6	93.6	0.83	41	2.3	6.8	3.3	68	75	**1LE1603-1EB4** ■-■■■■	178	0.14
30	**34.5**	**200 L**	1470	195	IE2	93.6	94	93.7	0.84	55	2.6	7.3	3.1	65	72	**1LE1603-2AB5** ■-■■■■	240	0.24
37	**42.5**	**225 S**	1478	240	IE2	93.9	94.5	94.4	0.86	66	2.5	6.4	2.7	65	78	**1LE1603-2BB0** ■-■■■■	285	0.42
45	**52**	**225 M**	1478	290	IE2	94.2	94.9	95	0.86	80	2.6	6.6	2.6	66	79	**1LE1603-2BB2** ■-■■■■	340	0.52
55	**63**	**250 M**	1482	355	IE2	94.6	95.1	95	0.87	96	2.5	6.8	2.9	66	79	**1LE1603-2CB2** ■-■■■■	420	0.85
75	**86**	**280 S**	1485	480	IE2	95	95.3	95	0.86	133	2.5	6.9	3	69	83	**1LE1603-2DB0** ■-■■■■	570	1.39
90	**104**	**280 M**	1485	580	IE2	95.2	95.5	95.3	0.87	157	2.6	7.2	3	70	84	**1LE1603-2DB2** ■-■■■■	670	1.7
110	**127**	**315 S**	1488	710		95.4	95.8	95.5	0.87	191	2.6	6.8	2.9	70	84	**1LE1603-3AB0** ■-■■■■	760	2.2
132	**152**	**315 M**	1490	850		95.6	95.9	95.9	0.87	230	2.8	7.3	3	73	87	**1LE1603-3AB2** ■-■■■■	960	2.9
160	**184**	**315 L**	1490	1030		95.8	96.1	96.1	0.87	275	2.9	7.3	3.1	73	87	**1LE1603-3AB4** ■-■■■■	990	3.1
200	**230**	**315 L**	1488	1280	IE2	96	96.3	96.1	0.88	340	3.2	7.4	3	73	87	**1LE1603-3AB5** ■-■■■■	1190	3.7

Voltages [2]		Version						Order code
50 Hz 230 VΔ/400 VY	60 Hz [1] 460 VY	**Standard**	**2**	**2**				–
50 Hz 400 VΔ/690 VY	60 Hz [1] 460 VΔ	**Standard**	**3**	**4**				–
50 Hz 500 VY		Without additional charge	**2**	**7**				–
50 Hz 500 VΔ		Without additional charge	**4**	**0**				–
For other voltages [1] and more information, see from page 3/104			**9**	**0**				**...**
Types of construction		Version						Order code
Without flange	IM B3 [3]	**Standard**			**A**			–
With flange	IM B5 [3]	With additional charge			**F**			–
For other types of construction and more information, see from page 3/111					■			**...**
Motor protection	Line	Version						Order code
PTC thermistor with 3 temperature sensors		**Standard**				**B**		–
For other motor protection and more information, see from page 3/121						■		**...**
Terminal box position		Version						
Terminal box at top		**Standard**					**4**	
For other terminal box positions and more information, see from page 3/124							■	
Special versions								Order code(s)
Forced-air cooled motors w/o ext. fan/fan cover (IC418)		**1LE1603- ....** ■-■■■■ -Z						**F90+...+...+...**
For options, see from page 3/132		**1LE1603- ....** ■-■■■■ -Z						**...+...+...+...**

[1] Operating values at rated power for 60 Hz are stored in the SPC.

[2] Parallel supply lines are required in the case of connection to ≤ 240 V.
For frame size 315 with connection to ≤ 240 V, due to the high current, a drilled, removable entry plate (order code **R52**) or a larger terminal box (order code **R50**) can be used. Order codes **R52** and **R50** alter the motor dimensions.

[3] Types derived from IM B3 (IM B6/7/8, IM V6 and IM V5), from IM B5 (IM V3 and IM V1) and from IM B14 (IM V19 and IM V18) are possible, provided that no requirement exists for stamping of the type on the rating plate. The basic type IM B3, IM B5, or IM B14 is stamped as standard on the rating plate. If mounted in a different position, the position must be specified to ensure that the condensation drainage holes are positioned correctly.

© Innomotics 2024

Cast-iron series Innomotics SD 1LE1603 Performance Line – self-ventilated or forced-air cooled

Selection and ordering data

P_{rated}, 50 Hz/ P50 kW	P_{rated}, 60 Hz/ P60 [1] kW	Frame size FS	Operating values at rated power n_{rated}, 50 Hz rpm	T_{rated}, 50 Hz Nm	Different IE class 60 Hz/P60	η_{rated}, 50 Hz, 4/4 %	η_{rated}, 50 Hz, 3/4 %	η_{rated}, 50 Hz, 2/4 %	$\cos\varphi_{rated}$, 50 Hz, 4/4	I_{rated}, 50 Hz, 400 V A	T_{LR}/T_{rated}, 50 Hz	I_{LR}/I_{rated}, 50 Hz	T_B/T_{rated}, 50 Hz	L_{pfA}, 50 Hz dB(A)	L_{WA}, 50 Hz dB(A)	Cast-iron series 1LE1603 – *Performance Line* Article No.	$m_{IM\ B3}$ kg	J kgm²
_ Cooling: Self-ventilated (IC411) or with order code F90 forced-air cooled without external fan and fan cover (IC418)																		
_ Efficiency according to IEC 60034-30-1: IE3 Premium Efficiency, service factor (SF) 1.15																		
_ Insulation: Thermal class 155 (temperature class F), IP55 degree of protection, utilization in accordance with thermal class 130 (temperature class B)																		
6-pole: 1000 rpm at 50 Hz, 1200 rpm at 60 Hz [1]																		
1.5	**–**	**100 L**	970	14.8		82.5	83.1	81.5	0.73	3.6	1.9	5.2	2.8	59	71	**1LE1603-1AC4** ■-■■■■	36	0.011
2.2	**–**	**112 M**	970	21.5		84.3	85	83.9	0.75	5	2.2	5.6	2.8	65	74	**1LE1603-1BC2** ■-■■■■	46	0.017
3	**–**	**132 S**	975	29.5		85.6	85.8	84.3	0.73	6.9	2.3	6.6	3.2	58	66	**1LE1603-1CC0** ■-■■■■	70	0.029
4	**–**	**132 M**	975	39		86.8	87.3	86.2	0.73	9.1	2.2	6.2	3	67	75	**1LE1603-1CC2** ■-■■■■	70	0.037
5.5	**–**	**132 M**	975	54		88	88.1	86.9	0.72	12.5	2.7	6.8	3.4	64	72	**1LE1603-1CC3** ■-■■■■	82	0.046
7.5	**–**	**160 M**	985	73		89.1	89.7	89	0.81	15	2.3	7.9	3.2	71	79	**1LE1603-1DC2** ■-■■■■	122	0.098
11	**–**	**160 L**	980	107		90.3	90.7	89.8	0.8	22	2.9	6.8	2.8	66	74	**1LE1603-1DC4** ■-■■■■	147	0.12
15	**–**	**180 L**	975	147		91.2	92	91.9	0.8	29.5	2.3	5.9	2.8	61	68	**1LE1603-1EC4** ■-■■■■	180	0.19
18.5	**–**	**200 L**	978	181		91.7	92.5	92.4	0.79	37	2.5	5.6	2.6	64	71	**1LE1603-2AC4** ■-■■■■	213	0.28
22	**–**	**200 L**	978	215		92.2	92.8	92.3	0.79	43.5	2.5	5.6	2.6	61	68	**1LE1603-2AC5** ■-■■■■	230	0.32
30	**–**	**225 M**	982	290		92.9	93.6	93.5	0.83	56	2.6	6.6	3	64	77	**1LE1603-2BC2** ■-■■■■	325	0.67
37	**–**	**250 M**	985	360		93.3	94	94	0.85	67	2.7	7	2.9	62	75	**1LE1603-2CC2** ■-■■■■	405	1
45	**–**	**280 S**	988	435		93.7	94.3	94.2	0.85	82	3	6.8	2.8	60	74	**1LE1603-2DC0** ■-■■■■	510	1.4
55	**–**	**280 M**	988	530		94.1	94.5	94.4	0.85	99	3.3	7.2	3	65	79	**1LE1603-2DC2** ■-■■■■	560	1.64
75	**–**	**315 S**	990	720		94.6	94.9	94.4	0.84	136	2.6	7.5	3.1	63	78	**1LE1603-3AC0** ■-■■■■	750	2.6
90	**–**	**315 M**	991	870		94.9	95.2	94.9	0.85	161	2.5	6.7	2.8	63	78	**1LE1603-3AC2** ■-■■■■	890	3.1
110	**–**	**315 L**	991	1060		95.1	95.5	95.3	0.84	199	2.8	7.2	3	63	78	**1LE1603-3AC4** ■-■■■■	990	3.9
132	**–**	**315 L**	992	1270		95.4	95.7	95.4	0.82	245	3.3	8	3.3	66	81	**1LE1603-3AC5** ■-■■■■	1130	4.48
160	**–**	**315 L**	992	1540		95.6	95.8	95.5	0.82	295	3.5	8.5	3.6	66	81	**1LE1603-3AC6** ■-■■■■	1260	5.41

Voltages [2]		Version					Order code
50 Hz 230 VΔ/400 VY	60 Hz [1] 460 VY	**Standard**	**2**	**2**			–
50 Hz 400 VΔ/690 VY	60 Hz [1] 460 VΔ	**Standard**	**3**	**4**			–
50 Hz 500 VY		Without additional charge	**2**	**7**			–
50 Hz 500 VΔ		Without additional charge	**4**	**0**			–
For other voltages [1] and more information, see from page 3/104			**9**	**0**			**...**
Types of construction		Version					Order code
Without flange	IM B3 [3]	**Standard**			**A**		–
With flange	IM B5 [3]	With additional charge			**F**		–
For other types of construction and more information, see from page 3/111					■		**...**
Motor protection		Version					Order code
PTC thermistor with 3 temperature sensors		**Standard**				**B**	–
For other motor protection and more information, see from page 3/121						■	**...**
Terminal box position		Version					
Terminal box at top		**Standard**					**4**
For other terminal box positions and more information, see from page 3/124							■
Special versions							Order code(s)
Forced-air cooled motors w/o ext. fan/fan cover (IC418)		**1LE1603- . . . .** ■-■■■■ -Z					**F90+...+...+...**
For options, see from page 3/132		**1LE1603- . . . .** ■-■■■■ -Z					**...+...+...+...**

[1] Operating values at rated power for 60 Hz are stored in the SPC.

[2] Parallel supply lines are required in the case of connection to ≤ 240 V. For frame size 315 with connection to ≤ 240 V, due to the high current, a drilled, removable entry plate (order code **R52**) or a larger terminal box (order code **R50**) can be used. Order codes **R52** and **R50** alter the motor dimensions.

[3] Types derived from IM B3 (IM B6/7/8, IM V6 and IM V5), from IM B5 (IM V3 and IM V1) and from IM B14 (IM V19 and IM V18) are possible, provided that no requirement exists for stamping of the type on the rating plate. The basic type IM B3, IM B5, or IM B14 is stamped as standard on the rating plate. If mounted in a different position, the position must be specified to ensure that the condensation drainage holes are positioned correctly.

© Innomotics 2024

Selection and ordering data

P_{rated}, 50 Hz/ P50 kW	P_{rated}, 60 Hz/ P60 [1] kW	Frame size FS	Operating values at rated power n_{rated}, 50 Hz rpm	T_{rated}, 50 Hz Nm	Different IE class 60 Hz/P60	η_{rated}, 50 Hz, 4/4 %	η_{rated}, 50 Hz, 3/4 %	η_{rated}, 50 Hz, 2/4 %	$\cos\varphi_{rated}$, 50 Hz, 4/4	I_{rated}, 50 Hz, 400 V A	T_{LR}/T_{rated}, 50 Hz	I_{LR}/I_{rated}, 50 Hz	T_B/T_{rated}, 50 Hz	L_{pfA}, 50 Hz dB(A)	L_{WA}, 50 Hz dB(A)	Cast-iron series 1LE1603 – *Performance Line* Article No.	$m_{IM\ B3}$ kg	J kgm²
_ Cooling: Self-ventilated (IC411) or with order code F90 forced-air cooled without external fan and fan cover (IC418)																		
_ Efficiency according to IEC 60034-30-1: IE3 Premium Efficiency, service factor (SF) 1.15																		
_ Insulation: Thermal class 155 (temperature class F), IP55 degree of protection, utilization in accordance with thermal class 130 (temperature class B)																		
8-pole: 750 rpm at 50 Hz, 900 rpm at 60 Hz [1]																		
0.75	**–**	**100 L**	710	10.1		75	75.7	73.1	0.67	2.1	1.5	3.7	2.1	61	69	**1LE1603-1AD4** ■-■■■■	31	0.0096
1.1	**–**	**100 L**	710	14.8		77.7	76.4	75.1	0.67	3.05	1.8	4.1	2.3	62	70	**1LE1603-1AD5** ■-■■■■	36	0.013
1.5	**–**	**112 M**	720	19.9		79.7	85.6	77.3	0.63	4.15	2.6	5.1	3.1	62	70	**1LE1603-1BD2** ■-■■■■	46	0.028
2.2	**–**	**132 S**	725	29		81.9	82.5	80.9	0.71	5.3	1.9	5	2.5	65	73	**1LE1603-1CD0** ■-■■■■	60	0.046
3	**–**	**132 M**	725	39.5		83.5	83.8	82.2	0.72	7.1	2	5.2	2.5	70	78	**1LE1603-1CD2** ■-■■■■	78	0.061
4	**–**	**160 M**	730	52		84.8	86	85.5	0.74	9.1	1.6	4.7	2.1	62.5	70.5	**1LE1603-1DD2** ■-■■■■	98	0.076
5.5	**–**	**160 M**	730	72		86.2	87	86.3	0.73	12.4	2	5.5	2.4	68	76	**1LE1603-1DD3** ■-■■■■	109	0.1
7.5	**–**	**160 L**	730	98		87.3	87.9	86.9	0.73	16.9	2.3	5.8	2.7	70	78	**1LE1603-1DD4** ■-■■■■	117	0.13
11	**–**	**180 L**	725	145		88.6	89.6	89	0.74	24	2.1	5.1	2.4	67	74	**1LE1603-1ED4** ■-■■■■	187	0.267
15	**–**	**200 L**	730	196		89.6	90.1	89.4	0.73	33.5	3	6.8	3.7	57	70	**1LE1603-2AD5** ■-■■■■	249	0.42
18.5	**–**	**225 S**	732	240		90.1	90.6	90	0.75	39.5	2.5	5.9	3	56	70	**1LE1603-2BD0** ■-■■■■	270	0.5
22	**–**	**225 M**	732	285		90.6	91.4	91.2	0.77	45.5	2.6	5.9	2.9	56	70	**1LE1603-2BD2** ■-■■■■	280	0.55
30	**–**	**250 M**	735	390		91.3	91.8	91.5	0.79	60	2.6	6.1	3	60	74	**1LE1603-2CD2** ■-■■■■	370	0.86
37	**–**	**280 S**	736	480		91.8	92.5	92.4	0.78	75	2.3	5.4	2.4	63	77	**1LE1603-2DD0** ■-■■■■	460	1.1
45	**–**	**280 M**	738	580		92.2	92.8	92.6	0.8	88	2.5	5.9	2.5	65	79	**1LE1603-2DD2** ■-■■■■	550	1.6
55	**–**	**315 S**	740	710		92.5	92.9	92.6	0.81	106	2.3	6	2.7	66	81	**1LE1603-3AD0** ■-■■■■	650	2
75	**–**	**315 M**	738	970		93.1	93.5	93.3	0.81	144	2.3	5.9	2.7	69	84	**1LE1603-3AD2** ■-■■■■	720	2.5
90	**–**	**315 L**	740	1160		93.4	94.2	94.3	0.83	168	2.2	5.8	2.5	71	85	**1LE1603-3AD4** ■-■■■■	860	3.1
110	**–**	**315 L**	740	1420		93.7	94.2	94.1	0.82	205	2.7	6.7	2.9	74	88	**1LE1603-3AD5** ■-■■■■	980	3.9
132	**–**	**315 L**	740	1700		94	94.4	94.1	0.81	250	2.9	7.2	3.3	76	90	**1LE1603-3AD6** ■-■■■■	1160	4.5

Voltages [2]		Version					Order code
50 Hz 230 VΔ/400 VY	60 Hz [1] 460 VY	**Standard**	**2**	**2**			–
50 Hz 400 VΔ/690 VY	60 Hz [1] 460 VΔ	**Standard**	**3**	**4**			–
50 Hz 500 VY		Without additional charge	**2**	**7**			–
50 Hz 500 VΔ		Without additional charge	**4**	**0**			–
For other voltages [1] and more information, see from page 3/104			**9**	**0**			**...**
Types of construction		Version					Order code
Without flange	IM B3 [3]	**Standard**		**A**			–
With flange	IM B5 [3]	With additional charge		**F**			–
For other types of construction and more information, see from page 3/111				■			**...**
Motor protection		Version					Order code
PTC thermistor with 3 temperature sensors		**Standard**			**B**		–
For other motor protection and more information, see from page 3/121					■		**...**
Terminal box position		Version					
Terminal box at top		**Standard**				**4**	
For other terminal box positions and more information, see from page 3/124						■	
Special versions							Order code(s)
Forced-air cooled motors w/o ext. fan/fan cover (IC418)		**1LE1603- . . . .** ■-■■■■ -Z					**F90+. . .+. . .+. . .**
For options, see from page 3/132		**1LE1603- . . . .** ■-■■■■ -Z					**. . .+. . .+. . .+. . .**

[1] Operating values at rated power for 60 Hz are stored in the SPC.

[2] Parallel supply lines are required in the case of connection to ≤ 240 V. For frame size 315 with connection to ≤ 240 V, due to the high current, a drilled, removable entry plate (order code **R52**) or a larger terminal box (order code **R50**) can be used. Order codes **R52** and **R50** alter the motor dimensions.

[3] Types derived from IM B3 (IM B6/7/8, IM V6 and IM V5), from IM B5 (IM V3 and IM V1) and from IM B14 (IM V19 and IM V18) are possible, provided that no requirement exists for stamping of the type on the rating plate. The basic type IM B3, IM B5, or IM B14 is stamped as standard on the rating plate. If mounted in a different position, the position must be specified to ensure that the condensation drainage holes are positioned correctly.

© Innomotics 2024

Selection and ordering data

P_{rated}, 50 Hz/ P50 kW	P_{rated}, 60 Hz/ P60 kW	Frame size FS	Operating values at rated power n_{rated}, 50 Hz rpm	T_{rated}, 50 Hz Nm	Different IE class 60 Hz/P60	η_{rated}, 50 Hz, 4/4 %	η_{rated}, 50 Hz, 3/4 %	η_{rated}, 50 Hz, 2/4 %	$\cos\varphi_{rated}$, 50 Hz, 4/4	I_{rated}, 50 Hz, 400 V A	T_{LR}/T_{rated}, 50 Hz	I_{LR}/I_{rated}, 50 Hz	T_B/T_{rated}, 50 Hz	L_{pfA}, 50 Hz dB(A)	L_{WA}, 50 Hz dB(A)	Cast-iron series 1LE1503 – *Basic Line* Article No.	$m_{IM\ B3}$ kg	J kgm²
_ Cooling: Self-ventilated (IC411) or with order code F90 forced-air cooled without external fan and fan cover (IC418)																		
_ Efficiency according to IEC 60034-30-1: IE3 Premium Efficiency, service factor (SF) 1.15																		
_ Insulation: Thermal class 155 (temperature class F), IP55 degree of protection, utilization in accordance with thermal class 130 (temperature class B)																		
2-pole: 3000 rpm at 50 Hz, 3600 rpm at 60 Hz [1]																		
1.5	**1,75**	**80 M**	2865	5		84.2	84.8	84.4	0.84	3.05	3.2	8	3.7	69	77	**1LE1503-0DA6** ■-■■■■	22	0.0015
3	**3,45**	**90 L**	2920	9.8	IE2	87.1	87.2	85.9	0.84	5.9	4.4	10.2	4.6	71	78	**1LE1503-0EA6** ■-■■■■	31	0.00301
4	**4,55**	**100 L**	2910	13.1		88.1	88.9	87.8	0.83	7.9	3.5	8.9	4.6	77	85	**1LE1503-1AA6** ■-■■■■	34	0.00462
5.5	**6,3**	**112 M**	2950	17.8		89.2	89.5	88.8	0.86	10.4	2.7	8.8	3.9	69	77	**1LE1503-1BA6** ■-■■■■	43	0.00959
11	**12,6**	**132 M**	2940	35.5		91.2	92.1	92.3	0.89	19.6	2.8	9.8	4.1	68	76	**1LE1503-1CA6** ■-■■■■	78	0.023
15	**17,3**	**132 M**	2960	48.5		91.9	92	91.1	0.84	28	2.9	9.1	4.4	73	81	**1LE1503-1CA7** ■-■■■■	83	0.0321
22	**25.3**	**160 L**	2945	71		92.7	92.8	92.2	0.91	37.5	3.5	9.9	4.4	76	84	**1LE1503-1DA6** ■-■■■■	137	0.0603
30	**33.5**	**180 L**	2950	97		93.3	93.6	93.1	0.88	53	2.6	8.6	3.9	67	80	**1LE1503-1EA6** ■-■■■■	175	0.094
45	**51**	**200 L**	2950	146		94	94.5	93.9	0.87	79	2.5	7.1	3.2	77	77	**1LE1503-2AA6** ■-■■■■	245	0.17
55	**62**	**225 M**	2965	177		94.3	94.6	94.4	0.88	96	2.8	8	3.7	76	89	**1LE1503-2BA6** ■-■■■■	370	0.31
75	**84**	**250 M**	2970	240	IE2	94.7	94.9	94.5	0.9	127	2.2	6.8	2.9	78	92	**1LE1503-2CA6** ■-■■■■	470	0.56
110	**123**	**280 M**	2975	355		95.2	95.4	95.1	0.91	183	2.5	7.7	3.2	78	92	**1LE1503-2DA6** ■-■■■■	670	1.1
4-pole: 1500 rpm at 50 Hz. 1800 rpm at 60 Hz [1]																		
1.1	**1,27**	**80 M**	1445	7.3	IE2	84.1	84.6	83.6	0.78	2.4	3	7	3.5	63	70	**1LE1503-0DB6** ■-■■■■	24	0.00329
4	**4,55**	**100 L**	1455	26.5		88.6	89.4	88.8	0.81	8	2.9	7.5	3.7	67	75	**1LE1503-1AB6** ■-■■■■	53	0.0149
5,5	**6,3**	**112 M**	1460	36		89.6	89.9	89.4	0.8	11.1	3.2	8	4.1	67	75	**1LE1503-1BB6** ■-■■■■	60	0.0186
11	**12.6**	**132 M**	1470	71		91.4	91.8	91.1	0.79	22	2.8	8.3	3.8	71	79	**1LE1503-1CB6** ■-■■■■	99	0.041
18.5	**21.3**	**160 L**	1480	119	IE2	92.6	92.7	91.8	0.76	38	2.7	8.1	3.8	62	75	**1LE1503-1DB6** ■-■■■■	126	0.099
30	**34.5**	**180 L**	1470	195	IE2	93.6	94	93.8	0.79	59	3	8.2	3.8	66	74	**1LE1503-1EB6** ■-■■■■	191	0.173
37	**42.5**	**200 L**	1475	240	IE2	93.9	94	93.6	0.81	70	3.1	8.1	3.5	65	72	**1LE1503-2AB6** ■-■■■■	258	0.275
55	**63**	**225 M**	1478	355	IE2	94.6	95.3	95.5	0.86	98	2.8	6.5	2.7	70	83	**1LE1503-2BB6** ■-■■■■	405	0.65
75	**86**	**250 M**	1486	480		95	95.2	94.8	0.85	134	3	7.9	3.4	70	83	**1LE1503-2CB6** ■-■■■■	510	1.1
110	**127**	**280 M**	1486	710	IE2	95.4	95.5	95	0.85	196	3	8.3	3.4	73	87	**1LE1503-2DB6** ■-■■■■	720	1.8

Voltages [2]		Version					Order code
50 Hz 230 VΔ/400 VY	60 Hz [1] 460 VY	**Standard**	**2**	**2**			–
50 Hz 400 VΔ/690 VY	60 Hz [1] 460 VΔ	**Standard**	**3**	**4**			–
50 Hz 500 VY		Without additional charge	**2**	**7**			–
50 Hz 500 VΔ		Without additional charge	**4**	**0**			–
For other voltages [1] and more information, see from page 3/104			**9**	**0**			**...**
Types of construction		Version					Order code
Without flange	IM B3 [3]	**Standard**			**A**		–
With flange	IM B5 [3]	With additional charge			**F**		–
With flange	IM B14 [3]	With additional charge			**K**		–
For other types of construction and more information, see from page 3/111					■		**...**
Motor protection		Version					Order code
Without		**Standard**				**A**	–
PTC thermistor with 3 temperature sensors		With additional charge				**B**	–
For other motor protection and more information, see from page 3/121						■	**...**
Terminal box position		Version					
Terminal box at top		**Standard**				**4**	
For other terminal box positions and more information, see from page 3/124						■	
Special versions							Order code(s)
For options, see from page 3/132							**1LE1503-....** ■-■■■■ **-Z** ...+...+...+...

[1] Operating values at rated power for 60 Hz are stored in the SPC.

[2] Parallel supply lines are required in the case of connection to ≤ 240 V. For frame size 315 with connection to ≤ 240 V, due to the high current, a drilled, removable entry plate (order code **R52**) or a larger terminal box (order code **R50**) can be used. Order codes **R52** and **R50** alter the motor dimensions.

[3] Types derived from IM B3 (IM B6/7/8, IM V6 and IM V5), from IM B5 (IM V3 and IM V1) and from IM B14 (IM V19 and IM V18) are possible, provided that no requirement exists for stamping of the type on the rating plate. The basic type IM B3, IM B5, or IM B14 is stamped as standard on the rating plate. If mounted in a different position, the position must be specified to ensure that the condensation drainage holes are positioned correctly.

© Innomotics 2024

Selection and ordering data

P_{rated}, 50 Hz/ P50 kW	P_{rated}, 60 Hz/ P60 kW	Frame size FS	Operating values at rated power n_{rated}, 50 Hz rpm	T_{rated}, 50 Hz Nm	Different IE class 60 Hz/P60	η_{rated}, 50 Hz, 4/4 %	η_{rated}, 50 Hz, 3/4 %	η_{rated}, 50 Hz, 2/4 %	$\cos\varphi_{rated}$, 50 Hz, 4/4	I_{rated}, 50 Hz, 400 V A	T_{LR}/T_{rated}, 50 Hz	I_{LR}/I_{rated}, 50 Hz	T_B/T_{rated}, 50 Hz	L_{pfA}, 50 Hz dB(A)	L_{WA}, 50 Hz dB(A)	Cast-iron series 1LE1503 – *Basic Line* Article No. ▲ New	$m_{IM\ B3}$ kg	J kgm²
_ Cooling: Self-ventilated (IC411) or with order code F90 forced-air cooled without external fan and fan cover (IC418)																		
_ Efficiency according to IEC 60034-30-1: IE3 Premium Efficiency, service factor (SF) 1.15																		
_ Insulation: Thermal class 155 (temperature class F), IP55 degree of protection, utilization in accordance with thermal class 130 (temperature class B)																		
6-pole: 1000 rpm at 50 Hz. 1200 rpm at 60 Hz [1]																		
3	**–**	**112 M**	965	29.5	IE2	85.6	86.8	86.6	0.74	6.8	2.3	5.8	2.7	68	76	▲ **1LE1503-1BC6** ■-■■■■	55	0.01768
18.5	**–**	**180 L**	975	181		91.7	92.3	91.9	0.77	38	2.6	6.9	3.3	68	80	**1LE1503-1EC6** ■-■■■■	185	0.247
30	**–**	**200 L**	978	295		92.9	93.6	93.7	0.79	59	2.8	6.5	2.8	61	68	**1LE1503-2AC6** ■-■■■■	264	0.434
37	**–**	**225 M**	982	360		93.3	93.9	93.7	0.81	71	3	7.1	3.2	65	79	**1LE1503-2BC6** ■-■■■■	395	0.84
45	**–**	**250 M**	986	435		93.7	94.3	94.2	0.84	83	2.8	7	2.9	68	81	**1LE1503-2CC6** ■-■■■■	480	1.3
75	**–**	**280 M**	988	720		94.6	95	94.8	0.83	138	3.7	8.6	3.3	68	81	**1LE1503-2DC6** ■-■■■■	630	1.9
8-pole: 750 rpm at 50 Hz. 900 rpm at 60 Hz [1]																		
18,5	**–**	**200 L**	725	245		90.1	90.5	89.5	0.71	41.5	3.1	6.7	3.7	60	68	**1LE1503-2AD6** ■-■■■■	256	0.405
30	**–**	**225 M**	732	390		91.3	92.1	92	0.76	62	2.8	6.1	3.1	60	74	**1LE1503-2BD6** ■-■■■■	330	0.67
37	**–**	**250 M**	730	485		91.8	92.8	93.1	0.81	72	2.3	5.7	2.6	61	75	**1LE1503-2CD6** ■-■■■■	405	1
55	**–**	**280 M**	736	710		92.5	93.3	92.6	0.8	107	2.5	5.9	2.5	70	81	**1LE1503-2DD6** ■-■■■■	550	1.6

Voltages [2]		Version					Order code
50 Hz 230 VΔ/400 VY	60 Hz [1] 460 VY	**Standard**	**2**	**2**			–
50 Hz 400 VΔ/690 VY	60 Hz [1] 460 VΔ	**Standard**	**3**	**4**			–
50 Hz 500 VY		Without additional charge	**2**	**7**			–
50 Hz 500 VΔ		Without additional charge	**4**	**0**			–
For other voltages [1] and more information, see from page 3/104			**9**	**0**			**...**
Types of construction		Version					Order code
Without flange	IM B3 [3]	**Standard**			**A**		–
With flange	IM B5 [3]	With additional charge			**F**		–
With flange	IM B14 [3]	With additional charge			**K**		–
For other types of construction and more information, see from page 3/111					■		**...**
Motor protection		Version					Order code
Without		**Standard**				**A**	–
PTC thermistor with 3 temperature sensors		With additional charge				**B**	–
For other motor protection and more information, see from page 3/121						■	**...**
Terminal box position		Version					
Terminal box at top		**Standard**					**4**
For other terminal box positions and more information, see from page 3/124							■
Special versions							Order code(s)
For options, see from page 3/132			**1LE1503- ....**	■-■■■■			**-Z** ...+...+...+...

[1] Operating values at rated power for 60 Hz are stored in the SPC.

[2] Parallel supply lines are required in the case of connection to ≤ 240 V. For frame size 315 with connection to ≤ 240 V, due to the high current, a drilled, removable entry plate (order code **R52**) or a larger terminal box (order code **R50**) can be used. Order codes **R52** and **R50** alter the motor dimensions.

[3] Types derived from IM B3 (IM B6/7/8, IM V6 and IM V5), from IM B5 (IM V3 and IM V1) and from IM B14 (IM V19 and IM V18) are possible, provided that no requirement exists for stamping of the type on the rating plate. The basic type IM B3, IM B5, or IM B14 is stamped as standard on the rating plate. If mounted in a different position, the position must be specified to ensure that the condensation drainage holes are positioned correctly.

© Innomotics 2024

Selection and ordering data

P_{rated}, 50 Hz/ P50 kW	P_{rated}, 60 Hz/ P60 kW	Frame size FS	Operating values at rated power n_{rated}, 50 Hz rpm	T_{rated}, 50 Hz Nm	Different IE class 60 Hz/P60	η_{rated}, 50 Hz, 4/4 %	η_{rated}, 50 Hz, 3/4 %	η_{rated}, 50 Hz, 2/4 %	$\cos\varphi_{rated}$, 50 Hz, 4/4	I_{rated}, 50 Hz, 400 V A	T_{LR}/T_{rated}, 50 Hz	I_{LR}/I_{rated}, 50 Hz	T_B/T_{rated}, 50 Hz	L_{pfA}, 50 Hz dB(A)	L_{WA}, 50 Hz dB(A)	Cast-iron series 1LE1603 – *Performance Line* Article No. ▲ New	$m_{IM\ B3}$ kg	J kgm²
_ Cooling: Self-ventilated (IC411) or with order code F90 forced-air cooled without external fan and fan cover (IC418)																		
_ Efficiency according to IEC 60034-30-1: IE3 Premium Efficiency, service factor (SF) 1.15																		
_ Insulation: Thermal class 155 (temperature class F), IP55 degree of protection, utilization in accordance with thermal class 130 (temperature class B)																		
2-pole: 3000 rpm at 50 Hz, 3600 rpm at 60 Hz [1]																		
4	**4,55**	**100 L**	2910	13.1		88.1	88.9	87.8	0.83	7.9	3.5	8.9	4.6	77	85	**1LE1603-1AA6** ■-■■■■	34	0.00462
5.5	**6,3**	**112 M**	2950	17.8		89.2	89.5	88.8	0.86	10.4	2.7	8.8	3.9	69	77	**1LE1603-1BA6** ■-■■■■	43	0.00959
11	**12,6**	**132 M**	2940	35.5		91.2	92.1	92.3	0.89	19.6	2.8	9.8	4.1	68	76	**1LE1603-1CA6** ■-■■■■	78	0.023
15	**17,3**	**132 M**	2960	48.5		91.9	92	91.1	0.84	28	2.9	9.1	4.4	73	81	**1LE1603-1CA7** ■-■■■■	83	0.0321
22	**25.3**	**160 L**	2945	71		92.7	92.8	92.2	0.91	37.5	3.5	9.9	4.4	76	84	**1LE1603-1DA6** ■-■■■■	137	0.0603
30	**33.5**	**180 L**	2950	97		93.3	93.6	93.1	0.88	53	2.6	8.6	3.9	67	80	**1LE1603-1EA6** ■-■■■■	175	0.094
45	**51**	**200 L**	2950	146		94	94.5	93.9	0.87	79	2.5	7.1	3.2	77	77	**1LE1603-2AA6** ■-■■■■	245	0.17
55	**62**	**225 M**	2965	177		94.3	94.6	94.4	0.88	96	2.8	8	3.7	76	89	**1LE1603-2BA6** ■-■■■■	370	0.31
75	**84**	**250 M**	2970	240	IE2	94.7	94.9	94.5	0.9	127	2.2	6.8	2.9	78	92	**1LE1603-2CA6** ■-■■■■	470	0.56
110	**123**	**280 M**	2975	355		95.2	95.4	95.1	0.91	183	2.5	7.7	3.2	78	92	**1LE1603-2DA6** ■-■■■■	670	1.1
4-pole: 1500 rpm at 50 Hz, 1800 rpm at 60 Hz [1]																		
4	**4,55**	**100 L**	1455	26.5		88.6	89.4	88.8	0.81	8	2.9	7.5	3.7	67	75	**1LE1603-1AB6** ■-■■■■	53	0.0149
5,5	**6,3**	**112 M**	1460	36		89.6	89.9	89.4	0.8	11.1	3.2	8	4.1	67	75	**1LE1603-1BB6** ■-■■■■	60	0.0186
11	**12.6**	**132 M**	1470	71		91.4	91.8	91.1	0.79	22	2.8	8.3	3.8	71	79	**1LE1603-1CB6** ■-■■■■	99	0.041
18.5	**21.3**	**160 L**	1480	119	IE2	92.6	92.7	91.8	0.76	38	2.7	8.1	3.8	62	75	**1LE1603-1DB6** ■-■■■■	126	0.099
30	**34.5**	**180 L**	1470	195	IE2	93.6	94	93.8	0.79	59	3	8.2	3.8	66	74	**1LE1603-1EB6** ■-■■■■	191	0.173
37	**42.5**	**200 L**	1475	240	IE2	93.9	94	93.6	0.81	70	3.1	8.1	3.5	65	72	**1LE1603-2AB6** ■-■■■■	258	0.275
55	**63**	**225 M**	1478	355	IE2	94.6	95.3	95.5	0.86	98	2.8	6.5	2.7	70	83	**1LE1603-2BB6** ■-■■■■	405	0.65
75	**86**	**250 M**	1486	480		95	95.2	94.8	0.85	134	3	7.9	3.4	70	83	**1LE1603-2CB6** ■-■■■■	510	1.1
110	**127**	**280 M**	1486	710	IE2	95.4	95.5	95	0.85	196	3	8.3	3.4	73	87	**1LE1603-2DB6** ■-■■■■	720	1.8
6-pole: 1000 rpm at 50 Hz, 1200 rpm at 60 Hz [1]																		
3	**–**	**112 M**	965	29.5	IE2	85.6	86.8	86.6	0.74	6.8	2.3	5.8	2.7	68	76	▲ **1LE1603-1BC6** ■-■■■■	55	0.01768
18.5	**–**	**180 L**	975	181		91.7	92.3	91.9	0.77	38	2.6	6.9	3.3	68	80	**1LE1603-1EC6** ■-■■■■	185	0.247
30	**–**	**200 L**	978	295		92.9	93.6	93.7	0.79	59	2.8	6.5	2.8	61	68	**1LE1603-2AC6** ■-■■■■	264	0.434
37	**–**	**225 M**	982	360		93.3	93.9	93.7	0.81	71	3	7.1	3.2	65	79	**1LE1603-2BC6** ■-■■■■	395	0.84
45	**–**	**250 M**	986	435		93.7	94.3	94.2	0.84	83	2.8	7	2.9	68	81	**1LE1603-2CC6** ■-■■■■	480	1.3
75	**–**	**280 M**	988	720		94.6	95	94.8	0.83	138	3.7	8.6	3.3	68	81	**1LE1603-2DC6** ■-■■■■	630	1.9
8-pole: 750 rpm at 50 Hz, 900 rpm at 60 Hz [1]																		
18,5	**–**	**200 L**	725	245		90.1	90.5	89.5	0.71	41.5	3.1	6.7	3.7	60	68	**1LE1603-2AD6** ■-■■■■	256	0.405
30	**–**	**225 M**	732	390		91.3	92.1	92	0.76	62	2.8	6.1	3.1	60	74	**1LE1603-2BD6** ■-■■■■	330	0.67
37	**–**	**250 M**	730	485		91.8	92.8	93.1	0.81	72	2.3	5.7	2.6	61	75	**1LE1603-2CD6** ■-■■■■	405	1
55	**–**	**280 M**	736	710		92.5	93.3	92.6	0.8	107	2.5	5.9	2.5	70	81	**1LE1603-2DD6** ■-■■■■	550	1.6

Voltages [2]		Version					Order code
50 Hz 230 VΔ/400 VY	60 Hz [1] 460 VY	**Standard**	**2**	**2**			–
50 Hz 400 VΔ/690 VY	60 Hz [1] 460 VΔ	**Standard**	**3**	**4**			–
50 Hz 500 VY		Without additional charge	**2**	**7**			–
50 Hz 500 VΔ		Without additional charge	**4**	**0**			–
For other voltages [1] and more information, see from page 3/104			**9**	**0**			...
Types of construction		Version					Order code
Without flange	IM B3 [3]	**Standard**			**A**		–
With flange	IM B5 [3]	With additional charge			**F**		–
With flange	IM B14 [3]	With additional charge			**K**		–
For other types of construction a60nd more information, see from page 3/111					■		...
Motor protection		Version					Order code
PTC thermistor with 3 temperature sensors		**Standard**				**B**	–
For other motor protection and more information, see from page 3/121						■	...
Terminal box position		Version					
Terminal box at top		**Standard**					**4**
For other terminal box positions and more information, see from page 3/124							■
Special versions							Order code(s)
For options, see from page 3/132			**1LE1603-....**	■-■■■■			-Z ...+...+...+...

[1] Operating values at rated power for 60 Hz are stored in the SPC.

[2] Parallel supply lines are required in the case of connection to ≤ 240 V. For frame size 315 with connection to ≤ 240 V, due to the high current, a drilled, removable entry plate (order code **R52**) or a larger terminal box (order code **R50**) can be used. Order codes **R52** and **R50** alter the motor dimensions.

[3] Types derived from IM B3 (IM B6/7/8, IM V6 and IM V5), from IM B5 (IM V3 and IM V1) and from IM B14 (IM V19 and IM V18) are possible, provided that no requirement exists for stamping of the type on the rating plate. The basic type IM B3, IM B5, or IM B14 is stamped as standard on the rating plate. If mounted in a different position, the position must be specified to ensure that the condensation drainage holes are positioned correctly.

© Innomotics 2024

Selection and ordering data

P_{rated}, 50 Hz/ P50 kW	P_{rated}, 60 Hz/ P60 [1] kW	Frame size FS	Operating values at rated power n_{rated}, 50 Hz rpm	T_{rated}, 50 Hz Nm	Different IE class 60 Hz/P60	η_{rated}, 50 Hz, 4/4 %	η_{rated}, 50 Hz, 3/4 %	η_{rated}, 50 Hz, 2/4 %	$\cos\varphi_{rated}$, 50 Hz, 4/4	I_{rated}, 50 Hz, 400 V A	T_{LR}/T_{rated}, 50 Hz	I_{LR}/I_{rated}, 50 Hz	T_B/T_{rated}, 50 Hz	L_{pfA}, 50 Hz dB(A)	L_{WA}, 50 Hz dB(A)	Cast-iron series 1LE1583 Article No.	$m_{IM\,B3}$ kg	J kgm²
_ Cooling: Self-ventilated (IC411) or with order code F90 forced-air cooled without external fan and fan cover (IC418)																		
_ Efficiency according to IEC 60034-30-1: IE3 Premium Efficiency, service factor (SF) 1.0																		
_ Insulation: Thermal class 155 (temperature class F), IP55 degree of protection, utilization in accordance with thermal class 130 (temperature class B)																		
_ Optional and suitable for converter operation; U_{line} ≤ 690 V - IVIC-C premiuminsulation system																		
2-pole: 3000 rpm at 50 Hz, 3600 rpm at 60 Hz [1]																		
3	**3.45**	**100 L**	2920	9.8		87.1	87.8	87.4	0.88	5.6	3.2	8.1	4.6	67	79	**1LE1583-1AA4** ■-■■■■	37	0.0054
4	**4.55**	**112 M**	2950	12.9		88.1	88.7	88.2	0.89	7.4	2.5	9.2	3.4	69	81	**1LE1583-1BA2** ■-■■■■	43	0.012
5.5	**6.3**	**132 S**	2960	17.7		89.2	89.6	88.9	0.91	9.8	2.1	9.7	3.6	72	79	**1LE1583-1CA0** ■-■■■■	75	0.031
7.5	**8.6**	**132 S**	2950	24.5		90.1	90.9	90.7	0.91	13.2	2.1	9	3.3	68	80	**1LE1583-1CA1** ■-■■■■	75	0.031
11	**12.6**	**160 M**	2955	35.5		91.2	91.5	90.7	0.9	19.3	2.5	8.5	3.4	79	86	**1LE1583-1DA2** ■-■■■■	111	0.061
15	**17.3**	**160 M**	2960	48.5		91.9	91.9	91	0.86	27.5	2.8	9.5	4	70	82	**1LE1583-1DA3** ■-■■■■	111	0.061
18.5	**21.3**	**160 L**	2960	60		92.4	92.9	92.6	0.92	31.5	2.8	9.7	3.8	78	85	**1LE1583-1DA4** ■-■■■■	131	0.073
22	**24.5**	**180 M**	2950	71		92.7	93	92.4	0.89	38.5	2.3	7.5	3.5	67	80	**1LE1583-1EA2** ■-■■■■	165	0.08
30	**33.5**	**200 L**	2955	97		93.3	93.6	93.3	0.86	54	2.6	7.5	3.3	68	81	**1LE1583-2AA4** ■-■■■■	220	0.134
37	**41.5**	**200 L**	2950	120		93.7	93.9	93.5	0.88	65	2.6	7.8	3.4	68	81	**1LE1583-2AA5** ■-■■■■	245	0.158
45	**51**	**225 M**	2960	145		94	94.5	94.4	0.89	78	2.4	6.9	3.1	73	87	**1LE1583-2BA2** ■-■■■■	315	0.265
55	**62**	**250 M**	2975	177		94.3	94.5	94	0.89	95	2.1	7	3	73	87	**1LE1583-2CA2** ■-■■■■	385	0.463
75	**84**	**280 S**	2980	240		94.7	94.8	94.1	0.89	128	2.6	8.7	3.5	73	87	**1LE1583-2DA0** ■-■■■■	610	0.926
90	**101**	**280 M**	2980	290		95	95.2	94.8	0.9	152	2.7	8.4	3.2	77	91	**1LE1583-2DA2** ■-■■■■	620	0.934
110	**123**	**315 S**	2982	350		95.2	95.4	95	0.91	183	2.2	7.5	2.9	75	89	**1LE1583-3AA0** ■-■■■■	750	1.37
132	**148**	**315 M**	2984	420		95.4	95.6	95.3	0.9	220	2.7	8.4	3	77	91	**1LE1583-3AA2** ■-■■■■	980	1.9
160	**180**	**315 L**	2982	510	IE2	95.6	95.7	95.1	0.91	265	2.6	8.5	3.3	77	91	**1LE1583-3AA4** ■-■■■■	980	1.9
200	**225**	**315 L**	2986	640	I	95.8	95.9	95.5	0.92	330	3.9	10	3.6	78	93	**1LE1583-3AA5** ■-■■■■	1080	2.45

Voltages [2]		Version					Order code
50 Hz 230 VΔ/400 VY	60 Hz [1] 460 VY	**Standard**	**2**	**2**			–
50 Hz 400 VΔ/690 VY	60 Hz [1] 460 VΔ	**Standard**	**3**	**4**			–
50 Hz 500 VY		Without additional charge	**2**	**7**			–
50 Hz 500 VΔ		Without additional charge	**4**	**0**			–
For other voltages [1] and more information, see from page 3/104			**9**	**0**			**...**
Types of construction		Version					Order code
Without flange	IM B3 [3]	**Standard**			**A**		–
With flange	IM B5 [3]	With additional charge			**F**		–
For other types of construction and more information, see from page 3/111					■		**...**
Motor protection		Version					Order code
Without		**Standard**				**A**	–
PTC thermistor with 3 temperature sensors		With additional charge				**B**	–
For other motor protection and more information, see from page 3/121						■	**...**
Terminal box position		Version					
Terminal box at top		**Standard**				**4**	
For other terminal box positions and more information, see from page 3/124						■	

Special versions			Order code(s)
Forced-air cooled motors w/o ext. fan/fan cover (IC418)	**1LE1583- . . . .**	■-■■■■ -Z	**F90+...+...+...**
For options, see from page 3/132	**1LE1583- . . . .**	■-■■■■ -Z	**...+...+...+...**

[1] Operating values at rated power for 60 Hz are stored in the SPC.

[2] Parallel supply lines are required in the case of connection to ≤ 240 V.
For frame size 315 with connection to ≤ 240 V, due to the high current, a drilled, removable entry plate (order code **R52**) or a larger terminal box (order code **R50**) can be used. Order codes **R52** and **R50** alter the motor dimensions.

[3] Types derived from IM B3 (IM B6/7/8, IM V6 and IM V5), from IM B5 (IM V3 and IM V1) and from IM B14 (IM V19 and IM V18) are possible, provided that no requirement exists for stamping of the type on the rating plate. The basic type IM B3, IM B5, or IM B14 is stamped as standard on the rating plate. If mounted in a different position, the position must be specified to ensure that the condensation drainage holes are positioned correctly.

© Innomotics 2024

Selection and ordering data

P_{rated}, 50 Hz/ P50 kW	P_{rated}, 60 Hz/ P60 [1] kW	Frame size FS	Operating values at rated power n_{rated}, 50 Hz rpm	T_{rated}, 50 Hz Nm	Different IE class 60 Hz/P60	η_{rated}, 50 Hz, 4/4 %	η_{rated}, 50 Hz, 3/4 %	η_{rated}, 50 Hz, 2/4 %	$\cos\varphi_{rated}$, 50 Hz, 4/4	I_{rated}, 50 Hz, 400 V A	T_{LR}/T_{rated}, 50 Hz	I_{LR}/I_{rated}, 50 Hz	T_B/T_{rated}, 50 Hz	L_{pfA}, 50 Hz dB(A)	L_{WA}, 50 Hz dB(A)	Cast-iron series 1LE1583 Article No.		$m_{IM\,B3}$ kg	J kgm²
_ Cooling: Self-ventilated (IC411) or with order code F90 forced-air cooled without external fan and fan cover (IC418)																			
_ Efficiency according to IEC 60034-30-1: IE3 Premium Efficiency, service factor (SF) 1.0																			
_ Insulation: Thermal class 155 (temperature class F), IP55 degree of protection, utilization in accordance with thermal class 130 (temperature class B)																			
_ Optional and suitable for converter operation; $U_{line} \leq 690$ V - IVIC-C premiuminsulation system																			
4-pole: 1500 rpm at 50 Hz, 1800 rpm at 60 Hz [1]																			
2.2	**2.55**	**100 L**	1465	14.3	IE2	86.7	87	85.9	0.83	4.4	2.5	9.2	3.8	60	72	**1LE1583-1AB4**	■-■■■■	40	0.014
3	**3.45**	**100 L**	1460	19.6	IE2	87.7	88.4	87.8	0.84	5.9	2.4	8.5	3.4	68	75	**1LE1583-1AB5**	■-■■■■	52	0.016
4	**4.55**	**112 M**	1460	26		88.6	89.6	89.4	0.85	7.7	2.1	7.5	3	67	74	**1LE1583-1BB2**	■-■■■■	60	0.02
5.5	**6.3**	**132 S**	1470	35.5		89.6	90.1	89.7	0.82	10.8	2.5	8.3	3.6	64	76	**1LE1583-1CB0**	■-■■■■	67	0.034
7.5	**8.6**	**132 M**	1465	49	IE2	90.4	91.1	90.8	0.84	14.3	2.5	8.1	3.3	64	76	**1LE1583-1CB2**	■-■■■■	82	0.046
11	**12.6**	**160 M**	1475	71		91.4	91.8	91.2	0.84	20.5	2.3	7.2	3	65	77	**1LE1583-1DB2**	■-■■■■	110	0.071
15	**17.3**	**160 L**	1480	97	IE2	92.1	92.4	92	0.85	27.5	2.9	8.1	3.3	67	74	**1LE1583-1DB4**	■-■■■■	137	0.099
18.5	**21.3**	**180 M**	2960	60		92.4	92.9	92.6	0.92	31.5	2.8	9.7	3.8	78	85	**1LE1583-1EB2**	■-■■■■	131	0.073
22	**25.3**	**180 L**	1470	120	IE2	92.6	93.1	93	0.82	35	2.7	8	3.5	66	73	**1LE1583-1EB4**	■-■■■■	166	0.13
30	**34.5**	**200 L**	1470	143	IE2	93	93.4	93.1	0.82	41.5	2.6	7.7	3.3	62	75	**1LE1583-2AB5**	■-■■■■	178	0.14
37	**42.5**	**225 S**	1470	195	IE2	93.6	94.3	94.5	0.84	55	2.6	7.3	3.1	59	72	**1LE1583-2BB0**	■-■■■■	240	0.24
45	**52**	**225 M**	1482	240	IE2	93.9	94.3	94	0.84	68	3.2	8.3	3.1	69	83	**1LE1583-2BB2**	■-■■■■	380	0.52
55	**63**	**250 M**	1484	290	IE2	94.2	94.6	94.4	0.84	82	3.4	8.3	3.2	69	83	**1LE1583-2CB2**	■-■■■■	450	0.655
75	**86**	**280 S**	1486	355		94.6	94.9	94.4	0.86	98	3	8.3	3.3	68	82	**1LE1583-2DB0**	■-■■■■	525	1.07
90	**104**	**280 M**	1488	480	IE2	95	95.1	94.5	0.85	134	3.4	9.6	3.7	69	83	**1LE1583-2DB2**	■-■■■■	670	2.01
110	**127**	**315 M [4]**	1486	580		95.2	95.5	95.3	0.86	159	2.5	7.5	3	70	84	**1LE1583-3AB0**	■-■■■■	705	2.01
132	**152**	**315 M**	1491	700		95.4	95.6	95.3	0.86	194	3.3	9	3.2	73	87	**1LE1583-3AB2**	■-■■■■	950	2.66
160	**184**	**315 L**	1491	850		95.6	95.9	95.8	0.86	230	3.3	8.6	3.3	73	87	**1LE1583-3AB4**	■-■■■■	990	3.05
200	**230**	**315 L**	1490	1030		95.8	96.2	96.1	0.86	280	3.3	8.3	3	73	87	**1LE1583-3AB5**	■-■■■■	990	3.07

Voltages [2]		Version					Order code
50 Hz 230 VΔ/400 VY	60 Hz [1] 460 VY	**Standard**	**2**	**2**			–
50 Hz 400 VΔ/690 VY	60 Hz [1] 460 VΔ	**Standard**	**3**	**4**			–
50 Hz 500 VY		Without additional charge	**2**	**7**			–
50 Hz 500 VΔ		Without additional charge	**4**	**0**			–
For other voltages [1] and more information, see from page 3/104			**9**	**0**			...
Types of construction		Version					Order code
Without flange	IM B3 [3]	**Standard**			**A**		–
With flange	IM B5 [3]	With additional charge			**F**		–
For other types of construction and more information, see from page 3/111					■		...
Motor protection		Version					Order code
Without		**Standard**				**A**	–
PTC thermistor with 3 temperature sensors		With additional charge				**B**	–
For other motor protection and more information, see from page 3/121						■	...
Terminal box position		Version					
Terminal box at top		**Standard**					**4**
For other terminal box positions and more information, see from page 3/124							■

Special versions			Order code(s)
Forced-air cooled motors w/o ext. fan/fan cover (IC418)	**1LE1583-....**	■-■■■■ -Z	**F90+...+...+...**
For options, see from page 3/132	**1LE1583-....**	■-■■■■ -Z	...+...+...+...

1) Operating values at rated power for 60 Hz are stored in the SPC.

2) Parallel supply lines are required in the case of connection to ≤ 240 V.
For frame size 315 with connection to ≤ 240 V, due to the high current, a drilled, removable entry plate (order code **R52**) or a larger terminal box (order code **R50**) can be used. Order codes **R52** and **R50** alter the motor dimensions.

3) Types derived from IM B3 (IM B6/7/8, IM V6 and IM V5), from IM B5 (IM V3 and IM V1) and from IM B14 (IM V19 and IM V18) are possible, provided that no requirement exists for stamping of the type on the rating plate. The basic type IM B3, IM B5, or IM B14 is stamped as standard on the rating plate. If mounted in a different position, the position must be specified to ensure that the condensation drainage holes are positioned correctly.

4) Version as 315 M (different from 315 S according to DIN EN 50347).

© Innomotics 2024

Selection and ordering data

P_{rated}, 50 Hz/ P50 kW	P_{rated}, 60 Hz/ P60 [1] kW	Frame size FS	Operating values at rated power n_{rated}, 50 Hz rpm	T_{rated}, 50 Hz Nm	Different IE class 60 Hz/P60	η_{rated}, 50 Hz, 4/4 %	η_{rated}, 50 Hz, 3/4 %	η_{rated}, 50 Hz, 2/4 %	$\cos\varphi_{rated}$, 50 Hz, 4/4	I_{rated}, 50 Hz, 400 V A	T_{LR}/T_{rated}, 50 Hz	I_{LR}/I_{rated}, 50 Hz	T_B/T_{rated}, 50 Hz	L_{pfA}, 50 Hz dB(A)	L_{WA}, 50 Hz dB(A)	Cast-iron series 1LE1583 Article No.	$m_{IM\ B3}$ kg	J kgm²
_ Cooling: Self-ventilated (IC411) or with order code F90 forced-air cooled without external fan and fan cover (IC418)																		
_ Efficiency according to IEC 60034-30-1: IE3 Premium Efficiency, service factor (SF) 1.0																		
_ Insulation: Thermal class 155 (temperature class F), IP55 degree of protection, utilization in accordance with thermal class 130 (temperature class B)																		
_ Optional and suitable for converter operation; $U_{line} \leq 690$ V - IVIC-C premiuminsulation system																		
6-pole: 1000 rpm at 50 Hz, 1200 rpm at 60 Hz [1]																		
15	**18**	**180 L**	975	147	IE2	91.2	91.6	91.2	0.77	31	2.3	6.4	3	55	68	**1LE1583-1EC4** ■-■■■■	180	0.19
18.5	**22**	**200 L**	978	181	IE2	91.7	92.1	91.9	0.79	37	2.5	5.6	2.6	58	71	**1LE1583-2AC4** ■-■■■■	213	0.28
22	**26.5**	**200 L**	978	215	IE1	92.2	93.3	93.5	0.79	43.5	2.5	5.6	2.6	55	68	**1LE1583-2AC5** ■-■■■■	230	0.32
30	**36**	**225 M**	982	290	IE2	92.9	93.7	93.7	0.81	58	2.6	7	2.9	65	79	**1LE1583-2BC2** ■-■■■■	395	0.82
37	**44.5**	**250 M**	986	360	IE2	93.3	94	94	0.84	68	2.8	7.5	2.9	68	81	**1LE1583-2CC2** ■-■■■■	480	1.27
45	**54**	**280 S**	990	435	IE2	93.7	94.2	94.1	0.84	83	3.1	8	3	60	74	**1LE1583-2DC0** ■-■■■■	560	2.11
55	**66**	**280 M**	988	530	IE2	94.1	94.8	94.9	0.84	100	3.2	8.6	3	68	81	**1LE1583-2DC2** ■-■■■■	630	2.39
75	**90**	**315 S**	992	720	IE2	94.6	95	94.7	0.84	136	2.4	7.5	2.8	63	78	**1LE1583-3AC0** ■-■■■■	890	3.05
90	**108**	**315 M [4]**	992	870	IE2	94.9	95.3	95.1	0.84	163	2.8	7.9	3	63	78	**1LE1583-3AC2** ■-■■■■	990	3.86
110	**132**	**315 L**	993	1060	IE2	95.1	95.4	95.2	0.84	199	2.8	8.3	3.2	67	82	**1LE1583-3AC4** ■-■■■■	1110	4.3
132	**158**	**315 L**	993	1270		95.4	95.6	95.3	0.8	250	3.2	8.8	3.6	67	82	**1LE1583-3AC5** ■-■■■■	1110	4.53
160	**192**	**315 L**	992	1540		95.6	95.9	95.7	0.82	295	3.5	9	3.6	67	82	**1LE1583-3AC6** ■-■■■■	1270	5.41
8-pole: 750 rpm at 50 Hz, 900 rpm at 60 Hz [1]																		
11	**13.2**	**180 L**	725	145		88.6	89.5	89.2	0.74	24	2.1	5.4	2.6	62	75	**1LE1583-1ED4** ■-■■■■	190	0.267
15	**18**	**200 L**	730	196		89.6	89.8	89.1	0.73	33	3	6.8	3.7	57	70	**1LE1583-2AD5** ■-■■■■	255	0.42
18.5	**22**	**225 S**	732	240	IE2	90.1	91.3	91.3	0.74	40	2.4	5.9	2.9	56	70	**1LE1583-2BD0** ■-■■■■	270	0.502
22	**26.5**	**225 M**	732	285	IE2	90.6	91.8	92	0.77	45.5	2.4	6	2.8	56	70	**1LE1583-2BD2** ■-■■■■	280	0.549
30	**36**	**250 M**	734	390	IE2	91.3	92	91.8	0.78	61	2.5	6.4	2.9	60	74	**1LE1583-2CD2** ■-■■■■	370	0.851
37	**44.5**	**280 S**	736	480		91.8	93	93.3	0.78	75	2.2	5.6	2.3	63	77	**1LE1583-2DD0** ■-■■■■	460	1.57
45	**54**	**280 M**	738	580		92.2	93.2	93.5	0.81	87	2.4	6.2	2.4	65	79	**1LE1583-2DD2** ■-■■■■	550	2.09
55	**66**	**315 S**	740	710		92.5	93.5	93.7	0.8	107	2.2	6.2	2.6	66	81	**1LE1583-3AD0** ■-■■■■	650	2.08
75	**90**	**315 M**	738	970	IE2	93.1	94.1	94.4	0.8	145	2.2	6	2.6	69	84	**1LE1583-3AD2** ■-■■■■	720	2.48
90	**108**	**315 L**	738	1160	IE2	93.4	94.4	94.9	0.83	168	2.1	6	2.5	71	85	**1LE1583-3AD4** ■-■■■■	860	3.13
110	**132**	**315 L**	740	1420		93.7	94.5	94.9	0.8	210	2.5	6.7	2.9	74	88	**1LE1583-3AD5** ■-■■■■	960	3.94
132	**158**	**315 L**	741	1700		94	94.6	94.8	0.79	255	3	8	3.3	76	90	**1LE1583-3AD6** ■-■■■■	1250	5.51

Voltages [2]		Version					Order code
50 Hz 230 VΔ/400 VY	60 Hz [1] 460 VY	**Standard**	**2**	**2**			–
50 Hz 400 VΔ/690 VY	60 Hz [1] 460 VΔ	**Standard**	**3**	**4**			–
50 Hz 500 VY		Without additional charge	**2**	**7**			–
50 Hz 500 VΔ		Without additional charge	**4**	**0**			–
For other voltages [1] and more information, see from page 3/104			**9**	**0**			**...**
Types of construction		Version					Order code
Without flange	IM B3 [3]	**Standard**		**A**			–
With flange	IM B5 [3]	With additional charge		**F**			–
For other types of construction and more information, see from page 3/111				■			**...**
Motor protection		Version					Order code
Without		**Standard**			**A**		–
PTC thermistor with 3 temperature sensors		With additional charge			**B**		–
For other motor protection and more information, see from page 3/121					■		**...**
Terminal box position		Version					
Terminal box at top		**Standard**				**4**	
For other terminal box positions and more information, see from page 3/124						■	

Special versions			Order code(s)
Forced-air cooled motors w/o ext. fan/fan cover (IC418)	**1LE1583-....** ■-■■■■	**-Z**	**F90+...+...+...**
For options, see from page 3/132	**1LE1583-....** ■-■■■■	**-Z**	**...+...+...+...**

[1] Operating values at rated power for 60 Hz are stored in the SPC.

[2] Parallel supply lines are required in the case of connection to ≤ 240 V. For frame size 315 with connection to ≤ 240 V, due to the high current, a drilled, removable entry plate (order code **R52**) or a larger terminal box (order code **R50**) can be used. Order codes **R52** and **R50** alter the motor dimensions.

[3] Types derived from IM B3 (IM B6/7/8, IM V6 and IM V5), from IM B5 (IM V3 and IM V1) and from IM B14 (IM V19 and IM V18) are possible, provided that no requirement exists for stamping of the type on the rating plate. The basic type IM B3, IM B5, or IM B14 is stamped as standard on the rating plate. If mounted in a different position, the position must be specified to ensure that the condensation drainage holes are positioned correctly.

[4] Version as 315 M (different from 315 S according to DIN EN 50347).

© Innomotics 2024

Innomotics GP and Innomotics SD standard motors

IE2

Please note minimum legal efficiencies in the European Economic Area

Aluminum series Innomotics GP 1LE1001 – self-ventilated or forced-air cooled

Selection and ordering data

P_{rated}, 50 Hz/ P50	P_{rated}, 60 Hz/ P60 [1]	Frame size	Operating values at rated power n_{rated}, 50 Hz	T_{rated}, 50 Hz	Different IE class 60 Hz/P60	η_{rated}, 50 Hz, 4/4	η_{rated}, 50 Hz, 3/4	η_{rated}, 50 Hz, 2/4	$\cos\varphi_{rated}$, 50 Hz, 4/4	I_{rated}, 50 Hz, 400 V	T_{LR}/T_{rated}, 50 Hz	I_{LR}/I_{rated}, 50 Hz	T_B/T_{rated}, 50 Hz	L_{pfA}, 50 Hz	L_{WA}, 50 Hz	Aluminum series 1LE1001 Article No.	$m_{IM\ B3}$	J
kW	kW	FS	rpm	Nm		%	%	%		A				dB(A)	dB(A)		kg	kgm²
_ Cooling: Self-ventilated (IC411) or with order code F90 forced-air cooled without external fan and fan cover (IC418)																		
_ Efficiency according to IEC 60034-30-1: IE2 High Efficiency, service factor (SF) 1.15																		
_ Insulation: Thermal class 155 (temperature class F), IP55 degree of protection, utilization in accordance with thermal class 130 (temperature class B)																		
2-pole: 3000 rpm at 50 Hz, 3600 rpm at 60 Hz [1]																		
0.18	**0.21**	**63 M**	2850	0.6		60.4	59.4	53.7	0.78	0.55	2.2	4.5	2.7	57	64	**1LE1001-0BA2** ■-■■■■	4	0.00022
0.25	**0.29**	**63 M**	2835	0.84		64.8	63.5	57.3	0.81	0.69	1.9	4.1	2.5	57	64	**1LE1001-0BA3** ■-■■■■	5	0.00026
0.37	**0.43**	**71 M**	2770	1.28		69.5	70.5	67.9	0.81	0.95	2.5	4.1	2.5	58	69	**1LE1001-0CA2** ■-■■■■	6	0.00035
0.55	**0.63**	**71 M**	2780	1.89		74.1	75.2	72.9	0.8	1.34	2.6	4.6	2.6	58	69	**1LE1001-0CA3** ■-■■■■	7	0.00045
0.75	**0.86**	**80 M**	2805	2.55		77.4	80	80.1	0.84	1.67	1.9	4.9	2.3	60	71	**1LE1001-0DA2** ■-■■■■	9	0.0008
1.1	**1.27**	**80 M**	2835	3.7		79.6	81.3	80.9	0.83	2.4	2.7	6	3.1	60	71	**1LE1001-0DA3** ■-■■■■	11	0.0011
1.5	**1.75**	**90 S**	2900	4.95		81.3	81.7	79.7	0.84	3.15	2.7	6.9	3.6	65	77	**1LE1001-0EA0** ■-■■■■	14	0.0017
2.2	**2.55**	**90 L**	2890	7.3		83.2	83.7	82	0.85	4.5	2.5	7.1	3.7	65	77	**1LE1001-0EA4** ■-■■■■	16	0.0021
3	**3.45**	**100 L**	2905	9.9		84.6	85.5	84.6	0.84	6.1	2.3	7	3.3	67	79	**1LE1001-1AA4** ■-■■■■	21	0.0044
4	**4.55**	**112 M**	2930	13		85.8	86.1	84.7	0.83	8.1	2.8	8.1	3.4	71	79	**1LE1001-1BA2** ■-■■■■	26	0.0062
5.5	**6.3**	**132 S**	2935	17.9		87	87.8	86.8	0.91	10	2.1	7.3	2.9	72	80	**1LE1001-1CA0** ■-■■■■	39	0.019
7.5	**8.6**	**132 S**	2950	24.5		88.1	88.5	87.6	0.87	14.1	2.2	7.5	3.1	68	80	**1LE1001-1CA1** ■-■■■■	43	0.024
11	**12.6**	**160 M**	2955	35.5		89.4	89.3	88	0.87	20.5	2.1	7.4	3.2	70	82	**1LE1001-1DA2** ■-■■■■	67	0.045
15	**17.3**	**160 M**	2940	48.5		90.3	90.5	89.4	0.86	28	2.5	7.9	3.5	76	84	**1LE1001-1DA3** ■-■■■■	70	0.0426
18.5	**21.3**	**160 L**	2955	60		90.9	91.2	90.6	0.88	33.5	2.9	7.9	3.6	70	82	**1LE1001-1DA4** ■-■■■■	84	0.061
22	**24.5**	**180 M**	2940	71		91.3	91.8	91.3	0.87	40	2.7	7.4	3.6	77	84	**1LE1001-1EA2** ■-■■■■	123	0.069
30	**33.5**	**200 L**	2960	97		92	92.3	91.8	0.87	54	2.5	6.9	3.3	78	85	**1LE1001-2AA4** ■-■■■■	158	0.13
37	**41.5**	**200 L**	2960	119		92.5	93	92.7	0.88	66	2.7	7.4	3.5	78	85	**1LE1001-2AA5** ■-■■■■	178	0.15

Voltages		Version					Order code
50 Hz 230 VΔ/400 VY	60 Hz [1] 460 VY	**Standard**	**2**	**2**			–
50 Hz 400 VΔ/690 VY	60 Hz [1] 460 VΔ	**Standard**	**3**	**4**			–
50 Hz 500 VY		Without additional charge	**2**	**7**			–
50 Hz 500 VΔ		Without additional charge	**4**	**0**			–
For other voltages [1] and more information, see from page 3/101			**9**	**0**			**...**
Types of construction		Version					Order code
Without flange	IM B3 [3]	**Standard**		**A**			–
With flange	IM B5 [3]	With additional charge		**F**			–
With flange	IM B14 [3]	With additional charge		**K**			–
For other types of construction and more information, see from page 3/107				■			**...**
Motor protection		Version					Order code
Without		**Standard**			**A**		–
PTC thermistor with 1 or 3 temperature sensors (frame sizes 63 to 90 or 100 to 200)		With additional charge			**B**		–
For other motor protection and more information, see from page 3/120					■		**...**
Terminal box position		Version					
Terminal box at top		**Standard**				**4**	
For other terminal box positions and more information, see from page 3/123						■	

Special versions		Order code(s)
Forced-air cooled motors w/o ext. fan/fan cover (IC418)	**1LE1001-....** ■-■■■■ **-Z**	**F90 +...+...+...**
For options, see from page 3/126	**1LE1001-....** ■-■■■■ **-Z**	**...+...+...+...**

[1] Operating values at rated power for 60 Hz are stored in the SPC.

[2] For converter operation of shaft heights 63 and 90, ordering with PTC thermistors and their connection to the converter is recommended.

[3] Types derived from IM B3 (IM B6/7/8, IM V6, and IM V5), from IM B5 (IM V3 and IM V1) and from IM B14 (IM V19 and IM V18) are possible, provided that no requirements exist for condensation drainage holes (**H03**) or stamping of the type on the rating plate. The basic type IM B3, IM B5, or IM B14 is stamped as standard on the rating plate. For orders with condensation drainage holes (**H03**), the type must be specified.

© Innomotics 2024

Selection and ordering data

P_{rated}, 50 Hz/ P50 kW	P_{rated}, 60 Hz/ P60 [1] kW	Frame size FS	Operating values at rated power n_{rated}, 50 Hz rpm	T_{rated}, 50 Hz Nm	Different IE class 60 Hz/P60	η_{rated}, 50 Hz, 4/4 %	η_{rated}, 50 Hz, 3/4 %	η_{rated}, 50 Hz, 2/4 %	$\cos\varphi_{rated}$, 50 Hz, 4/4	I_{rated}, 50 Hz, 400 V A	T_{LR}/T_{rated}, 50 Hz	I_{LR}/I_{rated}, 50 Hz	T_B/T_{rated}, 50 Hz	L_{pfA}, 50 Hz dB(A)	L_{WA}, 50 Hz dB(A)	Aluminum series 1LE1001 Article No.	$m_{IM\ B3}$ kg	J kgm²
_ Cooling: Self-ventilated (IC411) or with order code F90 forced-air cooled without external fan and fan cover (IC418)																		
_ Efficiency according to IEC 60034-30-1: IE2 High Efficiency, service factor (SF) 1.15																		
_ Insulation: Thermal class 155 (temperature class F), IP55 degree of protection, utilization in accordance with thermal class 130 (temperature class B)																		
4-pole: 1500 rpm at 50 Hz, 1800 rpm at 60 Hz [1]																		
0.12	**0.14**	**63 M**	1390	0.82		59.1	56.4	49	0.66	0.44	2.4	3.1	2.5	50	58	**1LE1001-0BB2** ■-■■■■	5	0.00037
0.18	**0.21**	**63 M**	1385	1.24		64.7	62.4	55.7	0.65	0.62	2.6	3.3	2.6	57	64	**1LE1001-0BB3** ■-■■■■	5	0.00045
0.25	**0.29**	**71 M**	1395	1.71		68.5	68.4	64.2	0.69	0.76	2.4	3.7	2.5	50	61	**1LE1001-0CB2** ■-■■■■	6	0.00076
0.37	**0.43**	**71 M**	1380	2.55		72.7	73.2	69.9	0.72	1.02	2.5	4	2.5	59	67	**1LE1001-0CB3** ■-■■■■	7	0.00095
0.55	**0.63**	**80 M**	1440	3.65		77.1	76.8	73.7	0.74	1.39	2.2	5.3	3.1	53	64	**1LE1001-0DB2** ■-■■■■	10	0.0017
0.75	**0.86**	**80 M**	1440	4.95		79.6	79.5	77	0.76	1.79	2.2	5.6	3.1	58	66	**1LE1001-0DB3** ■-■■■■	11	0.0021
1.1	**1.27**	**90 S**	1425	7.4		81.4	82.3	81.1	0.78	2.5	2.3	5.6	2.9	54	62	**1LE1001-0EB0** ■-■■■■	13	0.0028
1.5	**1.75**	**90 L**	1435	10		82.8	83.5	82.2	0.79	3.3	2.6	6.4	3.4	56	68	**1LE1001-0EB4** ■-■■■■	16	0.0036
2.2	**2.55**	**100 L**	1455	14.4		84.3	85.1	84.2	0.81	4.65	2.1	6.9	3.3	60	72	**1LE1001-1AB4** ■-■■■■	21	0.0086
3	**3.45**	**100 L**	1455	19.7		85.5	86.4	85.6	0.82	6.2	2	6.9	3.1	60	72	**1LE1001-1AB5** ■-■■■■	25	0.011
4	**4.55**	**112 M**	1460	26		86.6	87.3	86.4	0.81	8.2	2.5	7.1	3.2	58	70	**1LE1001-1BB2** ■-■■■■	29	0.014
5.5	**6.3**	**132 S**	1465	36		87.7	88.4	87.6	0.8	11.3	2.3	6.9	2.9	64	76	**1LE1001-1CB0** ■-■■■■	42	0.022
7.5	**8.6**	**132 M**	1465	49		88.7	89.8	89.8	0.83	14.7	2.3	6.9	2.9	64	76	**1LE1001-1CB2** ■-■■■■	49	0.028
11	**12.6**	**160 M**	1470	71		89.8	90.8	90.9	0.84	21	1.9	7	3	67	75	**1LE1001-1DB2** ■-■■■■	76	0.058
15	**17.3**	**160 L**	1475	97		90.6	91.2	90.8	0.85	28	2.3	7.3	3	65	77	**1LE1001-1DB4** ■-■■■■	83	0.071
18.5	**21.3**	**180 M**	1465	121		91.2	92	91.9	0.84	35	2.5	7.2	3.4	61	74	**1LE1001-1EB2** ■-■■■■	128	0.12
22	**25.3**	**180 L**	1465	143		91.6	92.2	91.9	0.84	41.5	2.6	7.3	3.5	69	76	**1LE1001-1EB4** ■-■■■■	132	0.13
30	**34.5**	**200 L**	1470	195		92.3	92.9	92.6	0.84	56	2.5	6.7	3.3	70	77	**1LE1001-2AB5** ■-■■■■	173	0.2

Voltages		Version					Order code
50 Hz 230 VΔ/400 VY	60 Hz [1] 460 VY	**Standard**	**2**	**2**			–
50 Hz 400 VΔ/690 VY	60 Hz [1] 460 VΔ	**Standard**	**3**	**4**			–
50 Hz 500 VY		Without additional charge	**2**	**7**			–
50 Hz 500 VΔ		Without additional charge	**4**	**0**			–
For other voltages [1] and more information, see from page 3/101			**9**	**0**			**...**
Types of construction		Version					Order code
Without flange	IM B3 [3]	**Standard**			**A**		–
With flange	IM B5 [3]	With additional charge			**F**		–
With flange	IM B14 [3]	With additional charge			**K**		–
For other types of construction and more information, see from page 3/107					■		**...**
Motor protection		Version					Order code
Without		**Standard**				**A**	–
PTC thermistor with 1 or 3 temperature sensors (frame sizes 63 to 90 or 100 to 200)		With additional charge				**B**	–
For other motor protection and more information, see from page 3/120						■	**...**
Terminal box position		Version					
Terminal box at top		**Standard**					**4**
For other terminal box positions and more information, see from page 3/123							■

Special versions		Order code(s)
Forced-air cooled motors w/o ext. fan/fan cover (IC418)	**1LE1001-....** ■-■■■■ **-Z**	**F90 +...+...+...**
For options, see from page 3/126	**1LE1001-....** ■-■■■■ **-Z**	**...+...+...+...**

[1] Operating values at rated power for 60 Hz are stored in the SPC.
[2] For converter operation of shaft heights 63 and 90, ordering with PTC thermistors and their connection to the converter is recommended.
[3] Types derived from IM B3 (IM B6/7/8, IM V6, and IM V5), from IM B5 (IM V3 and IM V1) and from IM B14 (IM V19 and IM V18) are possible, provided that no requirements exist for condensation drainage holes (**H03**) or stamping of the type on the rating plate. The basic type IM B3, IM B5, or IM B14 is stamped as standard on the rating plate. For orders with condensation drainage holes (**H03**), the type must be specified.

© Innomotics 2024

Selection and ordering data

P_{rated}, 50 Hz/ P50	P_{rated}, 60 Hz/ P60 [1]	Frame size	Operating values at rated power n_{rated}, 50 Hz	T_{rated}, 50 Hz	Different IE class 60 Hz/P60	η_{rated}, 50 Hz, 4/4	η_{rated}, 50 Hz, 3/4	η_{rated}, 50 Hz, 2/4	$\cos\varphi_{rated}$, 50 Hz, 4/4	I_{rated}, 50 Hz, 400 V	T_{LR}/T_{rated}, 50 Hz	I_{LR}/I_{rated}, 50 Hz	T_B/T_{rated}, 50 Hz	L_{pfA}, 50 Hz	L_{WA}, 50 Hz	Aluminum series 1LE1001 Article No.	$m_{IM\ B3}$	J
kW	kW	FS	rpm	Nm		%	%	%		A				dB(A)	dB(A)		kg	kgm²
_ Cooling: Self-ventilated (IC411) or with order code F90 forced-air cooled without external fan and fan cover (IC418)																		
_ Efficiency according to IEC 60034-30-1: IE2 High Efficiency, service factor (SF) 1.15																		
_ Insulation: Thermal class 155 (temperature class F), IP55 degree of protection, utilization in accordance with thermal class 130 (temperature class B)																		
6-pole: 1000 rpm at 50 Hz, 1200 rpm at 60 Hz [1]																		
0.09	**0,11**	**63 M**	895	0.96		42.7	38.5	30.4	0.63	0.48	1.8	2	1.9	56	62	**1LE1001-0BC2** ■-■■■■	4	0.00034
0.18	**0,21**	**71 M**	875	1.96		56.6	56.9	52.7	0.68	0.68	2.2	2.5	2.3	46	57	**1LE1001-0CC2** ■-■■■■	6	0.00077
0.25	**0,29**	**71M**	870	2.75		61.6	62.7	59.2	0.7	0.84	2.3	2.6	2.3	46	57	**1LE1001-0CC3** ■-■■■■	7	0.00098
0.37	**0.43**	**80 M**	925	3.8		67.6	67.9	64.4	0.69	1.14	2.1	4	2.4	42	53	**1LE1001-0DC2** ■-■■■■	9	0.0017
0.55	**0.63**	**80 M**	935	5.6		73.1	73.8	70.8	0.66	1.65	2.5	4.4	2.9	42	53	**1LE1001-0DC3** ■-■■■■	13	0.0025
0.75	**0.86**	**90 S**	935	7.7		75.9	76.8	74.5	0.7	2.05	2	4.1	2.5	43	55	**1LE1001-0EC0** ■-■■■■	13	0.003
1.1	**1.27**	**90 L**	935	11.2	IE1	78.1	79.3	77.7	0.7	2.9	2.2	4.4	2.6	43	55	**1LE1001-0EC4** ■-■■■■	16	0.004
1.5	**1.75**	**100 L**	970	14.8		79.8	80.5	79	0.73	3.7	2	5.4	2.8	59	71	**1LE1001-1AC4** ■-■■■■	25	0.011
2.2	**2.55**	**112 M**	965	22		81.8	82.7	81.7	0.75	5.2	2	5	2.8	62	74	**1LE1001-1BC2** ■-■■■■	29	0.014
3	**3.45**	**132 S**	975	29.5		83.3	83.5	82	0.72	7.2	2.1	5.9	3.1	58	66	**1LE1001-1CC0** ■-■■■■	42	0.029
4	**4.55**	**132 M**	965	39.5		84.6	85.6	85.1	0.75	9.1	1.8	5.4	2.6	54	62	**1LE1001-1CC2** ■-■■■■	42	0.029
5.5	**6.3**	**132 M**	965	54		86	86.8	85.5	0.73	12.6	2.1	5.5	2.8	68	76	**1LE1001-1CC3** ■-■■■■	46	0.0385
7.5	**8.6**	**160 M**	985	73		87.2	87.9	87.2	0.8	15.5	2.2	6.1	2.6	64	72	**1LE1001-1DC2** ■-■■■■	85	0.098
11	**12.6**	**160 L**	978	107		88.7	89.3	88.6	0.79	22.5	2.4	6.1	2.6	57	65	**1LE1001-1DC4** ■-■■■■	87	0.1324
15	**18**	**180 L**	975	147		89.7	90.1	89.5	0.78	31	2.5	6	3.1	57	70	**1LE1001-1EC4** ■-■■■■	121	0.17
18.5	**22**	**200 L**	978	181	IE1	90.4	91.4	91.3	0.82	36	2.4	5.8	2.6	63	76	**1LE1001-2AC4** ■-■■■■	151	0.25
22	**26.5**	**200 L**	978	215	IE1	90.9	91.7	91.4	0.82	42.5	2.5	6.2	2.6	63	76	**1LE1001-2AC5** ■-■■■■	173	0.3

Voltages		Version				Order code
50 Hz 230 VΔ/400 VY	60 Hz [1] 460 VY	**Standard**	**2**	**2**		–
50 Hz 400 VΔ/690 VY	60 Hz [1] 460 VΔ	**Standard**	**3**	**4**		–
50 Hz 500 VY		Without additional charge	**2**	**7**		–
50 Hz 500 VΔ		Without additional charge	**4**	**0**		–
For other voltages [1] and more information, see from page 3/101			**9**	**0**		...
Types of construction		Version				Order code
Without flange	IM B3 [3]	**Standard**		**A**		–
With flange	IM B5 [3]	With additional charge		**F**		–
With flange	IM B14 [3]	With additional charge		**K**		–
For other types of construction and more information, see from page 3/107				■		...
Motor protection		Version				Order code
Without		**Standard**			**A**	–
PTC thermistor with 1 or 3 temperature sensors (frame sizes 80, 90 or 100 to 200)		With additional charge			**B**	–
For other motor protection and more information, see from page 3/120					■	...
Terminal box position		Version				
Terminal box at top		**Standard**			**4**	
For other terminal box positions and more information, see from page 3/123					■	

Special versions		Order code(s)
Forced-air cooled motors w/o ext. fan/fan cover (IC418)	**1LE1001-....** ■-■■■■ **-Z**	**F90 +...+...+...**
For options, see from page 3/126	**1LE1001-....** ■-■■■■ **-Z**	**...+...+...+...**

[1] Operating values at rated power for 60 Hz are stored in the SPC.

[2] For converter operation of shaft heights 63 and 90, ordering with PTC thermistors and their connection to the converter is recommended.

[3] Types derived from IM B3 (IM B6/7/8, IM V6, and IM V5), from IM B5 (IM V3 and IM V1) and from IM B14 (IM V19 and IM V18) are possible, provided that no requirements exist for condensation drainage holes (**H03**) or stamping of the type on the rating plate. The basic type IM B3, IM B5, or IM B14 is stamped as standard on the rating plate. For orders with condensation drainage holes (**H03**), the type must be specified.

© Innomotics 2024

Selection and ordering data

P_{rated}, 50 Hz/ P50 kW	P_{rated}, 60 Hz/ P60 [1] kW	Frame size FS	Operating values at rated power n_{rated}, 50 Hz rpm	T_{rated}, 50 Hz Nm	Different IE class 60 Hz/P60	η_{rated}, 50 Hz, 4/4 %	η_{rated}, 50 Hz, 3/4 %	η_{rated}, 50 Hz, 2/4 %	$\cos\varphi_{rated}$, 50 Hz, 4/4	I_{rated}, 50 Hz, 400 V A	T_{LR}/T_{rated}, 50 Hz	I_{LR}/I_{rated}, 50 Hz	T_B/T_{rated}, 50 Hz	L_{pfA}, 50 Hz dB(A)	L_{WA}, 50 Hz dB(A)	Aluminum series 1LE1001 Article No.	$m_{IM\ B3}$ kg	J kgm²
_ Cooling: Self-ventilated (IC411) or with order code F90 forced-air cooled without external fan and fan cover (IC418)																		
_ Efficiency according to IEC 60034-30-1: IE2 High Efficiency, service factor (SF) 1.15																		
_ Insulation: Thermal class 155 (temperature class F), IP55 degree of protection, utilization in accordance with thermal class 130 (temperature class B)																		
8-pole: 750 rpm at 50 Hz, 900 rpm at 60 Hz [1]																		
0.04	**0,046**	**63 M**	645	0.59		30	25.5	18.8	0.62	0.31	1.6	1.6	1.8	45	53	**1LE1001-0BD3** ■-■■■■	4	0.00034
0.09	**0,11**	**63 M**	630	1.36		40.1	40.6	35.8	0.67	0.5	1.7	1.6	1.7	59	63	**1LE1001-0CD2** ■-■■■■	6	0.00077
0.12	**0,14**	**71 M**	640	1.79		39.8	39.3	34.5	0.66	0.66	1.8	1.8	1.8	48	59	**1LE1001-0CD3** ■-■■■■	7	0.00098
0.18	**0.21**	**80 M**	690	2.5		45.9	43.6	37.8	0.6	0.93	1.7	2.2	2.1	51	62	**1LE1001-0DD2** ■-■■■■	9	0.0017
0.25	**0.29**	**80 M**	705	3.4		50.6	48.1	41.9	0.55	1.3	2	2.5	2.5	51	62	**1LE1001-0DD3** ■-■■■■	13	0.0024
0.37	**0.43**	**90 S**	675	5.2		56.1	55.6	49.6	0.71	1.34	1.4	2.6	1.7	53	65	**1LE1001-0ED0** ■-■■■■	11	0.0019
0.55	**0.63**	**90 L**	665	7.9		61.7	63.4	59.8	0.74	1.74	1.5	2.7	1.7	53	65	**1LE1001-0ED4** ■-■■■■	13	0.0026
0.75	**0.86**	**100 L**	705	10.2		66.2	65.7	61.5	0.61	2.7	1.5	3.2	2.1	60	72	**1LE1001-1AD4** ■-■■■■	21	0.0086
1.1	**1.27**	**100 L**	695	15.1		70.8	72.3	69.6	0.65	3.45	1.4	3.2	1.9	60	72	**1LE1001-1AD5** ■-■■■■	25	0.011
1.5	**1.75**	**112 M**	725	19.8		74.1	73.9	71.2	0.63	4.65	1.6	4	2.4	63	75	**1LE1001-1BD2** ■-■■■■	29	0.017
2.2	**2.55**	**132 S**	725	29		77.6	78.2	76.6	0.62	6.6	1.4	3.5	2	63	75	**1LE1001-1CD0** ■-■■■■	41	0.034
3	**3.45**	**132 M**	720	40	IE1	80	80.7	79.2	0.62	8.7	1.4	3.7	2	63	75	**1LE1001-1CD2** ■-■■■■	49	0.037
4	**4.55**	**160 M**	730	52		81.9	82.6	81.4	0.67	10.5	1.6	3.7	1.9	63	75	**1LE1001-1DD2** ■-■■■■	69	0.065
5.5	**6.3**	**160 M**	730	72		83.8	84.2	83	0.67	14.1	1.7	3.9	2	63	75	**1LE1001-1DD3** ■-■■■■	82	0.083
7.5	**8.6**	**160 L**	725	99		85.3	86.4	86	0.7	18.1	1.6	3.8	1.9	63	75	**1LE1001-1DD4** ■-■■■■	94	0.098
11	**13.2**	**180 L**	720	146	IE1	86.9	88	87.6	0.7	26	2.3	4.9	2.6	72	80	**1LE1001-1ED4** ■-■■■■	122	0.195
15	**18**	**200 L**	718	199		88	89.5	89.9	0.76	32.5	2.4	5.4	2.8	58	65	**1LE1001-2AD5** ■-■■■■	172	0.344

Voltages		Version					Order code
50 Hz 230 VΔ/400 VY	60 Hz [1] 460 VY	**Standard**	**2**	**2**			–
50 Hz 400 VΔ/690 VY	60 Hz [1] 460 VΔ	**Standard**	**3**	**4**			–
50 Hz 500 VY		Without additional charge	**2**	**7**			–
50 Hz 500 VΔ		Without additional charge	**4**	**0**			–
For other voltages [1] and more information, see from page 3/101			**9**	**0**			**...**
Types of construction		Version					Order code
Without flange	IM B3 [2]	**Standard**		**A**			–
With flange	IM B5 [2]	With additional charge		**F**			–
With flange	IM B14 [2]	With additional charge		**K**			–
For other types of construction and more information, see from page 3/107				■			**...**
Motor protection		Version					Order code
Without		**Standard**			**A**		–
PTC thermistor with 3 temperature sensors		With additional charge			**B**		–
For other motor protection and more information, see from page 3/120					■		**...**
Terminal box position		Version					
Terminal box at top		**Standard**				**4**	
For other terminal box positions and more information, see from page 3/123						■	
Special versions							Order code(s)
Forced-air cooled motors w/o ext. fan/fan cover (IC418)			**1LE1001-....** ■-■■■■			**-Z**	**F90 +...+...+...**
For options, see from page 3/126			**1LE1001-....** ■-■■■■			**-Z**	**...+...+...+...**

[1] Operating values at rated power for 60 Hz are stored in the SPC.

[2] Types derived from IM B3 (IM B6/7/8, IM V6, and IM V5), from IM B5 (IM V3 and IM V1) and from IM B14 (IM V19 and IM V18) are possible, provided that no requirements exist for condensation drainage holes (**H03**) or stamping of the type on the rating plate. The basic type IM B3, IM B5, or IM B14 is stamped as standard on the rating plate. For orders with condensation drainage holes (**H03**), the type must be specified.

© Innomotics 2024

Innomotics GP and Innomotics SD standard motors

IE2

Please note minimum legal efficiencies in the European Economic Area

Aluminum series Innomotics GP 1LE1001 with increased power – self-ventilated

Selection and ordering data

P_{rated}, 50 Hz/ P50	P_{rated}, 60 Hz/ P60 [1]	Frame size	Operating values at rated power n_{rated}, 50 Hz	T_{rated}, 50 Hz	Different IE class 60 Hz/P60	η_{rated}, 50 Hz, 4/4	η_{rated}, 50 Hz, 3/4	η_{rated}, 50 Hz, 2/4	$\cos\varphi_{rated}$, 50 Hz, 4/4	I_{rated}, 50 Hz, 400 V	T_{LR}/T_{rated}, 50 Hz	I_{LR}/I_{rated}, 50 Hz	T_B/T_{rated}, 50 Hz	L_{pfA}, 50 Hz	L_{WA}, 50 Hz	Aluminum series 1LE1001 Article No.	$m_{IM\ B3}$	J
kW	kW	FS	rpm	Nm		%	%	%		A				dB(A)	dB(A)	▲ New	kg	kgm²
_ Cooling: Self-ventilated (IC411) or with order code F90 forced-air cooled without external fan and fan cover (IC418)																		
_ Efficiency according to IEC 60034-30-1: IE2 High Efficiency, service factor (SF) 1.15																		
_ Insulation: Thermal class 155 (temperature class F), IP55 degree of protection, utilization in accordance with thermal class 130 (temperature class B)																		
2-pole: 3000 rpm at 50 Hz, 3600 rpm at 60 Hz [1]																		
0,37	**0.43**	**63 M**	2800	1.26		69.5	69.9	66.4	0.81	0.95	2.4	4.4	2.5	55	63	**1LE1001-0BA6** ■-■■■■	6	0.00021
1.5	**1.75**	**80 M**	2830	5.1		81.3	83.4	83.6	0.85	3.15	2.6	6.1	2.8	60	71	**1LE1001-0DA6** ■-■■■■	16	0.0013
3	**3.45**	**90 L**	2895	9.9		84.6	85.5	84.5	0.86	6	3.4	7.9	3.6	65	77	**1LE1001-0EA6** ■-■■■■	20	0.0031
4	**4.55**	**100 L**	2905	13.1		85.8	86.9	86.5	0.86	7.8	2.5	7.6	3.5	67	79	**1LE1001-1AA6** ■-■■■■	26	0.0054
5.5	**6.3**	**112 M**	2945	17.8		87	87.8	87.4	0.88	10.4	2.3	8.5	3.8	69	81	**1LE1001-1BA6** ■-■■■■	34	0.012
11	**12.6**	**132 M**	2915	36		89.4	91	92.2	0.93	19.1	2.2	7.9	3.1	73	81	**1LE1001-1CA6** ■-■■■■	56	0.023
22	**25.3**	**160 L**	2955	71		91.3	91.8	91.4	0.89	39	3.1	8.4	3.7	70	82	**1LE1001-1DA6** ■-■■■■	94	0.068
30	**33.5**	**180 L**	2940	97		92	92.6	92.3	0.89	53	2.3	7.8	3.4	76	83	**1LE1001-1EA6** ■-■■■■	139	0.094
45	**51**	**200 L**	2950	146		92.9	93.2	92.9	0.87	81	2.5	7.1	3.2	77	84	**1LE1001-2AA6** ■-■■■■	194	0.176
4-pole: 1500 rpm at 50 Hz, 1800 rpm at 60 Hz [1]																		
0.25	**0.29**	**63 M**	1385	1.72		68.5	67	61.3	0.64	0.82	2.9	3.7	2.9	60	68	▲ **1LE1001-0BB6** ■-■■■■	6	0.00046
0.55	**0.63**	**71 M**	1405	3.75		77.1	76.3	72.3	0.65	1.58	3.6	5.1	3.5	60	67	▲ **1LE1001-0CB6** ■-■■■■	10	0.0014
1.1	**1.27**	**80 M**	1440	7.3		81.4	82	80.1	0.78	2.5	2.4	6.1	3	62	70	**1LE1001-0DB6** ■-■■■■	16	0.0029
2.2	**2.55**	**90 L**	1425	14.7	IE1	84.3	85.6	85	0.81	4.65	2.8	6.1	3.1	56	68	**1LE1001-0EB6** ■-■■■■	21	0.0049
4	**4.55**	**100 L**	1460	26		86.6	88	87.5	0.8	8.3	2.2	7.5	3.5	60	72	**1LE1001-1AB6** ■-■■■■	30	0.014
5.5	**6.3**	**112 M**	1460	36		87.7	88.2	87.2	0.81	11.2	2.5	7.1	3.2	58	70	**1LE1001-1BB6** ■-■■■■	34	0.017
11	**12.6**	**132 M**	1465	72		89.8	90.9	90.9	0.84	21	2.6	7.7	3.1	64	76	**1LE1001-1CB6** ■-■■■■	64	0.046
18.5	**21.3**	**160 L**	1475	120		91.2	91.8	91.3	0.85	34.5	2.5	7.7	3.3	65	77	**1LE1001-1DB6** ■-■■■■	100	0.085
30	**34.5**	**180 L**	1465	196		92.3	92.8	92.6	0.81	58	2.5	7.3	3.3	70	77	**1LE1001-1EB6** ■-■■■■	148	0.159
37	**42.5**	**200 L**	1470	240		92.7	93.3	93.1	0.84	69	2.4	7	3	68	75	**1LE1001-2AB6** ■-■■■■	189	0.246

Voltages		Version					Order code
50 Hz 230 VΔ/400 VY	60 Hz [1] 460 VY	**Standard**	**2**	**2**			–
50 Hz 400 VΔ/690 VY	60 Hz [1] 460 VΔ	**Standard**	**3**	**4**			–
50 Hz 500 VY		Without additional charge	**2**	**7**			–
50 Hz 500 VΔ		Without additional charge	**4**	**0**			–
For other voltages [1] and more information, see from page 3/101			**9**	**0**			**...**
Types of construction		Version					Order code
Without flange	IM B3 [2]	**Standard**		**A**			–
With flange	IM B5 [2]	With additional charge		**F**			–
With flange	IM B14 [2]	With additional charge		**K**			–
For other types of construction and more information, see from page 3/107				■			**...**
Motor protection		Version					Order code
Without		**Standard**			**A**		–
PTC thermistor with 1 or 3 temperature sensors (frame sizes 80, 90 or 100 to 200)		With additional charge			**B**		–
For other motor protection and more information, see from page 3/120					■		**...**
Terminal box position		Version					
Terminal box at top		**Standard**				**4**	
For other terminal box positions and more information, see from page 3/123						■	
Special versions							Order code(s)
For options, see from page 3/126			**1LE1001- ....**	■-■■■■		**-Z**	**...+...+...+...**

[1] Operating values at rated power for 60 Hz are stored in the SPC.

[2] Types derived from IM B3 (IM B6/7/8, IM V6, and IM V5), from IM B5 (IM V3 and IM V1) and from IM B14 (IM V19 and IM V18) are possible, provided that no requirements exist for condensation drainage holes (**H03**) or stamping of the type on the rating plate. The basic type IM B3, IM B5, or IM B14 is stamped as standard on the rating plate. For orders with condensation drainage holes (**H03**), the type must be specified.

© Innomotics 2024

Selection and ordering data

P_{rated}, 50 Hz/ P50 kW	P_{rated}, 60 Hz/ P60 [1] kW	Frame size FS	Operating values at rated power n_{rated}, 50 Hz rpm	T_{rated}, 50 Hz Nm	Different IE class 60 Hz/P60	η_{rated}, 50 Hz, 4/4 %	η_{rated}, 50 Hz, 3/4 %	η_{rated}, 50 Hz, 2/4 %	$\cos\varphi_{rated}$, 50 Hz, 4/4	I_{rated}, 50 Hz, 400 V A	T_{LR}/T_{rated}, 50 Hz	I_{LR}/I_{rated}, 50 Hz	T_B/T_{rated}, 50 Hz	L_{pfA}, 50 Hz dB(A)	L_{WA}, 50 Hz dB(A)	Aluminum series 1LE1001 Article No.	$m_{IM\ B3}$ kg	J kgm²
_ Cooling: Self-ventilated (IC411) or with order code F90 forced-air cooled without external fan and fan cover (IC418)																		
_ Efficiency according to IEC 60034-30-1: IE2 High Efficiency, service factor (SF) 1.15																		
_ Insulation: Thermal class 155 (temperature class F), IP55 degree of protection, utilization in accordance with thermal class 130 (temperature class B)																		
6-pole: 1000 rpm at 50 Hz, 1200 rpm at 60 Hz [1]																		
2.2	**2.55**	**100 L**	965	22	IE1	81.8	83.3	82.7	0.76	5.1	1.7	4.9	2.5	59	71	**1LE1001-1AC6** ■-■■■■	30	0.014
3	**3.45**	**112 M**	965	29.5		83.3	84	82.7	0.74	7	2.1	5.4	2.7	62	74	**1LE1001-1BC6** ■-■■■■	34	0.017
7.5	**8.6**	**132 M**	970	74		87.2	88.1	87.1	0.75	16.6	2	5.6	2.6	63	75	**1LE1001-1CC6** ■-■■■■	64	0.046
15	**17.3**	**160 L**	975	147	IE1	89.7	90.4	89.7	0.75	32	2	5.2	2.4	67	79	**1LE1001-1DC6** ■-■■■■	115	0.12
18.5	**22**	**180 L**	975	181		90.4	90.9	90.5	0.77	38.5	2.3	6	2.9	67	80	**1LE1001-1EC6** ■-■■■■	130	0.206
30	**34.5**	**200 L**	975	295		91.7	92.5	92.4	0.77	61	2.6	6.3	2.7	68	75	**1LE1001-2AC6** ■-■■■■	192	0.381
8-pole: 750 rpm at 50 Hz, 900 rpm at 60 Hz [1]																		
15	**18**	**180 L**	720	199	IE1	88	89.2	89	0.73	33.5	2.2	4.9	2.5	67	75	**1LE1001-1ED6** ■-■■■■	151	0.263
18.5	**22**	**200 L**	720	245	IE1	88.6	89.9	90.2	0.78	38.5	2.6	5.8	3	65	72	**1LE1001-2AD6** ■-■■■■	198	0.416

Voltages		Version					Order code
50 Hz 230 VΔ/400 VY	60 Hz [1] 460 VY	**Standard**	**2**	**2**			–
50 Hz 400 VΔ/690 VY	60 Hz [1] 460 VΔ	**Standard**	**3**	**4**			–
50 Hz 500 VY		Without additional charge	**2**	**7**			–
50 Hz 500 VΔ		Without additional charge	**4**	**0**			–
For other voltages [1] and more information, see from page 3/101			**9**	**0**			**...**
Types of construction		Version					Order code
Without flange	IM B3 [2]	**Standard**		**A**			–
With flange	IM B5 [2]	With additional charge		**F**			–
With flange	IM B14 [2]	With additional charge		**K**			–
For other types of construction and more information, see from page 3/107				■			**...**
Motor protection		Version					Order code
Without		**Standard**			**A**		–
PTC thermistor with 3 temperature sensors		With additional charge			**B**		–
For other motor protection and more information, see from page 3/120					■		**...**
Terminal box position		Version					
Terminal box at top		**Standard**				**4**	
For other terminal box positions and more information, see from page 3/123						■	
Special versions							Order code(s)
For options, see from page 3/126			**1LE1001- ....**	■-■■■■		**-Z**	...+...+...+...

3

[1] Operating values at rated power for 60 Hz are stored in the SPC.

[2] Types derived from IM B3 (IM B6/7/8, IM V6, and IM V5), from IM B5 (IM V3 and IM V1) and from IM B14 (IM V19 and IM V18) are possible, provided that no requirements exist for condensation drainage holes (**H03**) or stamping of the type on the rating plate. The basic type IM B3, IM B5, or IM B14 is stamped as standard on the rating plate. For orders with condensation drainage holes (**H03**), the type must be specified.

© Innomotics 2024

Innomotics GP and Innomotics SD standard motors

IE2

Please note minimum legal efficiencies in the European Economic Area

Cast-iron series Innomotics SD 1LE1501 Basic Line – self-ventilated or forced-air cooled

Selection and ordering data

P_{rated}, 50 Hz/ P50 kW	P_{rated}, 60 Hz/ P60 [1] kW	Frame size FS	Operating values at rated power n_{rated}, 50 Hz rpm	T_{rated}, 50 Hz Nm	η_{rated}, 50 Hz, 4/4 %	η_{rated}, 50 Hz, 3/4 %	η_{rated}, 50 Hz, 2/4 %	$\cos\varphi_{rated}$, 50 Hz, 4/4	I_{rated}, 50 Hz, 400 V A	T_{LR}/T_{rated}, 50 Hz	I_{LR}/I_{rated}, 50 Hz	T_B/T_{rated}, 50 Hz	L_{pfA}, 50 Hz dB(A)	L_{WA}, 50 Hz dB(A)	Cast-iron series 1LE1501 – *Basic Line* Article No.	$m_{IM\,B3}$ kg	J kgm²
_ Cooling: Self-ventilated (IC411) or with order code F90 forced-air cooled without external fan and fan cover (IC418)																	
_ Efficiency according to IEC 60034-30-1: IE2 High Efficiency, service factor (SF) 1.15																	
_ Insulation: Thermal class 155 (temperature class F), IP55 degree of protection, utilization in accordance with thermal class 130 (temperature class B)																	
2-pole: 3000 rpm at 50 Hz, 3600 rpm at 60 Hz [1]																	
0.37	**0.43**	**71 M**	2770	1.28	69.5	70.5	67.9	0.81	0.95	2.5	4.1	2.5	58	69	**1LE1501-0CA2** ■-■■■■	12	0.00035
0.55	**0.63**	**71 M**	2780	1.89	74.1	75.2	72.9	0.8	1.34	2.6	4.6	2.6	58	69	**1LE1501-0CA3** ■-■■■■	13	0.00045
0.75	**0.86**	**80 M**	2805	2.55	77.4	80	80.1	0.84	1.67	1.9	4.9	2.3	60	71	**1LE1501-0DA2** ■-■■■■	16	0.0008
1.1	**1.27**	**80 M**	2835	3.7	79.6	81.3	80.9	0.83	2.4	2.7	6	3.1	60	71	**1LE1501-0DA3** ■-■■■■	18	0.0011
1.5	**1.75**	**90 S**	2900	4.95	81.3	81.7	79.7	0.84	3.15	2.7	6.9	3.6	65	77	**1LE1501-0EA0** ■-■■■■	23	0.0017
2.2	**2.55**	**90 L**	2890	7.3	83.2	83.7	82	0.85	4.5	2.5	7.1	3.7	65	77	**1LE1501-0EA4** ■-■■■■	25	0.0021
3	**3.45**	**100 L**	2905	9.9	84.6	85.5	84.6	0.84	6.1	2.3	7	3.3	67	79	**1LE1501-1AA4** ■-■■■■	32	0.0044
4	**4.55**	**112 M**	2930	13	85.8	86.1	84.7	0.83	8.1	2.8	8.1	3.4	71	79	**1LE1501-1BA2** ■-■■■■	37	0.0062
5.5	**6.3**	**132 S**	2935	17.9	87	87.8	86.8	0.91	10	2.1	7.3	2.9	72	80	**1LE1501-1CA0** ■-■■■■	57	0.019
7.5	**8.6**	**132 S**	2950	24.5	88.1	88.5	87.6	0.87	14.1	2.2	7.5	3.1	68	80	**1LE1501-1CA1** ■-■■■■	61	0.024
11	**12.6**	**160 M**	2955	35.5	89.4	89.3	88	0.87	20.5	2.1	7.4	3.2	70	82	**1LE1501-1DA2** ■-■■■■	94	0.045
15	**17.3**	**160 M**	2940	48.5	90.3	90.5	89.4	0.86	28	2.5	7.9	3.5	76	84	**1LE1501-1DA3** ■-■■■■	97	0.0426
18.5	**21.3**	**160 L**	2955	60	90.9	91.2	90.6	0.88	33.5	2.9	7.9	3.6	70	82	**1LE1501-1DA4** ■-■■■■	111	0.061
22	**24.5**	**180 M**	2940	71	91.3	91.8	91.3	0.87	40	2.7	7.4	3.6	77	84	**1LE1501-1EA2** ■-■■■■	145	0.069
30	**33.5**	**200 L**	2960	97	92	92.3	91.8	0.87	54	2.5	6.9	3.3	78	85	**1LE1501-2AA4** ■-■■■■	205	0.13
37	**41.5**	**200 L**	2960	119	92.5	93	92.7	0.88	66	2.7	7.4	3.5	78	85	**1LE1501-2AA5** ■-■■■■	225	0.15
45	**51**	**225 M**	2965	145	92.9	93.1	92.5	0.88	79	2.7	7.8	3.7	76	89	**1LE1501-2BA2** ■-■■■■	295	0.23
55	**62**	**250 M**	2970	177	93.2	93.3	92.4	0.88	97	2.3	6.8	3.1	76	89	**1LE1501-2CA2** ■-■■■■	360	0.4
75	**84**	**280 S**	2978	240	93.8	93.6	92.4	0.86	134	2.5	7.2	3.2	76	89	**1LE1501-2DA0** ■-■■■■	490	0.71
90	**101**	**280 M**	2975	290	94.1	94.2	93.5	0.88	157	2.5	7.1	3.1	76	89	**1LE1501-2DA2** ■-■■■■	530	0.83
110	**123**	**315 S**	2982	350	94.3	94.2	93.3	0.9	187	2.4	7.3	3	77	91	**1LE1501-3AA0** ■-■■■■	720	1.3
132	**148**	**315 M**	2982	425	94.6	94.7	94.1	0.91	220	2.4	7.2	3.1	77	91	**1LE1501-3AA2** ■-■■■■	880	1.6
160	**180**	**315 L**	2982	510	94.8	94.9	94.3	0.92	265	2.3	7	3.1	80	95	**1LE1501-3AA4** ■-■■■■	930	1.8
200	**224**	**315 L**	2982	640	95	95.2	94.8	0.92	330	2.5	7.3	3	80	95	**1LE1501-3AA5** ■-■■■■	1130	2.2

Voltages [2]		Version					Order code
50 Hz 230 VΔ/400 VY	60 Hz [1] 460 VY	**Standard**	**2**	**2**			–
50 Hz 400 VΔ/690 VY	60 Hz [1] 460 VΔ	**Standard**	**3**	**4**			–
50 Hz 500 VY		Without additional charge	**2**	**7**			–
50 Hz 500 VΔ		Without additional charge	**4**	**0**			–
For other voltages [1] and more information, see from page 3/104			**9**	**0**			**...**
Types of construction		Version					Order code
Without flange	IM B3 [3]	**Standard**			**A**		–
With flange	IM B5 [3]	With additional charge			**F**		–
With flange	IM B14 [3]	With additional charge			**K**		–
For other types of construction and more information, see from page 3/111					■		**...**
Motor protection		Version					Order code
Without		**Standard**				**A**	–
PTC thermistor with 3 temperature sensors		With additional charge				**B**	–
For other motor protection and more information, see from page 3/121						■	**...**
Terminal box position		Version					
Terminal box at top		**Standard**					**4**
For other terminal box positions and more information, see from page 3/124							■
Special versions							Order code(s)
Forced-air cooled motors w/o ext. fan/fan cover (IC418)		**1LE1501-....** ■-■■■■ -Z					**F90+...+...+...**
For options, see from page 3/132		**1LE1501-....** ■-■■■■ -Z					**...+...+...+...**

[1] Operating values at rated power for 60 Hz are stored in the SPC.

[2] Parallel supply lines are required in the case of connection to ≤ 240 V. For frame size 315 with connection to ≤ 240 V, due to the high current, a drilled, removable entry plate (order code **R52**) or a larger terminal box (order code **R50**) can be used. Order codes **R52** and **R50** alter the motor dimensions.

[3] Types derived from IM B3 (IM B6/7/8, IM V6 and IM V5), from IM B5 (IM V3 and IM V1) and from IM B14 (IM V19 and IM V18) are possible, provided that no requirement exists for stamping of the type on the rating plate. The basic type IM B3, IM B5, or IM B14 is stamped as standard on the rating plate. If mounted in a different position, the position must be specified to ensure that the condensation drainage holes are positioned correctly.

© Innomotics 2024

Selection and ordering data

P_{rated}, 50 Hz/ P50 kW	P_{rated}, 60 Hz/ P60 [1] kW	Frame size FS	Operating values at rated power n_{rated}, 50 Hz rpm	T_{rated}, 50 Hz Nm	η_{rated}, 50 Hz, 4/4 %	η_{rated}, 50 Hz, 3/4 %	η_{rated}, 50 Hz, 2/4 %	$\cos\varphi_{rated}$, 50 Hz, 4/4	I_{rated}, 50 Hz, 400 V A	T_{LR}/T_{rated}, 50 Hz	I_{LR}/I_{rated}, 50 Hz	T_B/T_{rated}, 50 Hz	L_{pfA}, 50 Hz dB(A)	L_{WA}, 50 Hz dB(A)	Cast-iron series 1LE1501 – *Basic Line* Article No.	$m_{IM\,B3}$ kg	J kgm²
_ Cooling: Self-ventilated (IC411) or with order code F90 forced-air cooled without external fan and fan cover (IC418)																	
_ Efficiency according to IEC 60034-30-1: IE2 High Efficiency, service factor (SF) 1.15																	
_ Insulation: Thermal class 155 (temperature class F), IP55 degree of protection, utilization in accordance with thermal class 130 (temperature class B)																	
4-pole: 1500 rpm at 50 Hz, 1800 rpm at 60 Hz [1]																	
0.25	**0.29**	**71 M**	1395	1.71	68.5	68.4	64.2	0.69	0.76	2.4	3.7	2.5	50	61	**1LE1501-0CB2** ■-■■■■	12	0.00076
0.37	**0.43**	**71 M**	1380	2.55	72.7	73.2	69.9	0.72	1.02	2.5	4	2.5	59	67	**1LE1501-0CB3** ■-■■■■	13	0.00095
0.55	**0.63**	**80 M**	1440	3.65	77.1	76.8	73.7	0.74	1.39	2.2	5.3	3.1	53	64	**1LE1501-0DB2** ■-■■■■	17	0.0017
0.75	**0.86**	**80 M**	1440	4.95	79.6	79.5	77	0.76	1.79	2.2	5.6	3.1	58	66	**1LE1501-0DB3** ■-■■■■	18	0.0021
1.1	**1.27**	**90 S**	1425	7.4	81.4	82.3	81.1	0.78	2.5	2.3	5.6	2.9	54	62	**1LE1501-0EB0** ■-■■■■	23	0.0028
1.5	**1.75**	**90 L**	1435	10	82.8	83.5	82.2	0.79	3.3	2.6	6.4	3.4	56	68	**1LE1501-0EB4** ■-■■■■	25	0.0036
2.2	**2.55**	**100 L**	1455	14.4	84.3	85.1	84.2	0.81	4.65	2.1	6.9	3.3	60	72	**1LE1501-1AB4** ■-■■■■	32	0.0086
3	**3.45**	**100 L**	1455	19.7	85.5	86.4	85.6	0.82	6.2	2	6.9	3.1	60	72	**1LE1501-1AB5** ■-■■■■	36	0.011
4	**4.55**	**112 M**	1460	26	86.6	87.3	86.4	0.81	8.2	2.5	7.1	3.2	58	70	**1LE1501-1BB2** ■-■■■■	40	0.014
5.5	**6.3**	**132 S**	1465	36	87.7	88.4	87.6	0.8	11.3	2.3	6.9	2.9	64	76	**1LE1501-1CB0** ■-■■■■	61	0.022
7.5	**8.6**	**132 M**	1465	49	88.7	89.8	89.8	0.83	14.7	2.3	6.9	2.9	64	76	**1LE1501-1CB2** ■-■■■■	67	0.028
11	**12.6**	**160 M**	1470	71	89.8	90.8	90.9	0.84	21	1.9	7	3	67	75	**1LE1501-1DB2** ■-■■■■	101	0.058
15	**17.3**	**160 L**	1475	97	90.6	91.2	90.8	0.85	28	2.3	7.3	3	65	77	**1LE1501-1DB4** ■-■■■■	110	0.071
18.5	**21.3**	**180 M**	1465	121	91.2	92	91.9	0.84	35	2.5	7.2	3.4	61	74	**1LE1501-1EB2** ■-■■■■	160	0.12
22	**25.3**	**180 L**	1465	143	91.6	92.2	91.9	0.84	41.5	2.6	7.3	3.5	69	76	**1LE1501-1EB4** ■-■■■■	170	0.13
30	**34.5**	**200 L**	1470	195	92.3	92.9	92.6	0.84	56	2.5	6.7	3.3	70	77	**1LE1501-2AB5** ■-■■■■	230	0.2
37	**42.5**	**225 S**	1470	240	92.7	93.5	93.5	0.88	65	2.3	6.6	2.9	66	79	**1LE1501-2BB0** ■-■■■■	280	0.42
45	**52**	**225 M**	1475	290	93.1	93.8	93.7	0.87	80	2.5	6.9	3.1	66	79	**1LE1501-2BB2** ■-■■■■	305	0.46
55	**63**	**250 M**	1480	355	93.5	93.9	93.5	0.85	100	2.7	6.8	3	66	79	**1LE1501-2CB2** ■-■■■■	385	0.75
75	**86**	**280 S**	1485	480	94	94.2	93.8	0.87	132	2.5	6.8	3	71	85	**1LE1501-2DB0** ■-■■■■	550	1.3
90	**104**	**280 M**	1486	580	94.2	94.3	93.6	0.87	159	2.6	7.3	3.1	71	85	**1LE1501-2DB2** ■-■■■■	570	1.4
110	**127**	**315 S**	1490	700	94.5	94.6	94	0.86	195	2.7	7.4	3	72	86	**1LE1501-3AB0** ■-■■■■	740	2
132	**152**	**315 M**	1490	850	94.7	94.9	94.6	0.87	230	2.7	7.1	2.9	75	89	**1LE1501-3AB2** ■-■■■■	870	2.3
160	**184**	**315 L**	1490	1030	94.9	95	94.5	0.87	280	2.8	7.2	3.1	76	91	**1LE1501-3AB4** ■-■■■■	940	2.8
200	**230**	**315 L**	1490	1280	95.1	95.3	94.7	0.87	350	3.1	7.5	3.2	77	92	**1LE1501-3AB5** ■-■■■■	1140	3.5

Voltages [2]		Version				Order code
50 Hz 230 VΔ/400 VY	60 Hz [1] 460 VY	**Standard**	**2**	**2**		–
50 Hz 400 VΔ/690 VY	60 Hz [1] 460 VΔ	**Standard**	**3**	**4**		–
50 Hz 500 VY		Without additional charge	**2**	**7**		–
50 Hz 500 VΔ		Without additional charge	**4**	**0**		–
For other voltages [1] and more information, see from page 3/104			**9**	**0**		**...**
Types of construction		Version				Order code
Without flange	IM B3 [3]	**Standard**		**A**		–
With flange	IM B5 [3]	With additional charge		**F**		–
With flange	IM B14 [3]	With additional charge		**K**		–
For other types of construction and more information, see from page 3/111				■		**...**
Motor protection		Version				Order code
Without		**Standard**			**A**	–
PTC thermistor with 3 temperature sensors		With additional charge			**B**	–
For other motor protection and more information, see from page 3/121					■	**...**
Terminal box position		Version				
Terminal box at top		**Standard**				**4**
For other terminal box positions and more information, see from page 3/124						■
Special versions						Order code(s)
Forced-air cooled motors w/o ext. fan/fan cover (IC418)			**1LE1501-....** ■-■■■■			**-Z F90+...+...+...**
For options, see from page 3/132			**1LE1501-....** ■-■■■■			**-Z ...+...+...+...**

[1] Operating values at rated power for 60 Hz are stored in the SPC.
[2] Parallel supply lines are required in the case of connection to ≤ 240 V. For frame size 315 with connection to ≤ 240 V, due to the high current, a drilled, removable entry plate (order code **R52**) or a larger terminal box (order code **R50**) can be used. Order codes **R52** and **R50** alter the motor dimensions.
[3] Types derived from IM B3 (IM B6/7/8, IM V6 and IM V5), from IM B5 (IM V3 and IM V1) and from IM B14 (IM V19 and IM V18) are possible, provided that no requirement exists for stamping of the type on the rating plate. The basic type IM B3, IM B5, or IM B14 is stamped as standard on the rating plate. If mounted in a different position, the position must be specified to ensure that the condensation drainage holes are positioned correctly.

© Innomotics 2024

Innomotics GP and Innomotics SD standard motors

IE2

Please note minimum legal efficiencies in the European Economic Area!

Cast-iron series Innomotics SD 1LE1501 Basic Line – self-ventilated or forced-air cooled

Selection and ordering data

P_{rated}, 50 Hz/ P50 kW	P_{rated}, 60 Hz/ P60 [1] kW	Frame size FS	Operating values at rated power n_{rated}, 50 Hz rpm	T_{rated}, 50 Hz Nm	Different IE class 60 Hz/P60	η_{rated}, 50 Hz, 4/4 %	η_{rated}, 50 Hz, 3/4 %	η_{rated}, 50 Hz, 2/4 %	$\cos\varphi_{rated}$, 50 Hz, 4/4	I_{rated}, 50 Hz, 400 V A	T_{LR}/T_{rated}, 50 Hz	I_{LR}/I_{rated}, 50 Hz	T_B/T_{rated}, 50 Hz	L_{pfA}, 50 Hz dB(A)	L_{WA}, 50 Hz dB(A)	Cast-iron series 1LE1501 – *Basic Line* Article No.	$m_{IM\,B3}$ kg	J kgm²
_ Cooling: Self-ventilated (IC411) or with order code F90 forced-air cooled without external fan and fan cover (IC418)																		
_ Efficiency according to IEC 60034-30-1: IE2 High Efficiency, service factor (SF) 1.15																		
_ Insulation: Thermal class 155 (temperature class F), IP55 degree of protection, utilization in accordance with thermal class 130 (temperature class B)																		
6-pole: 1000 rpm at 50 Hz, 1200 rpm at 60 Hz [1]																		
0.18	**0.21**	**71 M**	875	1.96		56.6	56.9	52.7	0.68	0.68	2.2	2.5	2.3	46	57	**1LE1501-0CC2** ■-■■■■	12	0.00077
0.25	**0.29**	**71 M**	870	2.75		61.6	62.7	59.2	0.7	0.84	2.3	2.6	2.3	46	57	**1LE1501-0CC3** ■-■■■■	13	0.00098
0.37	**0.43**	**80 M**	925	3.8		67.6	67.9	64.4	0.69	1.14	2.1	4	2.4	42	53	**1LE1501-0DC2** ■-■■■■	17	0.0017
0.55	**0.63**	**80 M**	935	5.6		73.1	73.8	70.8	0.66	1.65	2.5	4.4	2.9	42	53	**1LE1501-0DC3** ■-■■■■	19	0.0025
0.75	**0.86**	**90 S**	935	7.7		75.9	76.8	74.5	0.7	2.05	2	4.1	2.5	43	55	**1LE1501-0EC0** ■-■■■■	23	0.003
1.1	**1.27**	**90 L**	935	11.2	IE1	78.1	79.3	77.7	0.7	2.9	2.2	4.4	2.6	43	55	**1LE1501-0EC4** ■-■■■■	26	0.004
1.5	**1.75**	**100 L**	970	14.8		79.8	80.5	79	0.73	3.7	2	5.4	2.8	59	71	**1LE1501-1AC4** ■-■■■■	36	0.011
2.2	**2.55**	**112 M**	965	22		81.8	82.7	81.7	0.75	5.2	2	5	2.8	62	74	**1LE1501-1BC2** ■-■■■■	41	0.014
3	**3.45**	**132 S**	975	29.5		83.3	83.5	82	0.72	7.2	2.1	5.9	3.1	58	66	**1LE1501-1CC0** ■-■■■■	60	0.029
4	**4.55**	**132 M**	965	39.5		84.6	85.6	85.1	0.75	9.1	1.8	5.4	2.6	54	62	**1LE1501-1CC2** ■-■■■■	60	0.029
5.5	**6.3**	**132 M**	965	54		86	86.8	85.5	0.73	12.6	2.1	5.5	2.8	68	76	**1LE1501-1CC3** ■-■■■■	64	0.0385
7.5	**8.6**	**160 M**	985	73		87.2	87.9	87.2	0.8	15.5	2.2	6.1	2.6	64	72	**1LE1501-1DC2** ■-■■■■	114	0.098
11	**12.6**	**160 L**	978	107		88.7	89.3	88.6	0.79	22.5	2.4	6.1	2.6	57	65	**1LE1501-1DC4** ■-■■■■	116	0.1324
15	**18**	**180 L**	975	147		89.7	90.1	89.5	0.78	31	2.5	6	3.1	57	70	**1LE1501-1EC4** ■-■■■■	153	0.17
18.5	**22**	**200 L**	978	181	IE1	90.4	91.4	91.3	0.82	36	2.4	5.8	2.6	63	76	**1LE1501-2AC4** ■-■■■■	198	0.25
22	**26.5**	**200 L**	978	215	IE1	90.9	91.7	91.4	0.82	42.5	2.5	6.2	2.6	63	76	**1LE1501-2AC5** ■-■■■■	220	0.3
30	**36**	**225 M**	980	290	IE1	91.7	92.5	92.3	0.83	57	2.5	5.6	2.7	65	78	**1LE1501-2BC2** ■-■■■■	300	0.58
37	**44.5**	**250 M**	982	360	IE1	92.2	93.1	93.1	0.83	70	2.8	6	2.5	62	77	**1LE1501-2CC2** ■-■■■■	370	0.86
45	**54**	**280 S**	985	435	IE1	92.7	93.4	93.2	0.84	83	2.7	6.3	2.6	65	79	**1LE1501-2DC0** ■-■■■■	460	1.1
55	**66**	**280 M**	985	530	IE1	93.1	93.9	94	0.86	99	2.5	6.4	2.6	65	79	**1LE1501-2DC2** ■-■■■■	510	1.37
75	**90**	**315 S**	988	720	IE1	93.7	94	93.6	0.84	138	2.5	6.7	2.8	65	79	**1LE1501-3AC0** ■-■■■■	660	2.1
90	**108**	**315 M**	988	870	IE1	94	94.3	93.6	0.84	165	2.6	6.9	2.8	65	79	**1LE1501-3AC2** ■-■■■■	730	2.5
110	**132**	**315 L**	988	1060	IE1	94.3	94.6	94.5	0.86	196	2.7	7	2.8	68	82	**1LE1501-3AC4** ■-■■■■	940	3.6
132	**158**	**315 L**	988	1280		94.6	94.9	94.7	0.86	235	3	7.5	2.9	69	84	**1LE1501-3AC5** ■-■■■■	990	4.02
160	**192**	**315 L**	988	1550		94.8	94.7	94.4	0.86	285	3.1	7.7	3.3	69	84	**1LE1501-3AC6** ■-■■■■	1160	4.7

Voltages [2]		Version					Order code
50 Hz 230 VΔ/400 VY	60 Hz [1] 460 VY	**Standard**	**2**	**2**			–
50 Hz 400 VΔ/690 VY	60 Hz [1] 460 VΔ	**Standard**	**3**	**4**			–
50 Hz 500 VY		Without additional charge	**2**	**7**			–
50 Hz 500 VΔ		Without additional charge	**4**	**0**			–
For other voltages [1] and more information, see from page 3/104			**9**	**0**			**...**
Types of construction		Version					Order code
Without flange	IM B3 [3]	**Standard**			**A**		–
With flange	IM B5 [3]	With additional charge			**F**		–
With flange	IM B14 [3]	With additional charge			**K**		–
For other types of construction and more information, see from page 3/111					■		**...**
Motor protection		Version					Order code
Without		**Standard**				**A**	–
PTC thermistor with 3 temperature sensors		With additional charge				**B**	–
For other motor protection and more information, see from page 3/121						■	**...**
Terminal box position		Version					
Terminal box at top		**Standard**					**4**
For other terminal box positions and more information, see from page 3/124							■

Special versions		Order code(s)
Forced-air cooled motors w/o ext. fan/fan cover (IC418)	**1LE1501-....** ■-■■■■ **-Z**	**F90+...+...+...**
For options, see from page 3/132	**1LE1501-....** ■-■■■■ **-Z**	**...+...+...+...**

[1] Operating values at rated power for 60 Hz are stored in the SPC.

[2] Parallel supply lines are required in the case of connection to ≤ 240 V. For frame size 315 with connection to ≤ 240 V, due to the high current, a drilled, removable entry plate (order code **R52**) or a larger terminal box (order code **R50**) can be used. Order codes **R52** and **R50** alter the motor dimensions.

[3] Types derived from IM B3 (IM B6/7/8, IM V6 and IM V5), from IM B5 (IM V3 and IM V1) and from IM B14 (IM V19 and IM V18) are possible, provided that no requirement exists for stamping of the type on the rating plate. The basic type IM B3, IM B5, or IM B14 is stamped as standard on the rating plate. If mounted in a different position, the position must be specified to ensure that the condensation drainage holes are positioned correctly.

© Innomotics 2024

Selection and ordering data

P_{rated}, 50 Hz/ P50	P_{rated}, 60 Hz/ P60 [1]	Frame size	Operating values at rated power n_{rated}, 50 Hz	T_{rated}, 50 Hz	Different IE class 60 Hz/P60	η_{rated}, 50 Hz, 4/4	η_{rated}, 50 Hz, 3/4	η_{rated}, 50 Hz, 2/4	$\cos\varphi_{rated}$, 50 Hz, 4/4	I_{rated}, 50 Hz, 400 V	T_{LR}/T_{rated}, 50 Hz	I_{LR}/I_{rated}, 50 Hz	T_B/T_{rated}, 50 Hz	L_{pfA}, 50 Hz	L_{WA}, 50 Hz	Cast-iron series 1LE1501 – *Basic Line* Article No.		$m_{IM\,B3}$	J
kW	kW	FS	rpm	Nm		%	%	%		A				dB(A)	dB(A)			kg	kgm²
_ Cooling: Self-ventilated (IC411) or with order code F90 forced-air cooled without external fan and fan cover (IC418)																			
_ Efficiency according to IEC 60034-30-1: IE2 High Efficiency, service factor (SF) 1.15																			
_ Insulation: Thermal class 155 (temperature class F), IP55 degree of protection, utilization in accordance with thermal class 130 (temperature class B)																			
8-pole: 750 rpm at 50 Hz, 900 rpm at 60 Hz [1]																			
0.09	**0.11**	**71 M**	630	1.36	[4]	40.1	40.6	35.8	0.67	0.5	1.7	1.6	1.7	59	63	**1LE1501-0CD2**	■-■■■■	12	0.00077
0.12	**0.14**	**71 M**	640	1.79		39.8	39.3	34.5	0.66	0.66	1.8	1.8	1.8	48	59	**1LE1501-0CD3**	■-■■■■	13	0.001
0.18	**0.21**	**80 M**	690	2.5		45.9	43.6	37.8	0.6	0.93	1.7	2.2	2.1	51	62	**1LE1501-0DD2**	■-■■■■	17	0.00175
0.25	**0.29**	**80 M**	705	3.4		50.6	48.1	41.9	0.55	1.3	2	2.5	2.5	51	62	**1LE1501-0DD3**	■-■■■■	19	0.00246
0.37	**0.43**	**90 S**	675	5.2		56.1	55.6	49.6	0.71	1.34	1.4	2.6	1.7	53	65	**1LE1501-0ED0**	■-■■■■	23	0.00225
0.55	**0.63**	**90 L**	665	7.9		61.7	63.4	59.8	0.74	1.74	1.5	2.7	1.7	53	65	**1LE1501-0ED4**	■-■■■■	26	0.00305
0.75	**0.86**	**100 L**	705	10.2		66.2	65.7	61.5	0.61	2.7	1.5	3.2	2.1	60	72	**1LE1501-1AD4**	■-■■■■	32	0.0086
1.1	**1.27**	**100 L**	695	15.1		70.8	72.3	69.6	0.65	3.45	1.4	3.2	1.9	60	72	**1LE1501-1AD5**	■-■■■■	36	0.011
1.5	**1.75**	**112 M**	725	19.8		74.1	73.9	71.2	0.63	4.65	1.6	4	2.4	63	75	**1LE1501-1BD2**	■-■■■■	41	0.017
2.2	**2.55**	**132 S**	725	29		77.6	78.2	76.6	0.62	6.6	1.4	3.5	2	63	75	**1LE1501-1CD0**	■-■■■■	59	0.034
3	**3.45**	**132 M**	720	40	IE1	80	80.7	79.2	0.62	8.7	1.4	3.7	2	63	75	**1LE1501-1CD2**	■-■■■■	67	0.037
4	**4.55**	**160 M**	730	52		81.9	82.6	81.4	0.67	10.5	1.6	3.7	1.9	63	75	**1LE1501-1DD2**	■-■■■■	98	0.065
5.5	**6.3**	**160 M**	730	72		83.8	84.2	83	0.67	14.1	1.7	3.9	2	63	75	**1LE1501-1DD3**	■-■■■■	111	0.083
7.5	**8.6**	**160 L**	725	99		85.3	86.4	86	0.7	18.1	1.6	3.8	1.9	63	75	**1LE1501-1DD4**	■-■■■■	123	0.098
11	**13.2**	**180 L**	720	146	IE1	86.9	88	87.6	0.7	26	2.3	4.9	2.6	72	80	**1LE1501-1ED4**	■-■■■■	153	0.195
15	**18**	**200 L**	718	199		88	89.5	89.9	0.76	32.5	2.4	5.4	2.8	58	65	**1LE1501-2AD5**	■-■■■■	220	0.344
18.5	**22**	**225 S**	730	240	IE1	89	89.9	89.5	0.78	38.5	2.2	5.4	2.7	59	72	**1LE1501-2BD0**	■-■■■■	250	0.43
22	**26.5**	**225 M**	730	290		90.3	91.3	91.1	0.8	44	2.3	5.5	2.7	58	71	**1LE1501-2BD2**	■-■■■■	270	0.5
30	**36**	**250 M**	732	390		91.3	92.2	92	0.8	59	2.4	5.6	2.7	60	73	**1LE1501-2CD2**	■-■■■■	370	0.86
37	**44.5**	**280 S**	736	480		91.9	92.5	92.1	0.78	75	2.3	5.4	2.4	63	77	**1LE1501-2DD0**	■-■■■■	460	1.1
45	**54**	**280 M**	738	580		92.4	92.8	92.4	0.79	89	2.5	5.7	2.5	66	80	**1LE1501-2DD2**	■-■■■■	510	1.4
55	**66**	**315 S**	740	710		92.9	93.3	92.9	0.8	107	2.2	5.8	2.6	69	83	**1LE1501-3AD0**	■-■■■■	640	2
75	**90**	**315 M**	738	970		93.5	94.4	94.5	0.81	143	2.3	5.9	2.7	69	84	**1LE1501-3AD2**	■-■■■■	710	2.5
90	**108**	**315 L**	740	1160		93.5	94.3	94.4	0.83	167	2.2	5.8	2.5	69	84	**1LE1501-3AD4**	■-■■■■	860	3.1
110	**132**	**315 L**	740	1420		94.2	95	95.1	0.82	205	2.7	6.7	2.9	74	88	**1LE1501-3AD5**	■-■■■■	980	3.9

Voltages [2]		Version					Order code
50 Hz 230 VΔ/400 VY	60 Hz [1] 460 VY	**Standard**	**2**	**2**			–
50 Hz 400 VΔ/690 VY	60 Hz [1] 460 VΔ	**Standard**	**3**	**4**			–
50 Hz 500 VY		Without additional charge	**2**	**7**			–
50 Hz 500 VΔ		Without additional charge	**4**	**0**			–
For other voltages [1] and more information, see from page 3/104			**9**	**0**			**...**
Types of construction		Version					Order code
Without flange	IM B3 [3]	**Standard**			**A**		–
With flange	IM B5 [3]	With additional charge			**F**		–
With flange	IM B14 [3]	With additional charge			**K**		–
For other types of construction and more information, see from page 3/111					■		**...**
Motor protection		Version					Order code
Without		**Standard**				**A**	–
PTC thermistor with 3 temperature sensors		With additional charge				**B**	–
For other motor protection and more information, see from page 3/121						■	**...**
Terminal box position		Version					
Terminal box at top		**Standard**				**4**	
For other terminal box positions and more information, see from page 3/124						■	

Special versions			Order code(s)
Forced-air cooled motors w/o ext. fan/fan cover (IC418)	**1LE1501- . . . .**	■-■■■■ **-Z**	**F90+...+...+...**
For options, see from page 3/132	**1LE1501- . . . .**	■-■■■■ **-Z**	**...+...+...+...**

[1] Operating values at rated power for 60 Hz are stored in the SPC.

[2] Parallel supply lines are required in the case of connection to ≤ 240 V.
For frame size 315 with connection to ≤ 240 V, due to the high current, a drilled, removable entry plate (order code **R52**) or a larger terminal box (order code **R50**) can be used. Order codes **R52** and **R50** alter the motor dimensions.

[3] Types derived from IM B3 (IM B6/7/8, IM V6 and IM V5), from IM B5 (IM V3 and IM V1) and from IM B14 (IM V19 and IM V18) are possible, provided that no requirement exists for stamping of the type on the rating plate. The basic type IM B3, IM B5, or IM B14 is stamped as standard on the rating plate. If mounted in a different position, the position must be specified to ensure that the condensation drainage holes are positioned correctly.

[4] No IE class for 50 and 60 Hz because the motor is outside the validity for the efficiency classes according to IEC 60034-30-1:2014.

© Innomotics 2024

Selection and ordering data

P_{rated}, 50 Hz/ P50	P_{rated}, 60 Hz/ P60 [1]	Frame size	Operating values at rated power n_{rated}, 50 Hz	T_{rated}, 50 Hz	η_{rated}, 50 Hz, 4/4	η_{rated}, 50 Hz, 3/4	η_{rated}, 50 Hz, 2/4	$\cos\varphi_{rated}$, 50 Hz, 4/4	I_{rated}, 50 Hz, 400 V	T_{LR}/T_{rated}, 50 Hz	I_{LR}/I_{rated}, 50 Hz	T_B/T_{rated}, 50 Hz	L_{pfA}, 50 Hz	L_{WA}, 50 Hz	Cast-iron series 1LE1601 – *Performance Line* Article No.	$m_{IM\ B3}$	J
kW	kW	FS	rpm	Nm	%	%	%		A				dB(A)	dB(A)		kg	kgm²
_ Cooling: Self-ventilated (IC411) or with order code F90 forced-air cooled without external fan and fan cover (IC418)																	
_ Efficiency according to IEC 60034-30-1: IE2 High Efficiency, service factor (SF) 1.15																	
_ Insulation: Thermal class 155 (temperature class F), IP55 degree of protection, utilization in accordance with thermal class 130 (temperature class B)																	
2-pole: 3000 rpm at 50 Hz, 3600 rpm at 60 Hz [1]																	
3	**3.45**	**100 L**	2905	9.9	84.6	85.5	84.6	0.84	6.1	2.3	7	3.3	67	79	**1LE1601-1AA4** ■-■■■■	32	0.0044
4	**4.55**	**112 M**	2930	13	85.8	86.1	84.7	0.83	8.1	2.8	8.1	3.4	71	79	**1LE1601-1BA2** ■-■■■■	37	0.0062
5.5	**6.3**	**132 S**	2935	17.9	87	87.8	86.8	0.91	10	2.1	7.3	2.9	72	80	**1LE1601-1CA0** ■-■■■■	57	0.019
7.5	**8.6**	**132 S**	2950	24.5	88.1	88.5	87.6	0.87	14.1	2.2	7.5	3.1	68	80	**1LE1601-1CA1** ■-■■■■	61	0.024
11	**12.6**	**160 M**	2955	35.5	89.4	89.3	88	0.87	20.5	2.1	7.4	3.2	70	82	**1LE1601-1DA2** ■-■■■■	94	0.045
15	**17.3**	**160 M**	2940	48.5	90.3	90.5	89.4	0.86	28	2.5	7.9	3.5	76	84	**1LE1601-1DA3** ■-■■■■	97	0.0426
18.5	**21.3**	**160 L**	2955	60	90.9	91.2	90.6	0.88	33.5	2.9	7.9	3.6	70	82	**1LE1601-1DA4** ■-■■■■	111	0.061
22	**24.5**	**180 M**	2940	71	91.3	91.8	91.3	0.87	40	2.7	7.4	3.6	77	84	**1LE1601-1EA2** ■-■■■■	145	0.069
30	**33.5**	**200 L**	2960	97	92	92.3	91.8	0.87	54	2.5	6.9	3.3	78	85	**1LE1601-2AA4** ■-■■■■	205	0.13
37	**41.5**	**200 L**	2960	119	92.5	93	92.7	0.88	66	2.7	7.4	3.5	78	85	**1LE1601-2AA5** ■-■■■■	225	0.15
45	**51**	**225 M**	2965	145	92.9	93.1	92.5	0.88	79	2.7	7.8	3.7	76	89	**1LE1601-2BA2** ■-■■■■	295	0.23
55	**62**	**250 M**	2970	177	93.2	93.3	92.4	0.88	97	2.3	6.8	3.1	76	89	**1LE1601-2CA2** ■-■■■■	360	0.4
75	**84**	**280 S**	2978	240	93.8	93.6	92.4	0.86	134	2.5	7.2	3.2	76	89	**1LE1601-2DA0** ■-■■■■	490	0.71
90	**101**	**280 M**	2975	290	94.1	94.2	93.5	0.88	157	2.5	7.1	3.1	76	89	**1LE1601-2DA2** ■-■■■■	530	0.83
110	**123**	**315 S**	2982	350	94.3	94.2	93.3	0.9	187	2.4	7.3	3	77	91	**1LE1601-3AA0** ■-■■■■	720	1.3
132	**148**	**315 M**	2982	425	94.6	94.7	94.1	0.91	220	2.4	7.2	3.1	77	91	**1LE1601-3AA2** ■-■■■■	880	1.6
160	**180**	**315 L**	2982	510	94.8	94.9	94.3	0.92	265	2.3	7	3.1	80	95	**1LE1601-3AA4** ■-■■■■	930	1.8
200	**224**	**315 L**	2982	640	95	95.2	94.8	0.92	330	2.5	7.3	3	80	95	**1LE1601-3AA5** ■-■■■■	1130	2.2

Voltages [2]		Version					Order code
50 Hz 230 VΔ/400 VY	60 Hz [1] 460 VY	**Standard**	**2**	**2**			–
50 Hz 400 VΔ/690 VY	60 Hz [1] 460 VΔ	**Standard**	**3**	**4**			–
50 Hz 500 VY		Without additional charge	**2**	**7**			–
50 Hz 500 VΔ		Without additional charge	**4**	**0**			–
For other voltages [1] and more information, see from page 3/104			**9**	**0**			**...**
Types of construction		Version					Order code
Without flange	IM B3 [3]	**Standard**			**A**		–
With flange	IM B5 [3]	With additional charge			**F**		–
With flange	IM B14 [3]	With additional charge			**K**		–
For other types of construction and more information, see from page 3/111					■		**...**
Motor protection		Version					Order code
PTC thermistor with 3 temperature sensors		**Standard**				**B**	–
For other motor protection and more information, see from page 3/121						■	**...**
Terminal box position		Version					
Terminal box at top		**Standard**				**4**	
For other terminal box positions and more information, see from page 3/124						■	
Special versions							Order code(s)
Forced-air cooled motors w/o ext. fan/fan cover (IC418)		**1LE1601-....** ■-■■■■ -Z					**F90+...+...+...**
For options, see from page 3/132		**1LE1601-....** ■-■■■■ -Z					**...+...+...+...**

[1] Operating values at rated power for 60 Hz are stored in the SPC.

[2] Parallel supply lines are required in the case of connection to ≤ 240 V. For frame size 315 with connection to ≤ 240 V, due to the high current, a drilled, removable entry plate (order code **R52**) or a larger terminal box (order code **R50**) can be used. Order codes **R52** and **R50** alter the motor dimensions.

[3] Types derived from IM B3 (IM B6/7/8, IM V6 and IM V5), from IM B5 (IM V3 and IM V1) and from IM B14 (IM V19 and IM V18) are possible, provided that no requirement exists for stamping of the type on the rating plate. The basic type IM B3, IM B5, or IM B14 is stamped as standard on the rating plate. If mounted in a different position, the position must be specified to ensure that the condensation drainage holes are positioned correctly.

© Innomotics 2024

Selection and ordering data

P_{rated}, 50 Hz/ P50 kW	P_{rated}, 60 Hz/ P60 [1] kW	Frame size FS	Operating values at rated power n_{rated}, 50 Hz rpm	T_{rated}, 50 Hz Nm	η_{rated}, 50 Hz, 4/4 %	η_{rated}, 50 Hz, 3/4 %	η_{rated}, 50 Hz, 2/4 %	$\cos\varphi_{rated}$, 50 Hz, 4/4	I_{rated}, 50 Hz, 400 V A	T_{LR}/T_{rated}, 50 Hz	I_{LR}/I_{rated}, 50 Hz	T_B/T_{rated}, 50 Hz	L_{pfA}, 50 Hz dB(A)	L_{WA}, 50 Hz dB(A)	Cast-iron series 1LE1601 – *Performance Line* Article No.	$m_{IM\,B3}$ kg	J kgm²
_ Cooling: Self-ventilated (IC411) or with order code F90 forced-air cooled without external fan and fan cover (IC418)																	
_ Efficiency according to IEC 60034-30-1: IE2 High Efficiency, service factor (SF) 1.15																	
_ Insulation: Thermal class 155 (temperature class F), IP55 degree of protection, utilization in accordance with thermal class 130 (temperature class B)																	
4-pole: 1500 rpm at 50 Hz, 1800 rpm at 60 Hz [1]																	
2.2	**2.55**	**100 L**	1455	14.4	84.3	85.1	84.2	0.81	4.65	2.1	6.9	3.3	60	72	**1LE1601-1AB4** ■-■■■■	32	0.0086
3	**3.45**	**100 L**	1455	19.7	85.5	86.4	85.6	0.82	6.2	2	6.9	3.1	60	72	**1LE1601-1AB5** ■-■■■■	36	0.011
4	**4.55**	**112 M**	1460	26	86.6	87.3	86.4	0.81	8.2	2.5	7.1	3.2	58	70	**1LE1601-1BB2** ■-■■■■	40	0.014
5.5	**6.3**	**132 S**	1465	36	87.7	88.4	87.6	0.8	11.3	2.3	6.9	2.9	64	76	**1LE1601-1CB0** ■-■■■■	61	0.022
7.5	**8.6**	**132 M**	1465	49	88.7	89.8	89.8	0.83	14.7	2.3	6.9	2.9	64	76	**1LE1601-1CB2** ■-■■■■	67	0.028
11	**12.6**	**160 M**	1470	71	89.8	90.8	90.9	0.84	21	1.9	7	3	67	75	**1LE1601-1DB2** ■-■■■■	101	0.058
15	**17.3**	**160 L**	1475	97	90.6	91.2	90.8	0.85	28	2.3	7.3	3	65	77	**1LE1601-1DB4** ■-■■■■	110	0.071
18.5	**21.3**	**180 M**	1465	121	91.2	92	91.9	0.84	35	2.5	7.2	3.4	61	74	**1LE1601-1EB2** ■-■■■■	160	0.12
22	**25.3**	**180 L**	1465	143	91.6	92.2	91.9	0.84	41.5	2.6	7.3	3.5	69	76	**1LE1601-1EB4** ■-■■■■	170	0.13
30	**34.5**	**200 L**	1470	195	92.3	92.9	92.6	0.84	56	2.5	6.7	3.3	70	77	**1LE1601-2AB5** ■-■■■■	230	0.2
37	**42.5**	**225 S**	1470	240	92.7	93.5	93.5	0.88	65	2.3	6.6	2.9	66	79	**1LE1601-2BB0** ■-■■■■	280	0.42
45	**52**	**225 M**	1475	290	93.1	93.8	93.7	0.87	80	2.5	6.9	3.1	66	79	**1LE1601-2BB2** ■-■■■■	305	0.46
55	**63**	**250 M**	1480	355	93.5	93.9	93.5	0.85	100	2.7	6.8	3	66	79	**1LE1601-2CB2** ■-■■■■	385	0.75
75	**86**	**280 S**	1485	480	94	94.2	93.8	0.87	132	2.5	6.8	3	71	85	**1LE1601-2DB0** ■-■■■■	550	1.3
90	**104**	**280 M**	1486	580	94.2	94.3	93.6	0.87	159	2.6	7.3	3.1	71	85	**1LE1601-2DB2** ■-■■■■	570	1.4
110	**127**	**315 S**	1490	700	94.5	94.6	94	0.86	195	2.7	7.4	3	72	86	**1LE1601-3AB0** ■-■■■■	740	2
132	**152**	**315 M**	1490	850	94.7	94.9	94.6	0.87	230	2.7	7.1	2.9	75	89	**1LE1601-3AB2** ■-■■■■	870	2.3
160	**184**	**315 L**	1490	1030	94.9	95	94.5	0.87	280	2.8	7.2	3.1	76	91	**1LE1601-3AB4** ■-■■■■	940	2.8
200	**230**	**315 L**	1490	1280	95.1	95.3	94.7	0.87	350	3.1	7.5	3.2	77	92	**1LE1601-3AB5** ■-■■■■	1140	3.5

Voltages [2]		Version					Order code
50 Hz 230 VΔ/400 VY	60 Hz [1] 460 VY	**Standard**	**2**	**2**			–
50 Hz 400 VΔ/690 VY	60 Hz [1] 460 VΔ	**Standard**	**3**	**4**			–
50 Hz 500 VY		Without additional charge	**2**	**7**			–
50 Hz 500 VΔ		Without additional charge	**4**	**0**			–
For other voltages [1] and more information, see from page 3/104			**9**	**0**			**...**
Types of construction		Version					Order code
Without flange	IM B3 [3]	**Standard**			**A**		–
With flange	IM B5 [3]	With additional charge			**F**		–
With flange	IM B14 [3]	With additional charge			**K**		–
For other types of construction and more information, see from page 3/111					■		**...**
Motor protection		Version					Order code
PTC thermistor with 3 temperature sensors		**Standard**				**B**	–
For other motor protection and more information, see from page 3/121						■	**...**
Terminal box position		Version					
Terminal box at top		**Standard**					**4**
For other terminal box positions and more information, see from page 3/124							■

Special versions		Order code(s)
Forced-air cooled motors w/o ext. fan/fan cover (IC418)	**1LE1601- . . . .** ■-■■■■ **-Z**	**F90+...+...+...**
For options, see from page 3/132	**1LE1601- . . . .** ■-■■■■ **-Z**	**...+...+...+...**

[1] Operating values at rated power for 60 Hz are stored in the SPC.
[2] Parallel supply lines are required in the case of connection to ≤ 240 V.
For frame size 315 with connection to ≤ 240 V, due to the high current, a drilled, removable entry plate (order code **R52**) or a larger terminal box (order code **R50**) can be used. Order codes **R52** and **R50** alter the motor dimensions.

[3] Types derived from IM B3 (IM B6/7/8, IM V6 and IM V5), from IM B5 (IM V3 and IM V1) and from IM B14 (IM V19 and IM V18) are possible, provided that no requirement exists for stamping of the type on the rating plate. The basic type IM B3, IM B5, or IM B14 is stamped as standard on the rating plate. If mounted in a different position, the position must be specified to ensure that the condensation drainage holes are positioned correctly.

© Innomotics 2024

Innomotics GP and Innomotics SD standard motors

IE2

Please note minimum legal efficiencies in the European Economic Area

Cast-iron series Innomotics SD 1LE1601 Performance Line – self-ventilated or forced-air cooled

Selection and ordering data

P_{rated}, 50 Hz/ P50	P_{rated}, 60 Hz/ P60 [1]	Frame size	Operating values at rated power n_{rated}, 50 Hz	T_{rated}, 50 Hz	Different IE class 60 Hz/P60	η_{rated}, 50 Hz, 4/4	η_{rated}, 50 Hz, 3/4	η_{rated}, 50 Hz, 2/4	$\cos\varphi_{rated}$, 50 Hz, 4/4	I_{rated}, 50 Hz, 400 V	T_{LR}/T_{rated}, 50 Hz	I_{LR}/I_{rated}, 50 Hz	T_B/T_{rated}, 50 Hz	L_{pfA}, 50 Hz	L_{WA}, 50 Hz	Cast-iron series 1LE1601 – *Performance Line* Article No.	$m_{IM\,B3}$	J
kW	kW	FS	rpm	Nm		%	%	%		A				dB(A)	dB(A)		kg	kgm²
_ Cooling: Self-ventilated (IC411) or with order code F90 forced-air cooled without external fan and fan cover (IC418)																		
_ Efficiency according to IEC 60034-30-1: IE2 High Efficiency, service factor (SF) 1.15																		
_ Insulation: Thermal class 155 (temperature class F), IP55 degree of protection, utilization in accordance with thermal class 130 (temperature class B)																		
6-pole: 1000 rpm at 50 Hz, 1200 rpm at 60 Hz [1]																		
1.5	**1.75**	**100 L**	970	14.8		79.8	80.5	79	0.73	3.7	2	5.4	2.8	59	71	**1LE1601-1AC4** ■-■■■■	36	0.011
2.2	**2.55**	**112 M**	965	22		81.8	82.7	81.7	0.75	5.2	2	5	2.8	62	74	**1LE1601-1BC2** ■-■■■■	41	0.014
3	**3.45**	**132 S**	975	29.5		83.3	83.5	82	0.72	7.2	2.1	5.9	3.1	58	66	**1LE1601-1CC0** ■-■■■■	60	0.029
4	**4.55**	**132 M**	965	39.5		84.6	85.6	85.1	0.75	9.1	1.8	5.4	2.6	54	62	**1LE1601-1CC2** ■-■■■■	60	0.029
5.5	**6.3**	**132 M**	965	54		86	86.8	85.5	0.73	12.6	2.1	5.5	2.8	68	76	**1LE1601-1CC3** ■-■■■■	64	0.0385
7.5	**8.6**	**160 M**	985	73		87.2	87.9	87.2	0.8	15.5	2.2	6.1	2.6	64	72	**1LE1601-1DC2** ■-■■■■	114	0.098
11	**12.6**	**160 L**	978	107		88.7	89.3	88.6	0.79	22.5	2.4	6.1	2.6	57	65	**1LE1601-1DC4** ■-■■■■	116	0.1324
15	**18**	**180 L**	975	147		89.7	90.1	89.5	0.78	31	2.5	6	3.1	57	70	**1LE1601-1EC4** ■-■■■■	153	0.17
18.5	**22**	**200 L**	978	181	IE1	90.4	91.4	91.3	0.82	36	2.4	5.8	2.6	63	76	**1LE1601-2AC4** ■-■■■■	198	0.25
22	**26.5**	**200 L**	978	215	IE1	90.9	91.7	91.4	0.82	42.5	2.5	6.2	2.6	63	76	**1LE1601-2AC5** ■-■■■■	220	0.3
30	**36**	**225 M**	980	290	IE1	91.7	92.5	92.3	0.83	57	2.5	5.6	2.7	65	78	**1LE1601-2BC2** ■-■■■■	300	0.58
37	**44.5**	**250 M**	982	360	IE1	92.2	93.1	93.1	0.83	70	2.8	6	2.5	62	77	**1LE1601-2CC2** ■-■■■■	370	0.86
45	**54**	**280 S**	985	435	IE1	92.7	93.4	93.2	0.84	83	2.7	6.3	2.6	65	79	**1LE1601-2DC0** ■-■■■■	460	1.1
55	**66**	**280 M**	985	530	IE1	93.1	93.9	94	0.86	99	2.5	6.4	2.6	65	79	**1LE1601-2DC2** ■-■■■■	510	1.37
75	**90**	**315 S**	988	720	IE1	93.7	94	93.6	0.84	138	2.5	6.7	2.8	65	79	**1LE1601-3AC0** ■-■■■■	660	2.1
90	**108**	**315 M**	988	870	IE1	94	94.3	93.6	0.84	165	2.6	6.9	2.8	65	79	**1LE1601-3AC2** ■-■■■■	730	2.5
110	**132**	**315 L**	988	1060	IE1	94.3	94.6	94.5	0.86	196	2.7	7	2.8	68	82	**1LE1601-3AC4** ■-■■■■	940	3.6
132	**158**	**315 L**	988	1280		94.6	94.9	94.7	0.86	235	3	7.5	2.9	69	84	**1LE1601-3AC5** ■-■■■■	990	4.02
160	**192**	**315 L**	988	1550		94.8	94.7	94.4	0.86	285	3.1	7.7	3.3	69	84	**1LE1601-3AC6** ■-■■■■	1160	4.7

Voltages [2]		Version					Order code
50 Hz 230 VΔ/400 VY	60 Hz [1] 460 VY	**Standard**	**2**	**2**			–
50 Hz 400 VΔ/690 VY	60 Hz [1] 460 VΔ	**Standard**	**3**	**4**			–
50 Hz 500 VY		Without additional charge	**2**	**7**			–
50 Hz 500 VΔ		Without additional charge	**4**	**0**			–
For other voltages [1] and more information, see from page 3/104			**9**	**0**			**...**
Types of construction		Version					Order code
Without flange	IM B3 [3]	**Standard**		**A**			–
With flange	IM B5 [3]	With additional charge		**F**			–
With flange	IM B14 [3]	With additional charge		**K**			–
For other types of construction and more information, see from page 3/111				■			**...**
Motor protection		Version					Order code
PTC thermistor with 3 temperature sensors		**Standard**			**B**		–
For other motor protection and more information, see from page 3/121					■		**...**
Terminal box position		Version					
Terminal box at top		**Standard**				**4**	
For other terminal box positions and more information, see from page 3/124						■	

Special versions		Order code(s)
Forced-air cooled motors w/o ext. fan/fan cover (IC418)	**1LE1601-....** ■-■■■■ **-Z**	**F90+...+...+...**
For options, see from page 3/132	**1LE1601-....** ■-■■■■ **-Z**	**...+...+...+...**

[1] Operating values at rated power for 60 Hz are stored in the SPC.

[2] Parallel supply lines are required in the case of connection to ≤ 240 V. For frame size 315 with connection to ≤ 240 V, due to the high current, a drilled, removable entry plate (order code **R52**) or a larger terminal box (order code **R50**) can be used. Order codes **R52** and **R50** alter the motor dimensions.

[3] Types derived from IM B3 (IM B6/7/8, IM V6 and IM V5), from IM B5 (IM V3 and IM V1) and from IM B14 (IM V19 and IM V18) are possible, provided that no requirement exists for stamping of the type on the rating plate. The basic type IM B3, IM B5, or IM B14 is stamped as standard on the rating plate. If mounted in a different position, the position must be specified to ensure that the condensation drainage holes are positioned correctly.

© Innomotics 2024

Selection and ordering data

P_{rated}, 50 Hz/ P50 kW	P_{rated}, 60 Hz/ P60 [1] kW	Frame size FS	Operating values at rated power n_{rated}, 50 Hz rpm	T_{rated}, 50 Hz Nm	Different IE class 60 Hz/P60	η_{rated}, 50 Hz, 4/4 %	η_{rated}, 50 Hz, 3/4 %	η_{rated}, 50 Hz, 2/4 %	$\cos\varphi_{rated}$, 50 Hz, 4/4	I_{rated}, 50 Hz, 400 V A	T_{LR}/T_{rated}, 50 Hz	I_{LR}/I_{rated}, 50 Hz	T_B/T_{rated}, 50 Hz	L_{pfA}, 50 Hz dB(A)	L_{WA}, 50 Hz dB(A)	Cast-iron series 1LE1601 – *Performance Line* Article No.	$m_{IM\,B3}$ kg	J kgm²
_ Cooling: Self-ventilated (IC411) or with order code F90 forced-air cooled without external fan and fan cover (IC418)																		
_ Efficiency according to IEC 60034-30-1: IE2 High Efficiency, service factor (SF) 1.15																		
_ Insulation: Thermal class 155 (temperature class F), IP55 degree of protection, utilization in accordance with thermal class 130 (temperature class B)																		
8-pole: 750 rpm at 50 Hz, 900 rpm at 60 Hz [1]																		
0.75	**0.86**	**100 L**	705	10.2		66.2	65.7	61.5	0.61	2.7	1.5	3.2	2.1	60	72	**1LE1601-1AD4** ■-■■■■	32	0.0086
1.1	**1.27**	**100 L**	695	15.1		70.8	72.3	69.6	0.65	3.45	1.4	3.2	1.9	60	72	**1LE1601-1AD5** ■-■■■■	36	0.011
1.5	**1.75**	**112 M**	725	19.8		74.1	73.9	71.2	0.63	4.65	1.6	4	2.4	63	75	**1LE1601-1BD2** ■-■■■■	41	0.017
2.2	**2.55**	**132 S**	725	29		77.6	78.2	76.6	0.62	6.6	1.4	3.5	2	63	75	**1LE1601-1CD0** ■-■■■■	59	0.034
3	**3.45**	**132 M**	720	40	IE1	80	80.7	79.2	0.62	8.7	1.4	3.7	2	63	75	**1LE1601-1CD2** ■-■■■■	67	0.037
4	**4.55**	**160 M**	730	52		81.9	82.6	81.4	0.67	10.5	1.6	3.7	1.9	63	75	**1LE1601-1DD2** ■-■■■■	98	0.065
5.5	**6.3**	**160 M**	730	72		83.8	84.2	83	0.67	14.1	1.7	3.9	2	63	75	**1LE1601-1DD3** ■-■■■■	111	0.083
7.5	**8.6**	**160 L**	725	99		85.3	86.4	86	0.7	18.1	1.6	3.8	1.9	63	75	**1LE1601-1DD4** ■-■■■■	123	0.098
11	**13.2**	**180 L**	720	146	IE1	86.9	88	87.6	0.7	26	2.3	4.9	2.6	72	80	**1LE1601-1ED4** ■-■■■■	153	0.195
15	**18**	**200 L**	718	199		88	89.5	89.9	0.76	32.5	2.4	5.4	2.8	58	65	**1LE1601-2AD5** ■-■■■■	220	0.344
18.5	**22**	**225 S**	730	240	IE1	89	89.9	89.5	0.78	38.5	2.2	5.4	2.7	59	72	**1LE1601-2BD0** ■-■■■■	250	0.43
22	**26.5**	**225 M**	730	290		90.3	91.3	91.1	0.8	44	2.3	5.5	2.7	58	71	**1LE1601-2BD2** ■-■■■■	270	0.5
30	**36**	**250 M**	732	390		91.3	92.2	92	0.8	59	2.4	5.6	2.7	60	73	**1LE1601-2CD2** ■-■■■■	370	0.86
37	**44.5**	**280 S**	736	480		91.9	92.5	92.1	0.78	75	2.3	5.4	2.4	63	77	**1LE1601-2DD0** ■-■■■■	460	1.1
45	**54**	**280 M**	738	580		92.4	92.8	92.4	0.79	89	2.5	5.7	2.5	66	80	**1LE1601-2DD2** ■-■■■■	510	1.4
55	**66**	**315 S**	740	710		92.9	93.3	92.9	0.8	107	2.2	5.8	2.6	69	83	**1LE1601-3AD0** ■-■■■■	640	2
75	**90**	**315 M**	738	970		93.5	94.4	94.5	0.81	143	2.3	5.9	2.7	69	84	**1LE1601-3AD2** ■-■■■■	710	2.5
90	**108**	**315 L**	740	1160		93.5	94.3	94.4	0.83	167	2.2	5.8	2.5	69	84	**1LE1601-3AD4** ■-■■■■	860	3.1
110	**132**	**315 L**	740	1420		94.2	95	95.1	0.82	205	2.7	6.7	2.9	74	88	**1LE1601-3AD5** ■-■■■■	980	3.9

Voltages [2]		Version					Order code
50 Hz 230 VΔ/400 VY	60 Hz [1] 460 VY	**Standard**	**2**	**2**			–
50 Hz 400 VΔ/690 VY	60 Hz [1] 460 VΔ	**Standard**	**3**	**4**			–
50 Hz 500 VY		Without additional charge	**2**	**7**			–
50 Hz 500 VΔ		Without additional charge	**4**	**0**			–
For other voltages [1] and more information, see from page 3/104			**9**	**0**			**...**
Types of construction		Version					Order code
Without flange	IM B3 [3]	**Standard**		**A**			–
With flange	IM B5 [3]	With additional charge		**F**			–
With flange	IM B14 [3]	With additional charge		**K**			–
For other types of construction and more information, see from page 3/111				■			**...**
Motor protection		Version					Order code
PTC thermistor with 3 temperature sensors		**Standard**			**B**		–
For other motor protection and more information, see from page 3/121					■		**...**
Terminal box position		Version					
Terminal box at top		**Standard**				**4**	
For other terminal box positions and more information, see from page 3/124						■	

Special versions			Order code(s)
Forced-air cooled motors w/o ext. fan/fan cover (IC418)	**1LE1601- . . . .**	■-■■■■ **-Z**	**F90+...+...+...**
For options, see from page 3/132	**1LE1601- . . . .**	■-■■■■ **-Z**	**...+...+...+...**

[1] Operating values at rated power for 60 Hz are stored in the SPC.

[2] Parallel supply lines are required in the case of connection to ≤ 240 V.
For frame size 315 with connection to ≤ 240 V, due to the high current, a drilled, removable entry plate (order code **R52**) or a larger terminal box (order code **R50**) can be used. Order codes **R52** and **R50** alter the motor dimensions.

[3] Types derived from IM B3 (IM B6/7/8, IM V6 and IM V5), from IM B5 (IM V3 and IM V1) and from IM B14 (IM V19 and IM V18) are possible, provided that no requirement exists for stamping of the type on the rating plate. The basic type IM B3, IM B5, or IM B14 is stamped as standard on the rating plate. If mounted in a different position, the position must be specified to ensure that the condensation drainage holes are positioned correctly..

© Innomotics 2024

Selection and ordering data

P_{rated}, 50 Hz/ P50	P_{rated}, 60 Hz/ P60 [1]	Frame size	Operating values at rated power n_{rated}, 50 Hz	T_{rated}, 50 Hz	Different IE class 60 Hz/P60	η_{rated}, 50 Hz, 4/4	η_{rated}, 50 Hz, 3/4	η_{rated}, 50 Hz, 2/4	$\cos\varphi_{rated}$, 50 Hz, 4/4	I_{rated}, 50 Hz, 400 V	T_{LR}/T_{rated}, 50 Hz	I_{LR}/I_{rated}, 50 Hz	T_B/T_{rated}, 50 Hz	L_{pfA}, 50 Hz	L_{WA}, 50 Hz	Cast-iron series 1LE1501 – *Basic Line* Article No.	$m_{IM\ B3}$	J
kW	kW	FS	rpm	Nm		%	%	%		A				dB(A)	dB(A)		kg	kgm²
_ Cooling: Self-ventilated (IC411) or with order code F90 forced-air cooled without external fan and fan cover (IC418)																		
_ Efficiency according to IEC 60034-30-1: IE2 High Efficiency, service factor (SF) 1.15																		
_ Insulation: Thermal class 155 (temperature class F), IP55 degree of protection, utilization in accordance with thermal class 130 (temperature class B)																		
2-pole: 3000 rpm at 50 Hz, 3600 rpm at 60 Hz [1]																		
4	**4.55**	**100 L**	2905	13.1		85.8	86.9	86.5	0.86	7.8	2.5	7.6	3.5	67	79	**1LE1501-1AA6** ■-■■■■	37	0.0054
5.5	**6.3**	**112 M**	2945	17.8		87	87.8	87.4	0.88	10.4	2.3	8.5	3.8	69	81	**1LE1501-1BA6** ■-■■■■	43	0.012
11	**12.6**	**132 M**	2915	36		89.4	91	92.2	0.93	19.1	2.2	7.9	3.1	73	81	**1LE1501-1CA6** ■-■■■■	74	0.023
22	**25.3**	**160 L**	2955	71		91.3	91.8	91.4	0.89	39	3.1	8.4	3.7	70	82	**1LE1501-1DA6** ■-■■■■	123	0.068
30	**33.5**	**180 L**	2940	97		92	92.6	92.3	0.89	53	2.3	7.8	3.4	76	83	**1LE1501-1EA6** ■-■■■■	175	0.094
45	**51**	**200 L**	2950	146		92.9	93.2	92.9	0.87	81	2.5	7.1	3.2	77	84	**1LE1501-2AA6** ■-■■■■	245	0.176
55	**62**	**225 M**	2960	177		93.2	93.6	93.2	0.88	97	2.5	7	3.3	76	89	**1LE1501-2BA6** ■-■■■■	320	0.26
75	**84**	**250 M**	2970	240		93.8	93.6	92.6	0.84	137	2.2	7	3.3	75	89	**1LE1501-2CA6** ■-■■■■	390	0.463
110	**123**	**280 M**	2978	355		94.3	94.5	94.1	0.9	187	2.9	8.5	3.6	80	91	**1LE1501-2DA6** ■-■■■■	650	1.2
4-pole: 1500 rpm at 50 Hz, 1800 rpm at 60 Hz [1]																		
4	**4.55**	**100 L**	1460	26		86.6	88	87.5	0.8	8.3	2.2	7.5	3.5	60	72	**1LE1501-1AB6** ■-■■■■	41	0.014
5.5	**6.3**	**112 M**	1460	36		87.7	88.2	87.2	0.81	11.2	2.5	7.1	3.2	58	70	**1LE1501-1BB6** ■-■■■■	44	0.017
11	**12.6**	**132 M**	1465	72		89.8	90.9	90.9	0.84	21	2.6	7.7	3.1	64	76	**1LE1501-1CB6** ■-■■■■	82	0.046
18.5	**21.3**	**160 L**	1475	120		91.2	91.8	91.3	0.85	34.5	2.5	7.7	3.3	65	77	**1LE1501-1DB6** ■-■■■■	129	0.085
30	**34.5**	**180 L**	1465	196		92.3	92.8	92.6	0.81	58	2.5	7.3	3.3	70	77	**1LE1501-1EB6** ■-■■■■	184	0.159
37	**42.5**	**200 L**	1470	240		92.7	93.3	93.1	0.84	69	2.4	7	3	68	75	**1LE1501-2AB6** ■-■■■■	240	0.246
55	**63**	**225 M**	1475	355		93.5	94.2	94.1	0.84	101	2.5	5.8	2.7	69	82	**1LE1501-2BB6** ■-■■■■	320	0.47
75	**86**	**250 M**	1480	485		94	94.5	94.3	0.86	134	2.3	6.2	2.8	74	87	**1LE1501-2CB6** ■-■■■■	440	0.85
110	**127**	**280 M**	1485	710		94.5	94.9	94.8	0.87	193	2.5	6.9	3	73	87	**1LE1501-2DB6** ■-■■■■	680	1.7

Voltages [2]		Version					Order code
50 Hz 230 VΔ/400 VY	60 Hz [1] 460 VY	**Standard**	**2**	**2**			–
50 Hz 400 VΔ/690 VY	60 Hz [1] 460 VΔ	**Standard**	**3**	**4**			–
50 Hz 500 VY		Without additional charge	**2**	**7**			–
50 Hz 500 VΔ		Without additional charge	**4**	**0**			–
For other voltages [1] and more information, see from page 3/104			**9**	**0**			**...**
Types of construction		Version					Order code
Without flange	IM B3 [3]	**Standard**			**A**		–
With flange	IM B5 [3]	With additional charge			**F**		–
With flange	IM B14 [3]	With additional charge			**K**		–
For other types of construction and more information, see from page 3/111					■		**...**
Motor protection		Version					Order code
Without		**Standard**				**A**	–
PTC thermistor with 3 temperature sensors		With additional charge				**B**	–
For other motor protection and more information, see from page 3/121						■	**...**
Terminal box position		Version					
Terminal box at top		**Standard**				**4**	
For other terminal box positions and more information, see from page 3/124						■	
Special versions							Order code(s)
For options, see from page 3/132							**1LE1501-....** ■-■■■■ **-Z** ...+...+...+...

[1] Operating values at rated power for 60 Hz are stored in the SPC.

[2] Parallel supply lines are required in the case of connection to ≤ 240 V. For frame size 315 with connection to ≤ 240 V, due to the high current, a drilled, removable entry plate (order code **R52**) or a larger terminal box (order code **R50**) can be used. Order codes **R52** and **R50** alter the motor dimensions.

[3] Types derived from IM B3 (IM B6/7/8, IM V6 and IM V5), from IM B5 (IM V3 and IM V1) and from IM B14 (IM V19 and IM V18) are possible, provided that no requirement exists for stamping of the type on the rating plate. The basic type IM B3, IM B5, or IM B14 is stamped as standard on the rating plate. If mounted in a different position, the position must be specified to ensure that the condensation drainage holes are positioned correctly.

© Innomotics 2024

Selection and ordering data

P_{rated}, 50 Hz/ P50 kW	P_{rated}, 60 Hz/ P60 [1] kW	Frame size FS	Operating values at rated power n_{rated}, 50 Hz rpm	T_{rated}, 50 Hz Nm	Different IE class 60 Hz/P60	η_{rated}, 50 Hz, 4/4 %	η_{rated}, 50 Hz, 3/4 %	η_{rated}, 50 Hz, 2/4 %	$\cos\varphi_{rated}$, 50 Hz, 4/4	I_{rated}, 50 Hz, 400 V A	T_{LR}/T_{rated}, 50 Hz	I_{LR}/I_{rated}, 50 Hz	T_B/T_{rated}, 50 Hz	L_{pfA}, 50 Hz dB(A)	L_{WA}, 50 Hz dB(A)	Cast-iron series 1LE1501 – *Basic Line* Article No.	$m_{IM\,B3}$ kg	J kgm²
_ Cooling: Self-ventilated (IC411) or with order code F90 forced-air cooled without external fan and fan cover (IC418)																		
_ Efficiency according to IEC 60034-30-1: IE2 High Efficiency, service factor (SF) 1.15																		
_ Insulation: Thermal class 155 (temperature class F), IP55 degree of protection, utilization in accordance with thermal class 130 (temperature class B)																		
6-pole: 1000 rpm at 50 Hz, 1200 rpm at 60 Hz [1]																		
2.2	**2.55**	**100 L**	965	22	IE1	81.8	83.3	82.7	0.76	5.1	1.7	4.9	2.5	59	71	**1LE1501-1AC6** ■-■■■■	41	0.014
3	**3.45**	**112 M**	965	29.5		83.3	84	82.7	0.74	7	2.1	5.4	2.7	62	74	**1LE1501-1BC6** ■-■■■■	44	0.017
7.5	**8.6**	**132 M**	970	74		87.2	88.1	87.1	0.75	16.6	2	5.6	2.6	63	75	**1LE1501-1CC6** ■-■■■■	83	0.046
15	**17.3**	**160 L**	975	147	IE1	89.7	90.4	89.7	0.75	32	2	5.2	2.4	67	79	**1LE1501-1DC6** ■-■■■■	147	0.12
18.5	**22**	**180 L**	975	181		90.4	90.9	90.5	0.77	38.5	2.3	6	2.9	67	80	**1LE1501-1EC6** ■-■■■■	166	0.206
30	**34.5**	**200 L**	975	295		91.7	92.5	92.4	0.77	61	2.6	6.3	2.7	68	75	**1LE1501-2AC6** ■-■■■■	243	0.381
37	**44.5**	**225 M**	978	360	IE1	92.2	93	92.9	0.83	70	2.5	6.3	2.9	64	77	**1LE1501-2BC6** ■-■■■■	325	0.67
45	**54**	**250 M**	985	435	IE1	92.7	93.4	93.4	0.84	83	2.4	6.6	2.7	67	81	**1LE1501-2CC6** ■-■■■■	410	1
75	**90**	**280 M**	986	730		93.7	94.3	94.4	0.85	136	3.2	7	2.9	66	80	**1LE1501-2DC6** ■-■■■■	570	1.8
8-pole: 750 rpm at 50 Hz, 900 rpm at 60 Hz [1]																		
15	**18**	**180 L**	720	199	IE1	88	89.2	89	0.73	33.5	2.2	4.9	2.5	67	75	**1LE1501-1ED6** ■-■■■■	187	0.263
18.5	**22**	**200 L**	720	245	IE1	88.6	89.9	90.2	0.78	38.5	2.6	5.8	3	65	72	**1LE1501-2AD6** ■-■■■■	250	0.416
30	**36**	**225 M**	732	390		90.8	92	92.1	0.76	63	2.8	6.1	3.2	62	76	**1LE1501-2BD6** ■-■■■■	325	0.67
37	**44.5**	**250 M**	730	485		91.6	92.6	92.7	0.83	70	2.3	5.5	2.6	63	77	**1LE1501-2CD6** ■-■■■■	405	1
55	**66**	**280 M**	736	710		92.9	93.4	93	0.8	107	2.5	5.9	2.5	70	81	**1LE1501-2DD6** ■-■■■■	550	1.6

Voltages [2]		Version					Order code
50 Hz 230 VΔ/400 VY	60 Hz [1] 460 VY	**Standard**	**2**	**2**			–
50 Hz 400 VΔ/690 VY	60 Hz [1] 460 VΔ	**Standard**	**3**	**4**			–
50 Hz 500 VY		Without additional charge	**2**	**7**			–
50 Hz 500 VΔ		Without additional charge	**4**	**0**			–
For other voltages [1] and more information, see from page 3/104			**9**	**0**			**...**
Types of construction		Version					Order code
Without flange	IM B3 [3]	**Standard**		**A**			–
With flange	IM B5 [3]	With additional charge		**F**			–
With flange	IM B14 [3]	With additional charge		**K**			–
For other types of construction and more information, see from page 3/111				■			**...**
Motor protection		Version					Order code
Without		**Standard**			**A**		–
PTC thermistor with 1 or 3 temperature sensors		With additional charge			**B**		–
For other motor protection and more information, see from page 3/121					■		**...**
Terminal box position		Version					
Terminal box at top		**Standard**				**4**	
For other terminal box positions and more information, see from page 3/124						■	
Special versions							Order code(s)
For options, see from page 3/132			**1LE1501-....**	■-■■■■		**-Z**	**...+...+...+...**

[1] Operating values at rated power for 60 Hz are stored in the SPC.
[2] Parallel supply lines are required in the case of connection to ≤ 240 V.
For frame size 315 with connection to ≤ 240 V, due to the high current, a drilled, removable entry plate (order code **R52**) or a larger terminal box (order code **R50**) can be used. Order codes **R52** and **R50** alter the motor dimensions.

[3] Types derived from IM B3 (IM B6/7/8, IM V6 and IM V5), from IM B5 (IM V3 and IM V1) and from IM B14 (IM V19 and IM V18) are possible, provided that no requirement exists for stamping of the type on the rating plate. The basic type IM B3, IM B5, or IM B14 is stamped as standard on the rating plate. If mounted in a different position, the position must be specified to ensure that the condensation drainage holes are positioned correctly.

© Innomotics 2024

Innomotics GP and Innomotics SD standard motors

IE2

Please note minimum legal efficiencies in the European Economic Area

Cast-iron series Innomotics SD 1LE1601 Performance Line with increased power – self-ventilated

Selection and ordering data

P_{rated}, 50 Hz/ P50	P_{rated}, 60 Hz/ P60 [1]	Frame size	Operating values at rated power n_{rated}, 50 Hz	T_{rated}, 50 Hz	Different IE class 60 Hz/P60	η_{rated}, 50 Hz, 4/4	η_{rated}, 50 Hz, 3/4	η_{rated}, 50 Hz, 2/4	$\cos\varphi_{rated}$, 50 Hz, 4/4	I_{rated}, 50 Hz, 400 V	T_{LR}/T_{rated}, 50 Hz	I_{LR}/I_{rated}, 50 Hz	T_B/T_{rated}, 50 Hz	L_{pfA}, 50 Hz	L_{WA}, 50 Hz	Cast-iron series 1LE1601 – *Performance Line* Article No.	$m_{IM\ B3}$	J
kW	kW	FS	rpm	Nm		%	%	%		A				dB(A)	dB(A)		kg	kgm²
_ Cooling: Self-ventilated (IC411) or with order code F90 forced-air cooled without external fan and fan cover (IC418)																		
_ Efficiency according to IEC 60034-30-1: IE2 High Efficiency, service factor (SF) 1.15																		
_ Insulation: Thermal class 155 (temperature class F), IP55 degree of protection, utilization in accordance with thermal class 130 (temperature class B)																		
2-pole: 3000 rpm at 50 Hz, 3600 rpm at 60 Hz [1]																		
4	**4.55**	**100 L**	2905	13.1		85.8	86.9	86.5	0.86	7.8	2.5	7.6	3.5	67	79	**1LE1601-1AA6** ■-■■■■	37	0.0054
5.5	**6.3**	**112 M**	2945	17.8		87	87.8	87.4	0.88	10.4	2.3	8.5	3.8	69	81	**1LE1601-1BA6** ■-■■■■	43	0.012
11	**12.6**	**132 M**	2915	36		89.4	91	92.2	0.93	19.1	2.2	7.9	3.1	73	81	**1LE1601-1CA6** ■-■■■■	74	0.023
22	**25.3**	**160 L**	2955	71		91.3	91.8	91.4	0.89	39	3.1	8.4	3.7	70	82	**1LE1601-1DA6** ■-■■■■	123	0.068
30	**33.5**	**180 L**	2940	97		92	92.6	92.3	0.89	53	2.3	7.8	3.4	76	83	**1LE1601-1EA6** ■-■■■■	175	0.094
45	**51**	**200 L**	2950	146		92.9	93.2	92.9	0.87	81	2.5	7.1	3.2	77	84	**1LE1601-2AA6** ■-■■■■	245	0.176
55	**62**	**225 M**	2960	177		93.2	93.6	93.2	0.88	97	2.5	7	3.3	76	89	**1LE1601-2BA6** ■-■■■■	320	0.26
75	**84**	**250 M**	2970	240		93.8	93.6	92.6	0.84	137	2.2	7	3.3	75	89	**1LE1601-2CA6** ■-■■■■	390	0.463
110	**123**	**280 M**	2978	355		94.3	94.5	94.1	0.9	187	2.9	8.5	3.6	80	91	**1LE1601-2DA6** ■-■■■■	650	1.2
4-pole: 1500 rpm at 50 Hz, 1800 rpm at 60 Hz [1]																		
4	**4.55**	**100 L**	1460	26		86.6	88	87.5	0.8	8.3	2.2	7.5	3.5	60	72	**1LE1601-1AB6** ■-■■■■	41	0.014
5.5	**6.3**	**112 M**	1460	36		87.7	88.2	87.2	0.81	11.2	2.5	7.1	3.2	58	70	**1LE1601-1BB6** ■-■■■■	44	0.017
11	**12.6**	**132 M**	1465	72		89.8	90.9	90.9	0.84	21	2.6	7.7	3.1	64	76	**1LE1601-1CB6** ■-■■■■	82	0.046
18.5	**21.3**	**160 L**	1475	120		91.2	91.8	91.3	0.85	34.5	2.5	7.7	3.3	65	77	**1LE1601-1DB6** ■-■■■■	129	0.085
30	**34.5**	**180 L**	1465	196		92.3	92.8	92.6	0.81	58	2.5	7.3	3.3	70	77	**1LE1601-1EB6** ■-■■■■	184	0.159
37	**42.5**	**200 L**	1470	240		92.7	93.3	93.1	0.84	69	2.4	7	3	68	75	**1LE1601-2AB6** ■-■■■■	240	0.246
55	**63**	**225 M**	1475	355		93.5	94.2	94.1	0.84	101	2.5	5.8	2.7	69	82	**1LE1601-2BB6** ■-■■■■	320	0.47
75	**86**	**250 M**	1480	485		94	94.5	94.3	0.86	134	2.3	6.2	2.8	74	87	**1LE1601-2CB6** ■-■■■■	440	0.85
110	**127**	**280 M**	1485	710		94.5	94.9	94.8	0.87	193	2.5	6.9	3	73	87	**1LE1601-2DB6** ■-■■■■	680	1.7

Voltages [2]		Version					Order code
50 Hz 230 VΔ/400 VY	60 Hz [1] 460 VY	**Standard**	**2**	**2**			–
50 Hz 400 VΔ/690 VY	60 Hz [1] 460 VΔ	**Standard**	**3**	**4**			–
50 Hz 500 VY		Without additional charge	**2**	**7**			–
50 Hz 500 VΔ		Without additional charge	**4**	**0**			–
For other voltages [1] and more information, see from page 3/104			**9**	**0**			**...**
Types of construction		Version					Order code
Without flange	IM B3 [3]	**Standard**		**A**			–
With flange	IM B5 [3]	With additional charge		**F**			–
With flange	IM B14 [3]	With additional charge		**K**			–
For other types of construction and more information, see from page 3/111				■			**...**
Motor protection		Version					Order code
PTC thermistor with 3 temperature sensors		**Standard**			**B**		–
For other motor protection and more information, see from page 3/121					■		**...**
Terminal box position		Version					
Terminal box at top		**Standard**				**4**	
For other terminal box positions and more information, see from page 3/124						■	
Special versions							Order code(s)
For options, see from page 3/132			**1LE1601-....**	■-■■■■		**-Z**	**...+...+...+...**

[1] Operating values at rated power for 60 Hz are stored in the SPC.

[2] Parallel supply lines are required in the case of connection to ≤ 240 V. For frame size 315 with connection to ≤ 240 V, due to the high current, a drilled, removable entry plate (order code **R52**) or a larger terminal box (order code **R50**) can be used. Order codes **R52** and **R50** alter the motor dimensions.

[3] Types derived from IM B3 (IM B6/7/8, IM V6 and IM V5), from IM B5 (IM V3 and IM V1) and from IM B14 (IM V19 and IM V18) are possible, provided that no requirement exists for stamping of the type on the rating plate. The basic type IM B3, IM B5, or IM B14 is stamped as standard on the rating plate. If mounted in a different position, the position must be specified to ensure that the condensation drainage holes are positioned correctly.

© Innomotics 2024

Selection and ordering data

P_{rated}, 50 Hz/ P50 kW	P_{rated}, 60 Hz/ P60 [1] kW	Frame size FS	Operating values at rated power n_{rated}, 50 Hz rpm	T_{rated}, 50 Hz Nm	Different IE class 60 Hz/P60	η_{rated}, 50 Hz, 4/4 %	η_{rated}, 50 Hz, 3/4 %	η_{rated}, 50 Hz, 2/4 %	$\cos\varphi_{rated}$, 50 Hz, 4/4	I_{rated}, 50 Hz, 400 V A	T_{LR}/T_{rated}, 50 Hz	I_{LR}/I_{rated}, 50 Hz	T_B/T_{rated}, 50 Hz	L_{pfA}, 50 Hz dB(A)	L_{WA}, 50 Hz dB(A)	Cast-iron series 1LE1601 – *Performance Line* Article No.	$m_{IM\,B3}$ kg	J kgm²
_ Cooling: Self-ventilated (IC411) or with order code F90 forced-air cooled without external fan and fan cover (IC418)																		
_ Efficiency according to IEC 60034-30-1: IE2 High Efficiency, service factor (SF) 1.15																		
_ Insulation: Thermal class 155 (temperature class F), IP55 degree of protection, utilization in accordance with thermal class 130 (temperature class B)																		
6-pole: 1000 rpm at 50 Hz, 1200 rpm at 60 Hz [1]																		
2.2	**2.55**	**100 L**	965	22	IE1	81.8	83.3	82.7	0.76	5.1	1.7	4.9	2.5	59	71	**1LE1601-1AC6** ■-■■■■	41	0.014
3	**3.45**	**112 M**	965	29.5		83.3	84	82.7	0.74	7	2.1	5.4	2.7	62	74	**1LE1601-1BC6** ■-■■■■	44	0.017
7.5	**8.6**	**132 M**	970	74		87.2	88.1	87.1	0.75	16.6	2	5.6	2.6	63	75	**1LE1601-1CC6** ■-■■■■	83	0.046
15	**17.3**	**160 L**	975	147	IE1	89.7	90.4	89.7	0.75	32	2	5.2	2.4	67	79	**1LE1601-1DC6** ■-■■■■	147	0.12
18.5	**22**	**180 L**	975	181		90.4	90.9	90.5	0.77	38.5	2.3	6	2.9	67	80	**1LE1601-1EC6** ■-■■■■	166	0.206
30	**34.5**	**200 L**	975	295		91.7	92.5	92.4	0.77	61	2.6	6.3	2.7	68	75	**1LE1601-2AC6** ■-■■■■	243	0.381
37	**44.5**	**225 M**	978	360	IE1	92.2	93	92.9	0.83	70	2.5	6.3	2.9	64	77	**1LE1601-2BC6** ■-■■■■	325	0.67
45	**54**	**250 M**	985	435	IE1	92.7	93.4	93.4	0.84	83	2.4	6.6	2.7	67	81	**1LE1601-2CC6** ■-■■■■	410	1
75	**90**	**280 M**	986	730		93.7	94.3	94.4	0.85	136	3.2	7	2.9	66	80	**1LE1601-2DC6** ■-■■■■	570	1.8
8-pole: 750 rpm at 50 Hz, 900 rpm at 60 Hz [1]																		
15	**18**	**180 L**	720	199	IE1	88	89.2	89	0.73	33.5	2.2	4.9	2.5	67	75	**1LE1601-1ED6** ■-■■■■	187	0.263
18.5	**22**	**200 L**	720	245	IE1	88.6	89.9	90.2	0.78	38.5	2.6	5.8	3	65	72	**1LE1601-2AD6** ■-■■■■	250	0.416
30	**36**	**225 M**	732	390		90.8	92	92.1	0.76	63	2.8	6.1	3.2	62	76	**1LE1601-2BD6** ■-■■■■	325	0.67
37	**44.5**	**250 M**	730	485		91.6	92.6	92.7	0.83	70	2.3	5.5	2.6	63	77	**1LE1601-2CD6** ■-■■■■	405	1
55	**66**	**280 M**	736	710		92.9	93.4	93	0.8	107	2.5	5.9	2.5	70	81	**1LE1601-2DD6** ■-■■■■	550	1.6

Voltages [2]		Version					Order code
50 Hz 230 VΔ/400 VY	60 Hz [1] 460 VY	**Standard**	**2**	**2**			–
50 Hz 400 VΔ/690 VY	60 Hz [1] 460 VΔ	**Standard**	**3**	**4**			–
50 Hz 500 VY		Without additional charge	**2**	**7**			–
50 Hz 500 VΔ		Without additional charge	**4**	**0**			–
For other voltages [1] and more information, see from page 3/104			**9**	**0**			...
Types of construction		Version					Order code
Without flange	IM B3 [3]	**Standard**		**A**			–
With flange	IM B5 [3]	With additional charge		**F**			–
With flange	IM B14 [3]	With additional charge		**K**			–
For other types of construction and more information, see from page 3/111				■			...
Motor protection		Version					Order code
PTC thermistor with 1 or 3 temperature sensors		**Standard**			**B**		–
For other motor protection and more information, see from page 3/121					■		...
Terminal box position		Version					
Terminal box at top		**Standard**				**4**	
For other terminal box positions and more information, see from page 3/124						■	
Special versions							Order code(s)
For options, see from page 3/132			**1LE1601-....**	■-■■■■		-Z	...+...+...+...

[1] Operating values at rated power for 60 Hz are stored in the SPC.
[2] Parallel supply lines are required in the case of connection to ≤ 240 V. For frame size 315 with connection to ≤ 240 V, due to the high current, a drilled, removable entry plate (order code **R52**) or a larger terminal box (order code **R50**) can be used. Order codes **R52** and **R50** alter the motor dimensions.
[3] Types derived from IM B3 (IM B6/7/8, IM V6 and IM V5), from IM B5 (IM V3 and IM V1) and from IM B14 (IM V19 and IM V18) are possible, provided that no requirement exists for stamping of the type on the rating plate. The basic type IM B3, IM B5, or IM B14 is stamped as standard on the rating plate. If mounted in a different position, the position must be specified to ensure that the condensation drainage holes are positioned correctly.

© Innomotics 2024

Selection and ordering data

P_{rated}, 50 Hz/ P50	P_{rated}, 60 Hz/ P60 [1]	Frame size	Operating values at rated power n_{rated}, 50 Hz	T_{rated}, 50 Hz	η_{rated}, 50 Hz, 4/4	η_{rated}, 50 Hz, 3/4	η_{rated}, 50 Hz, 2/4	$\cos\varphi_{rated}$, 50 Hz, 4/4	I_{rated}, 50 Hz, 400 V	T_{LR}/T_{rated}, 50 Hz	I_{LR}/I_{rated}, 50 Hz	T_B/T_{rated}, 50 Hz	L_{pfA}, 50 Hz	L_{WA}, 50 Hz	Aluminum series 1LE1002 Article No.	$m_{IM\ B3}$	J
kW	kW	FS	rpm	Nm	%	%	%		A				dB(A)	dB(A)		kg	kgm²
_ Cooling: Self-ventilated (IC411) or with order code F90 forced-air cooled without external fan and fan cover (IC418)																	
_ Efficiency according to IEC 60034-30-1: IE1 Standard Efficiency, service factor (SF) 1.1																	
_ Insulation: Thermal class 155 (temperature class F), IP55 degree of protection, utilization in accordance with thermal class 130 (temperature class B)																	
2-pole: 3000 rpm at 50 Hz, 3600 rpm at 60 Hz [1]																	
0.18	**0.21**	**63 M**	2805	0.61	52.8	50.1	44.2	0.79	0.62	1.7	3.4	2.2	55	62	**1LE1002-0BA2** ■-■■■■	4	0.00018
0.25	**0.29**	**63 M**	2835	0.84	58.2	55.5	48.6	0.75	0.83	1.9	3.6	2.6	56	63	**1LE1002-0BA3** ■-■■■■	4	0.00022
0.37	**0.43**	**71 M**	2755	1.28	63.9	64.5	61.1	0.79	1.06	2.2	3.4	2.2	56	67	**1LE1002-0CA2** ■-■■■■	5	0.00022
0.55	**0.63**	**71 M**	2750	1.91	69	69.9	66.5	0.79	1.46	2.2	3.7	2.2	62	73	**1LE1002-0CA3** ■-■■■■	6	0.00029
0.75	**0.86**	**80 M**	2835	2.55	72.1	72.6	69.9	0.86	1.75	2.1	5.2	2.3	64	71	**1LE1002-0DA2** ■-■■■■	9	0.001689
1.1	**1.27**	**80 M**	2840	3.7	75	75.7	73.4	0.86	2.45	2.5	5.7	2.5	64	71	**1LE1002-0DA3** ■-■■■■	12	0.002228
1.5	**1.75**	**90 S**	2835	5.1	77.2	78.2	76.8	0.85	3.3	2.6	5.5	2.9	70	77	**1LE1002-0EA0** ■-■■■■	13	0.003641
2.2	**2.55**	**90 L**	2855	7.4	79.7	80.9	81.3	0.85	4.7	2.8	6.5	3.2	71	78	**1LE1002-0EA4** ■-■■■■	14	0.004612
3	**3.45**	**100 L**	2835	10.1	81.5	83.2	82.7	0.87	6.1	3.2	6.4	3.5	66	80	**1LE1002-1AA4** ■-■■■■	20	0.0034
4	**4.55**	**112 M**	2935	13	83.1	82.9	80.5	0.85	8.2	3.3	8.3	4.2	70	83	**1LE1002-1BA2** ■-■■■■	25	0.0067
5.5	**6.3**	**132 S**	2910	18	84.7	85.8	85.3	0.88	10.7	1.8	5.7	2.6	68	82	**1LE1002-1CA0** ■-■■■■	35	0.013
7.5	**8.6**	**132 S**	2925	24.5	86	86.6	86.1	0.88	14.3	2.2	6.8	3.1	68	82	**1LE1002-1CA1** ■-■■■■	40	0.016
11	**12.6**	**160 M**	2925	36	87.6	88.2	87	0.86	21	2	5.7	2.7	79	86	**1LE1002-1DA2** ■-■■■■	60	0.03
15	**17.3**	**160 M**	2935	49	88.7	88.9	87.2	0.85	28.5	2.4	6.8	3.2	78	85	**1LE1002-1DA3** ■-■■■■	68	0.036
18.5	**21.3**	**160 L**	2935	60	89.3	89.7	88.5	0.87	34.5	2.7	7.6	3.4	78	85	**1LE1002-1DA4** ■-■■■■	78	0.044
22	**24.5**	**180 M**	2945	71	89.9	90.6	90.4	0.87	40.5	2.5	7.7	3.5	72	85	**1LE1002-1EA2** ■-■■■■	112	0.069
30	**33.5**	**200 L**	2960	97	90.7	90.9	90.2	0.79	60	2.5	7.3	3.6	72	85	**1LE1002-2AA4** ■-■■■■	149	0.124
37	**41.5**	**200 L**	2955	120	91.2	91.6	91.2	0.88	67	2.7	8.2	3.5	72	85	**1LE1002-2AA5** ■-■■■■	169	0.15

Voltages		Version					Order code
50 Hz 230 VΔ/400 VY	60 Hz [1] 460 VY	**Standard**	**2**	**2**			–
50 Hz 400 VΔ/690 VY	60 Hz [1] 460 VΔ	**Standard**	**3**	**4**			–
50 Hz 500 VY		Without additional charge	**2**	**7**			–
50 Hz 500 VΔ		Without additional charge	**4**	**0**			–
For other voltages [1] and more information, see from page 3/101			**9**	**0**			**...**
Types of construction		Version					Order code
Without flange	IM B3 [2]	**Standard**			**A**		–
With flange	IM B5 [2]	With additional charge			**F**		–
With flange	IM B14 [2]	With additional charge			**K**		–
For other types of construction and more information, see from page 3/107					■		**...**
Motor protection		Version					Order code
Without		**Standard**				**A**	–
PTC thermistor with 1 or 3 temperature sensors (frame sizes 63 to 90 or 100 to 200)		With additional charge				**B**	–
For other motor protection and more information, see from page 3/120						■	**...**
Terminal box position		Version					
Terminal box at top		**Standard**				**4**	
For other terminal box positions and more information, see from page 3/123						■	

Special versions			Order code(s)
Forced-air cooled motors w/o ext. fan/fan cover (IC418)	**1LE1002- ....**	■-■■■■ -Z	**F90 +...+...+...**
For options, see from page 3/126	**1LE1002- ....**	■-■■■■ -Z	**...+...+...+...**

[1] Operating values at rated power for 60 Hz are stored in the SPC.

[2] Types derived from IM B3 (IM B6/7/8, IM V6, and IM V5), from IM B5 (IM V3 and IM V1) and from IM B14 (IM V19 and IM V18) are possible, provided that no requirements exist for condensation drainage holes (**H03**) or stamping of the type on the rating plate. The basic type IM B3, IM B5, or IM B14 is stamped as standard on the rating plate. For orders with condensation drainage holes (**H03**), the type must be specified.

© Innomotics 2024

Selection and ordering data

P_{rated}, 50 Hz/ P50 kW	P_{rated}, 60 Hz/ P60 [1] kW	Frame size FS	Operating values at rated power: n_{rated}, 50 Hz rpm	T_{rated}, 50 Hz Nm	η_{rated}, 50 Hz, 4/4 %	η_{rated}, 50 Hz, 3/4 %	η_{rated}, 50 Hz, 2/4 %	$\cos\varphi_{rated}$, 50 Hz, 4/4	I_{rated}, 50 Hz, 400 V A	T_{LR}/T_{rated}, 50 Hz	I_{LR}/I_{rated}, 50 Hz	T_B/T_{rated}, 50 Hz	L_{pfA}, 50 Hz dB(A)	L_{WA}, 50 Hz dB(A)	Aluminum series 1LE1002 Article No.	$m_{IM\ B3}$ kg	J kgm²
_ Cooling: Self-ventilated (IC411) or with order code F90 forced-air cooled without external fan and fan cover (IC418)																	
_ Efficiency according to IEC 60034-30-1: IE1 Standard Efficiency, service factor (SF) 1.1																	
_ Insulation: Thermal class 155 (temperature class F), IP55 degree of protection, utilization in accordance with thermal class 130 (temperature class B)																	
4-pole: 1500 rpm at 50 Hz, 1800 rpm at 60 Hz [1]																	
0.12	**0.14**	**63 M**	1360	0.84	50	47.3	39.1	0.71	0.49	1.6	2.5	1.8	48	55	**1LE1002-0BB2** ■-■■■■	4	0.00029
0.18	**0.21**	**63 M**	1360	1.26	57	55.1	47.8	0.71	0.64	1.9	2.8	2.1	55	62	**1LE1002-0BB3** ■-■■■■	4	0.00037
0.25	**0.29**	**71 M**	1365	1.75	61.5	61.4	56.1	0.73	0.8	1.8	3	2	49	60	**1LE1002-0CB2** ■-■■■■	5	0.00052
0.37	**0.43**	**71 M**	1350	2.6	66	67.7	65	0.75	1.08	2	3.2	2	54	65	**1LE1002-0CB3** ■-■■■■	6	0.00077
0.55	**0.63**	**80 M**	1385	3.8	70	70.7	67.7	0.79	1.44	2.1	3.7	2.2	56	63	**1LE1002-0DB2** ■-■■■■	9	0.002842
0.75	**0.86**	**80 M**	1385	5.2	72.1	72	67	0.76	1.98	2.1	3.6	2.3	59	66	**1LE1002-0DB3** ■-■■■■	11	0.003767
1.1	**1.27**	**90 S**	1405	7.5	75	75.9	73.6	0.81	2.6	2.1	4.5	2.3	60	67	**1LE1002-0EB0** ■-■■■■	12	0.005004
1.5	**1.75**	**90 L**	1410	10.2	77.2	77.8	75.1	0.8	3.5	2.4	4.7	2.6	61	68	**1LE1002-0EB4** ■-■■■■	15	0.005957
2.2	**2.55**	**100 L**	1425	14.7	79.7	80.3	78.1	0.81	4.9	2.3	5.1	2.7	60	72	**1LE1002-1AB4** ■-■■■■	18	0.0059
3	**3.45**	**100 L**	1425	20	81.5	82.6	81.5	0.85	6.3	2.4	5.4	2.6	60	72	**1LE1002-1AB5** ■-■■■■	22	0.0078
4	**4.55**	**112 M**	1435	26.5	83.1	84.3	84	0.83	8.4	2.5	6.1	2.9	57	70	**1LE1002-1BB2** ■-■■■■	27	0.01
5.5	**6.3**	**132 S**	1450	36	84.7	85.3	84.2	0.82	11.4	2.3	5.7	2.7	64	76	**1LE1002-1CB0** ■-■■■■	38	0.019
7.5	**8.6**	**132 M**	1450	49.5	86	86.5	85.4	0.82	15.4	2.6	6.6	3.1	64	76	**1LE1002-1CB2** ■-■■■■	44	0.024
11	**12.6**	**160 M**	1460	72	87.6	87.9	86.7	0.81	22.5	2.7	6.9	3.3	70	82	**1LE1002-1DB2** ■-■■■■	62	0.044
15	**17.3**	**160 L**	1460	98	88.7	89	87.8	0.82	30	3	7.5	3.6	70	82	**1LE1002-1DB4** ■-■■■■	73	0.056
18.5	**21.3**	**180 M**	1468	120	89.3	90.2	90.2	0.85	35	2.2	7.3	3.1	63	76	**1LE1002-1EB2** ■-■■■■	131	0.13
22	**25.3**	**180 L**	1465	143	89.9	90.8	90.7	0.83	42.5	2.7	8	3.6	63	76	**1LE1002-1EB4** ■-■■■■	132	0.13
30	**34.5**	**200 L**	1472	195	90.7	91.5	91.4	0.83	58	2.3	6.9	3.1	64	78	**1LE1002-2AB5** ■-■■■■	169	0.2

Voltages		Version					Order code
50 Hz 230 VΔ/400 VY	60 Hz [1] 460 VY	**Standard**	**2**	**2**			–
50 Hz 400 VΔ/690 VY	60 Hz [1] 460 VΔ	**Standard**	**3**	**4**			–
50 Hz 500 VY		Without additional charge	**2**	**7**			–
50 Hz 500 VΔ		Without additional charge	**4**	**0**			–
For other voltages [1] and more information, see from page 3/101			**9**	**0**			**...**
Types of construction		Version					Order code
Without flange	IM B3 [2]	**Standard**			**A**		–
With flange	IM B5 [2]	With additional charge			**F**		–
With flange	IM B14 [2]	With additional charge			**K**		–
For other types of construction and more information, see from page 3/107					■		**...**
Motor protection		Version					Order code
Without		**Standard**				**A**	–
PTC thermistor with 1 or 3 temperature sensors (frame sizes 63 to 90 or 100 to 200)		With additional charge				**B**	–
For other motor protection and more information, see from page 3/120						■	**...**
Terminal box position		Version					
Terminal box at top		**Standard**					**4**
For other terminal box positions and more information, see from page 3/123							■

Special versions		Order code(s)
Forced-air cooled motors w/o ext. fan/fan cover (IC418)	**1LE1002-....** ■-■■■■ -Z	**F90 +...+...+...**
For options, see from page 3/126	**1LE1002-....** ■-■■■■ -Z	**...+...+...+...**

[1] Operating values at rated power for 60 Hz are stored in the SPC.

[2] Types derived from IM B3 (IM B6/7/8, IM V6, and IM V5), from IM B5 (IM V3 and IM V1) and from IM B14 (IM V19 and IM V18) are possible, provided that no requirements exist for condensation drainage holes (**H03**) or stamping of the type on the rating plate. The basic type IM B3, IM B5, or IM B14 is stamped as standard on the rating plate. For orders with condensation drainage holes (**H03**), the type must be specified.

© Innomotics 2024

Selection and ordering data

P_{rated}, 50 Hz/ P50	P_{rated}, 60 Hz/ P60 [1]	Frame size	Operating values at rated power η_{rated}, 50 Hz	T_{rated}, 50 Hz	η_{rated}, 50 Hz, 4/4	η_{rated}, 50 Hz, 3/4	η_{rated}, 50 Hz, 2/4	$\cos\varphi_{rated}$, 50 Hz, 4/4	I_{rated}, 50 Hz, 400 V	T_{LR}/T_{rated}, 50 Hz	I_{LR}/I_{rated}, 50 Hz	T_B/T_{rated}, 50 Hz	L_{pfA}, 50 Hz	L_{WA}, 50 Hz	Aluminum series 1LE1002 Article No.		$m_{IM\ B3}$	J
kW	kW	FS	rpm	Nm	%	%	%		A				dB(A)	dB(A)			kg	kgm²
_ Cooling: Self-ventilated (IC411) or with order code F90 forced-air cooled without external fan and fan cover (IC418)																		
_ Efficiency according to IEC 60034-30-1: IE1 Standard Efficiency, service factor (SF) 1.1																		
_ Insulation: Thermal class 155 (temperature class F), IP55 degree of protection, utilization in accordance with thermal class 130 (temperature class B)																		
6-pole: 1000 rpm at 50 Hz, 1200 rpm at 60 Hz [1]																		
0.09	**0.11**	**63 M**	895	0.96	42.7	38.5	30.4	0.63	0.48	1.8	2	1.9	56	62	**1LE1002-0BC2**	■-■■■■	4	0.00037
0.18	**0.21**	**71 M**	875	1.96	45.5	44.4	38.3	0.67	0.85	1.9	2	2	47	58	**1LE1002-0CC2**	■-■■■■	5	0.00055
0.25	**0.29**	**71 M**	860	2.8	52.1	52.8	48.4	0.71	0.98	2	2.2	2	51	62	**1LE1002-0CC3**	■-■■■■	6	0.0008
0.37	**0.43**	**80 M**	915	3.85	59.7	58.6	52.7	0.7	1.28	1.6	2.7	1.8	56	64	**1LE1002-0DC2**	■-■■■■	9	0.001976
0.55	**0.63**	**80 M**	900	5.8	65.8	66.6	62.6	0.72	1.68	1.7	2.7	1.9	54	61	**1LE1002-0DC3**	■-■■■■	12	0.002378
0.75	**0.86**	**90 S**	940	7.6	70	70	66	0.67	2.3	2	3.8	2.2	59	70	**1LE1002-0EC0**	■-■■■■	13	0.003329
1.1	**1.27**	**90 L**	925	11.4	72.9	73.8	71.2	0.69	3.15	2.2	3.8	2.4	58	69	**1LE1002-0EC4**	■-■■■■	15	0.004023
1.5	**1.75**	**100 L**	940	15.2	75.2	75.6	72.3	0.74	3.9	2	4	2.2	59	71	**1LE1002-1AC4**	■-■■■■	19	0.0065
2.2	**2.55**	**112 M**	940	22.5	77.7	78.4	76.6	0.72	5.7	2.6	4.6	2.7	59	71	**1LE1002-1BC2**	■-■■■■	25	0.0092
3	**3.45**	**132 S**	955	30	79.7	79.9	77.1	0.74	7.3	2	4.6	2.6	63	75	**1LE1002-1CC0**	■-■■■■	34	0.017
4	**4.55**	**132 M**	955	40	81.4	82.5	81.9	0.76	9.3	2.3	5.2	2.6	65	78	**1LE1002-1CC2**	■-■■■■	39	0.021
5.5	**6.3**	**132 M**	955	55	83.1	84	82.8	0.75	12.7	2.7	5.7	3	70	77	**1LE1002-1CC3**	■-■■■■	48	0.027
7.5	**8.6**	**160 M**	970	74	84.7	84.8	83.2	0.73	17.5	2.1	5.5	2.9	67	79	**1LE1002-1DC2**	■-■■■■	72	0.056
11	**12.6**	**160 L**	965	109	86.4	86.8	85.9	0.77	24	1.9	5.9	2.7	67	79	**1LE1002-1DC4**	■-■■■■	92	0.078
15	**18**	**180 L**	975	147	87.7	88.5	87.9	0.77	32	2.3	6.1	3	56	69	**1LE1002-1EC4**	■-■■■■	119	0.17
18.5	**22**	**200 L**	978	181	88.6	89.8	89.8	0.79	38	2.5	6.3	2.6	59	72	**1LE1002-2AC4**	■-■■■■	149	0.25
22	**26.5**	**200 L**	980	215	89.2	90	89.6	0.79	45	2.8	6.8	2.9	59	72	**1LE1002-2AC5**	■-■■■■	166	0.3
8-pole: 750 rpm at 50 Hz, 900 rpm at 60 Hz [1]																		
0.09	**0.11**	**71 M**	635	1.35	39	35.7	28.6	0.63	0.53	1.8	1.8	2	49	56	**1LE1002-0CD2**	■-■■■■	6	0.00055
0.12	**0.14**	**71 M**	625	1.83	31	30.5	27.1	0.68	0.82	1.7	2	1.7	49	56	**1LE1002-0CD3**	■-■■■■	6	0.0008
0.75	**0.86**	**100 L**	705	10.2	61.2	58.1	50.5	0.62	2.85	1.9	3	2.2	60	72	**1LE1002-1AD4**	■-■■■■	17	0.0056
1.1	**1.27**	**100 L**	690	15.2	66.5	65.9	61.5	0.61	3.9	2	3.2	2.3	64	72	**1LE1002-1AD5**	■-■■■■	22	0.0078
1.5	**1.75**	**112 M**	700	20.5	70.2	71.2	69.4	0.66	4.65	1.9	3.5	2.1	67	78	**1LE1002-1BD2**	■-■■■■	29	0.0094
2.2	**2.55**	**132 S**	715	29.5	74.2	74.1	71.4	0.66	6.5	1.7	3.9	2.4	63	75	**1LE1002-1CD0**	■-■■■■	37	0.019
3	**3.45**	**132 M**	715	40	77	77.4	75.2	0.68	8.3	1.8	3.9	2.2	63	75	**1LE1002-1CD2**	■-■■■■	44	0.024
4	**4.55**	**160 M**	720	53	79.2	79.2	76.3	0.67	10.9	1.6	4.1	2.3	63	75	**1LE1002-1DD2**	■-■■■■	60	0.044
5.5	**6.3**	**160 M**	720	73	81.4	81.9	80.3	0.68	14.3	1.6	4	2.2	63	75	**1LE1002-1DD3**	■-■■■■	72	0.056
7.5	**8.6**	**160 L**	715	100	83.1	83.7	82.4	0.69	18.9	1.7	3.8	2.2	63	75	**1LE1002-1DD4**	■-■■■■	91	0.077
11	**13.2**	**180 L**	720	146	85	86.2	86	0.7	26.5	1.9	5	2.5	65	78	**1LE1002-1ED4**	■-■■■■	122	0.2
15	**18**	**200 L**	718	199	86.2	87.9	88.4	0.75	33.5	2.5	5.5	2.9	55	69	**1LE1002-2AD5**	■-■■■■	170	0.3

Voltages		Version				Order code
50 Hz 230 VΔ/400 VY	60 Hz [1] 460 VY	**Standard**	**2**	**2**		–
50 Hz 400 VΔ/690 VY	60 Hz [1] 460 VΔ	**Standard**	**3**	**4**		–
50 Hz 500 VY		Without additional charge	**2**	**7**		–
50 Hz 500 VΔ		Without additional charge	**4**	**0**		–
For other voltages [1] and more information, see from page 3/101			**9**	**0**		**...**
Types of construction		Version				Order code
Without flange	IM B3 [2]	**Standard**		**A**		–
With flange	IM B5 [2]	With additional charge		**F**		–
With flange	IM B14 [2]	With additional charge		**K**		–
For other types of construction and more information, see from page 3/107				■		**...**
Motor protection		Version				Order code
Without		**Standard**			**A**	–
PTC thermistor with 1 or 3 temperature sensors (frame sizes 63 to 90 or 100 to 200)		With additional charge			**B**	–
For other motor protection and more information, see from page 3/120					■	**...**
Terminal box position		Version				
Terminal box at top		**Standard**			**4**	
For other terminal box positions and more information, see from page 3/123					■	

Special versions			Order code(s)
Forced-air cooled motors w/o ext. fan/fan cover (IC418)	**1LE1002-....**	■-■■■■ **-Z**	**F90 +...+...+...**
For options, see from page 3/126	**1LE1002-....**	■-■■■■ **-Z**	**...+...+...+...**

[1] Operating values at rated power for 60 Hz are stored in the SPC.

[2] Types derived from IM B3 (IM B6/7/8, IM V6, and IM V5), from IM B5 (IM V3 and IM V1) and from IM B14 (IM V19 and IM V18) are possible, provided that no requirements exist for condensation drainage holes (**H03**) or stamping of the type on the rating plate. The basic type IM B3, IM B5, or IM B14 is stamped as standard on the rating plate. For orders with condensation drainage holes (**H03**), the type must be specified.

© Innomotics 2024

Selection and ordering data

P_{rated}, 50 Hz/ P50 kW	P_{rated}, 60 Hz/ P60 [1] kW	Frame size FS	Operating values at rated power n_{rated}, 50 Hz rpm	T_{rated}, 50 Hz Nm	η_{rated}, 50 Hz, 4/4 %	η_{rated}, 50 Hz, 3/4 %	η_{rated}, 50 Hz, 2/4 %	$\cos\varphi_{rated}$, 50 Hz, 4/4	I_{rated}, 50 Hz, 400 V A	T_{LR}/T_{rated}, 50 Hz	I_{LR}/I_{rated}, 50 Hz	T_B/T_{rated}, 50 Hz	L_{pfA}, 50 Hz dB(A)	L_{WA}, 50 Hz dB(A)	Aluminum series 1LE1002 Article No.	$m_{IM\ B3}$ kg	J kgm²
_ Cooling: Self-ventilated (IC411) or with order code F90 forced-air cooled without external fan and fan cover (IC418)																	
_ Efficiency according to IEC 60034-30-1: IE1 Standard Efficiency, (SF) 1.1																	
_ Insulation: Thermal class 155 (temperature class F), IP55 degree of protection, utilization in accordance with thermal class 130 (temperature class B)																	
2-pole: 3000 rpm at 50 Hz, 3600 rpm at 60 Hz [1]																	
0.37	**0.43**	**63 M**	2795	1.26	63.9	60.3	51.9	0.71	1.18	2.4	3.5	2.6	58	65	**1LE1002-0BA6** ■-■■■■	5	0.00022
0.75	**0.86**	**71 M**	2780	2.6	72.1	72.5	70.2	0.83	1.81	2.2	4.5	2.2	65	72	**1LE1002-0CA6** ■-■■■■	5	0.00051
4	**4.55**	**100 L**	2850	13.4	83.1	83.9	83	0.85	8.2	4.5	7	4.1	67	79	**1LE1002-1AA6** ■-■■■■	25	0.0044
5.5	**6.3**	**112 L**	2935	17.9	84.7	84.7	82.7	0.86	10.9	2.9	7.5	3.8	69	81	**1LE1002-1BA6** ■-■■■■	31	0.0085
11	**12.6**	**132 M**	2920	36	87.6	88.3	87.8	0.9	20	2.8	7.5	3.7	68	80	**1LE1002-1CA6** ■-■■■■	53	0.022
22	**24.5**	**160 L**	2935	72	89.9	90.2	89.5	0.9	39	2.6	7.5	3.4	70	82	**1LE1002-1DA6** ■-■■■■	85	0.049
4-pole: 1500 rpm at 50 Hz, 1800 rpm at 60 Hz [1]																	
0.25	**0.29**	**63 M**	1365	1.75	61.5	59.6	53.5	0.68	0.86	2.3	2.9	2.3	52	59	**1LE1002-0BB6** ■-■■■■	5	0.00045
0.55	**0.63**	**71 M**	1365	3.85	70	70.5	67.4	0.7	1.62	2.5	3.6	2.5	59	66	**1LE1002-0CB6** ■-■■■■	7	0.00095
4	**4.55**	**100 L**	1435	26.5	83.1	83.8	82.3	0.81	8.6	2.9	5.8	3.1	60	72	**1LE1002-1AB6** ■-■■■■	27	0.01
5.5	**6.3**	**112 M**	1420	37	84.7	85.9	85.3	0.81	11.6	3	5.8	3.1	58	70	**1LE1002-1BB6** ■-■■■■	33	0.012
11	**12.6**	**132 M**	1450	72	87.6	88.2	87.6	0.84	21.5	2.5	7.2	3	64	76	**1LE1002-1CB6** ■-■■■■	58	0.033
18.5	**21.3**	**160M**	1460	121	89.3	89.8	89.2	0.85	35	2.7	7.2	3.2	65	77	**1LE1002-1DB6** ■-■■■■	85	0.068
6-pole: 1000 rpm at 50 Hz, 1200 rpm at 60 Hz [1]																	
2.2	**2.55**	**100 L**	930	22.5	77.7	79.5	78.1	0.78	5.2	2	4	2.2	59	71	**1LE1002-1AC6** ■-■■■■	24	0.0084
3	**3.45**	**112 M**	945	30.5	79.7	79.5	76.3	0.72	7.5	2.9	4.6	3	57	69	**1LE1002-1BC6** ■-■■■■	32	0.013
7.5	**8.6**	**132 M**	950	75	84.7	85.3	84.1	0.74	17.3	2.4	5.3	3	63	75	**1LE1002-1CC6** ■-■■■■	54	0.032
15	**17.3**	**160 M**	965	148	87.7	87.9	86.5	0.75	33	2.9	6	3.4	67	79	**1LE1002-1DC6** ■-■■■■	109	0.094

Voltages		Version				Order code
50 Hz 230 VΔ/400 VY	60 Hz [1] 460 VY	**Standard**	**2**	**2**		–
50 Hz 400 VΔ/690 VY	60 Hz [1] 460 VΔ	**Standard**	**3**	**4**		–
50 Hz 500 VY		Without additional charge	**2**	**7**		–
50 Hz 500 VΔ		Without additional charge	**4**	**0**		–
For other voltages [1] and more information, see from page 3/101			**9**	**0**		...
Types of construction		Version				Order code
Without flange	IM B3 [2]	**Standard**		**A**		–
With flange	IM B5 [2]	With additional charge		**F**		–
With flange	IM B14 [2]	With additional charge		**K**		–
For other types of construction and more information, see from page 3/107				■		...
Motor protection		Version				Order code
Without		**Standard**			**A**	–
PTC thermistor with 1 or 3 temperature sensors (frame sizes 63 to 90 or 100 to 200)		With additional charge			**B**	–
For other motor protection and more information, see from page 3/120					■	...
Terminal box position		Version				
Terminal box at top		**Standard**			**4**	
For other terminal box positions and more information, see from page 3/123					■	
Special versions						Order code(s)
For options, see from page 3/126			**1LE1002-....**	■-■■■■	-Z	...+...+...+...

[1] Operating values at rated power for 60 Hz are stored in the SPC.

[2] Types derived from IM B3 (IM B6/7/8, IM V6, and IM V5), from IM B5 (IM V3 and IM V1) and from IM B14 (IM V19 and IM V18) are possible, provided that no requirements exist for condensation drainage holes (**H03**) or stamping of the type on the rating plate. The basic type IM B3, IM B5, or IM B14 is stamped as standard on the rating plate. For orders with condensation drainage holes (**H03**), the type must be specified.

© Innomotics 2024

Selection and ordering data

P_{rated}, 50 Hz/ P50	P_{rated}, 60 Hz/ P60 [1]	Frame size	Operating values at rated power n_{rated}, 50 Hz	T_{rated}, 50 Hz	η_{rated}, 50 Hz, 4/4	η_{rated}, 50 Hz, 3/4	η_{rated}, 50 Hz, 2/4	$\cos\varphi_{rated}$, 50 Hz, 4/4	I_{rated}, 50 Hz, 400 V	T_{LR}/T_{rated}, 50 Hz	I_{LR}/I_{rated}, 50 Hz	T_B/T_{rated}, 50 Hz	L_{pfA}, 50 Hz	L_{WA}, 50 Hz	Cast-iron series 1LE1502 – *Basic Line* Article No.				$m_{IM\ B3}$	J
kW	kW	FS	rpm	Nm	%	%	%		A				dB(A)	dB(A)					kg	kgm²
_ Cooling: Self-ventilated (IC411) or with order code F90 forced-air cooled without external fan and fan cover (IC418)																				
_ Efficiency according to IEC 60034-30-1: IE1 Standard Efficiency, service factor (SF) 1.1																				
_ Insulation: Thermal class 155 (temperature class F), IP55 degree of protection, utilization in accordance with thermal class 130 (temperature class B)																				
2-pole: 3000 rpm at 50 Hz, 3600 rpm at 60 Hz [1]																				
3	**3.45**	**100 L**	2835	10.1	81.5	83.2	82.7	0.87	6.1	3.2	6.4	3.5	66	80	**1LE1502-1AA4**	■	-■■■■	■	31	0.0034
4	**4.55**	**112 M**	2935	13	83.1	82.9	80.5	0.85	8.2	3.3	8.3	4.2	70	83	**1LE1502-1BA2**	■	-■■■■	■	36	0.0067
5.5	**6.3**	**132 S**	2910	18	84.7	85.8	85.3	0.88	10.7	1.8	5.7	2.6	68	82	**1LE1502-1CA0**	■	-■■■■	■	53	0.013
7.5	**8.6**	**132 S**	2925	24.5	86	86.6	86.1	0.88	14.3	2.2	6.8	3.1	68	82	**1LE1502-1CA1**	■	-■■■■	■	58	0.016
11	**12.6**	**160 M**	2925	36	87.6	88.2	87	0.86	21	2	5.7	2.7	79	86	**1LE1502-1DA2**	■	-■■■■	■	87	0.03
15	**18**	**160 M**	2935	49	88.7	88.9	87.2	0.85	28.5	2.4	6.8	3.2	78	85	**1LE1502-1DA3**	■	-■■■■	■	95	0.036
18.5	**22**	**160 L**	2935	60	89.3	89.7	88.5	0.87	34.5	2.7	7.6	3.4	78	85	**1LE1502-1DA4**	■	-■■■■	■	105	0.044
22	**24.5**	**180 M**	2945	71	89.9	90.6	90.4	0.87	40.5	2.5	7.7	3.5	72	85	**1LE1502-1EA2**	■	-■■■■	■	145	0.069
30	**33.5**	**200 L**	2960	97	90.7	90.9	90.2	0.79	60	2.5	7.3	3.6	72	85	**1LE1502-2AA4**	■	-■■■■	■	191	0.124
37	**41.5**	**200 L**	2955	120	91.2	91.6	91.2	0.88	67	2.7	8.2	3.5	72	85	**1LE1502-2AA5**	■	-■■■■	■	223	0.15
45	**51**	**225 M**	2960	145	91.7	92	91.6	0.88	80	2.3	6.7	3	73	86	**1LE1502-2BA2**	■	-■■■■	■	280	0.22
55	**62**	**250 M**	2970	177	92.1	92.1	91.2	0.88	98	2.1	6.7	3	76	90	**1LE1502-2CA2**	■	-■■■■	■	360	0.4
75	**84**	**280 S**	2975	240	92.7	92.5	91.3	0.86	136	2.2	6.8	3	78	92	**1LE1502-2DA0**	■	-■■■■	■	470	0.72
90	**101**	**280 M**	2975	290	93	93.1	92.4	0.88	159	2.5	7.1	3.1	76	89	**1LE1502-2DA2**	■	-■■■■	■	530	0.83
110	**123**	**315 S**	2982	350	93.3	92.9	91.5	0.86	198	2.3	7.5	3.3	80	94	**1LE1502-3AA0**	■	-■■■■	■	680	1.2
132	**148**	**315 M**	2982	425	93.5	93.2	92.5	0.89	230	2.3	7.6	3	80	94	**1LE1502-3AA2**	■	-■■■■	■	740	1.4
160	**180**	**315 L**	2982	510	93.8	93.6	93.1	0.91	270	2.3	7.4	2.9	80	94	**1LE1502-3AA4**	■	-■■■■	■	880	1.6
200	**224**	**315 L**	2982	640	94	93.9	93.5	0.92	335	2.2	7.1	2.8	80	94	**1LE1502-3AA5**	■	-■■■■	■	1000	2.1

Voltages [2]		Version					Order code
50 Hz 230 VΔ/400 VY	60 Hz [1] 460 VY	**Standard**	**2**	**2**			–
50 Hz 400 VΔ/690 VY	60 Hz [1] 460 VΔ	**Standard**	**3**	**4**			–
50 Hz 500 VY		Without additional charge	**2**	**7**			–
50 Hz 500 VΔ		Without additional charge	**4**	**0**			–
For other voltages [1] and more information, see from page 3/104			**9**	**0**			**...**
Types of construction		Version					Order code
Without flange	IM B3 [3]	**Standard**			**A**		–
With flange	IM B5 [3]	With additional charge			**F**		–
With flange	IM B14 [3]	With additional charge			**K**		–
For other types of construction and more information, see from page 3/111					■		**...**
Motor protection		Version					Order code
Without		**Standard**				**A**	–
PTC thermistor with 3 temperature sensors		With additional charge				**B**	–
For other motor protection and more information, see from page 3/121						■	**...**
Terminal box position		Version					
Terminal box at top		**Standard**					**4**
For other terminal box positions and more information, see from page 3/124							■

Special versions				Order code(s)
Forced-air cooled motors w/o ext. fan/fan cover (IC418)	**1LE1502-....**	■-■■■■	**-Z**	**F90+...+...+...**
For options, see from page 3/132	**1LE1502-....**	■-■■■■	**-Z**	**...+...+...+...**

[1] Operating values at rated power for 60 Hz are stored in the SPC.

[2] Parallel supply lines are required in the case of connection to ≤ 240 V. For frame size 315 with connection to ≤ 240 V, due to the high current, a drilled, removable entry plate (order code **R52**) or a larger terminal box (order code **R50**) can be used. Order codes **R52** and **R50** alter the motor dimensions.

[3] Types derived from IM B3 (IM B6/7/8, IM V6 and IM V5), from IM B5 (IM V3 and IM V1) and from IM B14 (IM V19 and IM V18) are possible, provided that no requirement exists for stamping of the type on the rating plate. The basic type IM B3, IM B5, or IM B14 is stamped as standard on the rating plate. If mounted in a different position, the position must be specified to ensure that the condensation drainage holes are positioned correctly.

© Innomotics 2024

Selection and ordering data

P_{rated}, 50 Hz/ P50	P_{rated}, 60 Hz/ P60 [1]	Frame size	Operating values at rated power n_{rated}, 50 Hz	T_{rated}, 50 Hz	η_{rated}, 50 Hz, 4/4	η_{rated}, 50 Hz, 3/4	η_{rated}, 50 Hz, 2/4	$\cos\varphi_{rated}$, 50 Hz, 4/4	I_{rated}, 50 Hz, 400 V	T_{LR}/T_{rated}, 50 Hz	I_{LR}/I_{rated}, 50 Hz	T_B/T_{rated}, 50 Hz	L_{pfA}, 50 Hz	L_{WA}, 50 Hz	Cast-iron series 1LE1502 – *Basic Line* Article No.				$m_{IM\ B3}$	J
kW	kW	FS	rpm	Nm	%	%	%		A				dB(A)	dB(A)					kg	kgm^2
_ Cooling: Self-ventilated (IC411) or with order code F90 forced-air cooled without external fan and fan cover (IC418)																				
_ Efficiency according to IEC 60034-30-1: IE1 Standard Efficiency, service factor (SF) 1.1																				
_ Insulation: Thermal class 155 (temperature class F), IP55 degree of protection, utilization in accordance with thermal class 130 (temperature class B)																				
4-pole: 1500 rpm at 50 Hz, 1800 rpm at 60 Hz [1]																				
2.2	**2.55**	**100 L**	1425	14.7	79.7	80.3	78.1	0.81	4.9	2.3	5.1	2.7	60	72	**1LE1502-1AB4**	■	-■■■■	■	29	0.0059
3	**3.45**	**100 L**	1425	20	81.5	82.6	81.5	0.85	6.3	2.4	5.4	2.6	60	72	**1LE1502-1AB5**	■	-■■■■	■	33	0.0078
4	**4.55**	**112 M**	1435	26.5	83.1	84.3	84	0.83	8.4	2.5	6.1	2.9	57	70	**1LE1502-1BB2**	■	-■■■■	■	38	0.01
5.5	**56.3**	**132 S**	1450	36	84.7	85.3	84.2	0.82	11.4	2.3	5.7	2.7	64	76	**1LE1502-1CB0**	■	-■■■■	■	–	0.019
7.5	**8.6**	**132 M**	1450	49.5	86	86.5	85.4	0.82	15.4	2.6	6.6	3.1	64	76	**1LE1502-1CB2**	■	-■■■■	■	62	0.024
11	**12.6**	**160 M**	1460	72	87.6	87.9	86.7	0.81	22.5	2.7	6.9	3.3	70	82	**1LE1502-1DB2**	■	-■■■■	■	89	0.044
15	**17.3**	**160 L**	1460	98	88.7	89	87.8	0.82	30	3	7.5	3.6	70	82	**1LE1502-1DB4**	■	-■■■■	■	100	0.056
18.5	**21.3**	**180 M**	1468	120	89.3	90.2	90.2	0.85	35	2.2	7.3	3.1	63	76	**1LE1502-1EB2**	■	-■■■■	■	168	0.13
22	**25.3**	**180 L**	1465	143	89.9	90.8	90.7	0.83	42.5	2.7	8	3.6	63	76	**1LE1502-1EB4**	■	-■■■■	■	168	0.13
30	**34.5**	**200 L**	1472	195	90.7	91.5	91.4	0.83	58	2.3	6.9	3.1	64	78	**1LE1502-2AB5**	■	-■■■■	■	220	0.2
37	**42.5**	**225 S**	1475	240	91.2	91.6	91.1	0.85	69	2.3	7	3.2	69	83	**1LE1502-2BB0**	■	-■■■■	■	260	0.37
45	**52**	**225 M**	1475	290	91.7	92.1	91.7	0.86	82	2.6	7.2	3.2	69	82	**1LE1502-2BB2**	■	-■■■■	■	290	0.45
55	**63**	**250 M**	1475	355	92.1	92.5	92.1	0.85	101	2.4	6.1	2.6	69	83	**1LE1502-2CB2**	■	-■■■■	■	360	0.69
75	**86**	**280 S**	1485	480	92.7	92.9	92.2	0.85	137	2.3	7	2.8	75	89	**1LE1502-2DB0**	■	-■■■■	■	540	1.2
90	**104**	**280 M**	1482	580	93	93.4	93.1	0.87	161	2.2	6.5	2.8	73	87	**1LE1502-2DB2**	■	-■■■■	■	560	1.4
110	**127**	**315 S**	1488	710	93.3	93.4	92.8	0.84	205	2.3	6.5	2.7	76	90	**1LE1502-3AB0**	■	-■■■■	■	730	1.9
132	**152**	**315 M**	1488	850	93.5	93.7	93.3	0.85	240	2.5	6.8	2.7	76	91	**1LE1502-3AB2**	■	-■■■■	■	760	2.2
160	**184**	**315 L**	1486	1030	93.8	93.9	93.5	0.86	285	2.7	7.2	2.7	76	90	**1LE1502-3AB4**	■	-■■■■	■	940	2.9
200	**230**	**315 L**	1486	1290	94	94.2	94	0.87	355	2.5	6.9	2.7	76	91	**1LE1502-3AB5**	■	-■■■■	■	1140	3.5

Voltages [2]		Version						Order code
50 Hz 230 VΔ/400 VY	60 Hz [1] 460 VY	**Standard**	**2**	**2**				–
50 Hz 400 VΔ/690 VY	60 Hz [1] 460 VΔ	**Standard**	**3**	**4**				–
50 Hz 500 VY		Without additional charge	**2**	**7**				–
50 Hz 500 VΔ		Without additional charge	**4**	**0**				–
For other voltages [1] and more information, see from page 3/104			**9**	**0**				**...**
Types of construction		Version						Order code
Without flange	IM B3 [3]	**Standard**			**A**			–
With flange	IM B5 [3]	With additional charge			**F**			–
With flange	IM B14 [3]	With additional charge			**K**			–
For other types of construction and more information, see from page 3/111					■			**...**
Motor protection		Version						Order code
Without		**Standard**				**A**		–
PTC thermistor with 3 temperature sensors		With additional charge				**B**		–
For other motor protection and more information, see from page 3/121						■		**...**
Terminal box position		Version						
Terminal box at top		**Standard**					**4**	
For other terminal box positions and more information, see from page 3/124							■	

Special versions					Order code(s)
Forced-air cooled motors w/o ext. fan/fan cover (IC418)	**1LE1502-....**	■	-■■■■	**-Z**	**F90 +...+...+...**
For options, see from page 3/132	**1LE1502-....**	■	-■■■■	**-Z**	**...+...+...+...**

[1] Operating values at rated power for 60 Hz are stored in the SPC.
[2] Parallel supply lines are required in the case of connection to ≤ 240 V. For frame size 315 with connection to ≤ 240 V, due to the high current, a drilled, removable entry plate (order code **R52**) or a larger terminal box (order code **R50**) can be used. Order codes **R52** and **R50** alter the motor dimensions.
[3] Types derived from IM B3 (IM B6/7/8, IM V6 and IM V5), from IM B5 (IM V3 and IM V1) and from IM B14 (IM V19 and IM V18) are possible, provided that no requirement exists for stamping of the type on the rating plate. The basic type IM B3, IM B5, or IM B14 is stamped as standard on the rating plate. If mounted in a different position, the position must be specified to ensure that the condensation drainage holes are positioned correctly.

© Innomotics 2024

Selection and ordering data

P_{rated}, 50 Hz/ P50	P_{rated}, 60 Hz/ P60 [1]	Frame size	Operating values at rated power n_{rated}, 50 Hz	T_{rated}, 50 Hz	η_{rated}, 50 Hz, 4/4	η_{rated}, 50 Hz, 3/4	η_{rated}, 50 Hz, 2/4	$\cos\varphi_{rated}$, 50 Hz, 4/4	I_{rated}, 50 Hz, 400 V	T_{LR}/T_{rated}, 50 Hz	I_{LR}/I_{rated}, 50 Hz	T_B/T_{rated}, 50 Hz	L_{pfA}, 50 Hz	L_{WA}, 50 Hz	Cast-iron series 1LE1502 – *Basic Line* Article No.	$m_{IM\ B3}$	J
kW	kW	FS	rpm	Nm	%	%	%		A				dB(A)	dB(A)		kg	kgm²
_ Cooling: Self-ventilated (IC411) or with order code F90 forced-air cooled without external fan and fan cover (IC418)																	
_ Efficiency according to IEC 60034-30-1: IE1 Standard Efficiency, service factor (SF) 1.1																	
_ Insulation: Thermal class 155 (temperature class F), IP55 degree of protection, utilization in accordance with thermal class 130 (temperature class B)																	
6-pole: 1000 rpm at 50 Hz, 1200 rpm at 60 Hz [1]																	
1.5	**1.75**	**100 L**	940	15.2	75.2	75.6	72.3	0.74	3.9	2	4	2.2	59	71	**1LE1502-1AC4** ■-■■■■	30	0.0065
2.2	**2.55**	**112 M**	940	22.5	77.7	78.4	76.6	0.72	5.7	2.6	4.6	2.7	59	71	**1LE1502-1BC2** ■-■■■■	37	0.0092
3	**3.45**	**132 S**	955	30	79.7	79.9	77.1	0.74	7.3	2	4.6	2.6	63	75	**1LE1502-1CC0** ■-■■■■	52	0.017
4	**4.55**	**132 M**	955	40	81.4	82.5	81.9	0.76	9.3	2.3	5.2	2.6	65	78	**1LE1502-1CC2** ■-■■■■	57	0.021
5.5	**6.3**	**132 M**	955	55	83.1	84	82.8	0.75	12.7	2.7	5.7	3	70	77	**1LE1502-1CC3** ■-■■■■	66	0.027
7.5	**8.6**	**160 M**	970	74	84.7	84.8	83.2	0.73	17.5	2.1	5.5	2.9	67	79	**1LE1502-1DC2** ■-■■■■	100	0.056
11	**12.6**	**160 L**	965	109	86.4	86.8	85.9	0.77	24	1.9	5.9	2.7	67	79	**1LE1502-1DC4** ■-■■■■	120	0.078
15	**18**	**180 L**	975	147	87.7	88.5	87.9	0.77	32	2.3	6.1	3	56	69	**1LE1502-1EC4** ■-■■■■	153	0.17
18.5	**22**	**200 L**	978	181	88.6	89.8	89.8	0.79	38	2.5	6.3	2.6	59	72	**1LE1502-2AC4** ■-■■■■	196	0.25
22	**26.5**	**200 L**	980	215	89.2	90	89.6	0.79	45	2.8	6.8	2.9	59	72	**1LE1502-2AC5** ■-■■■■	218	0.3
30	**36**	**225 M**	978	295	90.2	91	90.7	0.82	59	2.7	6	2.5	65	77	**1LE1502-2BC2** ■-■■■■	270	0.49
37	**44.5**	**250 M**	980	360	90.8	91.5	91.3	0.82	72	2.7	6	2.4	63	77	**1LE1502-2CC2** ■-■■■■	330	0.76
45	**54**	**280 S**	986	435	91.4	92	91.6	0.84	85	2.6	7	2.6	63	77	**1LE1502-2DC0** ■-■■■■	465	1.1
55	**66**	**280 M**	986	530	91.9	92.5	92.6	0.85	102	2.6	6.7	2.6	63	77	**1LE1502-2DC2** ■-■■■■	500	1.3
75	**90**	**315 S**	988	720	92.6	92.8	92.1	0.83	141	2.5	7.1	2.7	62	77	**1LE1502-3AC0** ■-■■■■	660	2.1
90	**108**	**315 M**	988	870	92.9	93.2	92.8	0.83	168	2.6	7.3	2.6	61	77	**1LE1502-3AC2** ■-■■■■	740	2.5
110	**132**	**315 L**	988	1060	93.3	93.6	93.4	0.86	198	2.6	6.8	2.8	61	78	**1LE1502-3AC4** ■-■■■■	880	3.2
132	**158**	**315 L**	988	1280	93.5	93.7	93.4	0.86	235	3	7.5	2.9	61	78	**1LE1502-3AC5** ■-■■■■	1030	4
160	**192**	**315 L**	988	1550	93.8	93.9	93.6	0.86	285	3.1	7.7	3	64	79	**1LE1502-3AC6** ■-■■■■	1160	4.7

Voltages [2]		Version					Order code
50 Hz 230 VΔ/400 VY	60 Hz [1] 460 VY	**Standard**	**2**	**2**			–
50 Hz 400 VΔ/690 VY	60 Hz [1] 460 VΔ	**Standard**	**3**	**4**			–
50 Hz 500 VY		Without additional charge	**2**	**7**			–
50 Hz 500 VΔ		Without additional charge	**4**	**0**			–
For other voltages [1] and more information, see from page 3/104			**9**	**0**			**...**
Types of construction		Version					Order code
Without flange	IM B3 [3]	**Standard**			**A**		–
With flange	IM B5 [3]	With additional charge			**F**		–
With flange	IM B14 [3]	With additional charge			**K**		–
For other types of construction and more information, see from page 3/111					■		**...**
Motor protection		Version					Order code
Without		**Standard**				**A**	–
PTC thermistor with 3 temperature sensors		With additional charge				**B**	–
For other motor protection and more information, see from page 3/121						■	**...**
Terminal box position		Version					
Terminal box at top		**Standard**					**4**
For other terminal box positions and more information, see from page 3/124							■
Special versions							Order code(s)
Forced-air cooled motors w/o ext. fan/fan cover (IC418)		**1LE1502-....** ■-■■■■ -Z					**F90 +...+...+...**
For options, see from page 3/132		**1LE1502-....** ■-■■■■ -Z					**...+...+...+...**

[1] Operating values at rated power for 60 Hz are stored in the SPC.

[2] Parallel supply lines are required in the case of connection to ≤ 240 V. For frame size 315 with connection to ≤ 240 V, due to the high current, a drilled, removable entry plate (order code **R52**) or a larger terminal box (order code **R50**) can be used. Order codes **R52** and **R50** alter the motor dimensions.

[3] Types derived from IM B3 (IM B6/7/8, IM V6 and IM V5), from IM B5 (IM V3 and IM V1) and from IM B14 (IM V19 and IM V18) are possible, provided that no requirement exists for stamping of the type on the rating plate. The basic type IM B3, IM B5, or IM B14 is stamped as standard on the rating plate. If mounted in a different position, the position must be specified to ensure that the condensation drainage holes are positioned correctly.

© Innomotics 2024

Selection and ordering data

P_{rated}, 50 Hz/ P50	P_{rated}, 60 Hz/ P60 [1]	Frame size	Operating values at rated power n_{rated}, 50 Hz	T_{rated}, 50 Hz	η_{rated}, 50 Hz, 4/4	η_{rated}, 50 Hz, 3/4	η_{rated}, 50 Hz, 2/4	$\cos\varphi_{rated}$, 50 Hz, 4/4	I_{rated}, 50 Hz, 400 V	T_{LR}/T_{rated}, 50 Hz	I_{LR}/I_{rated}, 50 Hz	T_B/T_{rated}, 50 Hz	L_{pfA}, 50 Hz	L_{WA}, 50 Hz	Cast-iron series 1LE1502 – *Basic Line* Article No.	$m_{IM\,B3}$	J
kW	kW	FS	rpm	Nm	%	%	%		A				dB(A)	dB(A)		kg	kgm²
_ Cooling: Self-ventilated (IC411) or with order code F90 forced-air cooled without external fan and fan cover (IC418)																	
_ Efficiency according to IEC 60034-30-1: IE1 Standard Efficiency, service factor (SF) 1.1																	
_ Insulation: Thermal class 155 (temperature class F), IP55 degree of protection, utilization in accordance with thermal class 130 (temperature class B)																	
8-pole: 750 rpm at 50 Hz, 900 rpm at 60 Hz [1]																	
0.75	**0.86**	**100 L**	705	10.2	61.2	58.1	50.5	0.62	2.85	1.9	3	2.2	60	72	**1LE1502-1AD4** ■-■■■■	28	0.0056
1.1	**1.27**	**100 L**	690	15.2	66.5	65.9	61.5	0.61	3.9	2	3.2	2.3	64	72	**1LE1502-1AD5** ■-■■■■	33	0.0078
1.5	**1.75**	**112 M**	700	20.5	70.2	71.2	69.4	0.66	4.65	1.9	3.5	2.1	67	78	**1LE1502-1BD2** ■-■■■■	42	0.0094
2.2	**2.55**	**132 S**	715	29.5	74.2	74.1	71.4	0.66	6.5	1.7	3.9	2.4	63	75	**1LE1502-1CD0** ■-■■■■	60	0.019
3	**3.45**	**132 M**	715	40	77	77.4	75.2	0.68	8.3	1.8	3.9	2.2	63	75	**1LE1502-1CD2** ■-■■■■	62	0.024
4	**4.55**	**160 M**	720	53	79.2	79.2	76.3	0.67	10.9	1.6	4.1	2.3	63	75	**1LE1502-1DD2** ■-■■■■	89	0.044
5.5	**6.3**	**160 M**	720	73	81.4	81.9	80.3	0.68	14.3	1.6	4	2.2	63	75	**1LE1502-1DD3** ■-■■■■	102	0.056
7.5	**8.6**	**160 L**	715	100	83.1	83.7	82.4	0.69	18.9	1.7	3.8	2.2	63	75	**1LE1502-1DD4** ■-■■■■	120	0.077
11	**13.2**	**180 L**	720	146	85	86.2	86	0.7	26.5	1.9	5	2.5	65	78	**1LE1502-1ED4** ■-■■■■	153	0.2
15	**18**	**200 L**	718	199	86.2	87.9	88.4	0.75	33.5	2.5	5.5	2.9	55	69	**1LE1502-2AD5** ■-■■■■	218	0.3
18.5	**22**	**225 S**	730	240	86.9	87.9	87.6	0.78	39.5	2.2	5.5	2.7	59	72	**1LE1502-2BD0** ■-■■■■	265	0.43
22	**26.5**	**225 M**	730	290	87.4	88.3	88.1	0.79	46	2.3	5.5	2.7	60	73	**1LE1502-2BD2** ■-■■■■	280	0.5
30	**36**	**250 M**	732	390	88.3	89.2	89.2	0.81	61	2.3	5.5	2.6	54	68	**1LE1502-2CD2** ■-■■■■	370	0.84
37	**44.5**	**280 S**	735	480	88.8	89.7	89.7	0.81	74	2.1	5	2.1	54	68	**1LE1502-2DD0** ■-■■■■	460	1.22
45	**54**	**280 M**	735	580	89.2	90.4	90.8	0.81	90	2.1	5.3	2.1	62	77	**1LE1502-2DD2** ■-■■■■	500	1.42
55	**66**	**315 S**	740	710	89.7	90.1	89.7	0.8	111	2.1	5.7	2.6	69	83	**1LE1502-3AD0** ■-■■■■	640	2
75	**90**	**315 M**	738	970	90.3	90.7	90.5	0.81	148	2.3	5.9	2.7	69	84	**1LE1502-3AD2** ■-■■■■	720	2.5
90	**108**	**315 L**	738	1160	90.7	91.2	91.2	0.84	171	2.2	5.9	2.6	68	83	**1LE1502-3AD4** ■-■■■■	840	3.1
110	**132**	**315 L**	740	1420	91.1	91.6	91.5	0.82	215	2.7	6.7	2.9	73	87	**1LE1502-3AD5** ■-■■■■	1000	3.9
132	**158**	**315 L**	740	1700	91.5	91.9	91.6	0.81	255	2.9	7.2	3.3	75	89	**1LE1502-3AD6** ■-■■■■	1080	4.5

Voltages [2]		Version					Order code
50 Hz 230 VΔ/400 VY	60 Hz [1] 460 VY	**Standard**	**2**	**2**			–
50 Hz 400 VΔ/690 VY	60 Hz [1] 460 VΔ	**Standard**	**3**	**4**			–
50 Hz 500 VY		Without additional charge	**2**	**7**			–
50 Hz 500 VΔ		Without additional charge	**4**	**0**			–
For other voltages [1] and more information, see from page 3/104			**9**	**0**			**...**
Types of construction		Version					Order code
Without flange	IM B3 [3]	**Standard**		**A**			–
With flange	IM B5 [3]	With additional charge		**F**			–
With flange	IM B14 [3]	With additional charge		**K**			–
For other types of construction and more information, see from page 3/111				■			**...**
Motor protection		Version					Order code
Without		**Standard**			**A**		–
PTC thermistor with 3 temperature sensors		With additional charge			**B**		–
For other motor protection and more information, see from page 3/121					■		**...**
Terminal box position		Version					
Terminal box at top		**Standard**				**4**	
For other terminal box positions and more information, see from page 3/124						■	

Special versions		Order code(s)
Forced-air cooled motors w/o ext. fan/fan cover (IC418)	**1LE1502-....** ■-■■■■ **-Z**	**F90 +...+...+...**
For options, see from page 3/132	**1LE1502-....** ■-■■■■ **-Z**	**...+...+...+...**

[1] Operating values at rated power for 60 Hz are stored in the SPC.

[2] Parallel supply lines are required in the case of connection to ≤ 240 V.
For frame size 315 with connection to ≤ 240 V, due to the high current, a drilled, removable entry plate (order code **R52**) or a larger terminal box (order code **R50**) can be used. Order codes **R52** and **R50** alter the motor dimensions.

[3] Types derived from IM B3 (IM B6/7/8, IM V6 and IM V5), from IM B5 (IM V3 and IM V1) and from IM B14 (IM V19 and IM V18) are possible, provided that no requirement exists for stamping of the type on the rating plate. The basic type IM B3, IM B5, or IM B14 is stamped as standard on the rating plate. If mounted in a different position, the position must be specified to ensure that the condensation drainage holes are positioned correctly.

© Innomotics 2024

Cast-iron series Innomotics SD 1LE1502 Basic Line with increased power – self-ventilated or forced-air cooled

Selection and ordering data

P_{rated}, 50 Hz/ P50 kW	P_{rated}, 60 Hz/ P60 [1] kW	Frame size FS	Operating values at rated power: n_{rated}, 50 Hz rpm	T_{rated}, 50 Hz Nm	η_{rated}, 50 Hz, 4/4 %	η_{rated}, 50 Hz, 3/4 %	η_{rated}, 50 Hz, 2/4 %	$\cos\varphi_{rated}$, 50 Hz, 4/4	I_{rated}, 50 Hz, 400 V A	T_{LR}/T_{rated}, 50 Hz	I_{LR}/I_{rated}, 50 Hz	T_B/T_{rated}, 50 Hz	L_{pfA}, 50 Hz dB(A)	L_{WA}, 50 Hz dB(A)	Cast-iron series 1LE1502 – *Basic Line* Article No.	$m_{IM\ B3}$ kg	J kgm²
_ Cooling: Self-ventilated (IC411) or with order code F90 forced-air cooled without external fan and fan cover (IC418)																	
_ Efficiency according to IEC 60034-30-1: IE1 Standard Efficiency, service factor (SF) 1.1																	
_ Insulation: Thermal class 155 (temperature class F), IP55 degree of protection, utilization in accordance with thermal class 155 (temperature class F)																	
2-pole: 3000 rpm at 50 Hz, 3600 rpm at 60 Hz [1]																	
4	**4.6**	**100 L**	2850	13.4	83.1	83.9	83	0.85	8.2	4.5	7	4.1	67	79	**1LE1502-1AA6** ■-■■■■	33	0.0044
5.5	**6.3**	**112 M**	2935	17.9	84.7	84.7	82.7	0.86	10.9	2.9	7.5	3.8	69	81	**1LE1502-1BA6** ■-■■■■	40	0.0085
11	**12.6**	**132 M**	2920	36	87.6	88.3	87.8	0.9	20	2.8	7.5	3.7	68	80	**1LE1502-1CA6** ■-■■■■	76	0.022
22	**24.5**	**160 L**	2935	72	89.9	90.2	89.5	0.9	39	2.6	7.5	3.4	70	82	**1LE1502-1DA6** ■-■■■■	125	0.049
30	**33.5**	**180 L**	2940	97	90.7	91.5	91.5	0.89	54	2.4	8.1	3.5	72	85	**1LE1502-1EA6** ■-■■■■	175	0.094
45	**51**	**200 L**	2955	145	91.7	92.3	92.4	0.85	83	2.5	8.1	3.6	71	85	**1LE1502-2AA6** ■-■■■■	241	0.176
55	**62**	**225 M**	2960	177	92.1	92.4	92	0.88	98	2.5	7.3	3.2	76	89	**1LE1502-2BA6** ■-■■■■	330	0.27
75	**84**	**250 M**	2970	240	92.7	92.8	92.1	0.87	134	2.4	7.3	3.1	76	89	**1LE1502-2CA6** ■-■■■■	420	0.48
110	**123**	**280 M**	2975	355	93.3	93.5	93.1	0.9	189	2.4	7.3	3.1	77	90	**1LE1502-2DA6** ■-■■■■	620	1
4-pole: 1500 rpm at 50 Hz, 1800 rpm at 60 Hz [1]																	
4	**4.6**	**100 L**	1435	26.5	83.1	83.8	82.3	0.81	8.6	2.9	5.8	3.1	60	72	**1LE1502-1AB6** ■-■■■■	36	0.01
5.5	**6.3**	**112 M**	1420	37	84.7	85.9	85.3	0.81	11.6	3	5.8	3.1	58	70	**1LE1502-1BB6** ■-■■■■	43	0.012
11	**12.6**	**132 M**	1450	72	87.6	88.2	87.6	0.84	21.5	2.5	7.2	3	64	76	**1LE1502-1CB6** ■-■■■■	76	0.033
18.5	**21.3**	**160 L**	1460	121	89.3	89.8	89.2	0.85	35	2.7	7.2	3.2	65	77	**1LE1502-1DB6** ■-■■■■	125	0.068
30	**34.5**	**180 L**	1465	196	90.7	91	90.6	0.79	60	2.6	7.2	3.4	70	77	**1LE1502-1EB6** ■-■■■■	184	0.159
37	**42.5**	**200 L**	1470	240	91.2	92	92.1	0.82	71	2.4	6.8	2.9	64	78	**1LE1502-2AB6** ■-■■■■	236	0.246
55	**63**	**225 M**	1475	355	92.1	92.8	92.6	0.86	100	2.5	6.7	2.6	70	83	**1LE1502-2BB6** ■-■■■■	320	0.49
75	**86**	**250 M**	1482	485	92.7	93.1	92.6	0.84	139	2.5	7.4	3	73	87	**1LE1502-2CB6** ■-■■■■	440	0.86
110	**127**	**280 M**	1486	710	93.3	93.5	93	0.85	200	2.6	8	3.3	75	89	**1LE1502-2DB6** ■-■■■■	680	1.7

Voltages [2]		Version					Order code
50 Hz 230 VΔ/400 VY	60 Hz [1] 460 VY	**Standard**	**2**	**2**			–
50 Hz 400 VΔ/690 VY	60 Hz [1] 460 VΔ	**Standard**	**3**	**4**			–
50 Hz 500 VY		Without additional charge	**2**	**7**			–
50 Hz 500 VΔ		Without additional charge	**4**	**0**			–
For other voltages [1] and more information, see from page 3/104			**9**	**0**			**...**
Types of construction		Version					Order code
Without flange	IM B3 [3]	**Standard**			**A**		–
With flange	IM B5 [3]	With additional charge			**F**		–
With flange	IM B14 [3]	With additional charge			**K**		–
For other types of construction and more information, see from page 3/111					■		**...**
Motor protection		Version					Order code
Without		**Standard**				**A**	–
PTC thermistor with 3 temperature sensors		With additional charge				**B**	–
For other motor protection and more information, see from page 3/121						■	**...**
Terminal box position		Version					
Terminal box at top		**Standard**					**4**
For other terminal box positions and more information, see from page 3/124							■
Special versions							Order code(s)
Forced-air cooled motors w/o ext. fan/fan cover (IC418)		**1LE1502-....** ■-■■■■ -Z					**F90+...+...+...**
For options, see from page 3/132		**1LE1502-....** ■-■■■■ -Z					**...+...+...+...**

[1] Operating values at rated power for 60 Hz are stored in the SPC.

[2] Parallel supply lines are required in the case of connection to ≤ 240 V. For frame size 315 with connection to ≤ 240 V, due to the high current, a drilled, removable entry plate (order code **R52**) or a larger terminal box (order code **R50**) can be used. Order codes **R52** and **R50** alter the motor dimensions.

[3] Types derived from IM B3 (IM B6/7/8, IM V6 and IM V5), from IM B5 (IM V3 and IM V1) and from IM B14 (IM V19 and IM V18) are possible, provided that no requirement exists for stamping of the type on the rating plate. The basic type IM B3, IM B5, or IM B14 is stamped as standard on the rating plate. If mounted in a different position, the position must be specified to ensure that the condensation drainage holes are positioned correctly.

© Innomotics 2024

Selection and ordering data

P_{rated}, 50 Hz/ P50 kW	P_{rated}, 60 Hz/ P60 [1] kW	Frame size FS	Operating values at rated power: n_{rated}, 50 Hz rpm	T_{rated}, 50 Hz Nm	η_{rated}, 50 Hz, 4/4 %	η_{rated}, 50 Hz, 3/4 %	η_{rated}, 50 Hz, 2/4 %	$\cos\varphi_{rated}$, 50 Hz, 4/4	I_{rated}, 50 Hz, 400 V A	T_{LR}/T_{rated}, 50 Hz	I_{LR}/I_{rated}, 50 Hz	T_B/T_{rated}, 50 Hz	L_{pfA}, 50 Hz dB(A)	L_{WA}, 50 Hz dB(A)	Cast-iron series 1LE1502 – *Basic Line* Article No.	$m_{IM\ B3}$ kg	J kgm²
_ Cooling: Self-ventilated (IC411) or with order code F90 forced-air cooled without external fan and fan cover (IC418)																	
_ Efficiency according to IEC 60034-30-1: IE1 Standard Efficiency, service factor (SF) 1.1																	
_ Insulation: Thermal class 155 (temperature class F), IP55 degree of protection, utilization in accordance with thermal class 155 (temperature class F)																	
6-pole: 1000 rpm at 50 Hz, 1200 rpm at 60 Hz [1]																	
2.2	**2.55**	**100 L**	930	22.5	77.7	79.5	78.1	0.78	5.2	2	4	2.2	59	71	**1LE1502-1AC6** ■-■■■■	35	0.0084
3	**3.45**	**112 M**	945	30.5	79.7	79.5	76.3	0.72	7.5	2.9	4.6	3	57	69	**1LE1502-1BC6** ■-■■■■	45	0.013
7.5	**8.6**	**132 M**	950	75	84.7	85.3	84.1	0.74	17.3	2.4	5.3	3	63	75	**1LE1502-1CC6** ■-■■■■	78	0.032
15	**17.3**	**160 L**	965	148	87.7	87.9	86.5	0.75	33	2.9	6	3.4	67	79	**1LE1502-1DC6** ■-■■■■	140	0.094
18.5	**22**	**180 L**	970	182	88.6	89.4	89.1	0.77	39	2.2	5.9	2.9	56	69	**1LE1502-1EC6** ■-■■■■	166	0.206
30	**34.5**	**200 L**	975	295	90.2	91.4	91.7	0.78	62	2.6	6	2.7	61	75	**1LE1502-2AC6** ■-■■■■	241	0.381
37	**44.5**	**225 M**	978	360	90.8	91.5	91.5	0.82	72	2.5	6.1	2.8	76	93	**1LE1502-2BC6** ■-■■■■	310	0.62
45	**54**	**250 M**	982	440	91.4	92.2	92.1	0.83	86	2.7	6.6	2.3	76	95	**1LE1502-2CC6** ■-■■■■	390	0.93
75	**90**	**280 M**	985	730	92.6	93.3	93.2	0.84	139	2.9	7	2.7	61	75	**1LE1502-2DC6** ■-■■■■	560	1.7
8-pole: 750 rpm at 50 Hz, 900 rpm at 60 Hz [1]																	
15	**18**	**180 L**	718	199	86.2	87.5	87.2	0.74	34	2.1	4.7	2.3	64	78	**1LE1502-1ED6** ■-■■■■	187	0.263
18.5	**22**	**200 L**	720	245	86.9	88.2	88.4	0.76	40	2.7	6.1	3.2	59	72	**1LE1502-2AD6** ■-■■■■	250	0.416
30	**36**	**225 M**	730	390	88.3	89.1	89.1	0.79	62	2.6	5.6	2.8	57	70	**1LE1502-2BD6** ■-■■■■	320	0.73
37	**44.5**	**250 M**	730	485	88.8	89.8	89.9	0.83	72	2.3	5.7	2.6	63	77	**1LE1502-2CD6** ■-■■■■	420	1
55	**66**	**280 M**	736	710	89.7	90.4	90.5	0.8	111	2.5	5.7	2.5	70	81	**1LE1502-2DD6** ■-■■■■	550	1.6

Voltages [2]		Version					Order code
50 Hz 230 VΔ/400 VY	60 Hz [1] 460 VY	**Standard**	**2**	**2**			–
50 Hz 400 VΔ/690 VY	60 Hz [1] 460 VΔ	**Standard**	**3**	**4**			–
50 Hz 500 VY		Without additional charge	**2**	**7**			–
50 Hz 500 VΔ		Without additional charge	**4**	**0**			–
For other voltages [1] and more information, see from page 3/104			**9**	**0**			**...**
Types of construction		Version					Order code
Without flange	IM B3 [3]	**Standard**		**A**			–
With flange	IM B5 [3]	With additional charge		**F**			–
With flange	IM B14 [3]	With additional charge		**K**			–
For other types of construction and more information, see from page 3/111				■			**...**
Motor protection		Version					Order code
Without		**Standard**			**A**		–
PTC thermistor with 3 temperature sensors		With additional charge			**B**		–
For other motor protection and more information, see from page 3/121					■		**...**
Terminal box position		Version					
Terminal box at top		**Standard**				**4**	
For other terminal box positions and more information, see from page 3/124						■	
Special versions							Order code(s)
Forced-air cooled motors w/o ext. fan/fan cover (IC418)		**1LE1502- . . . .** ■-■■■■ -Z					**F90 +...+...+...**
For options, see from page 3/132		**1LE1502- . . . .** ■-■■■■ -Z					**...+...+...+...**

[1] Operating values at rated power for 60 Hz are stored in the SPC.
[2] Parallel supply lines are required in the case of connection to ≤ 240 V. For frame size 315 with connection to ≤ 240 V, due to the high current, a drilled, removable entry plate (order code **R52**) or a larger terminal box (order code **R50**) can be used. Order codes **R52** and **R50** alter the motor dimensions.
[3] Types derived from IM B3 (IM B6/7/8, IM V6 and IM V5), from IM B5 (IM V3 and IM V1) and from IM B14 (IM V19 and IM V18) are possible, provided that no requirement exists for stamping of the type on the rating plate. The basic type IM B3, IM B5, or IM B14 is stamped as standard on the rating plate. If mounted in a different position, the position must be specified to ensure that the condensation drainage holes are positioned correctly.

© Innomotics 2024

Aluminum series Innomotics GP 1LE1043 – self-ventilated or forced-air cooled

Selection and ordering data

Technical specifications at 60 Hz/P50 power rating

P_{rated}, 60 Hz/P50	P_{rated}, 60 Hz/P60	Frame size	Operating values at rated power: n_{rated}, 60 Hz	T_{rated}, 60 Hz	Different IE class 60 Hz/P60	η_{rated}, 60 Hz, 4/4	η_{rated}, 60 Hz, 3/4	η_{rated}, 60 Hz, 2/4	$\cos\varphi_{rated}$, 60 Hz, 4/4	I_{rated}, 60 Hz, 460 V	T_{LR}/T_{rated}, 60 Hz	I_{LR}/I_{rated}, 60 Hz	T_B/T_{rated}, 60 Hz	L_{pfA}, 60 Hz	L_{WA}, 60 Hz	Aluminum series 1LE1043 Article No.	$m_{IM\ B3}$	J
kW	kW	FS	rpm	Nm		%	%	%		A				dB(A)	dB(A)	▲ New	kg	kgm²
_ Cooling: Self-ventilated (IC411) or with order code F90 forced-air cooled without external fan and fan cover (IC418)																		
_ Efficiency according to IEC 60034-30-1: IE3 Premium Efficiency																		
_ Insulation: Thermal class 155 (temperature class F), IP55 degree of protection, utilization in accordance with thermal class 130 (temperature class B)																		
2-pole: 3000 rpm at 50 Hz, 3600 rpm at 60 Hz																		
0.18	**0.21**	**63 M**	3475	0.49		65.6	62.3	56	0.72	0.48	2.7	5.3	3.6	59	67	▲ **1LE1043-0BA2** ■-■■■■	4	0.00022
0.25	**0.29**	**63 M**	3465	0.69		69.5	66.6	59.3	0.76	0.59	2.4	5.2	3.1	56	64	▲ **1LE1043-0BA3** ■-■■■■	5	0.00026
0.37	**0.43**	**71 M**	3470	1.02		73.4	71.7	67	0.73	0.87	4.2	6.8	4.2	57	68	▲ **1LE1043-0CA2** ■-■■■■	7	0.00045
0.55	**0.63**	**71 M**	3470	1.51		76.8	75.3	71	0.73	1.23	4.5	7.2	4.5	62	73	▲ **1LE1043-0CA3** ■-■■■■	8	0.00056
0.75	**0.86**	**80 M**	3480	2.05		77	77.2	75.7	0.84	1.45	3	7.1	3.6	64	75	**1LE1043-0DA2** ■-■■■■	12	0.0011
1.1	**1.27**	**80 M**	3500	3		84	84	82	0.83	1.98	3.3	8.4	4	64	75	**1LE1043-0DA3** ■-■■■■	12	0.0013
1.5	**1.75**	**90 S**	3525	4.05		85.5	84.8	82.3	0.84	2.6	3.1	9.8	4.9	69	81	**1LE1043-0EA0** ■-■■■■	16	0.0021
2.2	**2.55**	**90 L**	3530	6	IE2	86.5	86.4	84.5	0.87	3.65	3	9.6	4.9	69	81	**1LE1043-0EA4** ■-■■■■	20	0.0031
3	**3.45**	**100 L**	3525	8.1		88.5	88.2	86.7	0.85	5	4.6	11.2	5.6	75	83	**1LE1043-1AA4** ■-■■■■	25	0.0041
4	**4.55**	**112 M**	3555	9.9		88.5	88.4	86.7	0.87	6	3.3	11.8	4.7	80	88	**1LE1043-1BA2** ■-■■■■	32	0.0079
5.5	**6.3**	**132 S**	3550	14.8	IE2	89.5	89	87	0.87	8.9	3	11.1	4.6	74	82	**1LE1043-1CA0** ■-■■■■	48	0.0168
7.5	**8.6**	**132 S**	3555	20		90.2	90.5	90	0.91	11.5	2.4	9.5	4.7	72	84	**1LE1043-1CA1** ■-■■■■	57	0.031
11	**12.6**	**160 M**	3555	29.5		91	90.4	88.4	0.88	17.2	2.9	9.5	4	82	90	**1LE1043-1DA2** ■-■■■■	75	0.053
15	**17.3**	**160 M**	3560	40		91	90.4	88.5	0.86	24	4	11.8	5.2	81	89	**1LE1043-1DA3** ■-■■■■	78	0.043
18.5	**21.3**	**160 L**	3560	49.5		91.7	91.5	90.3	0.9	28	3.1	9.4	4.4	77	89	**1LE1043-1DA4** ■-■■■■	94	0.068
22	**24.5**	**180 M**	3560	59		91.7	91.8	90.9	0.89	34	2.5	9	3.9	77	89	**1LE1043-1EA2** ■-■■■■	129	0.08
30	**33.5**	**200 L**	3560	80		92.4	91.9	90.1	0.87	47	3	8.5	3.7	77	84	**1LE1043-2AA4** ■-■■■■	173	0.134
37	**41.5**	**200 L**	3560	99		93	92.8	91.6	0.88	57	2.8	7.5	3.6	77	84	**1LE1043-2AA5** ■-■■■■	194	0.158

Voltages		Version				Order code
50 Hz 230 VΔ/400 VY	60 Hz 460 VY	**Standard**	**2**	**2**		–
50 Hz 400 VΔ/690 VY	60 Hz 460 VΔ	**Standard**	**3**	**4**		–
50 Hz 500 VY		Without additional charge	**2**	**7**		–
50 Hz 500 VΔ		Without additional charge	**4**	**0**		–
For other voltages and more information, see from page 3/101			**9**	**0**		...
Types of construction		Version				Order code
Without flange	IM B3 [1]	**Standard**		**A**		–
With flange	IM B5 [1]	With additional charge		**F**		–
With flange	IM B14 [1]	With additional charge		**K**		–
For other types of construction and more information, see from page 3/107				■		...
Motor protection		Version				Order code
Without		**Standard**			**A**	–
PTC thermistor with 1 or 3 temperature sensors (frame sizes 80, 90 or 100 to 200)		With additional charge			**B**	–
For other motor protection and more information, see from page 3/120					■	...
Terminal box position		Version				
Terminal box at top		**Standard**			**4**	
For other terminal box positions and more information, see from page 3/123					■	

Special versions		Order code(s)
Forced-air cooled motors w/o ext. fan/fan cover (IC416)	**1LE1043-....** ■–■■■■ -Z	**F90 +...+...+...**
For options and information, see from page 3/126	**1LE1043-....** ■–■■■■ -Z	...+...+...+...

[1] Types derived from IM B3 (IM B6/7/8, IM V6, and IM V5), from IM B5 (IM V3 and IM V1) and from IM B14 (IM V19 and IM V18) are possible, provided that no requirements exist for condensation drainage holes (**H03**) or stamping of the type on the rating plate. The basic type IM B3, IM B5, or IM B14 is stamped as standard on the rating plate. For orders with condensation drainage holes (**H03**), the type must be specified.

© Innomotics 2024

Selection and ordering data

Technical specifications at 60 Hz/P50 power rating

P_{rated}, 60 Hz/P50	P_{rated}, 60 Hz/P60	Frame size	Operating values at rated power: n_{rated}, 60 Hz	T_{rated}, 60 Hz	Different IE class 60 Hz/P60	η_{rated}, 60 Hz, 4/4	η_{rated}, 60 Hz, 3/4	η_{rated}, 60 Hz, 2/4	$\cos\varphi_{rated}$, 60 Hz, 4/4	I_{rated}, 60 Hz, 460 V	T_{LR}/T_{rated}, 60 Hz	I_{LR}/I_{rated}, 60 Hz	T_B/T_{rated}, 60 Hz	L_{pfA}, 60 Hz	L_{WA}, 60 Hz	Aluminum series 1LE1043 Article No.			$m_{IM\ B3}$	J
kW	kW	FS	rpm	Nm		%	%	%		A				dB(A)	dB(A)	▲ New			kg	kgm^2
_ Cooling: Self-ventilated (IC411) or with order code F90 forced-air cooled without external fan and fan cover (IC418)																				
_ Efficiency according to IEC 60034-30-1: IE3 Premium Efficiency																				
_ Insulation: Thermal class 155 (temperature class F), IP55 degree of protection, utilization in accordance with thermal class 130 (temperature class B)																				
4-pole: 1500 rpm at 50 Hz, 1800 rpm at 60 Hz																				
0.12	**0.14**	**63 M**	1710	0.67		67	64	57.1	0.62	0.36	2.9	4.3	3.3	64	72	▲ **1LE1043-0BB2**	■ - ■■■■		5	0.00045
0.18	**0.21**	**63 M**	1715	1		69.5	66.9	60.6	0.6	0.54	3.6	4.6	3.7	64	71	▲ **1LE1043-0BB3**	■ - ■■■■		6	0.00048
0.25	**0.29**	**71 M**	1715	1.39		73.4	72.3	68	0.68	0.63	2.9	4.9	3.1	47	58	▲ **1LE1043-0CB2**	■ - ■■■■		7	0.00095
0.37	**0.43**	**71 M**	1720	2.05		78.2	76.9	72.5	0.66	0.9	3.6	5.7	3.8	62	73	▲ **1LE1043-0CB3**	■ - ■■■■		9	0.0014
0.75	**0.86**	**80 M**	1760	4.05		83.5	82.6	79.7	0.71	1.59	3.1	8.3	4.7	58	66	**1LE1043-0DB3**	■ - ■■■■		13	0.0029
1.1	**1.27**	**90 S**	1750	6	IE2	86.5	86.4	84.2	0.75	2.15	3.4	8.2	4.4	58	70	**1LE1043-0EB0**	■ - ■■■■		15	0.0036
1.5	**1.75**	**90 L**	1755	8.2		86.5	86.6	84.7	0.77	2.85	3.4	8.6	4.3	59	67	**1LE1043-0EB4**	■ - ■■■■		20	0.0049
2.2	**2.55**	**100 L**	1760	11.9		89.5	89.5	88	0.8	3.85	3.5	9.9	4.6	70	78	**1LE1043-1AB4**	■ - ■■■■		25	0.01
3	**3.45**	**100 L**	1760	16.3	IE2	89.5	89.4	88	0.78	5.4	3.5	9.9	4.7	70	78	**1LE1043-1AB5**	■ - ■■■■		34	0.017
4	**4.55**	**112 M**	1770	20		89.5	90	88.3	0.8	6.5	2.9	8.2	4.3	62	74	**1LE1043-1BB2**	■ - ■■■■		64	0.034
5.5	**6.3**	**132 S**	1775	29.5		91.7	91.6	90.5	0.81	9.3	3.1	10	4.2	68	80	**1LE1043-1CB0**	■ - ■■■■		61	0.0334
7.5	**8.6**	**132 M**	1770	40.5	IE2	91.7	91.6	90.6	0.79	13	3.4	9.8	4.3	68	76	**1LE1043-1CB2**	■ - ■■■■		78	0.0583
11	**12.6**	**160 M**	1775	59		92.4	92.6	92	0.81	18.4	3.8	9	4	70	78	**1LE1043-1DB2**	■ - ■■■■		106	0.089
15	**17.3**	**160 L**	1775	81	IE2	93	92.9	92.1	0.81	25	3.1	8.9	3.8	66	74	**1LE1043-1DB4**	■ - ■■■■		134	0.13
18.5	**21.3**	**180 M**	1775	100		93.6	93.7	93.1	0.81	30.5	2.7	7.8	3.6	68	75	**1LE1043-1EB2**	■ - ■■■■		142	0.14
22	**25.3**	**180 L**	1775	118		93.6	93.8	93.3	0.81	36.5	2.8	7.7	3.7	70	77	**1LE1043-1EB4**	■ - ■■■■		189	0.24
30	**34.5**	**200 L**	1778	161	IE2	94.1	94.2	93.6	0.83	48	2.6	8.8	3.5	70	77	**1LE1043-2AB5**	■ - ■■■■		64	0.046

Voltages		Version					Order code
50 Hz 230 VΔ/400 VY	60 Hz 460 VY	**Standard**	**2**	**2**			–
50 Hz 400 VΔ/690 VY	60 Hz 460 VΔ	**Standard**	**3**	**4**			–
50 Hz 500 VY		Without additional charge	**2**	**7**			–
50 Hz 500 VΔ		Without additional charge	**4**	**0**			–
For other voltages and more information, see from page 3/101			**9**	**0**			...
Types of construction		Version					Order code
Without flange	IM B3 [1]	**Standard**		**A**			–
With flange	IM B5 [1]	With additional charge		**F**			–
With flange	IM B14 [1]	With additional charge		**K**			–
For other types of construction and more information, see from page 3/107				■			...
Motor protection		Version					Order code
Without		**Standard**			**A**		–
PTC thermistor with 1 or 3 temperature sensors (frame sizes 80, 90 or 100 to 200)		With additional charge			**B**		–
For other motor protection and more information, see from page 3/120					■		...
Terminal box position		Version					
Terminal box at top		**Standard**				**4**	
For other terminal box positions and more information, see from page 3/123						■	
Special versions							Order code(s)
Forced-air cooled motors w/o ext. fan/fan cover (IC416)		**1LE1043-....**	■ – ■■■■			-Z	**F90 +...+...+...**
For options and information, see from page 3/126		**1LE1043-....**	■ – ■■■■			-Z	**...+...+...+...**

[1] Types derived from IM B3 (IM B6/7/8, IM V6, and IM V5), from IM B5 (IM V3 and IM V1) and from IM B14 (IM V19 and IM V18) are possible, provided that no requirements exist for condensation drainage holes (**H03**) or stamping of the type on the rating plate. The basic type IM B3, IM B5, or IM B14 is stamped as standard on the rating plate. For orders with condensation drainage holes (**H03**), the type must be specified.

© Innomotics 2024

Selection and ordering data

Technical specifications at 60 Hz/P50 power rating

P_{rated}, 60 Hz/P50	P_{rated}, 60 Hz/P60	Frame size	Operating values at rated power: n_{rated}, 60 Hz	T_{rated}, 60 Hz	Different IE class 60 Hz/P60	η_{rated}, 60 Hz, 4/4	η_{rated}, 60 Hz, 3/4	η_{rated}, 60 Hz, 2/4	$\cos\varphi_{rated}$, 60 Hz, 4/4	I_{rated}, 60 Hz, 460 V	T_{LR}/T_{rated}, 60 Hz	I_{LR}/I_{rated}, 60 Hz	T_B/T_{rated}, 60 Hz	L_{pfA}, 60 Hz	L_{WA}, 60 Hz	Aluminum series 1LE1043 Article No.	$m_{IM\,B3}$	J
kW	kW	FS	rpm	Nm		%	%	%		A				dB(A)	dB(A)	▲ New	kg	kgm²
_ Cooling: Self-ventilated (IC411) or with order code F90 forced-air cooled without external fan and fan cover (IC418)																		
_ Efficiency according to IEC 60034-30-1: IE3 Premium Efficiency																		
_ Insulation: Thermal class 155 (temperature class F), IP55 degree of protection, utilization in accordance with thermal class 130 (temperature class B)																		
6-pole: 1000 rpm at 50 Hz, 1200 rpm at 60 Hz																		
0.18	**0.21**	**71 M**	1110	2.15		71.4	70.6	66.4	0.64	0.69	3.2	3.9	3.2	48	59	▲ **1LE1043-0CC2** ■ - ■■■■	7	0.00098
0.25	**0.29**	**71 M**	1155	6.2	IE2	82.5	82.4	79.9	0.65	1.76	2.4	5.3	3.1	46	58	▲ **1LE1043-0CC3** ■ - ■■■■	9	0.0014
0.75	**0.86**	**90 S**	1180	8.9	IE2	87.5	87.2	84.8	0.69	2.3	2.4	6.7	3.3	62	74	**1LE1043-0EC0** ■ - ■■■■	16	0.004
1.1	**1.27**	**100 L**	1175	12.2	IE2	88.5	88.3	86.2	0.73	2.9	2.2	6.9	3.2	65	77	**1LE1043-1AC3** ■ - ■■■■	25	0.011
1.5	**1.75**	**112 S**	1180	17.8	IE2	89.5	89.2	87.7	0.72	4.3	2.4	7.3	3.5	63	71	**1LE1043-1BC1** ■ - ■■■■	34	0.017
2.2	**2.55**	**132 S**	1180	24.5	IE2	89.5	89.5	87.9	0.7	6	2.6	7.6	3.8	62	70	**1LE1043-1CC1** ■ - ■■■■	52	0.033
3	**3.45**	**132 S**	1180	30	IE2	89.5	89.2	87.5	0.69	7.5	2.8	7.5	3.8	64	72	**1LE1043-1CC0** ■ - ■■■■	52	0.037
4	**4.55**	**132 M**	1180	44.5	IE2	91	90.8	89.2	0.69	11	3	7.8	4	69	77	**1LE1043-1CC2** ■ - ■■■■	61	0.037
5.5	**6.3**	**132 M**	1185	60		91	90.8	89.4	0.8	12.9	2.7	9.3	3.7	75	83	**1LE1043-1CC3** ■ - ■■■■	64	0.046
7.5	**8.6**	**160 M**	1185	89	IE2	91.7	91.7	90.5	0.78	19.3	3.4	8	3.2	73	81	**1LE1043-1DC2** ■ - ■■■■	93	0.098
11	**12.6**	**160 L**	1178	122	IE2	91.7	92	91.4	0.79	26	2.5	6.8	3	61	68	**1LE1043-1DC4** ■ - ■■■■	115	0.12
15	**18**	**180 L**	1180	150	IE2	93	93.8	93.8	0.78	32	2.8	6.5	3	64	71	**1LE1043-1EC4** ■ - ■■■■	130	0.19
18.5	**22**	**200 L**	1180	178	IE1	93	93.5	93.4	0.79	37.5	2.6	6.3	2.8	63	70	**1LE1043-2AC4** ■ - ■■■■	166	0.28
22	**26.5**	**200 L**	1180	178	IE1	93	93,5	93,4	0,79	37,5	2,6	6,3	2,8	63	70	**1LE1043-2AC5** ■ - ■■■■	179	0.32
8-pole: 750 rpm at 50 Hz. 900 rpm at 60 Hz																		
0.12	**0.14**	**71 M**	830	1.38		59.5	56.9	50.3	0.56	0.45	2.6	2.9	2.7	49	56	▲ **1LE1043-0CD3** ■ - ■■■■	9	0.0014
0.09	**0.11**	**80 M**	865	1.99		64	60.6	53	0.44	0.78	2.6	3.5	3.5	55	68	**1LE1043-0CD2** ■ - ■■■■	12	0.0021
0.12	**0.14**	**80 M**	855	2.8		68	65.5	59.8	0.51	0.91	2	3.3	2.6	56	64	**1LE1043-0CD3** ■ - ■■■■	13	0.003
0.18	**0.21**	**90 S**	850	4.15		72	69.9	64.2	0.63	1.02	2	3.4	2.1	54	61	**1LE1043-0DD2** ■ - ■■■■	16	0.0045
0.25	**0.29**	**90 L**	855	6.1		74	71.6	65.8	0.62	1.5	2.3	4	2.8	59	66	**1LE1043-0DD3** ■ - ■■■■	19	0.0045
0.37	**0.43**	**100 L**	870	8.2		75.5	74.9	71.7	0.62	1.87	1.9	4.4	2.5	64	72	**1LE1043-0ED0** ■ - ■■■■	20	0.0096
0.55	**0.63**	**100 L**	865	12.1		78.5	78	75.7	0.62	2.7	2.3	4.8	3	65	73	**1LE1043-0ED4** ■ - ■■■■	26	0.013
0.75	**0.86**	**112 M**	875	16.4	IE2	84	83.1	80	0.59	3.75	2.9	5.8	3.6	65	73	**1LE1043-1AD4** ■ - ■■■■	34	0.028

Voltages		Version					Order code
50 Hz 230 VΔ/400 VY	60 Hz 460 VY	**Standard**	**2**	**2**			–
50 Hz 400 VΔ/690 VY	60 Hz 460 VΔ	**Standard**	**3**	**4**			–
50 Hz 500 VY		Without additional charge	**2**	**7**			–
50 Hz 500 VΔ		Without additional charge	**4**	**0**			–
For other voltages and more information, see from page 3/101			**9**	**0**			...
Types of construction		Version					Order code
Without flange	IM B3 [1]	**Standard**		**A**			–
With flange	IM B5 [1]	With additional charge		**F**			–
With flange	IM B14 [1]	With additional charge		**K**			–
For other types of construction and more information, see from page 3/107				■			...
Motor protection		Version					Order code
Without		**Standard**			**A**		–
PTC thermistor with 1 or 3 temperature sensors (frame sizes 90 or 100 to 200)		With additional charge			**B**		–
For other motor protection and more information, see from page 3/120					■		...
Terminal box position		Version					
Terminal box at top		**Standard**				**4**	
For other terminal box positions and more information, see from page 3/123						■	
Special versions							Order code(s)
Forced-air cooled motors w/o ext. fan/fan cover (IC416)		**1LE1043-....**	■	–	■■■■	-Z	**F90 +...+...+...**
For options and information, see from page 3/126		**1LE1043-....**	■	–	■■■■	-Z	**...+...+...+...**

[1] Types derived from IM B3 (IM B6/7/8, IM V6, and IM V5), from IM B5 (IM V3 and IM V1) and from IM B14 (IM V19 and IM V18) are possible, provided that no requirements exist for condensation drainage holes (**H03**) or stamping of the type on the rating plate. The basic type IM B3, IM B5, or IM B14 is stamped as standard on the rating plate. For orders with condensation drainage holes (**H03**), the type must be specified.

© Innomotics 2024

Selection and ordering data

Technical specifications at 60 Hz/P50 power rating

P_{rated}, 60 Hz/ P50	P_{rated}, 60 Hz/ P60 [1]	Frame size	Operating values at rated power n_{rated}, 60 Hz	T_{rated}, 60 Hz	Different IE class 60 Hz/P60	η_{rated}, 60 Hz, 4/4	η_{rated}, 60 Hz, 3/4	η_{rated}, 60 Hz, 2/4	$\cos\varphi_{rated}$, 60 Hz, 4/4	I_{rated}, 60 Hz, 460 V	T_{LR}/T_{rated}, 60 Hz	I_{LR}/I_{rated}, 60 Hz	T_B/T_{rated}, 60 Hz	L_{pfA}, 60 Hz	L_{WA}, 60 Hz	Aluminum series 1LE1043 Article No.	$m_{IM\ B3}$	J
kW	kW	FS	rpm	Nm		%	%	%		A				dB(A)	dB(A)	▲ New	kg	kgm²
_ Cooling: Self-ventilated (IC411) or with order code F90 forced-air cooled without external fan and fan cover (IC418)																		
_ Efficiency according to IEC 60034-30-1: IE3 Premium Efficiency																		
_ Insulation: Thermal class 155 (temperature class F), IP55 degree of protection, utilization in accordance with thermal class 130 (temperature class B)																		
2-pole: 3000 rpm at 50 Hz, 3600 rpm at 60 Hz																		
0.75	**0.86**	**71 M**	3460	2.05		77	75.9	72.3	0.76	1.61	3.7	7.9	4.3	66	74	▲ **1LE1043-0CA6** ■ - ■■■■	9	0.00058
1.5	**1.75**	**80 M**	3485	4.1		85.5	85.5	83.6	0.83	2.65	4.7	10.1	4.7	76	84	**1LE1043-0DA6** ■ - ■■■■	13	0.0015
3	**3.45**	**90 L**	3530	8.1	IE2	88.5	88.1	86.3	0.83	5.1	4.9	12.4	5.6	76	83	**1LE1043-0EA6** ■ - ■■■■	20	0.00301
4	**4.55**	**100 L**	3530	10		88.5	88	86.4	0.8	6.6	4.5	12.4	5.8	75	83	**1LE1043-1AA6** ■ - ■■■■	26	0.0054
5.5	**6.3**	**112 M**	3560	14.8		89.5	89.3	88.2	0.86	9	3.1	10.4	4.7	76	84	**1LE1043-1BA6** ■ - ■■■■	36	0.00959
11	**12.6**	**132 M**	3550	29.5		91	91.3	90.8	0.88	17.2	3.2	11.7	4.9	73	81	**1LE1043-1CA6** ■ - ■■■■	55	0.023
15	**17.3**	**132 L**	3570	40		91	90.9	90.1	0.83	25	3.4	11.1	5.4	78	86	**1LE1043-1CA7** ■ - ■■■■	65	0.035
22	**25.3**	**160 L**	3555	59		91.7	91.2	89.7	0.9	33.5	3.9	11	5	85	93	**1LE1043-1DA6** ■ - ■■■■	108	0.0603
30	**33.5**	**180 L**	3560	80		92.4	92.6	92.1	0.87	47	2.9	8.8	4.5	77	89	**1LE1043-1EA6** ■ - ■■■■	139	0.094
45	**51**	**200 L**	3560	121		93.6	93.6	92.9	0.86	70	3	8.4	3.7	77	84	**1LE1043-2AA6** ■ - ■■■■	–	0.17
4-pole: 1500 rpm at 50 Hz, 1800 rpm at 60 Hz																		
1.1	**1.27**	**80 M**	1750	6	IE2	86.5	86.4	84.2	0.75	2.15	3.5	8.6	4.4	60	68	**1LE1043-0DB6** ■ - ■■■■	15	0.00329
4	**4.55**	**100 L**	1768	20		89.5	89.5	87.7	0.77	6.7	3.8	9.5	4.8	71	79	**1LE1043-1AB6** ■ - ■■■■	42	0.0149
11	**12.6**	**132 M**	1775	59		92.4	92	91	0.78	19.2	3.1	9.8	4.4	68	76	**1LE1043-1CB6** ■ - ■■■■	81	0.041
18.5	**21.3**	**160 L**	1780	99		93.6	93.5	92.3	0.75	33	3	9	4.2	67	81	**1LE1043-1DB6** ■ - ■■■■	111	0.099
30	**34.5**	**180 L**	1775	161	IE2	94.1	94.2	93.5	0.78	51	3.3	9.5	4.3	78	86	**1LE1043-1EB6** ■ - ■■■■	158	0.173
37	**42.5**	**200 L**	1780	198	IE2	94.5	94.6	94.2	0.8	61	3.3	9	4	70	77	**1LE1043-2AB6** ■ - ■■■■	205	0.275
6-pole: 1000 rpm at 50 Hz, 11200 rpm at 60 Hz																		
18.5	**22**	**180 L**	1180	150	IE2	93	93.2	92.6	0.75	33.5	2.9	7.9	3.7	69	81	**1LE1043-1EC6** ■ - ■■■■	148	0.247
30	**36**	**200 L**	1182	240	IE2	94.1	94.5	94.2	0.77	52	3.2	7.6	3.2	63	70	**1LE1043-2AC6** ■ - ■■■■	220	0.421
8-pole: 750 rpm at 50 Hz, 900 rpm at 60 Hz																		
18,5	**22**	**200 L**	880	200	IE2	90.2	90.2	89	0.69	37.5	3.5	7.7	4.3	66	74	**1LE1043-2AD6** ■ - ■■■■	155	0.256

Voltages		Version					Order code
50 Hz 230 VΔ/400 VY	60 Hz 460 VY	**Standard**	**2**	**2**			–
50 Hz 400 VΔ/690 VY	60 Hz 460 VΔ	**Standard**	**3**	**4**			–
50 Hz 500 VY		Without additional charge	**2**	**7**			–
50 Hz 500 VΔ		Without additional charge	**4**	**0**			–
For other voltages and more information, see from page 3/101			**9**	**0**			...
Types of construction		Version					Order code
Without flange	IM B3 [1]	**Standard**			**A**		–
With flange	IM B5 [1]	With additional charge			**F**		–
With flange	IM B14 [1]	With additional charge			**K**		–
For other types of construction and more information, see from page 3/107					■		...
Motor protection		Version					Order code
Without		**Standard**				**A**	–
PTC thermistor with 3 temperature sensors		With additional charge				**B**	–
For other motor protection and more information, see from page 3/120						■	...
Terminal box position		Version					
Terminal box at top		**Standard**					**4**
For other terminal box positions and more information, see from page 3/123							■
Special versions							Order code(s)
Forced-air cooled motors w/o ext. fan/fan cover (IC416)			**1LE1043-....**	■	–	■■■■	-Z **F90 +...+...+...**
For options and information, see from page 3/126			**1LE1043-....**	■	–	■■■■	-Z **...+...+...+...**

[1] Types derived from IM B3 (IM B6/7/8, IM V6, and IM V5), from IM B5 (IM V3 and IM V1) and from IM B14 (IM V19 and IM V18) are possible, provided that no requirements exist for condensation drainage holes (**H03**) or stamping of the type on the rating plate. The basic type IM B3, IM B5, or IM B14 is stamped as standard on the rating plate. For orders with condensation drainage holes (**H03**), the type must be specified.

© Innomotics 2024

Cast-iron series Innomotics SD 1LE1543 Basic Line – self-ventilated or forced-air cooled

Selection and ordering data

Technical specifications at 60 Hz/P50 power rating

P_{rated}, 60 Hz/P50	P_{rated}, 60 Hz/P60 [1]	Frame size	Operating values at rated power: n_{rated}, 60 Hz	T_{rated}, 60 Hz	Different IE class 60 Hz/P60	η_{rated}, 60 Hz, 4/4	η_{rated}, 60 Hz, 3/4	η_{rated}, 60 Hz, 2/4	$\cos\varphi_{rated}$, 60 Hz, 4/4	I_{rated}, 60 Hz, 460 V	T_{LR}/T_{rated}, 60 Hz	I_{LR}/I_{rated}, 60 Hz	T_B/T_{rated}, 60 Hz	L_{pfA}, 60 Hz	L_{WA}, 60 Hz	Cast-iron series 1LE1543 – *Basic Line* Article No.	$m_{IM\ B3}$	J
kW	kW	FS	rpm	Nm		%	%	%		A				dB(A)	dB(A)		kg	kgm²
_ Cooling: Self-ventilated (IC411) or with order code F90 forced-air cooled without external fan and fan cover (IC418)																		
_ Efficiency according to IEC 60034-30-1: IE3 Premium Efficiency																		
_ Insulation: Thermal class 155 (temperature class F), IP55 degree of protection, utilization in accordance with thermal class 130 (temperature class B)																		
2-pole: 3000 rpm at 50 Hz, 3600 rpm at 60 Hz																		
0.75	**0.86**	**80 M**	3480	2.05		77	77.2	75.7	0.84	1.45	3	7.1	3.6	64	75	**1LE1543-0DA2** ■ - ■■■■	18	0.0011
1.1	**1.27**	**80 M**	3500	3		84	84	82	0.83	1.98	3.3	8.4	4	64	75	**1LE1543-0DA3** ■ - ■■■■	21	0.0013
1.5	**1.75**	**90 S**	3525	4.05		85.5	84.8	82.3	0.84	2.6	3.1	9.8	4.9	69	81	**1LE1543-0EA0** ■ - ■■■■	26	0.0021
2.2	**2.55**	**90 L**	3530	6	IE2	86.5	86.4	84.5	0.87	3.65	3	9.6	4.9	69	81	**1LE1543-0EA4** ■ - ■■■■	32	0.0031
3	**3.45**	**100 L**	3525	8.1		88.5	88.2	86.7	0.85	5	4.6	11.2	5.6	75	83	**1LE1543-1AA4** ■ - ■■■■	37	0.0041
3.7	**4.55**	**112 M**	3555	9.9		88.5	88.4	86.7	0.87	6	3.3	11.8	4.7	80	88	**1LE1543-1BA2** ■ - ■■■■	41	0.0079
5.5	**6.3**	**132 S**	3550	14.8	IE2	89.5	89	87	0.87	8.9	3	11.1	4.6	74	82	**1LE1543-1CA0** ■ - ■■■■	66	0.0168
7.5	**8.6**	**132 S**	3555	20		90.2	90.5	90	0.91	11.5	2.4	9.5	4.7	72	84	**1LE1543-1CA1** ■ - ■■■■	75	0.031
11	**12.6**	**160 M**	3555	29.5		91	90.4	88.4	0.88	17.2	2.9	9.5	4	82	90	**1LE1543-1DA2** ■ - ■■■■	97	0.037
15	**17.3**	**160 M**	3560	40		91	90.4	88.5	0.86	24	4	11.8	5.2	81	89	**1LE1543-1DA3** ■ - ■■■■	104	0.043
18.5	**21.3**	**160 L**	3560	49.5		91.7	91.5	90.3	0.9	28	3.1	9.4	4.4	77	89	**1LE1543-1DA4** ■ - ■■■■	123	0.068
22	**24.5**	**180 M**	3560	59		91.7	91.8	90.9	0.89	34	2.5	9	3.9	77	89	**1LE1543-1EA2** ■ - ■■■■	165	0.08
30	**33.5**	**200 L**	3560	80		92.4	91.9	90.1	0.87	47	3	8.5	3.7	77	84	**1LE1543-2AA4** ■ - ■■■■	220	0.134
37	**41.5**	**200 L**	3560	99		93	92.8	91.6	0.88	57	2.8	7.5	3.6	77	84	**1LE1543-2AA5** ■ - ■■■■	245	0.158
45	**51**	**225 M**	3570	120		93.6	93.7	93.1	0.88	69	2.7	7.6	3.3	75	89	**1LE1543-2BA2** ■ - ■■■■	315	0.26
55	**62**	**250 M**	3578	147		93.6	93.4	92.3	0.89	83	2.5	7.3	3.3	76	90	**1LE1543-2CA2** ■ - ■■■■	385	0.46
75	**84**	**280 S**	3578	200	IE2	94.1	93.9	92.7	0.89	112	2.9	7.6	3.2	78	92	**1LE1543-2DA0** ■ - ■■■■	510	0.77
90	**101**	**280 M**	3578	240	IE2	95	94.8	93.8	0.9	132	2.7	8.1	3.3	78	92	**1LE1543-2DA2** ■ - ■■■■	590	0.94
110	**123**	**315 S**	3585	295		95	94.8	93.8	0.91	160	2.6	8	3.3	79	93	**1LE1543-3AA0** ■ - ■■■■	750	1.39
132	**148**	**315 M**	3585	350		95.4	95.1	94	0.91	191	2.8	8	3.4	79	93	**1LE1543-3AA2** ■ - ■■■■	880	1.6
160	**180**	**315 L**	3588	425	IE2	95.4	95.1	93.9	0.91	230	3.2	8.8	3.5	82	96	**1LE1543-3AA4** ■ - ■■■■	980	1.9
200	**224**	**315 L**	3586	530		95.8	95.7	94.8	0.92	285	3.2	8.3	3.3	82	96	**1LE1543-3AA5** ■ - ■■■■	1150	2.3

Voltages		Version						Order code
50 Hz 230 VΔ/400 VY	60 Hz 460 VY	**Standard**	**2**	**2**				–
50 Hz 400 VΔ/690 VY	60 Hz 460 VΔ	**Standard**	**3**	**4**				–
50 Hz 500 VY		Without additional charge	**2**	**7**				–
50 Hz 500 VΔ		Without additional charge	**4**	**0**				–
For other voltages and more information, see from page 3/104			**9**	**0**				**...**
Types of construction		Version						Order code
Without flange	IM B3 [1]	**Standard**			**A**			–
With flange	IM B5 [1]	With additional charge			**F**			–
For other types of construction and more information, see from page 3/111					■			**...**
Motor protection		Version						Order code
Without		**Standard**				**A**		–
PTC thermistor with 3 temperature sensors		With additional charge				**B**		–
For other motor protection and more information, see from page 3/121						■		**...**
Terminal box position		Version						
Terminal box at top		**Standard**					**4**	
For other terminal box positions and more information, see from page 3/124							■	

Special versions			Order code(s)
Forced-air cooled motors w/o ext. fan/fan cover (IC418)	**1LE1543-....**	■ - ■■■■ -Z	**F90+...+...+...**
For options, see from page 3/132	**1LE1543-....**	■ - ■■■■ -Z	**...+...+...+...**

[1] Types derived from IM B3 (IM B6/7/8, IM V6 and IM V5), from IM B5 (IM V3 and IM V1) and from IM B14 (IM V19 and IM V18) are possible, provided that no requirement exists for stamping of the type on the rating plate. The basic type IM B3, IM B5, or IM B14 is stamped as standard on the rating plate. If mounted in a different position, the position must be specified to ensure that the condensation drainage holes are positioned correctly.

© Innomotics 2024

Selection and ordering data

Technical specifications at 60 Hz/P50 power rating

P_{rated}, 60 Hz/P50	P_{rated}, 60 Hz/P60 [1]	Frame size	Operating values at rated power: n_{rated}, 60 Hz	T_{rated}, 60 Hz	Different IE class 60 Hz/P60	η_{rated}, 60 Hz, 4/4	η_{rated}, 60 Hz, 3/4	η_{rated}, 60 Hz, 2/4	$\cos\varphi_{rated}$, 60 Hz, 4/4	I_{rated}, 60 Hz, 460 V	T_{LR}/T_{rated}, 60 Hz	I_{LR}/I_{rated}, 60 Hz	T_B/T_{rated}, 60 Hz	L_{pfA}, 60 Hz	L_{WA}, 60 Hz	Cast-iron series 1LE1543 – *Basic Line* Article No.	$m_{IM\ B3}$	J
kW	kW	FS	rpm	Nm		%	%	%		A				dB(A)	dB(A)		kg	kgm²
_ Cooling: Self-ventilated (IC411) or with order code F90 forced-air cooled without external fan and fan cover (IC418)																		
_ Efficiency according to IEC 60034-30-1: IE3 Premium Efficiency																		
_ Insulation: Thermal class 155 (temperature class F), IP55 degree of protection, utilization in accordance with thermal class 130 (temperature class B)																		
4-pole: 1500 rpm at 50 Hz, 1800 rpm at 60 Hz																		
0.75	**0.86**	**80 M**	1760	4.05		83.5	82.6	79.7	0.71	1.59	3.1	8.3	4.7	58	66	**1LE1543-0DB3 ■ - ■■■■**	22	0.0029
1.1	**1.27**	**90 S**	1750	6	IE2	86.5	86.4	84.2	0.75	2.15	3.4	8.2	4.4	58	70	**1LE1543-0EB0 ■ - ■■■■**	25	0.0036
1.5	**1.75**	**90 L**	1755	8.2		86.5	86.6	84.7	0.77	2.85	3.4	8.6	4.3	59	67	**1LE1543-0EB4 ■ - ■■■■**	31	0.0049
2.2	**2.55**	**100 L**	1760	11.9		89.5	89.5	88	0.8	3.85	3.5	9.9	4.6	70	78	**1LE1543-1AB4 ■ - ■■■■**	40	0.0101
3	**3.45**	**100 L**	1760	16.3	IE2	89.5	89.4	88	0.78	5.4	3.5	9.9	4.7	70	78	**1LE1543-1AB5 ■ - ■■■■**	40	0.01
4	**4.55**	**112 M**	1770	20		89.5	90	88.3	0.8	6.5	2.9	8.2	4.3	62	74	**1LE1543-1BB2 ■ - ■■■■**	43	0.017
5.5	**6.3**	**132 S**	1775	29.5		91.7	91.6	90.5	0.81	9.3	3.1	10	4.2	68	80	**1LE1543-1CB0 ■ - ■■■■**	67	0.034
7.5	**8.6**	**132 M**	1770	40.5	IE2	91.7	91.6	90.6	0.79	13	3.4	9.8	4.3	68	76	**1LE1543-1CB2 ■ - ■■■■**	80	0.0334
11	**12.6**	**160 M**	1775	59		92.4	92.6	92	0.81	18.4	3.8	9	4	70	78	**1LE1543-1DB2 ■ - ■■■■**	105	0.0583
15	**17.3**	**160 L**	1775	81	IE2	93	92.9	92.1	0.81	25	3.1	8.9	3.8	66	74	**1LE1543-1DB4 ■ - ■■■■**	133	0.089
18.5	**21.3**	**180 M**	1775	100		93.6	93.7	93.1	0.81	30.5	2.7	7.8	3.6	68	75	**1LE1543-1EB2 ■ - ■■■■**	166	0.13
22	**25.3**	**180 L**	1775	118		93.6	93.8	93.3	0.81	36.5	2.8	7.7	3.7	70	77	**1LE1543-1EB4 ■ - ■■■■**	178	0.14
30	**34.5**	**200 L**	1778	161	IE2	94.1	94.2	93.6	0.83	48	2.6	8.8	3.5	70	77	**1LE1543-2AB5 ■ - ■■■■**	240	0.24
37	**42.5**	**225 S**	1782	198	IE2	94.5	94.7	94.2	0.85	58	2.8	7.5	3	68	82	**1LE1543-2BB0 ■ - ■■■■**	285	0.42
45	**52**	**225 M**	1782	240	IE2	95	95.3	95.1	0.85	70	3	7.7	3	67	81	**1LE1543-2BB2 ■ - ■■■■**	340	0.52
55	**63**	**250 M**	1786	295	IE2	95.4	95.6	95.1	0.86	84	2.8	7.6	3.2	68	82	**1LE1543-2CB2 ■ - ■■■■**	420	0.85
75	**86**	**280 S**	1788	400	IE2	95.4	95.3	94.5	0.85	116	2.8	7.7	3.3	77	91	**1LE1543-2DB0 ■ - ■■■■**	570	1.39
90	**104**	**280 M**	1788	480	IE2	95.4	95.5	94.9	0.87	136	2.9	8	3.3	79	93	**1LE1543-2DB2 ■ - ■■■■**	670	1.7
110	**127**	**315 S**	1790	590		95.8	95.9	95.4	0.86	168	3	7.5	3.1	74	88	**1LE1543-3AB0 ■ - ■■■■**	760	2.2
132	**152**	**315 M**	1790	700		96.2	96.3	95.8	0.87	198	3.1	8.2	3.2	78	92	**1LE1543-3AB2 ■ - ■■■■**	960	2.9
160	**184**	**315 L**	1791	850	IE2	96.2	96.2	95.7	0.87	240	3.3	8.4	3.3	78	92	**1LE1543-3AB4 ■ - ■■■■**	990	3.1
200	**230**	**315 L**	1791	1070	IE2	96.2	96.2	95.5	0.87	300	3.5	8.7	3.2	78	93	**1LE1543-3AB5 ■ - ■■■■**	1190	3.7

Voltages		Version					Order code
50 Hz 230 VΔ/400 VY	60 Hz 460 VY	**Standard**	**2**	**2**			–
50 Hz 400 VΔ/690 VY	60 Hz 460 VΔ	**Standard**	**3**	**4**			–
50 Hz 500 VY		Without additional charge	**2**	**7**			–
50 Hz 500 VΔ		Without additional charge	**4**	**0**			–
For other voltages and more information, see from page 3/104			**9**	**0**			**...**
Types of construction		Version					Order code
Without flange	IM B3 [1]	**Standard**		**A**			–
With flange	IM B5 [1]	With additional charge		**F**			–
For other types of construction and more information, see from page 3/111				■			**...**
Motor protection		Version					Order code
Without		**Standard**			**A**		–
PTC thermistor with 3 temperature sensors		With additional charge			**B**		–
For other motor protection and more information, see from page 3/121					■		**...**
Terminal box position		Version					
Terminal box at top		**Standard**				**4**	
For other terminal box positions and more information, see from page 3/124						■	

Special versions		Order code(s)
Forced-air cooled motors w/o ext. fan/fan cover (IC418)	**1LE1543-.... ■ - ■■■■ -Z**	**F90+...+...+...**
For options, see from page 3/132	**1LE1543-.... ■ - ■■■■ -Z**	**...+...+...+...**

[1] Types derived from IM B3 (IM B6/7/8, IM V6 and IM V5), from IM B5 (IM V3 and IM V1) and from IM B14 (IM V19 and IM V18) are possible, provided that no requirement exists for stamping of the type on the rating plate. The basic type IM B3, IM B5, or IM B14 is stamped as standard on the rating plate. If mounted in a different position, the position must be specified to ensure that the condensation drainage holes are positioned correctly.

© Innomotics 2024

Cast-iron series Innomotics SD 1LE1543 Basic Line – self-ventilated or forced-air cooled

Selection and ordering data

Technical specifications at 60 Hz/P50 power rating

P_{rated}, 60 Hz/P50	P_{rated}, 60 Hz/P60 [1]	Frame size	Operating values at rated power: n_{rated}, 60 Hz	T_{rated}, 60 Hz	Different IE class 60 Hz/P60	η_{rated}, 60 Hz, 4/4	η_{rated}, 60 Hz, 3/4	η_{rated}, 60 Hz, 2/4	$\cos\varphi_{rated}$, 60 Hz, 4/4	I_{rated}, 60 Hz, 460 V	T_{LR}/T_{rated}, 60 Hz	I_{LR}/I_{rated}, 60 Hz	T_B/T_{rated}, 60 Hz	L_{pfA}, 60 Hz	L_{WA}, 60 Hz	Cast-iron series 1LE1543 – *Basic Line* Article No.	$m_{IM\ B3}$	J
kW	kW	FS	rpm	Nm		%	%	%		A				dB(A)	dB(A)		kg	kgm²
_ Cooling: Self-ventilated (IC411) or with order code F90 forced-air cooled without external fan and fan cover (IC418)																		
_ Efficiency according to IEC 60034-30-1: IE3 Premium Efficiency																		
_ Insulation: Thermal class 155 (temperature class F), IP55 degree of protection, utilization in accordance with thermal class 130 (temperature class B)																		
6-pole: 1000 rpm at 50 Hz, 1200 rpm at 60 Hz																		
0.75	**0.86**	**90 S**	1155	6.2	IE2	82.5	82.4	79.9	0.65	1.76	2.4	5.3	3.1	46	58	**1LE1543-0EC0** ■ - ■■■■	27	0.004
1.1	**1.27**	**100 L**	1180	8.9	IE2	87.5	87.2	84.8	0.69	2.3	2.4	6.7	3.3	62	74	**1LE1543-1AC3** ■ - ■■■■	25	0.011
1.5	**1.75**	**112 M**	1175	12.2	IE2	88.5	88.3	86.2	0.73	2.9	2.2	6.9	3.2	65	77	**1LE1543-1BC1** ■ - ■■■■	53	0.017
2.2	**2.55**	**132 S**	1180	17.8	IE2	89.5	89.2	87.7	0.72	4.3	2.4	7.3	3.5	63	71	**1LE1543-1CC1** ■ - ■■■■	60	0.033
3	**3.45**	**132 S**	1180	24.5	IE2	89.5	89.5	87.9	0.7	6	2.6	7.6	3.8	62	70	**1LE1543-1CC0** ■ - ■■■■	70	0.037
4	**4.55**	**132 M**	1180	30	IE2	89.5	89.2	87.5	0.69	7.5	2.8	7.5	3.8	64	72	**1LE1543-1CC2** ■ - ■■■■	80	0.037
5.5	**6.3**	**132 M**	1180	44.5	IE2	91	90.8	89.2	0.69	11	3	7.8	4	69	77	**1LE1543-1CC3** ■ - ■■■■	82	0.046
7.5	**8.6**	**160 M**	1185	60		91	90.8	89.4	0.8	12.9	2.7	9.3	3.7	75	83	**1LE1543-1DC2** ■ - ■■■■	122	0.098
11	**12.6**	**160 L**	1185	89	IE2	91.7	91.7	90.5	0.78	19.3	3.4	8	3.2	73	81	**1LE1543-1DC4** ■ - ■■■■	147	0.12
15	**18**	**180 L**	1178	122	IE2	91.7	92	91.4	0.79	26	2.5	6.8	3	61	68	**1LE1543-1EC4** ■ - ■■■■	180	0.19
18.5	**22**	**200 L**	1180	150	IE2	93	93.8	93.8	0.78	32	2.8	6.5	3	64	71	**1LE1543-2AC4** ■ - ■■■■	213	0.28
22	**26.5**	**200 L**	1180	178	IE1	93	93.5	93.4	0.79	37.5	2.6	6.3	2.8	63	70	**1LE1543-2AC5** ■ - ■■■■	230	0.32
37	**44.5**	**250 M**	1188	295	IE2	94.1	94.4	93.9	0.83	59	3.1	8	3.1	63	76	**1LE1543-2CC2** ■ - ■■■■	510	1
45	**54**	**280 S**	1190	360	IE2	94.5	94.6	94.1	0.83	72	3.3	7.7	3.1	66	80	**1LE1543-2DC0** ■ - ■■■■	560	1.4
55	**66**	**280 M**	1190	440	IE2	94.5	94.6	93.9	0.84	87	3.6	9.2	3.3	66	80	**1LE1543-2DC2** ■ - ■■■■	750	1.64
75	**90**	**315 S**	1192	600		95	94.9	94.1	0.82	121	3.1	8.4	3.3	64	79	**1LE1543-3AC0** ■ - ■■■■	890	2.6
90	**108**	**315 M**	1192	720	IE2	95	95	94.4	0.84	142	2.7	7.7	3	64	79	**1LE1543-3AC2** ■ - ■■■■	990	3.1
110	**132**	**315 L**	1192	880	IE2	95.8	95.9	95.5	0.83	174	3.2	8.2	3.4	64	79	**1LE1543-3AC4** ■ - ■■■■	1130	3.9
132	**158**	**315 L**	1193	1060	IE2	95.8	95.9	95.4	0.81	215	3.7	9.6	3.7	65	80	**1LE1543-3AC5** ■ - ■■■■	1260	4.48
8-pole: 750 rpm at 50 Hz, 900 rpm at 60 Hz																		
0.09	**0.11**	**71 M**	825	1.04		57.1	53.7	45.8	0.55	0.36	2.3	2.6	2.4	45	57	**1LE1543-0CD2** ■ - ■■■■	13	0.00098
0.12	**0.14**	**71 M**	830	1.38		59.5	56.9	50.3	0.56	0.45	2.6	2.9	2.7	49	56	**1LE1543-0CD3** ■ - ■■■■	16	0.0014
0.18	**0.21**	**80 M**	865	1.99		64	60.6	53	0.44	0.78	2.6	3.5	3.5	55	68	**1LE1543-0DD2** ■ - ■■■■	18	0.0021
0.25	**0.29**	**80 M**	855	2.8		68	65.5	59.8	0.51	0.91	2	3.3	2.6	56	64	**1LE1543-0DD3** ■ - ■■■■	22	0.003
0.37	**0.43**	**90 S**	850	4.15		72	69.9	64.2	0.63	1.02	2	3.4	2.1	54	61	**1LE1543-0ED0** ■ - ■■■■	26	0.0045
0.55	**0.63**	**90 L**	855	6.1		74	71.6	65.8	0.62	1.5	2.3	4	2.8	59	66	**1LE1543-0ED4** ■ - ■■■■	26	0.0045
0.75	**0.86**	**100 L**	870	8.2		75.5	74.9	71.7	0.62	1.87	1.9	4.4	2.5	64	72	**1LE1543-1AD4** ■ - ■■■■	31	0.0096
1.1	**1.27**	**100 L**	865	12.1		78.5	78	75.7	0.62	2.7	2.3	4.8	3	65	73	**1LE1543-1AD5** ■ - ■■■■	36	0.013
1.5	**1.75**	**112 M**	875	16.4	IE2	84	83.1	80	0.59	3.75	2.9	5.8	3.6	65	73	**1LE1543-1BD2** ■ - ■■■■	46	0.028

Voltages		Version					Order code
50 Hz 230 VΔ/400 VY	60 Hz 460 VY	**Standard**	**2**	**2**			–
50 Hz 400 VΔ/690 VY	60 Hz 460 VΔ	**Standard**	**3**	**4**			–
50 Hz 500 VY		Without additional charge	**2**	**7**			–
50 Hz 500 VΔ		Without additional charge	**4**	**0**			–
For other voltages and more information, see from page 3/104			**9**	**0**			**...**
Types of construction		Version					Order code
Without flange	IM B3 [1]	**Standard**		**A**			–
With flange	IM B5 [1]	With additional charge		**F**			–
For other types of construction and more information, see from page 3/111				■			**...**
Motor protection		Version					Order code
Without		**Standard**			**A**		–
PTC thermistor with 3 temperature sensors		With additional charge			**B**		–
For other motor protection and more information, see from page 3/121					■		**...**
Terminal box position		Version					
Terminal box at top		**Standard**				**4**	
For other terminal box positions and more information, see from page 3/124						■	
Special versions							Order code(s)
Forced-air cooled motors w/o ext. fan/fan cover (IC418)		**1LE1543-....** ■ - ■■■■ -Z					**F90+...+...+...**
For options, see from page 3/132		**1LE1543-....** ■ - ■■■■ -Z					**...+...+...+...**

[1] Types derived from IM B3 (IM B6/7/8, IM V6 and IM V5), from IM B5 (IM V3 and IM V1) and from IM B14 (IM V19 and IM V18) are possible, provided that no requirement exists for stamping of the type on the rating plate. The basic type IM B3, IM B5, or IM B14 is stamped as standard on the rating plate. If mounted in a different position, the position must be specified to ensure that the condensation drainage holes are positioned correctly.

© Innomotics 2024

Selection and ordering data

Technical specifications at 60 Hz/P50 power rating

P_{rated}, 60 Hz/P50	P_{rated}, 60 Hz/P60 [1]	Frame size	Operating values at rated power n_{rated}, 60 Hz	T_{rated}, 60 Hz	Different IE class 60 Hz/P60	η_{rated}, 60 Hz, 4/4	η_{rated}, 60 Hz, 3/4	η_{rated}, 60 Hz, 2/4	$\cos\varphi_{rated}$, 60 Hz, 4/4	I_{rated}, 60 Hz, 460 V	T_{LR}/T_{rated}, 60 Hz	I_{LR}/I_{rated}, 60 Hz	T_B/T_{rated}, 60 Hz	L_{pfA}, 60 Hz	L_{WA}, 60 Hz	Cast-iron series 1LE1643 – *Performance Line* Article No.	$m_{IM\ B3}$	J
kW	kW	FS	rpm	Nm		%	%	%		A				dB(A)	dB(A)		kg	kgm²
_ Cooling: Self-ventilated (IC411) or with order code F90 forced-air cooled without external fan and fan cover (IC418)																		
_ Efficiency according to IEC 60034-30-1: IE3 Premium Efficiency																		
_ Insulation: Thermal class 155 (temperature class F), IP55 degree of protection, utilization in accordance with thermal class 130 (temperature class B)																		
2-pole: 3000 rpm at 50 Hz, 3600 rpm at 60 Hz																		
3	**3.45**	**100 L**	3525	8.1		88.5	88.2	86.7	0.85	5	4.6	11.2	5.6	75	83	**1LE1643-1AA4** ■ - ■■■■	37	0.0041
3.7	**4.55**	**112 M**	3555	9.9		88.5	88.4	86.65	0.87	6	3.3	11.8	4.7	80	88	**1LE1643-1BA2** ■ - ■■■■	41	0.0079
5.5	**6.3**	**132 S**	3550	14.8		89.5	89	87	0.87	8.9	3	11.1	4.6	74	82	**1LE1643-1CA0** ■ - ■■■■	66	0.0168
7.5	**8.6**	**132 S**	3555	20		90.2	90.5	90	0.91	11.5	2.4	9.5	4.7	72	84	**1LE1643-1CA1** ■ - ■■■■	75	0.031
11	**12.6**	**160 M**	3560	29.5		91	90.4	88.3	0.88	17.2	2.8	8.5	4.3	77	89	**1LE1643-1DA2** ■ - ■■■■	102	0.053
15	**17.3**	**160 M**	3560	40		91	90.4	88.5	0.86	24	4	11.8	5.2	81	89	**1LE1643-1DA3** ■ - ■■■■	104	0.043
18.5	**21.3**	**160 L**	3560	49.5		91.7	91.5	90.3	0.9	28	3.1	9.4	4.4	77	89	**1LE1643-1DA4** ■ - ■■■■	123	0.068
22	**24.5**	**180 M**	3560	59		91.7	91.4	90	0.89	34	2.8	8.2	3.9	77	89	**1LE1643-1EA2** ■ - ■■■■	165	0.08
30	**33.5**	**200 L**	3560	80		92.4	92.2	91.4	0.87	47	2.9	7.6	3.6	77	84	**1LE1643-2AA4** ■ - ■■■■	220	0.134
37	**41.5**	**200 L**	3560	99		93	92.8	91.6	0.88	57	2.8	7.5	3.6	77	84	**1LE1643-2AA5** ■ - ■■■■	245	0.158
45	**51**	**225 M**	3570	120		93.6	93.7	93.1	0.88	69	2.7	7.6	3.3	75	89	**1LE1643-2BA2** ■ - ■■■■	315	0.26
55	**62**	**250 M**	3578	147		93.6	93.4	92.3	0.89	83	2.5	7.3	3.3	76	90	**1LE1643-2CA2** ■ - ■■■■	385	0.46
75	**84**	**280 S**	3578	200	IE2	94.1	93.9	92.7	0.89	112	2.7	7.6	3.2	78	92	**1LE1643-2DA0** ■ - ■■■■	510	0.77
90	**101**	**280 M**	3578	240	IE2	95	94.8	93.8	0.9	132	2.7	8.1	3.3	78	92	**1LE1643-2DA2** ■ - ■■■■	590	0.94
110	**123**	**315 S**	3585	295		95	94.8	93.8	0.91	160	2.6	8	3.3	79	93	**1LE1643-3AA0** ■ - ■■■■	750	1.39
132	**148**	**315 M**	3585	350		95.4	95.1	94	0.91	191	2.8	8	3.4	79	93	**1LE1643-3AA2** ■ - ■■■■	880	1.6
160	**180**	**315 L**	3588	425	IE2	95.4	95.1	93.9	0.91	230	3.2	8.8	3.5	82	96	**1LE1643-3AA4** ■ - ■■■■	980	1.9
200	**224**	**315 L**	3586	530		95.8	95.7	94.8	0.92	285	3.2	8.3	3.3	82	96	**1LE1643-3AA5** ■ - ■■■■	1150	2.3

Voltages		Version					Order code
50 Hz 230 VΔ/400 VY	60 Hz 460 VY	**Standard**	**2**	**2**			–
50 Hz 400 VΔ/690 VY	60 Hz 460 VΔ	**Standard**	**3**	**4**			–
50 Hz 500 VY		Without additional charge	**2**	**7**			–
50 Hz 500 VΔ		Without additional charge	**4**	**0**			–
For other voltages and more information, see from page 3/104			**9**	**0**			**...**
Types of construction		Version					Order code
Without flange	IM B3 [1]	**Standard**		**A**			–
With flange	IM B5 [1]	With additional charge		**F**			–
For other types of construction and more information, see from page 3/111				■			**...**
Motor protection		Version					Order code
PTC thermistor with 3 temperature sensors		**Standard**			**B**		–
For other motor protection and more information, see from page 3/121					■		**...**
Terminal box position		Version					
Terminal box at top		**Standard**				**4**	
For other terminal box positions and more information, see from page 3/124						■	
Special versions							Order code(s)
Forced-air cooled motors w/o ext. fan/fan cover (IC418)		**1LE1643-....** ■ - ■■■■ -Z					**F90+...+...+...**
For options, see from page 3/132		**1LE1643-....** ■ - ■■■■ -Z					**...+...+...+...**

[1] Types derived from IM B3 (IM B6/7/8, IM V6 and IM V5), from IM B5 (IM V3 and IM V1) and from IM B14 (IM V19 and IM V18) are possible, provided that no requirement exists for stamping of the type on the rating plate. The basic type IM B3, IM B5, or IM B14 is stamped as standard on the rating plate. If mounted in a different position, the position must be specified to ensure that the condensation drainage holes are positioned correctly.

© Innomotics 2024

Cast-iron series Innomotics SD 1LE1643 Performance Line – self-ventilated or forced-air cooled

Selection and ordering data

Technical specifications at 60 Hz/P50 power rating

P_{rated}, 60 Hz/P50	P_{rated}, 60 Hz/P60 [1]	Frame size	Operating values at rated power: n_{rated}, 60 Hz	T_{rated}, 60 Hz	Different IE class 60 Hz/P60	η_{rated}, 60 Hz, 4/4	η_{rated}, 60 Hz, 3/4	η_{rated}, 60 Hz, 2/4	$\cos\varphi_{rated}$, 60 Hz, 4/4	I_{rated}, 60 Hz, 460 V	T_{LR}/T_{rated}, 60 Hz	I_{LR}/I_{rated}, 60 Hz	T_B/T_{rated}, 60 Hz	L_{pfA}, 60 Hz	L_{WA}, 60 Hz	Cast-iron series 1LE1643 – *Performance Line* Article No.		$m_{IM\ B3}$	J
kW	kW	FS	rpm	Nm		%	%	%		A				dB(A)	dB(A)			kg	kgm^2
_ Cooling: Self-ventilated (IC411) or with order code F90 forced-air cooled without external fan and fan cover (IC418)																			
_ Efficiency according to IEC 60034-30-1: IE3 Premium Efficiency																			
_ Insulation: Thermal class 155 (temperature class F), IP55 degree of protection, utilization in accordance with thermal class 130 (temperature class B)																			
4-pole: 1500 rpm at 50 Hz, 1800 rpm at 60 Hz																			
2,2	**2,55**	**100 L**	1760	11,9		89,5	89,5	88	0,8	3,85	3,5	9,9	4,6	70	78	**1LE1643-1AB4**	■ - ■■■■	40	0,0101
3	**3.45**	**100 L**	1760	16.3		89.5	89.4	88	0.78	5.4	3.5	9.9	4.7	70	78	**1LE1643-1AB5**	■ - ■■■■	40	0.01
4	**4.55**	**112 M**	1770	20		89.5	89.4	87.7	0.8	6.5	2.9	8.2	4.3	62	74	**1LE1643-1BB2**	■ - ■■■■	43	0.017
5.5	**6.3**	**132 S**	1775	29.5		91.7	91.6	90.5	0.81	9.3	3.1	10	4.2	68	80	**1LE1643-1CB0**	■ - ■■■■	67	0.034
7.5	**8.6**	**132 M**	1770	40.5		91.7	91.6	90.6	0.79	13	3.4	9.8	4.3	68	76	**1LE1643-1CB2**	■ - ■■■■	80	0.0334
11	**12.6**	**160 M**	1775	59		92.4	92.6	92	0.81	18.4	3.8	9	4	70	78	**1LE1643-1DB2**	■ - ■■■■	105	0.0583
15	**17.3**	**160 L**	1775	81	IE2	93	92.9	92.1	0.81	25	3.1	8.9	3.8	66	74	**1LE1643-1DB4**	■ - ■■■■	133	0.089
18.5	**21.3**	**180 M**	1775	100		93.6	93.7	93.1	0.81	30.5	2.7	7.8	3.6	68	75	**1LE1643-1EB2**	■ - ■■■■	166	0.13
22	**25.3**	**180 L**	1775	118		93.6	93.8	93.3	0.81	36.5	2.8	7.7	3.7	70	77	**1LE1643-1EB4**	■ - ■■■■	178	0.14
30	**34.5**	**200 L**	1778	161	IE2	94.1	94.3	93.8	0.83	48	3	8.1	3.5	70	77	**1LE1643-2AB5**	■ - ■■■■	240	0.24
37	**42.5**	**225 S**	1782	198	IE2	94.5	94.7	94.2	0.85	58	2.8	7.5	3	68	82	**1LE1643-2BB0**	■ - ■■■■	285	0.42
45	**52**	**225 M**	1782	240	IE2	95	95.3	95.1	0.85	70	3	7.7	3	67	81	**1LE1643-2BB2**	■ - ■■■■	340	0.52
55	**63**	**250 M**	1786	295	IE2	95.4	95.6	95.1	0.86	84	2.8	7.6	3.2	68	82	**1LE1643-2CB2**	■ - ■■■■	420	0.85
75	**86**	**280 S**	1788	400	IE2	95.4	95.3	94.5	0.85	116	2.8	7.7	3.3	77	91	**1LE1643-2DB0**	■ - ■■■■	570	1.39
90	**104**	**280 M**	1788	480	IE2	95.4	95.5	94.9	0.87	136	2.9	8	3.3	79	93	**1LE1643-2DB2**	■ - ■■■■	670	1.7
110	**127**	**315 S**	1790	590		95.8	95.9	95.4	0.86	168	3	7.5	3.1	74	88	**1LE1643-3AB0**	■ - ■■■■	760	2.2
132	**152**	**315 M**	1790	700		96.2	96.3	95.8	0.87	198	3.1	8.2	3.2	78	92	**1LE1643-3AB2**	■ - ■■■■	960	2.9
160	**184**	**315 L**	1791	850		96.2	96.2	95.7	0.87	240	3.3	8.4	3.3	78	92	**1LE1643-3AB4**	■ - ■■■■	990	3.1
200	**230**	**315 L**	1791	1070	IE2	96.2	96.2	95.5	0.87	300	3.5	8.7	3.2	78	93	**1LE1643-3AB5**	■ - ■■■■	1190	3.7

Voltages		Version					Order code
50 Hz 230 VΔ/400 VY	60 Hz 460 VY	**Standard**	**2**	**2**			–
50 Hz 400 VΔ/690 VY	60 Hz 460 VΔ	**Standard**	**3**	**4**			–
50 Hz 500 VY		Without additional charge	**2**	**7**			–
50 Hz 500 VΔ		Without additional charge	**4**	**0**			–
For other voltages and more information, see from page 3/104			**9**	**0**			**...**
Types of construction		Version					Order code
Without flange	IM B3 [1]	**Standard**		**A**			–
With flange	IM B5 [1]	With additional charge		**F**			–
For other types of construction and more information, see from page 3/111				■			**...**
Motor protection		Version					Order code
PTC thermistor with 3 temperature sensors		**Standard**			**B**		–
For other motor protection and more information, see from page 3/121					■		**...**
Terminal box position		Version					
Terminal box at top		**Standard**				**4**	
For other terminal box positions and more information, see from page 3/124						■	
Special versions							Order code(s)
Forced-air cooled motors w/o ext. fan/fan cover (IC418)		**1LE1643-....**	■ - ■■■■			-Z	**F90+...+...+...**
For options, see from page 3/132		**1LE1643-....**	■ - ■■■■			-Z	**...+...+...+...**

[1] Types derived from IM B3 (IM B6/7/8, IM V6 and IM V5), from IM B5 (IM V3 and IM V1) and from IM B14 (IM V19 and IM V18) are possible, provided that no requirement exists for stamping of the type on the rating plate. The basic type IM B3, IM B5, or IM B14 is stamped as standard on the rating plate. If mounted in a different position, the position must be specified to ensure that the condensation drainage holes are positioned correctly.

© Innomotics 2024

Selection and ordering data

Technical specifications at 60 Hz/P50 power rating

P_{rated}, 60 Hz/P50	P_{rated}, 60 Hz/P60 [1]	Frame size	Operating values at rated power n_{rated}, 60 Hz	T_{rated}, 60 Hz	Different IE class 60 Hz/P60	η_{rated}, 60 Hz, 4/4	η_{rated}, 60 Hz, 3/4	η_{rated}, 60 Hz, 2/4	$\cos\varphi_{rated}$, 60 Hz, 4/4	I_{rated}, 60 Hz, 460 V	T_{LR}/T_{rated}, 60 Hz	I_{LR}/I_{rated}, 60 Hz	T_B/T_{rated}, 60 Hz	L_{pfA}, 60 Hz	L_{WA}, 60 Hz	Cast-iron series 1LE1643 – *Performance Line* Article No.	$m_{IM\ B3}$	J
kW	kW	FS	rpm	Nm		%	%	%		A				dB(A)	dB(A) ▲	New	kg	kgm²
_ Cooling: Self-ventilated (IC411) or with order code F90 forced-air cooled without external fan and fan cover (IC418)																		
_ Efficiency according to IEC 60034-30-1: IE3 Premium Efficiency																		
_ Insulation: Thermal class 155 (temperature class F), IP55 degree of protection, utilization in accordance with thermal class 130 (temperature class B)																		
6-pole: 1000 rpm at 50 Hz, 1200 rpm at 60 Hz																		
1.1	**1.27**	**100 L**	1180	8.9	IE2	87.5	87.2	84.8	0.69	2.3	2.4	6.7	3.3	62	74	**1LE1643-1AC3** ■ - ■■■■	25	0.011
1.5	**1.75**	**112 M**	1175	12.2	IE2	88.5	88.3	86.2	0.73	2.9	2.2	6.9	3.2	65	77	**1LE1643-1BC1** ■ - ■■■■	53	0.017
2.2	**2.55**	**132 S**	1180	17.8	IE2	89.5	89.2	87.7	0.72	4.3	2.4	7.3	3.5	63	71	**1LE1643-1CC1** ■ - ■■■■	60	0.033
3	**3.45**	**132 S**	1180	24.5	IE2	89.5	89.5	87.9	0.7	6	2.6	7.6	3.8	62	70	**1LE1643-1CC0** ■ - ■■■■	70	0.037
4	**4.55**	**132 M**	1180	30	IE2	89.5	89.2	87.5	0.69	7.5	2.8	7.5	3.8	64	72	**1LE1643-1CC2** ■ - ■■■■	80	0.037
5.5	**6.3**	**132 M**	1180	44.5	IE2	91	90.8	89.2	0.69	11	3	7.8	4	69	77	**1LE1643-1CC3** ■ - ■■■■	82	0.046
7.5	**8.6**	**160 M**	1185	60	IE3	91	90.8	89.4	0.8	12.9	2.7	9.3	3.7	75	83	**1LE1643-1DC2** ■ - ■■■■	122	0.098
11	**12.6**	**160 L**	1185	89	IE2	91.7	91.7	90.5	0.78	19.3	3.4	8	3.2	73	81	**1LE1643-1DC4** ■ - ■■■■	147	0.12
15	**18**	**180 L**	1178	122	IE2	91.7	92	91.4	0.79	26	2.5	6.8	3	61	68	**1LE1643-1EC4** ■ - ■■■■	180	0.19
18.5	**22**	**200 L**	1180	150	IE2	93	93.8	93.8	0.78	32	2.8	6.5	3	64	71	**1LE1643-2AC4** ■ - ■■■■	213	0.28
22	**26.5**	**200 L**	1180	178	IE1	93	93.5	93.4	0.79	37.5	2.6	6.3	2.8	63	70	**1LE1643-2AC5** ■ - ■■■■	230	0.32
37	**44.5**	**250 M**	1188	295	IE2	94.1	94.4	93.9	0.83	59	3.1	8	3.1	63	76	**1LE1643-2CC2** ■ - ■■■■	405	1
45	**54**	**280 S**	1190	360	IE2	94.5	94.6	94.1	0.83	72	3.3	7.7	3.1	66	80	**1LE1643-2DC0** ■ - ■■■■	510	1.4
55	**66**	**280 M**	1190	440	IE2	94.5	94.6	93.9	0.84	87	3.6	9.2	3.3	66	80	**1LE1643-2DC2** ■ - ■■■■	560	1.64
75	**90**	**315 S**	1192	600	IE3	95	94.9	94.1	0.82	121	3.1	8.4	3.3	64	79	**1LE1643-3AC0** ■ - ■■■■	750	2.6
90	**108**	**315 M**	1192	720	IE2	95	95	94.4	0.84	142	2.7	7.7	3	64	79	**1LE1643-3AC2** ■ - ■■■■	890	3.1
110	**132**	**315 L**	1192	880	IE2	95.8	95.9	95.5	0.83	174	3.2	8.2	3.4	64	79	**1LE1643-3AC4** ■ - ■■■■	990	3.9
132	**158**	**315 L**	1193	1060	IE2	95.8	95.9	95.4	0.81	215	3.7	9.6	3.7	65	80	**1LE1643-3AC5** ■ - ■■■■	1130	4.48
8-pole: 750 rpm at 50 Hz, 900 rpm at 60 Hz																		
0.75	**0,86**	**100 L**	870	8.2		75.5	74.9	71.7	0.62	1.87	1.9	4.4	2.5	64	72	**1LE1643-1AD4** ■ - ■■■■	31	0.0096
1.1	**1,27**	**100 L**	865	12.1		78.5	78	75.7	0.62	2.7	2.3	4.8	3	65.4	73.4	**1LE1643-1AD5** ■ - ■■■■	36	0.013
1.5	**1,75**	**112 M**	875	16.4	IE2	84	83.1	80	0.59	3.75	2.9	5.8	3.6	65	73	**1LE1643-1BD2** ■ - ■■■■	46	0.028

Voltages		Version						Order code
50 Hz 230 VΔ/400 VY	60 Hz 460 VY	**Standard**	**2**	**2**				–
50 Hz 400 VΔ/690 VY	60 Hz 460 VΔ	**Standard**	**3**	**4**				–
50 Hz 500 VY		Without additional charge	**2**	**7**				–
50 Hz 500 VΔ		Without additional charge	**4**	**0**				–
For other voltages and more information, see from page 3/104			**9**	**0**				**...**
Types of construction		Version						Order code
Without flange	IM B3 [1]	**Standard**			**A**			–
With flange	IM B5 [1]	With additional charge			**F**			–
For other types of construction and more information, see from page 3/111					■			**...**
Motor protection		Version						Order code
PTC thermistor with 3 temperature sensors		**Standard**				**B**		–
For other motor protection and more information, see from page 3/121						■		**...**
Terminal box position		Version						
Terminal box at top		**Standard**					**4**	
For other terminal box positions and more information, see from page 3/124							■	

Special versions			Order code(s)
Forced-air cooled motors w/o ext. fan/fan cover (IC418)	**1LE1643-....**	■ - ■■■■ -Z	**F90+...+...+...**
For options, see from page 3/132	**1LE1643-....**	■ - ■■■■ -Z	**...+...+...+...**

[1] Types derived from IM B3 (IM B6/7/8, IM V6 and IM V5), from IM B5 (IM V3 and IM V1) and from IM B14 (IM V19 and IM V18) are possible, provided that no requirement exists for stamping of the type on the rating plate. The basic type IM B3, IM B5, or IM B14 is stamped as standard on the rating plate. If mounted in a different position, the position must be specified to ensure that the condensation drainage holes are positioned correctly.

© Innomotics 2024

Cast-iron series Innomotics SD 1LE1543 Basic Line with increased power – self-ventilated

Selection and ordering data

Technical specifications at 60 Hz/P50 power rating

P_{rated}, 60 Hz/P50	P_{rated}, 60 Hz/P60 [1]	Frame size	Operating values at rated power: n_{rated}, 60 Hz	T_{rated}, 60 Hz	Different IE class 60 Hz/P60	η_{rated}, 60 Hz, 4/4	η_{rated}, 60 Hz, 3/4	η_{rated}, 60 Hz, 2/4	$\cos\varphi_{rated}$, 60 Hz, 4/4	I_{rated}, 60 Hz, 460 V	T_{LR}/T_{rated}, 60 Hz	I_{LR}/I_{rated}, 60 Hz	T_B/T_{rated}, 60 Hz	L_{pfA}, 60 Hz	L_{WA}, 60 Hz	Cast-iron series 1LE1543 – *Basic Line* Article No.	$m_{IM\ B3}$	J
kW	kW	FS	rpm	Nm		%	%	%		A				dB(A)	dB(A)		kg	kgm²
_ Cooling: Self-ventilated (IC411) or with order code F90 forced-air cooled without external fan and fan cover (IC418)																		
_ Efficiency according to IEC 60034-30-1: IE3 Premium Efficiency																		
_ Insulation: Thermal class 155 (temperature class F), IP55 degree of protection, utilization in accordance with thermal class 130 (temperature class B)																		
2-pole: 3000 rpm at 50 Hz, 3600 rpm at 60 Hz																		
1.5	**1.75**	**80 M**	3485	4.1		85.5	85.5	83.6	0.83	2.65	4.7	10.1	4.7	76	84	**1LE1543-0DA6** ■ - ■■■■	22	0.0015
3	**3.45**	**90 L**	3530	8.1	IE2	88.5	88.1	86.3	0.83	5.1	4.9	12.4	5.6	76	83	**1LE1543-0EA6** ■ - ■■■■	31	0.00301
4	**4.55**	**100 L**	3530	10		88.5	88	86.4	0.8	6.6	4.5	12.4	5.8	75	83	**1LE1543-1AA6** ■ - ■■■■	34	0.0054
5.5	**6.3**	**112 M**	3560	14.8		89.5	89.3	88.2	0.86	9	3.1	10.4	4.7	76	84	**1LE1543-1BA6** ■ - ■■■■	43	0.00959
11	**12.6**	**132 M**	3550	29.5		91	91.3	90.8	0.88	17.2	3.2	11.7	4.9	73	81	**1LE1543-1CA6** ■ - ■■■■	78	0.023
15	**17.3**	**132 M**	3570	40		91	90.9	90.1	0.83	25	3.4	11.1	5.4	78	86	**1LE1543-1CA7** ■ - ■■■■	85	0.035
22	**25.3**	**160 L**	3555	59		91.7	91.2	89.7	0.9	33.5	3.9	11	5	85	93	**1LE1543-1DA6** ■ - ■■■■	137	0.0603
30	**33.5**	**180 L**	3560	80		92.4	92.6	92.1	0.87	47	2.9	8.8	4.5	77	89	**1LE1543-1EA6** ■ - ■■■■	175	0.094
45	**51**	**200 L**	3560	121		93.6	93.6	92.9	0.86	70	3	8.4	3.7	77	84	**1LE1543-2AA6** ■ - ■■■■	245	0.17
55	**62**	**225 M**	3570	147		93.6	93.6	92.8	0.88	84	3.2	8.9	4	75	88	**1LE1543-2BA6** ■ - ■■■■	370	0.31
75	**84**	**250 M**	3575	200	IE2	94.1	93.9	92.9	0.9	111	2.5	7.5	3.2	81	95	**1LE1543-2CA6** ■ - ■■■■	455	0.56
110	**123**	**280 M**	3578	295		95	94.8	94	0.91	160	2.9	8.5	3.5	81	95	**1LE1543-2DA6** ■ - ■■■■	670	1.1
4-pole: 1500 rpm at 50 Hz, 1800 rpm at 60 Hz																		
1.1	**1.27**	**80 M**	1750	6	IE2	86.5	86.4	84.2	0.75	2.15	3.5	8.6	4.4	60	68	**1LE1543-0DB6** ■ - ■■■■	24	0.00329
4	**4.55**	**100 L**	1768	20		89.5	89.5	87.7	0.77	6.7	3.8	9.5	4.8	71	79	**1LE1543-1AB6** ■ - ■■■■	53	0.0149
11	**12.6**	**132 M**	1775	59	IE2	92.4	92	91	0.78	19.2	3.1	9.8	4.4	68	76	**1LE1543-1CB6** ■ - ■■■■	99	0.041
18.5	**21.3**	**160 L**	1780	99		93.6	93.5	92.3	0.75	33	3	9	4.2	67	81	**1LE1543-1DB6** ■ - ■■■■	126	0.099
30	**34.5**	**180 L**	1775	161	IE2	94.1	94.2	93.5	0.78	51	3.3	9.5	4.3	78	86	**1LE1543-1EB6** ■ - ■■■■	191	0.173
37	**42.5**	**200 L**	1780	198	IE2	94.5	94.6	94.2	0.8	61	3.3	9	4	70	77	**1LE1543-2AB6** ■ - ■■■■	258	0.275
55	**63**	**225 M**	1782	295	IE2	95.4	95.7	95.4	0.85	85	3.1	7.4	3	74	88	**1LE1543-2BB6** ■ - ■■■■	405	0.65
75	**86**	**250 M**	1788	400		95.4	95.4	94.8	0.84	117	3.4	8.8	3.8	74	88	**1LE1543-2CB6** ■ - ■■■■	510	1.1
110	**127**	**280 M**	1788	590	IE2	95.8	95.7	94.9	0.85	170	3.4	9.2	3.7	81	95	**1LE1543-2DB6** ■ - ■■■■	710	1.8

Voltages		Version					Order code
50 Hz 230 VΔ/400 VY	60 Hz 460 VY	**Standard**	**2**	**2**			–
50 Hz 400 VΔ/690 VY	60 Hz 460 VΔ	**Standard**	**3**	**4**			–
50 Hz 500 VY		Without additional charge	**2**	**7**			–
50 Hz 500 VΔ		Without additional charge	**4**	**0**			–
For other voltages and more information, see from page 3/104			**9**	**0**			**...**
Types of construction		Version					Order code
Without flange	IM B3 [1]	**Standard**		**A**			–
With flange	IM B5 [1]	With additional charge		**F**			–
For other types of construction and more information, see from page 3/111				■			**...**
Motor protection		Version					Order code
Without		**Standard**			**A**		–
PTC thermistor with 3 temperature sensors		With additional charge			**B**		–
For other motor protection and more information, see from page 3/121					■		**...**
Terminal box position		Version					
Terminal box at top		**Standard**				**4**	
For other terminal box positions and more information, see from page 3/124						■	
Special versions							Order code(s)
For options, see from page 3/132		**1LE1543-....** ■ - ■■■■ -Z					...+...+...+...

[1] Types derived from IM B3 (IM B6/7/8, IM V6 and IM V5), from IM B5 (IM V3 and IM V1) and from IM B14 (IM V19 and IM V18) are possible, provided that no requirement exists for stamping of the type on the rating plate. The basic type IM B3, IM B5, or IM B14 is stamped as standard on the rating plate. If mounted in a different position, the position must be specified to ensure that the condensation drainage holes are positioned correctly.

© Innomotics 2024

Selection and ordering data

Technical specifications at 60 Hz/P50 power rating

P_{rated}, 60 Hz/P50	P_{rated}, 60 Hz/P60 [1]	Frame size	Operating values at rated power n_{rated}, 60 Hz	T_{rated}, 60 Hz	Different IE class 60 Hz/P60	η_{rated}, 60 Hz, 4/4	η_{rated}, 60 Hz, 3/4	η_{rated}, 60 Hz, 2/4	$\cos\varphi_{rated}$, 60 Hz, 4/4	I_{rated}, 60 Hz, 460 V	T_{LR}/T_{rated}, 60 Hz	I_{LR}/I_{rated}, 60 Hz	T_B/T_{rated}, 60 Hz	L_{pfA}, 60 Hz	L_{WA}, 60 Hz	Cast-iron series 1LE1543 – *Basic Line* Article No.	$m_{IM\ B3}$	J
kW	kW	FS	rpm	Nm		%	%	%		A				dB(A)	dB(A)		kg	kgm²
_ Cooling: Self-ventilated (IC411) or with order code F90 forced-air cooled without external fan and fan cover (IC418)																		
_ Efficiency according to IEC 60034-30-1: IE3 Premium Efficiency																		
_ Insulation: Thermal class 155 (temperature class F), IP55 degree of protection, utilization in accordance with thermal class 130 (temperature class B)																		
6-pole: 1000 rpm at 50 Hz, 1200 rpm at 60 Hz																		
18.5	**22**	**180 L**	1180	150	IE2	93	93.2	92.6	0.75	33.5	2.9	7.9	3.7	69	81	**1LE1543-1EC6** ■ - ■■■■	185	0.247
30	**36**	**200 L**	1182	240	IE2	94.1	94.5	94.2	0.77	52	3.2	7.6	3.2	63	70	**1LE1543-2AC6** ■ - ■■■■	264	0.421
37	**44.5**	**225 M**	1186	300	IE2	94.1	94.3	93.7	0.8	62	3.3	8.2	3.5	70	84	**1LE1543-2BC6** ■ - ■■■■	395	0.84
45	**54**	**250 M**	1188	360	IE2	94.5	94.7	94.2	0.83	72	2.8	8.1	3.2	69	83	**1LE1543-2CC6** ■ - ■■■■	480	1.3
75	**90**	**280 M**	1190	600		95	95.1	94.6	0.82	121	4.2	9.5	3.6	70	84	**1LE1543-2DC6** ■ - ■■■■	630	1.9
160	**192**	**315 L**	1193	1280	IE2	95.8	95.8	95.2	0.81	260	4	9.8	4	68	83	**1LE1543-3AC6** ■ - ■■■■	1260	5.41
8-pole: 750 rpm at 50 Hz. 900 rpm at 60 Hz																		
18.5	**22**	**200 L**	880	200	IE2	90.2	90.2	89	0.69	37.5	3.5	7.7	4.3	66	74	**1LE1543-2AD6** ■ - ■■■■	256	0.405
37	**44.5**	**250 M**	884	400	IE2	92.4	92.9	92.6	0.8	63	2.7	6.5	2.9	64	78	**1LE1543-2CD6** ■ - ■■■■	405	1
55	**66**	**280 M**	890	590	IE2	93.6	93.9	93.4	0.79	93	2.8	6.5	2.8	72	83	**1LE1543-2DD6** ■ - ■■■■	550	1.6

Voltages		Version					Order code
50 Hz 230 VΔ/400 VY	60 Hz 460 VY	**Standard**	**2**	**2**			–
50 Hz 400 VΔ/690 VY	60 Hz 460 VΔ	**Standard**	**3**	**4**			–
50 Hz 500 VY		Without additional charge	**2**	**7**			–
50 Hz 500 VΔ		Without additional charge	**4**	**0**			–
For other voltages and more information, see from page 3/104			**9**	**0**			...
Types of construction		Version					Order code
Without flange	IM B3 [1]	**Standard**		**A**			–
With flange	IM B5 [1]	With additional charge		**F**			–
For other types of construction and more information, see from page 3/111				■			...
Motor protection		Version					Order code
Without		**Standard**			**A**		–
PTC thermistor with 3 temperature sensors		With additional charge			**B**		–
For other motor protection and more information, see from page 3/121					■		...
Terminal box position		Version					
Terminal box at top		**Standard**				**4**	
For other terminal box positions and more information, see from page 3/124						■	
Special versions							Order code(s)
For options, see from page 3/132		**1LE1543-....**	■ -	■■■■		-Z	...+...+...+...

[1] Types derived from IM B3 (IM B6/7/8, IM V6 and IM V5), from IM B5 (IM V3 and IM V1) and from IM B14 (IM V19 and IM V18) are possible, provided that no requirement exists for stamping of the type on the rating plate. The basic type IM B3, IM B5, or IM B14 is stamped as standard on the rating plate. If mounted in a different position, the position must be specified to ensure that the condensation drainage holes are positioned correctly.

© Innomotics 2024

Cast-iron series Innomotics SD 1LE1643 Performance Line with increased power – self-ventilated

Selection and ordering data

Technical specifications at 60 Hz/P50 power rating

P_{rated}, 60 Hz/ P50 kW	P_{rated}, 60 Hz/ P60 [1] kW	Frame size FS	Operating values at rated power n_{rated}, 60 Hz rpm	T_{rated}, 60 Hz Nm	Different IE class 60 Hz/P60	η_{rated}, 60 Hz, 4/4 %	η_{rated}, 60 Hz, 3/4 %	η_{rated}, 60 Hz, 2/4 %	$\cos\varphi_{rated}$, 60 Hz, 4/4	I_{rated}, 60 Hz, 460 V A	T_{LR}/T_{rated}, 60 Hz	I_{LR}/I_{rated}, 60 Hz	T_B/T_{rated}, 60 Hz	L_{pfA}, 60 Hz dB(A)	L_{WA}, 60 Hz dB(A)	Cast-iron series 1LE1643 – *Performance Line* Article No.	$m_{IM\ B3}$ kg	J kgm²
_ Cooling: Self-ventilated (IC411) or with order code F90 forced-air cooled without external fan and fan cover (IC418)																		
_ Efficiency according to IEC 60034-30-1: IE3 Premium Efficiency																		
_ Insulation: Thermal class 155 (temperature class F), IP55 degree of protection, utilization in accordance with thermal class 130 (temperature class B)																		
2-pole: 3000 rpm at 50 Hz, 3600 rpm at 60 Hz																		
4	**4.55**	**100 L**	3530	10		88.5	88	86.4	0.8	6.6	4.5	12.4	5.8	75	83	**1LE1643-1AA6** ■ - ■■■■	37	0.0054
11	**12.6**	**132 M**	3560	14.8		89.5	89.3	88.2	0.86	9	3.1	10.4	4.7	76	84	**1LE1643-1CA6** ■ - ■■■■	75	0.031
15	**17.3**	**132 M**	3550	29.5		91	91.3	90.8	0.88	17.2	3.2	11.7	4.9	73	81	**1LE1643-1CA7** ■ - ■■■■	85	0.035
22	**25.3**	**160 L**	3570	40		91	90.9	90.1	0.83	25	3.4	11.1	5.4	78	86	**1LE1643-1DA6** ■ - ■■■■	149	0.073
30	**33.5**	**180 L**	3555	59		91.7	91.2	89.7	0.9	33.5	3.9	11	5	85	93	**1LE1643-1EA6** ■ - ■■■■	175	0.094
45	**51**	**200 L**	3560	80		92.4	92.6	92.1	0.87	47	2.9	8.8	4.5	77	89	**1LE1643-2AA6** ■ - ■■■■	245	0.17
55	**62**	**225 M**	3560	121		93.6	93.6	92.9	0.86	70	3	8.4	3.7	77	84	**1LE1643-2BA6** ■ - ■■■■	370	0.31
75	**84**	**250 M**	3570	147	IE2	93.6	93.6	92.8	0.88	84	3.2	8.9	4	75	88	**1LE1643-2CA6** ■ - ■■■■	455	0.56
110	**123**	**280 M**	3575	200		94.1	93.9	92.9	0.9	111	2.5	7.5	3.2	81	95	**1LE1643-2DA6** ■ - ■■■■	670	1.1
4-pole: 1500 rpm at 50 Hz, 1800 rpm at 60 Hz																		
4	**4.55**	**100 L**	1768	20		89.5	89.5	87.7	0.77	6.7	3.8	9.5	4.8	71	79	**1LE1643-1AB6** ■ - ■■■■	53	0.0149
11	**12.6**	**132 M**	1775	59	IE2	92.4	92	91	0.78	19.2	3.1	9.8	4.4	68	76	**1LE1643-1CB6** ■ - ■■■■	99	0.041
18.5	**21.3**	**160 L**	1780	99		93.6	93.5	92.3	0.75	33	3	9	4.2	67	81	**1LE1643-1DB6** ■ - ■■■■	126	0.099
30	**34.5**	**180 L**	1775	161	IE2	94.1	94.2	93.5	0.78	51	3.3	9.5	4.3	78	86	**1LE1643-1EB6** ■ - ■■■■	191	0.173
37	**42.5**	**200 L**	1780	198	IE2	94.5	94.6	94.2	0.8	61	3.3	9	4	70	77	**1LE1643-2AB6** ■ - ■■■■	258	0.275
55	**63**	**225 M**	1782	295	IE2	95.4	95.7	95.4	0.85	85	3.1	7.4	3	74	88	**1LE1643-2BB6** ■ - ■■■■	405	0.65
75	**86**	**250 M**	1788	400		95.4	95.4	94.8	0.84	117	3.4	8.8	3.8	74	88	**1LE1643-2CB6** ■ - ■■■■	510	1.1
110	**127**	**280 M**	1788	590	IE2	95.8	95.7	94.9	0.85	170	3.4	9.2	3.7	81	95	**1LE1643-2DB6** ■ - ■■■■	720	1.8
6-pole: 1000 rpm at 50 Hz, 1200 rpm at 60 Hz																		
18.5	**22**	**180 L**	1180	150	IE2	93	93.2	92.6	0.75	33.5	2.9	7.9	3.7	69	81	**1LE1643-1EC6** ■ - ■■■■	185	0.247
30	**36**	**200 L**	1182	240	IE2	94.1	94.5	94.2	0.77	52	3.2	7.6	3.2	63	70	**1LE1643-2AC6** ■ - ■■■■	264	TBD
37	**44.5**	**225 M**	1186	300	IE2	94.1	94.3	93.7	0.8	62	3.3	8.2	3.5	70	84	**1LE1643-2BC6** ■ - ■■■■	395	0.84
45	**54**	**250 M**	1188	360	IE2	94.5	94.7	94.2	0.83	72	2.8	8.1	3.2	69	83	**1LE1643-2CC6** ■ - ■■■■	480	1.3
75	**90**	**280 M**	1190	600		95	95.1	94.6	0.82	121	4.2	9.5	3.6	70	84	**1LE1643-2DC6** ■ - ■■■■	630	1.9
160	**192**	**315 L**	1193	1280	IE2	95.8	95.8	95.2	0.81	260	4	9.8	4	68	83	**1LE1643-3AC6** ■ - ■■■■	1260	5.4
8-pole: 750 rpm at 50 Hz. 900 rpm at 60 Hz																		
18.5	**22**	**200 L**	880	200	IE2	90.2	90.2	89	0.69	37.5	3.5	7.7	4.3	66	74	**1LE1643-2AD6** ■ - ■■■■	256	0.405
37	**44.5**	**250 M**	884	400	IE2	92.4	92.9	92.6	0.8	63	2.7	6.5	2.9	64	78	**1LE1643-2CD6** ■ - ■■■■	405	1
55	**66**	**280 M**	890	590	IE2	93.6	93.9	93.4	0.79	93	2.8	6.5	2.8	72	83	**1LE1643-2DD6** ■ - ■■■■	550	1.6

Voltages		Version							Order code
50 Hz 230 VΔ/400 VY	60 Hz 460 VY	**Standard**	**2**	**2**					–
50 Hz 400 VΔ/690 VY	60 Hz 460 VΔ	**Standard**	**3**	**4**					–
50 Hz 500 VY		Without additional charge	**2**	**7**					–
50 Hz 500 VΔ		Without additional charge	**4**	**0**					–
For other voltages and more information, see from page 3/104			**9**	**0**					...
Types of construction		Version							Order code
Without flange	IM B3 [1]	**Standard**			**A**				–
With flange	IM B5 [1]	With additional charge			**F**				–
For other types of construction and more information, see from page 3/111					■				...
Motor protection		Version							Order code
PTC thermistor with 3 temperature sensors		**Standard**				**B**			–
For other motor protection and more information, see from page 3/121						■			...
Terminal box position		Version							
Terminal box at top		**Standard**					**4**		
For other terminal box positions and more information, see from page 3/124							■		
Special versions									Order code(s)
For options, see from page 3/132			**1LE1643-....**	■ - ■■■■				**-Z**	...+...+...+...

[1] Types derived from IM B3 (IM B6/7/8, IM V6 and IM V5), from IM B5 (IM V3 and IM V1) and from IM B14 (IM V19 and IM V18) are possible, provided that no requirement exists for stamping of the type on the rating plate. The basic type IM B3, IM B5, or IM B14 is stamped as standard on the rating plate. If mounted in a different position, the position must be specified to ensure that the condensation drainage holes are positioned correctly.

© Innomotics 2024

Selection and ordering data

Technical specifications at 60 Hz/P50 power rating

P_{rated}, 60 Hz/P50 kW	P_{rated}, 60 Hz/P60 kW	Frame size FS	Operating values at rated power: n_{rated}, 60 Hz rpm	T_{rated}, 60 Hz Nm	η_{rated}, 60 Hz, 4/4 %	η_{rated}, 60 Hz, 3/4 %	η_{rated}, 60 Hz, 2/4 %	$\cos\varphi_{rated}$, 60 Hz, 4/4	I_{rated}, 60 Hz, 460 V A	T_{LR}/T_{rated}, 60 Hz	I_{LR}/I_{rated}, 60 Hz	T_B/T_{rated}, 60 Hz	L_{pfA}, 60 Hz dB(A)	L_{WA}, 60 Hz dB(A)	Aluminum series 1LE1041 Article No.	$m_{IM\ B3}$	J
_ Cooling: Self-ventilated (IC411) or with order code F90 forced-air cooled without external fan and fan cover (IC418)																	
_ Efficiency according to IEC 60034-30-1: IE2 High Efficiency																	
_ Insulation: Thermal class 155 (temperature class F), IP55 degree of protection, utilization in accordance with thermal class 130 (temperature class B)																	
2-pole: 3000 rpm at 50 Hz, 3600 rpm at 60 Hz																	
0.75	**0.86**	**80 M**	3445	2.1	75.5	76.2	74.8	0.83	1.5	2.1	6	3	64	75	**1LE1041-0DA2** ■ - ■■■■	9	0.0008
1.5	**1.75**	**90 S**	3505	4.1	84	83.5	80.7	0.82	2.75	3.1	8.5	4.5	69	81	**1LE1041-0EA0** ■ - ■■■■	13	0.0017
2.2	**2.55**	**90 L**	3510	6	85.5	85.2	82.6	0.83	3.9	3	8.7	4.6	69	81	**1LE1041-0EA4** ■ - ■■■■	16	0.0021
4	**4.55**	**112 M**	3545	10	87.5	87.2	85.1	0.8	6.6	3.7	10.4	4.5	75	83	**1LE1041-1BA2** ■ - ■■■■	27	0.0092
5.5	**6.3**	**132 S**	3545	14.8	88.5	88.5	88	0.91	8.6	2.2	8.7	3.4	74	82	**1LE1041-1CA0** ■ - ■■■■	39	0.02
7.5	**8.6**	**132 S**	3560	20	89.5	89.7	88.7	0.87	12.1	2.3	8.2	3.6	72	84	**1LE1041-1CA1** ■ - ■■■■	43	0.024
11	**12.6**	**160 M**	3560	29.5	90.2	89.6	87.4	0.86	17.8	2.4	8.2	3.6	77	89	**1LE1041-1DA2** ■ - ■■■■	67	0.045
15	**17.3**	**160 M**	3550	40.5	90.2	89.8	88.5	0.86	24.5	2.8	9	4.1	82	90	**1LE1041-1DA3** ■ - ■■■■	75	0.053
18.5	**21.3**	**160 L**	3565	49.5	91	90.8	89.5	0.87	29.5	3.3	8.9	4.1	77	89	**1LE1041-1DA4** ■ - ■■■■	84	0.061
4-pole: 1500 rpm at 50 Hz, 1800 rpm at 60 Hz																	
0.75	**0.86**	**80 M**	1750	4.1	78	77.3	74.4	0.72	1.68	2.5	6.8	3.8	60	68	**1LE1041-0DB3** ■ - ■■■■	11	0.0021
1.5	**1.75**	**90 L**	1745	8.2	84	84	81.9	0.75	3	2.9	7.5	4	58	70	**1LE1041-0EB4** ■ - ■■■■	15	0.0036
2.2	**2.55**	**100 L**	1760	11.9	87.5	88.3	87.4	0.78	4.05	2.5	8.1	3.9	62	74	**1LE1041-1AB4** ■ - ■■■■	21	0.0086
4	**4.55**	**112 M**	1770	20	87.5	87.2	85.1	0.77	6.9	3	8.7	4	62	74	**1LE1041-1BB2** ■ - ■■■■	29	0.014
5.5	**6.3**	**132 S**	1770	29.5	89.5	89.6	88.1	0.78	9.9	2.6	8	3.3	68	80	**1LE1041-1CB0** ■ - ■■■■	42	0.022
7.5	**8.6**	**132 M**	1770	40.5	89.5	90	89.3	0.82	12.8	2.7	8	3.4	68	80	**1LE1041-1CB2** ■ - ■■■■	49	0.028
11	**12.6**	**160 M**	1775	59	91	91.5	91.2	0.83	18.3	2.2	8.1	3.4	72	80	**1LE1041-1DB2** ■ - ■■■■	71	0.055
15	**17.3**	**160 L**	1780	80	91	91.1	90.1	0.84	24.5	2.6	8.5	3.4	69	81	**1LE1041-1DB4** ■ - ■■■■	83	0.071

Voltages (≤ 600 V)		Version					Order code
50 Hz 230 VΔ/400 VY	60 Hz 460 VY	**Standard**	**2**	**2**			–
50 Hz 400 VΔ	60 Hz 460 VΔ	**Standard**	**3**	**4**			–
50 Hz 500 VY		Without additional charge	**2**	**7**			–
50 Hz 500 VΔ		Without additional charge	**4**	**0**			–
For other voltages and more information, see from page 3/101			**9**	**0**			**...**
Types of construction		Version					Order code
With flange	IM B5 [1]	With additional charge		**F**			–
With flange	IM B14 [1]	With additional charge		**K**			–
For other types of construction and more information, see from page 3/107				■			**...**
Motor protection		Version					Order code
Without		**Standard**			**A**		–
PTC thermistor with 1 or 3 temperature sensors (frame sizes 80, 90 or 100 to 200)		With additional charge			**B**		–
For other motor protection and more information, see from page 3/120					■		**...**
Terminal box position		Version					
Terminal box at top		**Standard**				**4**	
For other terminal box positions and more information, see from page 3/123						■	
Special versions							Order code(s)
Forced-air cooled motors w/o ext. fan/fan cover (IC418)			**1LE1041-....** ■-■■■■ -Z				**F90+...+...+...**
For options, see from page 3/126			**1LE1041-....** ■-■■■■ -Z				**...+...+...+...**

[1] Types derived from IM B5 (IM V3 and IM V1) and from IM B14 (IM V19 and IM V18) are possible, provided that no requirements exist for condensation drainage holes (**H03**) and stamping of the type on the rating plate. The basic type IM B5 or IM B14 is stamped as standard on the rating plate. For orders with condensation drainage holes (**H03**), the type must be specified.

© Innomotics 2024

Selection and ordering data

Technical specifications at 60 Hz/P50 power rating

P_{rated}, 60 Hz/P50	P_{rated}, 60 Hz/P60	Frame size	Operating values at rated power: n_{rated}, 60 Hz	T_{rated}, 60 Hz	η_{rated}, 60 Hz, 4/4	η_{rated}, 60 Hz, 3/4	η_{rated}, 60 Hz, 2/4	$\cos\varphi_{rated}$, 60 Hz, 4/4	I_{rated}, 60 Hz, 460 V	T_{LR}/T_{rated}, 60 Hz	I_{LR}/I_{rated}, 60 Hz	T_B/T_{rated}, 60 Hz	L_{pfA}, 60 Hz	L_{WA}, 60 Hz	Aluminum series 1LE1041 Article No.	$m_{IM\ B3}$	J
kW	kW	FS	rpm	Nm	%	%	%		A				dB(A)	dB(A)			
_ Cooling: Self-ventilated (IC411) or with order code F90 forced-air cooled without external fan and fan cover (IC418)																	
_ Efficiency according to IEC 60034-30-1: IE2 High Efficiency																	
_ Insulation: Thermal class 155 (temperature class F), IP55 degree of protection, utilization in accordance with thermal class 130 (temperature class B)																	
6-pole: 1000 rpm at 50 Hz, 1200 rpm at 60 Hz																	
0.75	**0.86**	**90 S**	1145	6.3	73	72.7	69.7	0.65	1.98	2.2	4.5	3	46	58	**1LE1041-0EC0** ■-■■■■	16	0.003
1.5	**1.75**	**100 L**	1175	12.2	86.5	86.3	84.2	0.69	3.15	2.2	6.4	3.2	62	74	**1LE1041-1AC4** ■-■■■■	25	0.011
2.2	**2.55**	**112 M**	1170	18	87.5	87.6	85.9	0.73	4.3	2.1	6.3	3.2	65	77	**1LE1041-1BC2** ■-■■■■	29	0.014
4	**4.55**	**132 M**	1175	30	87.5	87.4	86	0.7	7.6	2.2	6.7	3.4	64	72	**1LE1041-1CC2** ■-■■■■	43	0.029
5.5	**6.3**	**132 M**	1170	45	89.5	89.6	88.1	0.7	11	2.5	6.5	3.3	66	74	**1LE1041-1CC3** ■-■■■■	52	0.037
7.5	**8.6**	**160 M**	1185	60	89.5	89.4	88.4	0.78	13.5	2.6	7.1	3	66	74	**1LE1041-1DC2** ■-■■■■	77	0.075
11	**12.6**	**160 L**	1182	89	90.2	90.2	88.9	0.78	19.6	2.9	7.4	3	65	73	**1LE1041-1DC4** ■-■■■■	93	0.098

Voltages (≤ 600 V)		Version						Order code
50 Hz 230 VΔ/400 VY	60 Hz 460 VY	**Standard**	**2**	**2**				–
50 Hz 400 VΔ	60 Hz 460 VΔ	**Standard**	**3**	**4**				–
50 Hz 500 VY		Without additional charge	**2**	**7**				–
50 Hz 500 VΔ		Without additional charge	**4**	**0**				–
For other voltages and more information, see from page 3/101			**9**	**0**				**...**
Types of construction		Version						Order code
With flange	IM B5 [1]	With additional charge			**F**			–
With flange	IM B14 [1]	With additional charge			**K**			–
For other types of construction and more information, see from page 3/107					■			**...**
Motor protection		Version						Order code
Without		**Standard**				**A**		–
PTC thermistor with 1 or 3 temperature sensors (frame sizes 90 or 100 to 200)		With additional charge				**B**		–
For other motor protection and more information, see from page 3/120						■		**...**
Terminal box position		Version						
Terminal box at top		**Standard**					**4**	
For other terminal box positions and more information, see from page 3/123							■	

Special versions			Order code(s)
Forced-air cooled motors w/o ext. fan/fan cover (IC418)	**1LE1041-....**	■-■■■■ -Z	**F90+...+...+...**
For options, see from page 3/126	**1LE1041-....**	■-■■■■ -Z	**...+...+...+...**

[1] Types derived from IM B5 (IM V3 and IM V1) and from IM B14 (IM V19 and IM V18) are possible, provided that no requirements exist for condensation drainage holes (**H03**) and stamping of the type on the rating plate. The basic type IM B5 or IM B14 is stamped as standard on the rating plate. For orders with condensation drainage holes (**H03**), the type must be specified.

© Innomotics 2024

Selection and ordering data

Technical specifications at 60 Hz/P50 power rating

P_{rated}, 60 Hz/ P50 kW	P_{rated}, 60 Hz/ P60 kW	Frame size FS	Operating values at rated power n_{rated}, 60 Hz rpm	T_{rated}, 60 Hz Nm	Different IE class	η_{rated}, 60 Hz, 4/4 %	η_{rated}, 60 Hz, 3/4 %	η_{rated}, 60 Hz, 2/4 %	$\cos\varphi_{rated}$, 60 Hz, 4/4	I_{rated}, 60 Hz, 460 V A	T_{LR}/T_{rated}, 60 Hz	I_{LR}/I_{rated}, 60 Hz	T_B/T_{rated}, 60 Hz	L_{pfA}, 60 Hz dB(A)	L_{WA}, 60 Hz dB(A)	Aluminum series 1LE1041 Article No.	$m_{IM\ B3}$ kg	J kgm²
_ Cooling: Self-ventilated (IC411) or with order code F90 forced-air cooled without external fan and fan cover (IC418)																		
_ Efficiency according to IEC 60034-30-1: IE2 High Efficiency																		
_ Insulation: Thermal class 155 (temperature class F), IP55 degree of protection, utilization in accordance with thermal class 130 (temperature class B)																		
2-pole: 3000 rpm at 50 Hz, 3600 rpm at 60 Hz																		
4	**4.55**	**100 L**	3530	10		87.5	87.5	85.9	0.84	6.3	3.3	9.6	4.6	71	83	**1LE1041-1AA6** ■-■■■■	26	0.0054
5.5	**6.3**	**112 M**	3550	14.8		88.5	88.6	87.4	0.87	9	2.8	9.9	4.5	73	85	**1LE1041-1BA6** ■-■■■■	34	0.012
11	**12.6**	**132 M**	3535	29.5		90.2	91	90.4	0.92	16.6	2.5	9.7	3.7	83	91	**1LE1041-1CA6** ■-■■■■	57	0.031
15	**17.3**	**132 L**	3555	40.5		90.2	90.6	90.3	0.91	23	2.5	10	4.7	72	84	**1LE1041-1CA7** ■-■■■■	65	0.035
22	**25.3**	**160 L**	3565	59		91	91	89.9	0.89	34	3.6	9.6	4.3	77	89	**1LE1041-1DA6** ■-■■■■	94	0.068
4-pole: 1500 rpm at 50 Hz, 1800 rpm at 60 Hz																		
4	**4.55**	**100 L**	1770	20		87.5	87.7	86.3	0.76	7	2.8	9.2	4.3	62	74	**1LE1041-1AB6** ■-■■■■	30	0.014
5.5	**6.3**	**112 M**	1765	30		89.5	89.3	87.4	0.8	9.6	2.8	8.3	3.6	62	74	**1LE1041-1BB6** ■-■■■■	34	0.017
11	**12.6**	**132 M**	1770	59		91	91.5	90.8	0.82	18.5	2.9	8.5	3.6	68	80	**1LE1041-1CB6** ■-■■■■	64	0.046
18.5	**21.3**	**160 L**	1780	99		92.4	92.4	91.3	0.84	30	2.9	8.8	3.6	69	81	**1LE1041-1DB6** ■-■■■■	100	0.085
6-pole: 1000 rpm at 50 Hz, 1200 rpm at 60 Hz																		
7.5	**8.6**	**132 M**	1175	61		89.5	89.8	88.7	0.72	14.6	2.2	6.4	3	67	79	**1LE1041-1CC6** ■-■■■■	64	0.046
15	**17.3**	**160 L**	1180	121	IE1	90.2	90.3	89.2	0.73	28.5	2.3	5.8	2.6	70	82	**1LE1041-1DC6** ■-■■■■	115	0.12

Voltages (≤ 600 V) [1]		Version					Order code
50 Hz 230 VΔ/400 VY	60 Hz 460 VY	**Standard**	**2**	**2**			–
50 Hz 400 VΔ	60 Hz 460 VΔ	**Standard**	**3**	**4**			–
50 Hz 500 VY		Without additional charge	**2**	**7**			–
50 Hz 500 VΔ		Without additional charge	**4**	**0**			–
For other voltages and more information, see from page 3/101			**9**	**0**			**...**
Types of construction [2]		Version					Order code
With flange	IM B5 [3]	With additional charge			**F**		–
With flange	IM B14 [3]	With additional charge			**K**		–
For other types of construction and more information, see from page 3/107					■		**...**
Motor protection		Version					Order code
Without		**Standard**				**A**	–
PTC thermistor with 3 temperature sensors		With additional charge				**B**	–
For other motor protection and more information, see from page 3/120						■	**...**
Terminal box position		Version					
Terminal box at top		**Standard**				**4**	
For other terminal box positions and more information, see from page 3/123						■	

Special versions		Order code(s)
Forced-air cooled motors w/o ext. fan/fan cover (IC418)	**1LE1041-....** ■-■■■■ **-Z**	**F90+...+...+...**
For options, see from page 3/126	**1LE1041-....** ■-■■■■ **-Z**	**...+...+...+...**

[1] Operating voltages only ≤ 600 V admissible in accordance with MG1 Table 12-11.

[2] Types of construction with feet are not possible for 2-pole, 4-pole and 6-pole motors ≤ 200 hp in accordance with MG1 Table 12-11.

[3] Types derived from IM B5 (IM V3 and IM V1) and from IM B14 (IM V19 and IM V18) are possible, provided that no requirements exist for condensation drainage holes (**H03**) and stamping of the type on the rating plate. The basic type IM B5 or IM B14 is stamped as standard on the rating plate. For orders with condensation drainage holes (**H03**), the type must be specified.

© Innomotics 2024

Selection and ordering data

Technical specifications at 60 Hz/P50 power rating

P_{rated}, 60 Hz/P50	P_{rated}, 60 Hz/P60	Frame size	Operating values at rated power n_{rated}, 60 Hz	T_{rated}, 60 Hz	Different IE class	η_{rated}, 60 Hz, 4/4	η_{rated}, 60 Hz, 3/4	η_{rated}, 60 Hz, 2/4	$\cos\varphi_{rated}$, 60 Hz, 4/4	I_{rated}, 60 Hz, 460 V	T_{LR}/T_{rated}, 60 Hz	I_{LR}/I_{rated}, 60 Hz	T_B/T_{rated}, 60 Hz	L_{pfA}, 60 Hz	L_{WA}, 60 Hz	Cast-iron series 1LE1541 – *Basic Line* Article No.	$m_{IM\ B3}$	J
kW	kW	FS	rpm	Nm			%	%		A				dB(A)	dB(A)		kg	kgm²
_ Cooling: Self-ventilated (IC411) or with order code F90 forced-air cooled without external fan and fan cover (IC418)																		
_ Efficiency according to IEC 60034-30-1: IE2 High Efficiency																		
_ Insulation: Thermal class 155 (temperature class F), IP55 degree of protection, utilization in accordance with thermal class 130 (temperature class B)																		
2-pole: 3000 rpm at 50 Hz, 3600 rpm at 60 Hz																		
22	**24.5**	**180 M**	3550	59		91	90.8	89.5	0.86	35.5	3	8.4	4.1	81	84	**1LE1541-1EA2** ■-■■■■	145	0.069
30	**33.5**	**200 L**	3565	80		91.7	91.2	89.6	0.86	47.5	2.9	7.7	3.8	82	89	**1LE1541-2AA4** ■-■■■■	205	0.13
37	**41.5**	**200 L**	3565	99		92.4	92.2	91	0.87	58	3.3	8.1	3.8	82	89	**1LE1541-2AA5** ■-■■■■	225	0.15
45	**51**	**225 M**	3570	120		93	92.7	91.3	0.88	69	3.1	8.7	3.8	77	90	**1LE1541-2BA2** ■-■■■■	295	0.23
55	**62**	**250 M**	3575	147		93	92.5	91	0.89	83	2.4	7.4	3.5	80	94	**1LE1541-2CA2** ■-■■■■	360	0.4
75	**84**	**280 S**	3580	200		93.6	92.9	91.1	0.87	116	2.8	7.7	3.5	81	95	**1LE1541-2DA0** ■-■■■■	490	0.71
90	**101**	**280 M**	3578	240		94.5	94.2	93.1	0.88	136	2.7	7.9	3.4	81	95	**1LE1541-2DA2** ■-■■■■	530	0.83
110	**123**	**315 S**	3585	295		94.5	94	92.5	0.9	162	2.6	7.9	3.3	82	96	**1LE1541-3AA0** ■-■■■■	720	1.3
132	**148**	**315 M**	3585	350		95	94.7	93.6	0.91	192	2.7	8.1	3.4	82	96	**1LE1541-3AA2** ■-■■■■	880	1.6
160	**180**	**315 L**	3585	425		95	94.6	93.3	0.92	230	2.7	8	3.2	84	99	**1LE1541-3AA4** ■-■■■■	930	1.8
200	**224**	**315 L**	3585	530		95.4	95.2	94.2	0.92	285	3.1	8.3	3.2	84	99	**1LE1541-3AA5** ■-■■■■	1130	2.2
4-pole: 1500 rpm at 50 Hz, 1800 rpm at 60 Hz																		
18.5	**21.3**	**180 M**	1770	100		92.4	92.6	91.9	0.83	30.5	2.8	7.7	3.9	64	77	**1LE1541-1EB2** ■-■■■■	160	0.12
22	**25.3**	**180 L**	1770	119		92.4	92.5	91.8	0.83	36	3	8.4	3.9	72	79	**1LE1541-1EB4** ■-■■■■	168	0.13
30	**34.5**	**200 L**	1778	161		93	93.1	92.2	0.84	48	3.2	8.2	3.7	72	79	**1LE1541-2AB5** ■-■■■■	220	0.2
37	**42.5**	**225 S**	1778	199		93	93.2	92.5	0.87	57	2.7	7.2	3.3	69	82	**1LE1541-2BB0** ■-■■■■	280	0.42
45	**52**	**225 M**	1778	240		93.6	93.8	93.1	0.86	70	3	7.6	3.5	69	83	**1LE1541-2BB2** ■-■■■■	305	0.46
55	**63**	**250 M**	1785	295		94.1	94.1	93.3	0.84	87	3.1	7.3	3.3	69	83	**1LE1541-2CB2** ■-■■■■	385	0.75
75	**86**	**280 S**	1788	400		94.5	94.3	93.2	0.87	114	2.7	7.6	3.2	79	92	**1LE1541-2DB0** ■-■■■■	550	1.3
90	**104**	**280 M**	1788	480		94.5	94.3	93.3	0.87	137	2.9	8.1	3.4	78	92	**1LE1541-2DB2** ■-■■■■	570	1.4
110	**127**	**315 S**	1790	590		95	94.8	93.8	0.86	169	3.1	8	3.3	79	94	**1LE1541-3AB0** ■-■■■■	740	2
132	**152**	**315 M**	1790	700		95	94.8	94	0.86	205	3.1	7.8	3.2	79	93	**1LE1541-3AB2** ■-■■■■	870	2.3
160	**184**	**315 L**	1790	850		95	94.7	93.5	0.87	245	3.1	8.3	3.2	80	95	**1LE1541-3AB4** ■-■■■■	940	2.8
200	**230**	**315 L**	1792	1070		95.4	94.7	93.6	0.86	305	3.8	9	3.2	84	98	**1LE1541-3AB5** ■-■■■■	1140	3.5

Voltages		Version					Order code
50 Hz 230 VΔ/400 VY	60 Hz 460 VY	**Standard**	**2**	**2**			–
50 Hz 400 VΔ/690 VY	60 Hz 460 VΔ	**Standard**	**3**	**4**			–
50 Hz 500 VY		Without additional charge	**2**	**7**			–
50 Hz 500 VΔ		Without additional charge	**4**	**0**			–
For other voltages and more information, see from page 3/104			**9**	**0**			**...**
Types of construction		Version					Order code
With flange	IM B5 [1]	With additional charge		**F**			–
For other types of construction and more information, see from page 3/111				■			**...**
Motor protection		Version					Order code
Without		**Standard**			**A**		–
PTC thermistor with 3 temperature sensors		With additional charge			**B**		–
For other motor protection and more information, see from page 3/121					■		**...**
Terminal box position		Version					
Terminal box at top		**Standard**				**4**	
For other terminal box positions and more information, see from page 3/124						■	
Special versions							Order code(s)
Forced-air cooled motors w/o ext. fan/fan cover (IC418)		**1LE1541-....** ■-■■■■ -Z					**F90 +...+...+...**
For options, see from page 3/132		**1LE1541-....** ■-■■■■ -Z					**...+...+...+...**

[1] Types derived from IM B5 (IM V3 and IM V1) and from IM B14 (IM V19 and IM V18) are possible, provided that no requirement exists for stamping of the type on the rating plate. The basic type IM B5 or IM B14 is stamped as standard on the rating plate. If mounted in a different position, the position must be specified to ensure that the condensation drainage holes are positioned correctly.

© Innomotics 2024

Selection and ordering data

Technical specifications at 60 Hz/P50 power rating

P_{rated}, 60 Hz/ P50	P_{rated}, 60 Hz/ P60	Frame size	Operating values at rated power n_{rated}, 60 Hz	T_{rated}, 60 Hz	Different IE class	η_{rated}, 60 Hz, 4/4	η_{rated}, 60 Hz, 3/4	η_{rated}, 60 Hz, 2/4	$\cos\varphi_{rated}$, 60 Hz, 4/4	I_{rated}, 60 Hz, 460 V	T_{LR}/T_{rated}, 60 Hz	I_{LR}/I_{rated}, 60 Hz	T_B/T_{rated}, 60 Hz	L_{pfA}, 60 Hz	L_{WA}, 60 Hz	Cast-iron series 1LE1541 – *Basic Line* Article No.	$m_{IM\ B3}$	J
kW	kW	FS	rpm	Nm			%	%		A				dB(A)	dB(A)		kg	kgm²
_ Cooling: Self-ventilated (IC411) or with order code F90 forced-air cooled without external fan and fan cover (IC418)																		
_ Efficiency according to IEC 60034-30-1: IE2 High Efficiency																		
_ Insulation: Thermal class 155 (temperature class F), IP55 degree of protection, utilization in accordance with thermal class 130 (temperature class B)																		
6-pole: 1000 rpm at 50 Hz, 1200 rpm at 60 Hz																		
15	**18**	**180 L**	1178	122		90.2	90.2	89	0.77	27	2.8	6.9	3.4	60	73	**1LE1541-1EC4** ■-■■■■	153	0.17
18.5	**22**	**200 L**	1182	149	IE1	91.7	92	91.5	0.81	31.5	2.6	6.7	3	66	79	**1LE1541-2AC4** ■-■■■■	198	0.25
22	**26.5**	**200 L**	1182	178	IE1	91.7	92.1	91.6	0.81	37	3	7.4	3	66	79	**1LE1541-2AC5** ■-■■■■	220	0.3
30	**36**	**225 M**	1182	240	IE1	93	93.3	92.6	0.83	49	2.9	7	3.1	66	79	**1LE1541-2BC2** ■-■■■■	300	0.58
37	**44.5**	**250 M**	1185	300	IE1	93	93.3	92.6	0.83	60	3.3	7.3	2.8	66	79	**1LE1541-2CC2** ■-■■■■	370	0.86
45	**54**	**280 S**	1188	360	IE1	93.6	93.8	93.1	0.84	72	3.1	7.4	3	67	81	**1LE1541-2DC0** ■-■■■■	460	1.1
55	**66**	**280 M**	1188	440	IE1	93.6	93.9	93.4	0.85	87	3.1	7.2	2.9	67	81	**1LE1541-2DC2** ■-■■■■	510	1.37
75	**90**	**315 S**	1190	600	IE1	94.1	94.1	93.2	0.83	121	2.7	7.5	3	67	82	**1LE1541-3AC0** ■-■■■■	660	2.1
90	**108**	**315 M**	1190	720	IE1	94.1	94.4	93.5	0.84	143	2.9	7.6	3.1	68	83	**1LE1541-3AC2** ■-■■■■	730	2.5
110	**132**	**315 L**	1190	880	IE1	95	95	94.6	0.85	171	3.3	8.1	3.2	69	84	**1LE1541-3AC4** ■-■■■■	940	3.6
132	**158**	**315 L**	1190	1060		95	95	94.4	0.85	205	3.7	9.2	3.6	69	84	**1LE1541-3AC5** ■-■■■■	990	4.02
160	**192**	**315 L**	1192	1280		95	94.9	94.2	0.85	250	3.8	9.3	3.4	71	85	**1LE1541-3AC6** ■-■■■■	1160	4.7

Voltages		Version					Order code
50 Hz 230 VΔ/400 VY	60 Hz 460 VY	**Standard**	**2**	**2**			–
50 Hz 400 VΔ/690 VY	60 Hz 460 VΔ	**Standard**	**3**	**4**			–
50 Hz 500 VY		Without additional charge	**2**	**7**			–
50 Hz 500 VΔ		Without additional charge	**4**	**0**			–
For other voltages and more information, see from page 3/104			**9**	**0**			**...**
Types of construction [1]		Version					Order code
With flange	IM B5 [2]	With additional charge		**F**			–
For other types of construction and more information, see from page 3/111				■			**...**
Motor protection		Version					Order code
Without		**Standard**			**A**		–
PTC thermistor with 3 temperature sensors		With additional charge			**B**		–
For other motor protection and more information, see from page 3/121					■		**...**
Terminal box position		Version					
Terminal box at top		**Standard**				**4**	
For other terminal box positions and more information, see from page 3/124						■	
Special versions							Order code(s)
Forced-air cooled motors w/o ext. fan/fan cover (IC418)		**1LE1541-....** ■-■■■■ -Z					**F90 +...+...+...**
For options, see from page 3/132		**1LE1541-....** ■-■■■■ -Z					**...+...+...+...**

[1] Types of construction with feet are not possible for 2-pole, 4-pole and 6-pole motors ≤ 200 hp in accordance with MG1 Table 12-11.

[2] Types derived from IM B5 (IM V3 and IM V1) and from IM B14 (IM V19 and IM V18) are possible, provided that no requirement exists for stamping of the type on the rating plate. The basic type IM B5 or IM B14 is stamped as standard on the rating plate. If mounted in a different position, the position must be specified to ensure that the condensation drainage holes are positioned correctly.

© Innomotics 2024

Innomotics GP and Innomotics SD standard motors

IE2

Cast-iron series Innomotics SD 1LE1541 Basic Line with increased power – self-ventilated or forced-air cooled

Selection and ordering data

Technical specifications at 60 Hz/P50 power rating

P_{rated}, 60 Hz/ P50	P_{rated}, 60 Hz/ P60	Frame size	Operating values at rated power n_{rated}, 60 Hz	T_{rated}, 60 Hz	Different IE class	η_{rated}, 60 Hz, 4/4	η_{rated}, 60 Hz, 3/4	η_{rated}, 60 Hz, 2/4	$\cos\varphi_{rated}$, 60 Hz, 4/4	I_{rated}, 60 Hz, 460 V	T_{LR}/T_{rated}, 60 Hz	I_{LR}/I_{rated}, 60 Hz	T_B/T_{rated}, 60 Hz	L_{pfA}, 60 Hz	L_{WA}, 60 Hz	Cast-iron series 1LE1541 – *Basic Line* Article No.	$m_{IM\ B3}$	J
kW	kW	FS	rpm	Nm			%	%		A				dB(A)	dB(A)		kg	kgm²
_ Cooling: Self-ventilated (IC411) or with order code F90 forced-air cooled without external fan and fan cover (IC418)																		
_ Efficiency according to IEC 60034-30-1: IE2 High Efficiency																		
_ Insulation: Thermal class 155 (temperature class F), IP55 degree of protection, utilization in accordance with thermal class 130 (temperature class B)																		
2-pole: 3000 rpm at 50 Hz, 3600 rpm at 60 Hz																		
30	**33.5**	**180 L**	3550	81		91.7	91.7	90.6	0.89	46	2.5	8.5	3.7	81	83	**1LE1541-1EA6** ■-■■■■	175	0.094
45	**51**	**200 L**	3560	121		93	93	92.4	0.86	71	3	8.4	3.7	82	89	**1LE1541-2AA6** ■-■■■■	245	0.176
55	**62**	**225 M**	3565	147		93	92.8	91.8	0.88	84	2.8	7.9	3.6	78	91	**1LE1541-2BA6** ■-■■■■	320	0.26
75	**84**	**250 M**	3578	200		93.6	93.1	91.6	0.85	118	2.4	7.7	3.5	80	94	**1LE1541-2CA6** ■-■■■■	390	0.463
110	**123**	**280 M**	3582	295		94.5	94.4	93.5	0.9	162	3.5	9.6	3.9	84	96	**1LE1541-2DA6** ■-■■■■	650	1.2
4-pole: 1500 rpm at 50 Hz, 1800 rpm at 60 Hz																		
30	**34.5**	**180 L**	1770	162		93	93.2	92.7	0.8	51	2.6	8.7	3.9	71	78	**1LE1541-1EB6** ■-■■■■	184	0.159
37	**42.5**	**200 L**	1775	199		93	93.4	93.1	0.84	59	2.6	8.4	3.3	71	78	**1LE1541-2AB6** ■-■■■■	240	0.246
55	**63**	**225 M**	1780	295		94.1	94.4	94	0.84	87	2.8	7.1	3	72	85	**1LE1541-2BB6** ■-■■■■	320	0.47
75	**86**	**250 M**	1785	400		94.5	94.6	94	0.85	117	2.6	7.1	3.1	78	91	**1LE1541-2CB6** ■-■■■■	440	0.85
110	**127**	**280 M**	1786	590		95	95.1	94.5	0.86	169	2.9	7.9	3.3	82	96	**1LE1541-2DB6** ■-■■■■	680	1.7
6-pole: 1000 rpm at 50 Hz, 1200 rpm at 60 Hz																		
18.5	**22**	**180 L**	1180	150		91.7	91.8	90.9	0.75	34	2.6	7	3.4	70	83	**1LE1541-1EC6** ■-■■■■	166	0.206
30	**34.5**	**200 L**	1180	245		93	93.4	93	0.77	53	2.9	7.4	3.1	71	78	**1LE1541-2AC6** ■-■■■■	243	0.381
37	**44.5**	**225 M**	1182	300	IE1	93	93.3	92.8	0.82	61	2.8	7.3	3.2	67	80	**1LE1541-2BC6** ■-■■■■	325	0.67
45	**54**	**250 M**	1186	360	IE1	93.6	93.9	93.4	0.84	72	2.7	7.8	3	71	85	**1LE1541-2CC6** ■-■■■■	410	1
75	**90**	**280 M**	1188	600		94.1	94.3	93.9	0.84	119	3.7	8	3.2	69	83	**1LE1541-2DC6** ■-■■■■	570	1.8

Voltages		Version					Order code
50 Hz 230 VΔ/400 VY	60 Hz 460 VY	**Standard**	**2**	**2**			–
50 Hz 400 VΔ/690 VY	60 Hz 460 VΔ	**Standard**	**3**	**4**			–
50 Hz 500 VY		Without additional charge	**2**	**7**			–
50 Hz 500 VΔ		Without additional charge	**4**	**0**			–
For other voltages and more information, see from page 3/104			**9**	**0**			**...**
Types of construction [1]		Version					Order code
With flange	IM B5 [2]	With additional charge		**F**			–
For other types of construction and more information, see from page 3/111				■			**...**
Motor protection		Version					Order code
Without		**Standard**			**A**		–
PTC thermistor with 3 temperature sensors		With additional charge			**B**		–
For other motor protection and more information, see from page 3/121					■		**...**
Terminal box position		Version					
Terminal box at top		**Standard**				**4**	
For other terminal box positions and more information, see from page 3/124						■	

Special versions		Order code(s)
Forced-air cooled motors w/o ext. fan/fan cover (IC418)	**1LE1541-....** ■-■■■■ **-Z**	**F90 +...+...+...**
For options, see from page 3/132	**1LE1541-....** ■-■■■■ **-Z**	**...+...+...+...**

[1] Types of construction with feet are not possible for 2-pole, 4-pole and 6-pole motors ≤ 200 hp in accordance with MG1 Table 12-11.

[2] Types derived from IM B5 (IM V3 and IM V1) and from IM B14 (IM V19 and IM V18) are possible, provided that no requirement exists for stamping of the type on the rating plate. The basic type IM B5 or IM B14 is stamped as standard on the rating plate. If mounted in a different position, the position must be specified to ensure that the condensation drainage holes are positioned correctly.

© Innomotics 2024

Selection and ordering data

Technical specifications at 60 Hz/P50 power rating

P_{rated}, 60 Hz/P50	P_{rated}, 60 Hz/P50	Frame size	Operating values at rated power: n_{rated}, 60 Hz	T_{rated}, 60 Hz	η_{rated}, 60 Hz, 4/4	η_{rated}, 60 Hz, 3/4	η_{rated}, 60 Hz, 2/4	$\cos\varphi_{rated}$, 60 Hz, 4/4	I_{rated}, 60 Hz, 440 V	T_{LR}/T_{rated}, 60 Hz	I_{LR}/I_{rated}, 60 Hz	T_B/T_{rated}, 60 Hz	L_{pfA}, 60 Hz	L_{WA}, 60 Hz	Aluminum series 1LE1073 Article No.		$m_{IM\ B3}$	J
kW	CV (hp)	FS	rpm	Nm	%	%	%		A				dB(A)	dB(A)			kg	kgm²
_ Cooling: Self-ventilated (IC411) or with order code F90 forced-air cooled without external fan and fan cover (IC418)																		
_ Efficiency according to NBR 17094-1: IR3 Rendimento Premium																		
_ Insulation: Thermal class 155 (temperature class F), IP55 degree of protection, utilization in accordance with thermal class 130 (temperature class B)																		
2-pole: 3000 rpm at 50 Hz, 3600 rpm at 60 Hz																		
1.1	**1.5**	**80 M**	3485	3	84	84.3	82.5	0.84	2.05	3.5	8.5	3.6	69	77	**1LE1073-0DA3**	■-■■■■	12	0.0013
1.5	**2**	**80 M**	3470	4.15	85.5	85.7	85	0.85	2.7	4.2	9.2	4.2	74	82	**1LE1073-0DA6**	■-■■■■	18	0.0014
2.2	**3**	**90 S**	3515	6	86.5	86.5	84.2	0.88	3.8	2.7	9.1	4.6	74	82	**1LE1073-0EA4**	■-■■■■	20	0.0031
3	**4**	**100 L**	3520	8.1	88.5	88.9	88	0.9	4.95	3.2	9.4	4.6	75	83	**1LE1073-1AA4**	■-■■■■	26	0.0054
3.7	**5**	**100 L**	3515	10.1	88.5	89.1	88.4	0.87	6.3	3.7	9.6	4.9	75	83	**1LE1073-1AA6**	■-■■■■	26	0.0054
4.5	**6**	**112 M**	3550	12.1	88.5	89.2	87.9	0.9	7.4	2.4	9.6	3.9	79	87	**1LE1073-1BA5**	■-■■■■	36	0.012
5.5	**7.5**	**112 M**	3545	14.8	89.5	90.6	90.6	0.88	9.2	2.4	9.7	3.7	79	87	**1LE1073-1BA6**	■-■■■■	36	0.012
7.5	**10**	**132 S**	3560	20	90.2	90.3	89.7	0.92	11.9	2.3	10.2	3.8	75	83	**1LE1073-1CA1**	■-■■■■	57	0.0031
9.2	**12.5**	**132 M**	3550	24.5	91	91.5	91.5	0.92	14.4	2	8.8	3.3	76	84	**1LE1073-1CA5**	■-■■■■	62	0.0031
11	**15**	**132 M**	3555	29.5	91	91.8	91.8	0.9	17.6	2.1	9.6	4.5	76	84	**1LE1073-1CA6**	■-■■■■	62	0.0031
15	**20**	**160 M**	3560	40	91	90.9	89.6	0.9	24	2.3	9.2	3.9	81	89	**1LE1073-1DA3**	■-■■■■	84	0.0061
18.5	**25**	**160 M**	3555	49.5	91.7	91.8	90.8	0.91	29	2.6	9	3.8	81	89	**1LE1073-1DA4**	■-■■■■	94	0.0068
22	**30**	**160 L**	3550	59	91.7	92.1	91.5	0.92	34	2.7	9.1	3.8	81	89	**1LE1073-1DA6**	■-■■■■	120	0.077
4-pole: 1500 rpm at 50 Hz, 1800 rpm at 60 Hz																		
0.75	**1**	**80 M**	1760	4.05	83	81.6	77.8	0.7	1.69	3.2	7.8	4.2	58	66	**1LE1073-0DB3**	■-■■■■	13	0.0029
1.1	**1.5**	**80 M**	1750	6	84	84.4	83.1	0.78	2.2	3.1	8	3.9	58	66	**1LE1073-0DB6**	■-■■■■	14	0.0032
1.5	**2**	**90 S**	1750	8.2	86.5	86.7	85.1	0.79	2.9	2.8	8	4.1	62	70	**1LE1073-0EB4**	■-■■■■	20	0.0049
2.2	**3**	**90 L**	1745	12	87.5	87.3	85.7	0.79	4.2	3.1	8.5	4.2	65	73	**1LE1073-0EB6**	■-■■■■	25	0.0057
3	**4**	**100 L**	1760	16.3	89.5	90.8	89.7	0.84	5.2	2.8	8.9	4.2	65	74	**1LE1073-1AB5**	■-■■■■	30	0.014
3.7	**5**	**100 L**	1760	20	89.5	90.4	90.2	0.82	6.6	2.7	8.6	3.7	66	74	**1LE1073-1AB6**	■-■■■■	42	0.016
4.5	**6**	**112 M**	1765	24.5	89.5	89.8	88.9	0.83	7.9	2.3	8.5	3.6	68	76	**1LE1073-1BB5**	■-■■■■	34	0.017
5.5	**7.5**	**112 M**	1765	30	91	91.2	90.5	0.8	9.9	3	9.8	4.2	71	79	**1LE1073-1BB6**	■-■■■■	39	0.02
7.5	**10**	**132 S**	1770	40.5	91.7	92.2	91.6	0.85	12.6	2.4	8.9	3.8	72	80	**1LE1073-1CB2**	■-■■■■	61	0.046
9.2	**12.5**	**132 M**	1770	49.5	92.4	92.8	93.1	0.84	15.6	2.5	8.2	3.2	70	78	**1LE1073-1CB5**	■-■■■■	80	0.049
11	**15**	**132 M**	1765	60	92.4	92.9	92.3	0.84	18.6	2.5	8.2	3.4	68	76	**1LE1073-1CB6**	■-■■■■	80	0.049
15	**20**	**160 M**	1780	80	93	93.3	92.5	0.84	25	2.5	7.6	3.7	69	77	**1LE1073-1DB4**	■-■■■■	100	0.099
18.5	**25**	**160 L**	1780	99	93.6	93.7	93.1	0.81	32	2.5	8.5	3.6	69	77	**1LE1073-1DB6**	■-■■■■	110	0.101

Voltages		Version				Order code
50 Hz 220 VΔΔ/380 VYY/440 VΔ; 12 cables protruding without terminal board		**Standard**	**6**	**4**		–
For other voltages and more information, see from page 3/106			**9**	**0**		**...**
Types of construction		Version				Order code
Without flange	IM B3 [1]	**Standard**			**A**	–
With flange	IM B5 [1]	With additional charge			**F**	–
For other types of construction and more information, see from page 3/116					■	**...**
Motor protection		Version				Order code
Without		**Standard**			**A**	–
PTC thermistor with 3 temperature sensors		With additional charge			**B**	–
For other motor protection and more information, see from page 3/122					■	**...**
Terminal box position		Version				
Terminal box at top		**Standard**			**4**	
For other terminal box positions and more information, see from page 3/125					■	

Special versions			Order code(s)
Forced-air cooled motors w/o ext. fan/fan cover (IC418)	**1LE1073- ....**	■-■■■■ -Z	**F90 +...+...+...**
For options, see from page 3/140	**1LE1073- ....**	■-■■■■ -Z	**...+...+...+...**

[1] Types derived from IM B3 (IM B6/7/8, IM V6 and IM V5), from IM B5 (IM V3 and IM V1) and from IM B14 (IM V19 and IM V18) are possible, provided that no requirement exists for stamping of the type on the rating plate. The basic type IM B3, IM B5, or IM B14 is stamped as standard on the rating plate. If mounted in a different position, the position must be specified to ensure that the condensation drainage holes are positioned correctly.

© Innomotics 2024

Innomotics GP and Innomotics SD standard motors

Aluminum series Innomotics GP 1LE1073 – self-ventilated or forced-air cooled

Selection and ordering data

Technical specifications at 60 Hz/P50 power rating

P_{rated}, 60 Hz/P50	P_{rated}, 60 Hz/P50	Frame size	Operating values at rated power: n_{rated}, 60 Hz	T_{rated}, 60 Hz	η_{rated}, 60 Hz, 4/4	η_{rated}, 60 Hz, 3/4	η_{rated}, 60 Hz, 2/4	$\cos\varphi_{rated}$, 60 Hz, 4/4	I_{rated}, 60 Hz, 440 V	T_{LR}/T_{rated}, 60 Hz	I_{LR}/I_{rated}, 60 Hz	T_B/T_{rated}, 60 Hz	L_{pfA}, 60 Hz	L_{WA}, 60 Hz	Aluminum series 1LE1073 Article No.	$m_{IM\ B3}$	J
kW	CV (hp)	FS	rpm	Nm	%	%	%		A				dB(A)	dB(A)		kg	kgm²
_ Cooling: Self-ventilated (IC411) or with order code F90 forced-air cooled without external fan and fan cover (IC418)																	
_ Efficiency according to NBR 17094-1: IR3 Rendimento Premium																	
_ Insulation: Thermal class 155 (temperature class F), IP55 degree of protection, utilization in accordance with thermal class 130 (temperature class B)																	
6-pole: 1000 rpm at 50 Hz, 1200 rpm at 60 Hz																	
0.37	**0.5**	**80 M**	1150	3.05	75.3	73.8	68.7	0.59	1.09	3.2	4.8	3.5	55	63	**1LE1073-0DC2** ■-■■■■	12	0.0025
0.55	**0.75**	**80 M**	1135	4.65	79.5	79.3	76.3	0.66	1.38	2.8	4.9	3.1	58	66	**1LE1073-0DC3** ■-■■■■	13	0.0031
0.75	**1**	**90 S**	1150	6.2	82.5	82.4	79.8	0.7	1.78	2.2	5.2	2.8	61	69	**1LE1073-0EC0** ■-■■■■	16	0.004
1.1	**1.5**	**100 L**	1170	9	87.5	87.2	87.2	0.66	2.5	3	7	3.9	62	70	**1LE1073-1AC3** ■-■■■■	28	0.014
1.5	**2**	**112 M**	1175	12.2	88.5	88.2	86.2	0.7	3.2	3.5	9	4.3	62	70	**1LE1073-1BC1** ■-■■■■	32	0.017
2.2	**3**	**132 S**	1175	17.9	89.5	89.5	88.2	0.74	4.35	2.1	6.8	3.2	63	71	**1LE1073-1CC1** ■-■■■■	43	0.037
3	**4**	**132 S**	1178	24.5	89.5	89.5	88	0.7	6.3	2.5	7.2	3.6	63	71	**1LE1073-1CC0** ■-■■■■	43	0.037
3.7	**5**	**132 S**	1180	30	89.5	89.3	88	0.71	7.6	2.7	7.6	3.7	65	73	**1LE1073-1CC2** ■-■■■■	47	0.037
4.5	**6**	**132 S**	1175	36.5	89.5	89.7	88.2	0.7	9	2.7	7.1	3.6	67	75	**1LE1073-1CC4** ■-■■■■	47	0.037
5.5	**7.5**	**132 M**	1175	44.5	91	91	89.8	0.73	10.9	2.7	7.3	3.6	67	75	**1LE1073-1CC3** ■-■■■■	58	0.046
7.5	**10**	**132 M**	1180	61	91	91.5	91.2	0.69	15.7	3.2	7.7	4	67	75	**1LE1073-1CC6** ■-■■■■	58	0.046
9.2	**12.5**	**160 M**	1185	74	91.7	91.9	90.5	0.78	16.9	3.1	7.8	3.1	71	79	**1LE1073-1DC3** ■-■■■■	105	0.12
11	**15**	**160 M**	1180	89	91.7	91.9	91.1	0.8	19.7	3.1	7.3	2.9	72	80	**1LE1073-1DC4** ■-■■■■	105	0.12
15	**20**	**160 L**	1185	121	91.7	91.7	90.5	0.74	29	3.8	8.1	3.5	73	81	**1LE1073-1DC6** ■-■■■■	105	0.12
8-pole: 750 rpm at 50 Hz, 900 rpm at 60 Hz																	
0.25	**0.33**	**80 M**	855	2.8	68	66.6	61	0.54	0.89	1.9	3.3	2.5	56	64	**1LE1073-0DD3** ■-■■■■	13	0.003
0.37	**0.5**	**90 S**	840	4.2	72	72.1	68.8	0.67	1.01	1.6	3.2	2.1	64	72	**1LE1073-0ED0** ■-■■■■	16	0.004
0.55	**0.75**	**90 L**	850	6.2	74	73.9	70.9	0.66	1.48	2.1	3.9	2.6	63	71	**1LE1073-0ED4** ■-■■■■	19	0.0048
0.75	**1**	**100 L**	855	8.4	75.5	76.6	74.4	0.7	1.86	1.6	4	2.2	65	73	**1LE1073-1AD4** ■-■■■■	21	0.0089
2.2	**3**	**132 S**	880	24	85.5	84.9	82.3	0.68	4.95	2.2	6.1	3.1	62	70	**1LE1073-1CD0** ■-■■■■	42	0.048
3.7	**5**	**132 M**	875	40.5	86.5	86.2	83.8	0.66	7.9	2.5	6.1	3.2	67	75	**1LE1073-1CD6** ■-■■■■	58	0.069
4.5	**6**	**160 M**	875	49	86.5	86.5	85.3	0.72	9.5	1.9	6.1	2.8	74	82	**1LE1073-1DD1** ■-■■■■	60	0.078
5.5	**7.5**	**160 M**	880	60	86.5	88.5	89.9	0.73	11.4	1.8	5.1	2.1	73	81	**1LE1073-1DD3** ■-■■■■	60	0.078
7.5	**10**	**160 L**	885	81	89.5	90	88.8	0.72	15.3	2.4	6.3	2.8	70	78	**1LE1073-1DD4** ■-■■■■	78	0.131

Voltages		Version				Order code
50 Hz 220 VΔΔ/380 VYY/440 VΔ; 12 cables protruding without terminal board		**Standard**	**6**	**4**		–
For other voltages and more information, see from page 3/106			**9**	**0**		**...**
Types of construction		Version				Order code
Without flange	IM B3 [1]	**Standard**		**A**		–
With flange	IM B5 [1]	With additional charge		**F**		–
For other types of construction and more information, see from page 3/116				■		**...**
Motor protection		Version				Order code
Without		**Standard**			**A**	–
PTC thermistor with 3 temperature sensors		With additional charge			**B**	–
For other motor protection and more information, see from page 3/122					■	**...**
Terminal box position		Version				
Terminal box at top		**Standard**				**4**
For other terminal box positions and more information, see from page 3/125						■

Special versions		Order code(s)
Forced-air cooled motors w/o ext. fan/fan cover (IC418)	**1LE1073- ....** ■-■■■■ -Z	**F90 +...+...+...**
For options, see from page 3/140	**1LE1073- ....** ■-■■■■ -Z	**...+...+...+...**

[1] Types derived from IM B3 (IM B6/7/8, IM V6 and IM V5), from IM B5 (IM V3 and IM V1) and from IM B14 (IM V19 and IM V18) are possible, provided that no requirement exists for stamping of the type on the rating plate. The basic type IM B3, IM B5, or IM B14 is stamped as standard on the rating plate. If mounted in a different position, the position must be specified to ensure that the condensation drainage holes are positioned correctly.

© Innomotics 2024

Selection and ordering data

Technical specifications at 60 Hz/P50 power rating

P_{rated}, 60 Hz/P50	P_{rated}, 60 Hz/P50	Frame size	Operating values at rated power: n_{rated}, 60 Hz	T_{rated}, 60 Hz	η_{rated}, 4/4	η_{rated}, 3/4	η_{rated}, 2/4	$\cos\varphi_{rated}$, 4/4	I_{rated}, 440 V	T_{LR}/T_{rated}, 60 Hz	I_{LR}/I_{rated}, 60 Hz	T_B/T_{rated}, 60 Hz	L_{pfA}, 60 Hz	L_{WA}, 60 Hz	Cast-iron series 1LE1573/1LE5773 Article No.	$m_{IM\,B3}$	J
kW	CV (hp)	FS	rpm	Nm	%	%	%		A				dB(A)	dB(A)		kg	kgm²
_ Cooling: Self-ventilated (IC411) or with order code F90 forced-air cooled without external fan and fan cover (IC418)																	
_ Efficiency according to NBR 17094-1: IR3 Rendimento Premium																	
_ Insulation: Thermal class 155 (temperature class F), IP55 degree of protection, utilization in accordance with thermal class 130 (temperature class B)																	
2-pole: 3000 rpm at 50 Hz, 3600 rpm at 60 Hz																	
30	**40**	**200 L**	3565	80	92.4	92.6	92.1	0.86	49.5	2.9	8.2	3.7	76	84	**1LE1573-2AA4** ■-■■■■	220	0.134
37	**50**	**200 L**	3560	99	93	93.4	92.3	0.87	60	3.1	8.5	3.7	78	86	**1LE1573-2AA5** ■-■■■■	245	0.158
45	**60**	**225 S**	3565	121	93.6	93.7	92.9	0.89	71	2.7	7.2	3.1	75	89	**1LE1573-2BA2** ■-■■■■	325	0.265
55	**75**	**225 M**	3555	148	93.6	94	93.8	0.88	88	2.2	6.6	2.8	76	89	**1LE1573-2BA6** ■-■■■■	385	0.315
75	**100**	**250 M**	3570	200	94.1	94.1	93.3	0.9	116	2.1	6.6	2.7	82	96	**1LE1573-2CA6** ■-■■■■	475	0.564
90	**125**	**280 S**	3575	240	95	95	94.2	0.9	138	2.2	7	2.7	78	92	**1LE1573-2DA2** ■-■■■■	610	0.934
110	**150**	**280 M**	3570	295	95	95	94.3	0.91	167	2.3	7	2.8	82	96	**1LE1573-2DA6** ■-■■■■	680	1.08
132	**175**	**315 S**	3575	355	95.4	95.3	94.3	0.88	205	1.7	6.1	2.3	84	99	**1LE5773-3AA2** ■-■■■■	1030	2
150	**200**	**315 M**	3582	400	95.4	95.1	94	0.9	230	2.4	8	3.1	84	99	**1LE5773-3AA4** ■-■■■■	1190	2
185	**250**	**315 M**	3578	495	95.8	95.9	95.4	0.9	280	1.5	6.1	2.2	82	96	**1LE5773-3AA5** ■-■■■■	1280	2.38
220	**300**	**315 L**	3582	590	95.8	95.8	95.2	0.91	330	2.2	8	2.9	84	99	**1LE5773-3AA6** ■-■■■■	1340	2.73
4-pole: 1500 rpm at 50 Hz, 1800 rpm at 60 Hz																	
22	**30**	**180 M**	1775	118	93.6	93.9	93.4	0.81	38	2.7	8.3	3.7	69	77	**1LE1573-1EB4** ■-■■■■	178	0.14
30	**40**	**200 L**	1775	161	94.1	94.6	94.5	0.84	50	2.7	7.9	3.1	66	74	**1LE1573-2AB5** ■-■■■■	240	0.22
37	**50**	**200 L**	1775	199	94.5	94.7	94.6	0.83	62	2.9	8.4	3.3	66	74	**1LE1573-2AB6** ■-■■■■	258	0.275
45	**60**	**225 S**	1782	240	95	95.3	94.9	0.84	74	2.9	7.6	2.9	69	82	**1LE1573-2BB2** ■-■■■■	315	0.47
55	**75**	**225 M**	1782	295	95.4	95.8	95.6	0.85	89	3	7.8	2.9	75	89	**1LE1573-2BB6** ■-■■■■	420	0.655
75	**100**	**250 M**	1780	400	95.4	95.6	95.4	0.85	121	2.1	6.2	2.5	75	89	**1LE1573-2CB6** ■-■■■■	530	1.07
90	**125**	**280 S**	1782	480	95.4	95.7	95.4	0.88	141	2.2	6.6	2.5	79	93	**1LE1573-2DB2** ■-■■■■	690	1.56
110	**150**	**280 M**	1785	590	95.8	96	95.7	0.9	167	2.5	7.2	2.7	82	96	**1LE1573-2DB6** ■-■■■■	740	1.67
132	**175**	**315 S**	1790	700	96.2	96.3	95.7	0.86	210	2.1	7.5	2.6	79	93	**1LE5773-3AB2** ■-■■■■	1350	2.8
150	**200**	**315 M**	1790	800	96.2	96.3	95.7	0.85	240	1.9	6.9	2.6	81	96	**1LE5773-3AB4** ■-■■■■	1110	3.13
185	**250**	**315 M**	1790	990	96.2	96.3	95.8	0.9	280	2.3	8	2.8	82	96	**1LE5773-3AB5** ■-■■■■	1210	3.64
220	**300**	**315 L**	1790	1170	96.2	96.3	95.8	0.87	345	2.3	7.2	2.7	81	96	**1LE5773-3AB6** ■-■■■■	1400	4.53
300	**400**	**315 L**	1788	1600	96.2	96.5	96.4	0.86	475	2.3	6.8	2.7	81	95	**1LE5773-3AB7** ■-■■■■	1560	5.28

Voltages		Version		Order code
50 Hz 220 VΔΔ/380 VYY/440 VΔ; 12 cables protruding without terminal board		**Standard**	**6 4**	–
For other voltages and more information, see from page 3/106			**9 0**	**...**
Types of construction		Version		Order code
Without flange	IM B3 [1]	**Standard**	**A**	–
With flange	IM B5 [1]	With additional charge	**F**	–
For other types of construction and more information, see from page 3/116			■	**...**
Motor protection		Version		Order code
Without		**Standard**	**A**	–
PTC thermistor with 3 temperature sensors		With additional charge	**B**	–
For other motor protection and more information, see from page 3/122			■	**...**
Terminal box position		Version		
Terminal box at top		**Standard**	**4**	
For other terminal box positions and more information, see from page 3/125			■	

Special versions		Order code(s)
Forced-air cooled motors w/o ext. fan/fan cover (IC418)	**1LE . . 73- . . . .** ■-■■■■ **-Z**	**F90 +...+...+...**
For options, see from page 3/140	**1LE . . 73- . . . .** ■-■■■■ **-Z**	**...+...+...+...**

[1] Types derived from IM B3 (IM B6/7/8, IM V6 and IM V5), from IM B5 (IM V3 and IM V1) and from IM B14 (IM V19 and IM V18) are possible, provided that no requirement exists for stamping of the type on the rating plate. The basic type IM B3, IM B5, or IM B14 is stamped as standard on the rating plate. If mounted in a different position, the position must be specified to ensure that the condensation drainage holes are positioned correctly.

© Innomotics 2024

Innomotics GP and Innomotics SD standard motors

Cast-iron series Innomotics SD 1LE1573, 1LE5773 – self-ventilated or forced-air cooled

Selection and ordering data

Technical specifications at 60 Hz/P50 power rating

P_{rated}, 60 Hz/P50	P_{rated}, 60 Hz/P50	Frame size	Operating values at rated power n_{rated}, 60 Hz	T_{rated}, 60 Hz	η_{rated}, 60 Hz, 4/4	η_{rated}, 60 Hz, 3/4	η_{rated}, 60 Hz, 2/4	$\cos\varphi_{rated}$, 60 Hz, 4/4	I_{rated}, 60 Hz, 440 V	T_{LR}/T_{rated}, 60 Hz	I_{LR}/I_{rated}, 60 Hz	T_B/T_{rated}, 60 Hz	L_{pfA}, 60 Hz	L_{WA}, 60 Hz	Cast-iron series 1LE1573/1LE5773 Article No.	$m_{IM\ B3}$	J
kW	CV (hp)	FS	rpm	Nm	%	%	%		A				dB(A)	dB(A)		kg	kgm²
_ Cooling: Self-ventilated (IC411) or with order code F90 forced-air cooled without external fan and fan cover (IC418)																	
_ Efficiency according to NBR 17094-1: IR3 Rendimento Premium																	
_ Insulation: Thermal class 155 (temperature class F), IP55 degree of protection, utilization in accordance with thermal class 130 (temperature class B)																	
6-pole: 1000 rpm at 50 Hz, 1200 rpm at 60 Hz																	
18.5	**25**	**180 L**	1180	150	93	93.3	92.8	0.75	35	2.9	7.9	3.7	73	81	**1LE1573-1EC6** ■-■■■■	185	4.36
22	**30**	**200 L**	1180	178	93	93.4	93.3	0.78	40	2.6	6.5	2.8	62	70	**1LE1573-2AC5** ■-■■■■	230	4.99
30	**40**	**200 L**	1182	240	94.1	94.3	93.7	0.75	56	3.2	7.8	3.3	66	74	**1LE1573-2AC6** ■-■■■■	264	5.56
37	**50**	**225 M**	1186	300	94.1	94.5	94.2	0.81	64	3	7.7	3.1	71	85	**1LE1573-2BC6** ■-■■■■	320	6.06
45	**60**	**250 S**	1186	360	94.5	95	94.7	0.84	74	2.8	7.7	2.9	69	83	**1LE1573-2CC6** ■-■■■■	500	3.74
55	**75**	**280 S**	1186	445	94.5	95	94.8	0.85	90	2.5	6.8	2.3	66	80	**1LE1573-2DC2** ■-■■■■	580	4.48
75	**100**	**280 S**	1186	600	95	95.7	95.9	0.84	123	3.2	7.4	2.7	70	84	**1LE1573-2DC6** ■-■■■■	650	5.36
90	**125**	**280 M**	1186	720	95	95.7	95.8	0.85	146	3.2	7.9	2.7	71	85	**1LE1573-2DC7** ■-■■■■	760	6.76
110	**150**	**315 M**	1190	880	95.8	96.3	96.3	0.86	175	2.2	7.3	2.8	67	82	**1LE5773-3AC4** ■-■■■■	1080	4.36
132	**175**	**315 M**	1188	1060	95.8	96.5	96.6	0.85	215	2	6.5	2.6	68	82	**1LE5773-3AC5** ■-■■■■	1160	4.99
150	**200**	**315 M**	1191	1200	95.8	96.1	96	0.83	250	2.3	7.3	2.8	69	83	**1LE5773-3AC6** ■-■■■■	1250	5.56
185	**250**	**315 L**	1191	1480	95.8	96.2	96.2	0.83	305	2.3	7	2.6	71	86	**1LE5773-3AC7** ■-■■■■	1410	6.06
8-pole: 750 rpm at 50 Hz, 900 rpm at 60 Hz																	
9.2	**12.5**	**180 M**	875	100	89.5	90.2	89.9	0.72	18.7	2.1	5.2	2.5	75	83	**1LE1573-1ED3** ■-■■■■	153	3.74
11	**15**	**180 L**	875	120	89.5	90.1	89.7	0.74	22	2.3	5.8	2.7	68	76	**1LE1573-1ED4** ■-■■■■	190	4.48
15	**20**	**180 L**	875	164	90.2	91.4	91.6	0.75	29	2.1	5.4	2.5	69	77	**1LE1573-1ED6** ■-■■■■	187	5.36
18.5	**25**	**200 L**	880	200	90.2	90.3	89.2	0.68	39.5	3.3	7.2	4.1	62	76	**1LE1573-2AD6** ■-■■■■	255	6.76
22	**30**	**225 S**	882	240	91.7	92.2	91.8	0.78	40.5	2.6	6.4	3	60	74	**1LE1573-2BD2** ■-■■■■	315	8.4
30	**40**	**225 M**	886	325	91.7	92.4	92.1	0.76	56	2.8	6.4	3.2	66	79	**1LE1573-2BD6** ■-■■■■	335	0.672
37	**50**	**250 M**	886	400	92.4	92.5	91.6	0.78	67	2.8	7	3	65	79	**1LE1573-2CD6** ■-■■■■	425	1.02
45	**60**	**250 M**	882	485	92.4	93.2	93.2	0.82	78	2.4	6.3	2.7	66	80	**1LE1573-2CD7** ■-■■■■	435	1.02
55	**75**	**280 S**	888	590	93.6	94.1	93.8	0.79	98	2.5	6.1	2.5	70	81	**1LE1573-2DD6** ■-■■■■	580	1.62
75	**100**	**280 M**	888	810	93.6	94.1	93.8	0.79	133	2.8	6.8	2.7	69	80	**1LE1573-2DD7** ■-■■■■	680	1.89
90	**125**	**315 M**	893	960	94.1	94.4	94	0.82	153	2.5	7	2.6	74	88	**1LE5773-3AD4** ■-■■■■	1000	3.74
110	**150**	**315 M**	891	1180	94.1	94.5	94.4	0.83	185	2.2	6.5	2.4	79	93	**1LE5773-3AD5** ■-■■■■	1100	4.48
132	**175**	**315 L**	890	1420	94.5	95	94.9	0.84	220	2.1	6	2.3	82	97	**1LE5773-3AD6** ■-■■■■	1150	5.36
150	**200**	**315 L**	890	1610	94.5	95.3	95.5	0.8	260	2.1	5.9	2.1	76	90	**1LE5773-3AD7** ■-■■■■	1420	6.76
185	**250**	**315 L**	893	1980	95	95.3	95	0.78	330	2.8	7.3	2.8	76	90	**1LE5773-3AD8** ■-■■■■	1660	8.4

Voltages		Version		Order code
50 Hz 220 VΔΔ/380 VYY/440 VΔ; 12 cables protruding without terminal board		**Standard**	**6 4**	–
For other voltages and more information, see from page 3/106			**9 0**	**...**
Types of construction		Version		Order code
Without flange	IM B3 [1]	**Standard**	**A**	–
With flange	IM B5 [1]	With additional charge	**F**	–
For other types of construction and more information, see from page 3/116			■	**...**
Motor protection		Version		Order code
Without		**Standard**	**A**	–
PTC thermistor with 3 temperature sensors		With additional charge	**B**	–
For other motor protection and more information, see from page 3/122			■	**...**
Terminal box position		Version		
Terminal box at top		**Standard**	**4**	
For other terminal box positions and more information, see from page 3/125			■	
Special versions				Order code(s)
Forced-air cooled motors w/o ext. fan/fan cover (IC418)			**1LE . . 73- . . . . ■-■■■■ -Z**	**F90 +...+...+...**
For options, see from page 3/140			**1LE . . 73- . . . . ■-■■■■ -Z**	**...+...+...+...**

[1] Types derived from IM B3 (IM B6/7/8, IM V6 and IM V5), from IM B5 (IM V3 and IM V1) and from IM B14 (IM V19 and IM V18) are possible, provided that no requirement exists for stamping of the type on the rating plate. The basic type IM B3, IM B5, or IM B14 is stamped as standard on the rating plate. If mounted in a different position, the position must be specified to ensure that the condensation drainage holes are positioned correctly.

© Innomotics 2024

Aluminum series Innomotics GP 1LE1023 – self-ventilated or forced-air cooled

Selection and ordering data

P_{rated}, 60 Hz/ P50	P_{rated}, 60 Hz/ P60	Frame size	Operating values at rated power η_{rated}, 60 Hz	T_{rated}, 60 Hz	EISA CC No. CC032A	η_{rated}, 60 Hz, 4/4	η_{rated}, 60 Hz, 3/4	η_{rated}, 60 Hz, 2/4	$\cos\varphi_{rated}$, 60 Hz, 4/4	I_{rated}, 60 Hz, 460 V	T_{LR}/T_{rated}, 60 Hz	I_{LR}/I_{rated}, 60 Hz	T_B/T_{rated}, 60 Hz	L_{pfA}, 60 Hz	L_{WA}, 60 Hz	Aluminum series 1LE1023 Article No.	$m_{IM\ B3}$	J
kW	hp	FS	rpm	Nm		%	%	%		A				dB(A)	dB(A)	▲ New	kg	kgm²
_ Cooling: Self-ventilated (IC411) or with order code F90 forced-air cooled without external fan and fan cover (IC418)																		
_ Efficiency: NEMA Premium Efficient, UL, CSA, and service factor (SF) 1.15 – for operation in the USA and Canada, NOM-certification is required for exporting to Mexico																		
_ Insulation: Thermal class 155 (temperature class F), IP55 degree of protection, utilization in accordance with thermal class 130 (temperature class B)																		
2-pole: 3000 rpm at 50 Hz, 3600 rpm at 60 Hz																		
0.18	**0.25**	**63 M**	3475	0.495		65.6	62.3	56	0.72	0.48	2.7	5.3	3.6	59	67	▲ **1LE1023-0BA2** ■-■■■■	4	0.00022
0.25	**0.33**	**63 M**	3465	0.69		69.5	66.6	59.3	0.76	0.59	2.4	5.2	3.1	56	64	▲ **1LE1023-0BA3** ■-■■■■	5	0.00026
0.37	**0.5**	**71 M**	3470	1.02		73.4	71.7	67	0.73	0.87	4.2	6.8	4.2	57	68	▲ **1LE1023-0CA2** ■-■■■■	7	0.00045
0.55	**0.75**	**71 M**	3470	1.51		76.8	75.3	71	0.73	1.23	4.5	7.2	4.5	62	73	▲ **1LE1023-0CA3** ■-■■■■	8	0.00056
0.75	**1**	**80 M**	3480	2.05	✓	77	77.2	75.7	0.84	1.45	3	7.1	3.6	64	75	**1LE1023-0DA2** ■-■■■■	12	0.0011
1.1	**1.5**	**80 M**	3500	3	✓	84	84	82	0.83	1.98	3.3	8.4	4	64	75	**1LE1023-0DA3** ■-■■■■	13	0.0013
1.5	**2**	**90 S**	3525	4.05	✓	85.5	84.8	82.3	0.84	2.6	3.1	9.8	4.9	69	81	**1LE1023-0EA0** ■-■■■■	16	0.0021
2.2	**3**	**90 L**	3530	6	✓	86.5	86.4	84.5	0.87	3.65	3	9.6	4.9	69	81	**1LE1023-0EA4** ■-■■■■	20	0.0031
3	**4**	**100 L**	3525	8.1	✓	88.5	88.2	86.7	0.85	5	4.6	11.2	5.6	75	83	**1LE1023-1AA4** ■-■■■■	25	0.0041
3.7	**5**	**112 M**	3555	9.9	✓	88.5	88.4	86.7	0.87	6	3.3	11.8	4.7	80	88	**1LE1023-1BA2** ■-■■■■	32	0.0079
5.5	**7.5**	**132 S**	3550	14.8	✓	89.5	89	87	0.87	8.9	3	11.1	4.6	74	82	**1LE1023-1CA0** ■-■■■■	48	0.0168
7.5	**10**	**132 S**	3555	20	✓	90.2	90.5	90	0.91	11.5	2.4	9.5	4.7	72	84	**1LE1023-1CA1** ■-■■■■	57	0.031
11	**15**	**160 M**	3555	29.5	✓	91	90.4	88.4	0.88	17.2	2.9	9.5	4	82	90	**1LE1023-1DA2** ■-■■■■	70	0.037
15	**20**	**160 M**	3560	40	✓	91	90.4	88.5	0.86	24	4	11.8	5.2	81	89	**1LE1023-1DA3** ■-■■■■	78	0.043
18.5	**25**	**160 L**	3560	49.5	✓	91.7	91.5	90.3	0.9	28	3.1	9.4	4.4	77	89	**1LE1023-1DA4** ■-■■■■	94	0.068
22	**30**	**180 M**	3560	59	✓	91.7	91.8	90.9	0.89	34	2.5	9	3.9	77	89	**1LE1023-1EA2** ■-■■■■	129	0.08
30	**40**	**200 L**	3560	80	✓	92.4	91.9	90.1	0.87	47	3	8.5	3.7	77	84	**1LE1023-2AA4** ■-■■■■	173	0.134
37	**50**	**200 L**	3560	99	✓	93	92.8	91.6	0.88	57	2.8	7.5	3.6	77	84	**1LE1023-2AA5** ■-■■■■	194	0.158

Voltages (≤ 600 V) [1]		Version					Order code
50 Hz 230 VΔ/400 VY	60 Hz 460 VY	**Standard**	**2**	**2**			–
50 Hz 400 VΔ	60 Hz 460 VΔ	**Standard**	**3**	**4**			–
50 Hz 500 VY		Without additional charge	**2**	**7**			–
50 Hz 500 VΔ		Without additional charge	**4**	**0**			–
For other voltages and more information, see from page 3/101			**9**	**0**			...
Types of construction		Version					Order code
Without flange	IM B3 [2]	**Standard**			**A**		–
With flange	IM B5 [2]	With additional charge			**F**		–
With flange	IM B14 [2]	With additional charge			**K**		–
For other types of construction and more information, see from page 3/107					■		...
Motor protection		Version					Order code
Without		**Standard**				**A**	–
PTC thermistor with 1 or 3 temperature sensors (frame sizes 80, 90 or 100 to 200)		With additional charge				**B**	–
For other motor protection and more information, see from page 3/120						■	...
Terminal box position		Version					
Terminal box at top		**Standard**					**4**
For other terminal box positions and more information, see from page 3/123							■

Special versions		Order code(s)
Forced-air cooled motors w/o ext. fan/fan cover (IC418)	**1LE1023-....** ■-■■■■ **-Z**	**F90 +...+...+...**
For options, see from page 3/126	**1LE1023-....** ■-■■■■ **-Z**	**...+...+...+...**

– Not required
✓ Available

[1] Operating voltages only ≤ 600 V admissible in accordance with MG1 Table 12-12.

[2] Types derived from IM B3 (IM B6/7/8, IM V6, and IM V5), from IM B5 (IM V3 and IM V1) and from IM B14 (IM V19 and IM V18) are possible, provided that no requirements exist for condensation drainage holes (**H03**) or stamping of the type on the rating plate. The basic type IM B3, IM B5, or IM B14 is stamped as standard on the rating plate. For orders with condensation drainage holes (**H03**), the type must be specified.

© Innomotics 2024

Innomotics GP and Innomotics SD standard motors

Aluminum series Innomotics GP 1LE1023 – self-ventilated or forced-air cooled

Selection and ordering data

P_{rated}, 60 Hz/ P50 kW	P_{rated}, 60 Hz/ P60 hp	Frame size FS	Operating values at rated power: n_{rated}, 60 Hz rpm	T_{rated}, 60 Hz Nm	EISA CC No. CC032A	η_{rated}, 60 Hz, 4/4 %	η_{rated}, 60 Hz, 3/4 %	η_{rated}, 60 Hz, 2/4 %	$\cos\varphi_{rated}$, 60 Hz, 4/4	I_{rated}, 60 Hz, 460 V A	T_{LR}/T_{rated}, 60 Hz	I_{LR}/I_{rated}, 60 Hz	T_B/T_{rated}, 60 Hz	L_{pfA}, 60 Hz dB(A)	L_{WA}, 60 Hz dB(A)	Aluminum series 1LE1023 Article No. ▲ New	$m_{IM\ B3}$ kg	J kgm²
_ Cooling: Self-ventilated (IC411) or with order code F90 forced-air cooled without external fan and fan cover (IC418)																		
_ Efficiency: NEMA Premium Efficient, UL, CSA, and service factor (SF) 1.15 – for operation in the USA and Canada, NOM-certification is required for exporting to Mexico																		
_ Insulation: Thermal class 155 (temperature class F), IP55 degree of protection, utilization in accordance with thermal class 130 (temperature class B)																		
4-pole: 1500 rpm at 50 Hz, 1800 rpm at 60 Hz																		
0.12	**0.16**	**63 M**	1710	0.67		67	64	57.1	0.62	0.36	2.9	4.3	3.3	64	72	▲ **1LE1023-0BB2** ■-■■■■	5	0.00045
0.18	**0.25**	**63 M**	1715	1		69.5	66.9	60.6	0.6	0.54	3.6	4.6	3.7	64	71	▲ **1LE1023-0BB3** ■-■■■■	6	0.00048
0.25	**0.33**	**71 M**	1715	1.39		73.4	72.3	68	0.68	0.63	2.9	4.9	3.1	47	58	▲ **1LE1023-0CB2** ■-■■■■	7	0.00095
0.37	**0.5**	**71 M**	1720	2.05		78.2	76.9	72.5	0.66	0.9	3.6	5.7	3.8	62	73	▲ **1LE1023-0CB3** ■-■■■■	9	0.0014
0.55	**0.75**	**80 M**	1750	3	–	81.1	80.9	78.6	0.74	1.15	2.7	6.9	3.8	53	61	**1LE1023-0DB2** ■-■■■■	11	0.0021
0.75	**1**	**80 M**	1760	4.05	✓	83.5	82.6	79.7	0.71	1.59	3.1	8.3	4.7	58	66	**1LE1023-0DB3** ■-■■■■	13	0.0029
1.1	**1.5**	**90 S**	1750	6	✓	86.5	86.4	84.2	0.75	2.15	3.4	8.2	4.4	58	70	**1LE1023-0EB0** ■-■■■■	15	0.0036
1.5	**2**	**90 L**	1755	8.2	✓	86.5	86.6	84.7	0.77	2.85	3.4	8.6	4.3	59	67	**1LE1023-0EB4** ■-■■■■	19	0.0049
2.2	**3**	**100 L**	1760	11.9	✓	89.5	89.5	88	0.8	3.85	3.5	9.9	4.6	70	78	**1LE1023-1AB4** ■-■■■■	25	0.0101
3	**4**	**100 L**	1760	16.3	✓	89.5	89.4	88	0.78	5.4	3.5	9.9	4.7	70	78	**1LE1023-1AB5** ■-■■■■	26	0.01
3.7	**5**	**112 M**	1770	20	✓	89.5	90	88.3	0.8	6.5	2.9	8.2	4.3	62	74	**1LE1023-1BB2** ■-■■■■	34	0.017
5.5	**7.5**	**132 S**	1775	29.5	✓	91.7	91.6	90.5	0.81	9.3	3.1	10	4.2	68	80	**1LE1023-1CB0** ■-■■■■	64	0.034
7.5	**10**	**132 M**	1770	40.5	✓	91.7	91.6	90.6	0.79	13	3.4	9.8	4.3	68	76	**1LE1023-1CB2** ■-■■■■	61	0.0334
11	**15**	**160 M**	1775	59	✓	92.4	92.6	92	0.81	18.4	3.8	9	4	70	78	**1LE1023-1DB2** ■-■■■■	78	0.0583
15	**20**	**160 L**	1775	81	✓	93	92.9	92.1	0.81	25	3.1	8.9	3.8	66	74	**1LE1023-1DB4** ■-■■■■	106	0.089
18.5	**25**	**180 M**	1775	100	✓	93.6	93.7	93.1	0.81	30.5	2.7	7.8	3.6	68	75	**1LE1023-1EB2** ■-■■■■	134	0.13
22	**30**	**180 L**	1775	118	✓	93.6	93.8	93.3	0.81	36.5	2.8	7.7	3.7	70	77	**1LE1023-1EB4** ■-■■■■	142	0.14
30	**40**	**200 L**	1778	161	✓	94.1	94.2	93.6	0.83	48	2.6	8.8	3.5	70	77	**1LE1023-2AB5** ■-■■■■	189	0.24

Voltages (≤ 600 V) [1]		Version					Order code
50 Hz 230 VΔ/400 VY	60 Hz 460 VY	**Standard**	**2**	**2**			–
50 Hz 400 VΔ	60 Hz 460 VΔ	**Standard**	**3**	**4**			–
50 Hz 500 VY		Without additional charge	**2**	**7**			–
50 Hz 500 VΔ		Without additional charge	**4**	**0**			–
For other voltages and more information, see from page 3/101			**9**	**0**			...
Types of construction		Version					Order code
Without flange	IM B3 [2]	**Standard**			**A**		–
With flange	IM B5 [2]	With additional charge			**F**		–
With flange	IM B14 [2]	With additional charge			**K**		–
For other types of construction and more information, see from page 3/107					■		...
Motor protection		Version					Order code
Without		**Standard**				**A**	–
PTC thermistor with 1 or 3 temperature sensors (frame sizes 80, 90 or 100 to 200)		With additional charge				**B**	–
For other motor protection and more information, see from page 3/120						■	...
Terminal box position		Version					
Terminal box at top		**Standard**				**4**	
For other terminal box positions and more information, see from page 3/123						■	

Special versions		Order code(s)
Forced-air cooled motors w/o ext. fan/fan cover (IC418)	**1LE1023- . . . .** ■-■■■■ -Z	**F90 +. . .+. . .+. . .**
For options, see from page 3/126	**1LE1023- . . . .** ■-■■■■ -Z	**. . .+. . .+. . .+. . .**

– Not required
✓ Available

[1] Operating voltages only ≤ 600 V admissible in accordance with MG1 Table 12-12.

[2] Types derived from IM B3 (IM B6/7/8, IM V6, and IM V5), from IM B5 (IM V3 and IM V1) and from IM B14 (IM V19 and IM V18) are possible, provided that no requirements exist for condensation drainage holes (**H03**) or stamping of the type on the rating plate. The basic type IM B3, IM B5, or IM B14 is stamped as standard on the rating plate. For orders with condensation drainage holes (**H03**), the type must be specified.

© Innomotics 2024

Aluminum series Innomotics GP 1LE1023 – self-ventilated or forced-air cooled

Selection and ordering data

P_{rated}, 60 Hz/ P50 kW	P_{rated}, 60 Hz/ P60 hp	Frame size FS	Operating values at rated power: n_{rated}, 60 Hz rpm	T_{rated}, 60 Hz Nm	EISA CC No. CC032A	η_{rated}, 60 Hz, 4/4 %	η_{rated}, 60 Hz, 3/4 %	η_{rated}, 60 Hz, 2/4 %	$\cos\varphi_{rated}$, 60 Hz, 4/4	I_{rated}, 60 Hz, 460 V A	T_{LR}/T_{rated}, 60 Hz	I_{LR}/I_{rated}, 60 Hz	T_B/T_{rated}, 60 Hz	L_{pfA}, 60 Hz dB(A)	L_{WA}, 60 Hz dB(A)	Aluminum series 1LE1023 Article No. ▲ New	$m_{IM\ B3}$ kg	J kgm²
_ Cooling: Self-ventilated (IC411) or with order code F90 forced-air cooled without external fan and fan cover (IC418)																		
_ Efficiency: NEMA Premium Efficient, UL, CSA, and service factor (SF) 1.15 – for operation in the USA and Canada, NOM-certification is required for exporting to Mexico																		
_ Insulation: Thermal class 155 (temperature class F), IP55 degree of protection, utilization in accordance with thermal class 130 (temperature class B)																		
6-pole: 1000 rpm at 50 Hz, 1200 rpm at 60 Hz																		
0.18	**0.25**	**71 M**	1110	1.55		67.5	66.3	61	0.63	0.53	2.8	3.5	2.9	42	53	▲ **1LE1023-0CC2** ■-■■■■	7	0.00098
0.25	**0.33**	**71 M**	1110	2.15		71.4	70.6	66.4	0.64	0.69	3.2	3.9	3.2	48	59	▲ **1LE1023-0CC3** ■-■■■■	9	0.0014
0.37	**0.5**	**80 M**	1150	3.05	–	75.3	74.3	70	0.61	1.01	2.7	5	3.3	45	56	**1LE1023-0DC2** ■-■■■■	12	0.0025
0.55	**0.75**	**80 M**	1145	4.6	–	81.7	80.5	76.4	0.63	1.34	2.8	5.3	3.4	45	56	**1LE1023-0DC3** ■-■■■■	13	0.0031
0.75	**1**	**90 S**	1155	6.2	✓	82.5	82.4	79.9	0.65	1.76	2.4	5.3	3.1	46	58	**1LE1023-0EC0** ■-■■■■	16	0.004
1.1	**1.5**	**100 L**	1180	8.9	✓	87.5	87.2	84.8	0.69	2.3	2.4	6.7	3.3	62	74	**1LE1023-1AC3** ■-■■■■	25	0.011
3	**4**	**132 S**	1180	24.5	✓	89.5	89.5	87.9	0.7	6	2.6	7.6	3.8	62	70	**1LE1023-1CC0** ■-■■■■	42	0.037
3.7	**5**	**132 M**	1180	30	✓	89.5	89.2	87.5	0.69	7.5	2.8	7.5	3.8	64	72	**1LE1023-1CC2** ■-■■■■	52	0.037
5.5	**7.5**	**132 M**	1180	44.5	✓	91	90.8	89.2	0.69	11	3	7.8	4	69	77	**1LE1023-1CC3** ■-■■■■	58	0.046
7.5	**10**	**160 M**	1185	60	✓	91	90.8	89.4	0.8	12.9	2.7	9.3	3.7	75	83	**1LE1023-1DC2** ■-■■■■	95	0.098
11	**15**	**160 L**	1185	89	✓	91.7	91.7	90.5	0.78	19.3	3.4	8	3.2	73	81	**1LE1023-1DC4** ■-■■■■	106	0.12
15	**20**	**180 L**	1178	122	✓	91.7	92	91.4	0.79	26	2.5	6.8	3	61	68	**1LE1023-1EC4** ■-■■■■	130	0.19
18.5	**25**	**200 L**	1180	150	✓	93	93.8	93.8	0.78	32	2.8	6.5	3	64	71	**1LE1023-2AC4** ■-■■■■	166	0.28
22	**30**	**200 L**	1180	178	✓	93	93.5	93.4	0.79	37.5	2.6	6.3	2.8	63	70	**1LE1023-2AC5** ■-■■■■	179	0.32
8-pole: 750 rpm at 50 Hz. 900 rpm at 60 Hz																		
0.12	**0.16**	**71 M**	830	1.38		59.5	56.9	50.3	0.56	0.45	2.6	2.9	2.7	49	56	▲ **1LE1023-0CD3** ■-■■■■	9	0.0014
0.18	**0.24**	**80 M**	865	1.99		64	60.6	53	0.44	0.78	2.6	3.5	3.5	55	68	**1LE1023-0DD2** ■-■■■■	12	0.0021
0.25	**0.33**	**80 M**	855	2.8		68	65.5	59.8	0.51	0.91	2	3.3	2.6	56	64	**1LE1023-0DD3** ■-■■■■	13	0.003
0.37	**0.5**	**90 S**	850	4.15		72	69.9	64.2	0.63	1.02	2	3.4	2.1	54	61	**1LE1023-0ED0** ■-■■■■	16	0.0045
0.55	**0.75**	**90 L**	855	6.1		74	71.6	65.8	0.62	1.5	2.3	4	2.8	59	66	**1LE1023-0ED4** ■-■■■■	19	0.0045
0.75	**1**	**100 L**	870	8.2		75.5	74.9	71.7	0.62	1.87	1.9	4.4	2.5	64	72	**1LE1023-1AD4** ■-■■■■	20	0.0096
1.1	**1.5**	**100 L**	865	12.1		78.5	78	75.7	0.62	2.7	2.3	4.8	3	65	73	**1LE1023-1AD5** ■-■■■■	26	0.013
1.5	**2**	**112 M**	875	16.4		84	83.1	80	0.59	3.75	2.9	5.8	3.6	65	73	**1LE1023-1BD2** ■-■■■■	34	0.028
2.2	**3**	**132 S**	880	24		85.5	85.2	82.9	0.68	4.75	2.3	5.8	3	65	73	**1LE1023-1CD0** ■-■■■■	42	0.046
2.2	**3**	**132 S**	880	24	✓	85.5	85.2	82.9	0.68	4.75	2.3	5.8	3	65	73	**1LE1023-1CD0** ■-■■■■	42	0.046
3	**4**	**132 M**	880	32.5	✓	86.5	85.9	83.5	0.69	6.3	2.2	6	3	67	80	**1LE1023-1CD2** ■-■■■■	58	0.061
3.7	**5**	**160 M**	885	40	✓	86.5	86.7	85.3	0.71	7.5	2	5.8	2.6	69	77	**1LE1023-1DD2** ■-■■■■	67	0.076
5.5	**7.5**	**160 M**	885	59	✓	86.5	86.7	85.5	0.72	10.8	2.3	6.3	2.8	66	79	**1LE1023-1DD3** ■-■■■■	78	0.1
7.5	**10**	**160 L**	885	81	✓	89.5	89.5	88.1	0.71	14.8	2.6	6.7	2.6	66	79	**1LE1023-1DD4** ■-■■■■	86	0.13
11	**15**	**180 L**	880	119	✓	89.5	89.9	89.3	0.72	21.5	2.3	5.8	2.7	65	78	**1LE1023-1ED4** ■-■■■■	161	0.267
15	**20**	**200 L**	882	162	✓	90.2	90.2	89.2	0.7	30	3.4	7.7	4.2	60	73	**1LE1023-2AD5** ■-■■■■	212	0.42

Voltages (≤ 600 V) [1]		Version					Order code
50 Hz 230 VΔ/400 VY	60 Hz 460 VY	**Standard**	**2**	**2**			–
50 Hz 400 VΔ	60 Hz 460 VΔ	**Standard**	**3**	**4**			–
50 Hz 500 VY		Without additional charge	**2**	**7**			–
50 Hz 500 VΔ		Without additional charge	**4**	**0**			–
For other voltages and more information, see from page 3/101			**9**	**0**			...
Types of construction		Version					Order code
Without flange	IM B3 [2]	**Standard**			**A**		–
With flange	IM B5 [2]	With additional charge			**F**		–
With flange	IM B14 [2]	With additional charge			**K**		–
For other types of construction and more information, see from page 3/107					■		...
Motor protection		Version					Order code
Without		**Standard**				**A**	–
PTC thermistor with 1 or 3 temperature sensors (frame sizes 80, 90 or 100 to 200)		With additional charge				**B**	–
For other motor protection and more information, see from page 3/120						■	...
Terminal box position		Version					
Terminal box at top		**Standard**					**4**
For other terminal box positions and more information, see from page 3/123							■
Special versions							Order code(s)
Forced-air cooled motors w/o ext. fan/fan cover (IC418)							**1LE1023-.... ■-■■■■ -Z F90 +...+...+...**
For options, see from page 3/126							**1LE1023-.... ■-■■■■ -Z ...+...+...+...**

– Not required
✓ Available

[1] Operating voltages only ≤ 600 V admissible in accordance with MG1 Table 12-12.

[2] Types derived from IM B3 (IM B6/7/8, IM V6, and IM V5), from IM B5 (IM V3 and IM V1) and from IM B14 (IM V19 and IM V18) are possible, provided that no requirements exist for condensation drainage holes (**H03**) or stamping of the type on the rating plate. The basic type IM B3, IM B5, or IM B14 is stamped as standard on the rating plate. For orders with condensation drainage holes (**H03**), the type must be specified.

© Innomotics 2024

Innomotics GP and Innomotics SD standard motors

Cast-iron series Innomotics SD 1LE1523 Basic Line – self-ventilated or forced-air cooled

Selection and ordering data

P_{rated}, 60 Hz/ P50 kW	P_{rated}, 60 Hz/ P60 hp	Frame size FS	Operating values at rated power: n_{rated}, 60 Hz rpm	T_{rated}, 60 Hz Nm	EISA CC No. CC032A	η_{rated}, 60 Hz, 4/4 %	η_{rated}, 60 Hz, 3/4 %	η_{rated}, 60 Hz, 2/4 %	$\cos\varphi_{rated}$, 60 Hz, 4/4	I_{rated}, 60 Hz, 460 V A	T_{LR}/T_{rated}, 60 Hz	I_{LR}/I_{rated}, 60 Hz	T_B/T_{rated}, 60 Hz	L_{pfA}, 60 Hz dB(A)	L_{WA}, 60 Hz dB(A)	Cast-iron series 1LE1523 – *Basic Line* Article No.	$m_{IM\ B3}$ kg	J kgm²
_ Cooling: Self-ventilated (IC411) or with order code F90 forced-air cooled without external fan and fan cover (IC418)																		
_ Efficiency: NEMA Premium Efficient, UL, CSA, and service factor (SF) 1.15 – for operation in the USA and Canada, NOM-certification is required for exporting to Mexico																		
_ Insulation: Thermal class 155 (temperature class F), IP55 degree of protection, utilization in accordance with thermal class 130 (temperature class B)																		
2-pole: 3000 rpm at 50 Hz, 3600 rpm at 60 Hz																		
0.37	**0.5**	**71 M**	3470	1.02	–	73.4	71.7	67	0.73	0.87	4.2	6.8	4.2	57	68	**1LE1523-0CA2** ■-■■■■	13	0.00045
0.55	**0.75**	**71 M**	3470	1.51	–	76.8	75.3	71	0.73	1.23	4.5	7.2	4.5	62	73	**1LE1523-0CA3** ■-■■■■	15	0.00056
0.75	**1**	**80 M**	3480	2.05	✓	77	77.2	75.7	0.84	1.45	3	7.1	3.6	64	75	**1LE1523-0DA2** ■-■■■■	18	0.0011
1.1	**1.5**	**80 M**	3500	3	✓	84	84	82	0.83	1.98	3.3	8.4	4	64	75	**1LE1523-0DA3** ■-■■■■	21	0.0013
1.5	**2**	**90 S**	3525	4.05	✓	85.5	84.8	82.3	0.84	2.6	3.1	9.8	4.9	69	81	**1LE1523-0EA0** ■-■■■■	26	0.0021
2.2	**3**	**90 L**	3530	6	✓	86.5	86.4	84.5	0.87	3.65	3	9.6	4.9	69	81	**1LE1523-0EA4** ■-■■■■	32	0.0031
3	**4**	**100 L**	3525	8.1	✓	88.5	88.2	86.7	0.85	5	4.6	11.2	5.6	75	83	**1LE1523-1AA4** ■-■■■■	37	0.0041
3.7	**5**	**112 M**	3555	9.9	✓	88.5	88.4	86.7	0.87	6	3.3	11.8	4.7	80	88	**1LE1523-1BA2** ■-■■■■	41	0.0079
5.5	**7.5**	**132 S**	3550	14.8	✓	89.5	89	87	0.87	8.9	3	11.1	4.6	74	82	**1LE1523-1CA0** ■-■■■■	66	0.0168
7.5	**10**	**132 S**	3555	20	✓	90.2	90.5	90	0.91	11.5	2.4	9.5	4.7	72	84	**1LE1523-1CA1** ■-■■■■	73	0.031
11	**15**	**160 M**	3555	29.5	✓	91	90.4	88.4	0.88	17.2	2.9	9.5	4	82	90	**1LE1523-1DA2** ■-■■■■	100	0.037
15	**20**	**160 M**	3560	40	✓	91	90.4	88.5	0.86	24	4	11.8	5.2	81	89	**1LE1523-1DA3** ■-■■■■	104	0.043
18.5	**25**	**160 L**	3560	49.5	✓	91.7	91.5	90.3	0.9	28	3.1	9.4	4.4	77	89	**1LE1523-1DA4** ■-■■■■	127	0.068
22	**30**	**180 M**	3560	59	✓	91.7	91.8	90.9	0.89	34	2.5	9	3.9	77	89	**1LE1523-1EA2** ■-■■■■	160	0.08
30	**40**	**200 L**	3560	80	✓	92.4	91.9	90.1	0.87	47	3	8.5	3.7	77	84	**1LE1523-2AA4** ■-■■■■	225	0.134
37	**50**	**200 L**	3560	99	✓	93	92.8	91.6	0.88	57	2.8	7.5	3.6	77	84	**1LE1523-2AA5** ■-■■■■	250	0.158
45	**60**	**225 M**	3570	120	✓	93.6	93.7	93.1	0.88	69	2.7	7.6	3.3	75	89	**1LE1523-2BA2** ■-■■■■	315	0.26
55	**75**	**250 M**	3578	147	✓	93.6	93.4	92.3	0.89	83	2.5	7.3	3.3	76	90	**1LE1523-2CA2** ■-■■■■	385	0.46
75	**100**	**280 S**	3578	200	✓	94.1	93.9	92.7	0.89	112	2.9	7.6	3.2	78	92	**1LE1523-2DA0** ■-■■■■	510	0.77
90	**125**	**280 M**	3578	240	✓	95	94.8	93.8	0.9	132	2.7	8.1	3.3	78	92	**1LE1523-2DA2** ■-■■■■	590	0.94
110	**150**	**315 S**	3585	295	✓	95	94.8	93.8	0.91	160	2.6	8	3.3	79	93	**1LE1523-3AA0** ■-■■■■	750	1.39
132	**175**	**315 M**	3585	350	✓	95.4	95.1	94	0.91	191	2.8	8	3.4	79	93	**1LE1523-3AA2** ■-■■■■	880	1.6
150	**200**	**315 L**	3588	400	✓	95.4	95.1	93.9	0.91	215	3.3	9.1	3.7	82	96	**1LE1523-3AA4** ■-■■■■	980	1.9
185	**250**	**315 L**	3586	495	✓	95.8	95.7	94.8	0.92	265	3.5	8.5	3.5	82	96	**1LE1523-3AA5** ■-■■■■	1150	2.3

Voltages (≤ 600 V) [1]		Version					Order code
50 Hz 230 VΔ/400 VY	60 Hz 460 VY	**Standard**	**2**	**2**			–
50 Hz 400 VΔ	60 Hz 460 VΔ	**Standard**	**3**	**4**			–
50 Hz 500 VY		Without additional charge	**2**	**7**			–
50 Hz 500 VΔ		Without additional charge	**4**	**0**			–
For other voltages and more information, see from page 3/104			**9**	**0**			...
Types of construction		Version					Order code
Without flange	IM B3 [2]	**Standard**		**A**			–
With flange	IM B5 [2]	With additional charge		**F**			–
With flange	IM B14 [2]	With additional charge		**K**			–
For other types of construction and more information, see from page 3/111				■			...
Motor protection		Version					Order code
Without		**Standard**			**A**		–
PTC thermistor with 3 temperature sensors		With additional charge			**B**		–
For other motor protection and more information, see from page 3/121					■		...
Terminal box position		Version					
Terminal box at top		**Standard**				**4**	
For other terminal box positions and more information, see from page 3/124						■	
Special versions							Order code(s)
Forced-air cooled motors w/o ext. fan/fan cover (IC418)			**1LE1523-....** ■-■■■■			**-Z**	**F90+...+...+...**
For options, see from page 3/132			**1LE1523-....** ■-■■■■			**-Z**	**...+...+...+...**

– Not required
✓ Available

[1] Operating voltages only ≤ 600 V admissible in accordance with MG1 Table 12-12. Parallel supply lines are required in the case of connection to ≤ 240 V. For frame size 315 with connection to ≤ 240 V, due to the high current, a drilled, removable entry plate (order code **R52**) or a larger terminal box (order code **R50**) can be used. Order codes **R52** and **R50** alter the motor dimensions.

[2] Types derived from IM B3 (IM B6/7/8, IM V6, and IM V5), from IM B5 (IM V3 and IM V1) and from IM B14 (IM V19 and IM V18) are possible, provided that no requirement exists for stamping of the type on the rating plate. The basic type IM B3, IM B5, or IM B14 is stamped as standard on the rating plate. If mounted in a different position, the position must be specified to ensure that the condensation drainage holes are positioned correctly.

© Innomotics 2024

Cast-iron series Innomotics SD 1LE1523 Basic Line – self-ventilated or forced-air cooled

Selection and ordering data

P_{rated}, 60 Hz/ P50 kW	P_{rated}, 60 Hz/ P60 hp	Frame size FS	Operating values at rated power: n_{rated}, 60 Hz rpm	T_{rated}, 60 Hz Nm	EISA CC No. CC032A	η_{rated}, 60 Hz, 4/4 %	η_{rated}, 60 Hz, 3/4 %	η_{rated}, 60 Hz, 2/4 %	$\cos\varphi_{rated}$, 60 Hz, 4/4	I_{rated}, 60 Hz, 460 V A	T_{LR}/T_{rated}, 60 Hz	I_{LR}/I_{rated}, 60 Hz	T_B/T_{rated}, 60 Hz	L_{pfA}, 60 Hz dB(A)	L_{WA}, 60 Hz dB(A)	Cast-iron series 1LE1523 – *Basic Line* Article No.	$m_{IM\ B3}$ kg	J kgm²
_ Cooling: Self-ventilated (IC411) or with order code F90 forced-air cooled without external fan and fan cover (IC418)																		
_ Efficiency: NEMA Premium Efficient, UL, CSA, and service factor (SF) 1.15 – for operation in the USA and Canada, NOM-certification is required for exporting to Mexico																		
_ Insulation: Thermal class 155 (temperature class F), IP55 degree of protection, utilization in accordance with thermal class 130 (temperature class B)																		
4-pole: 1500 rpm at 50 Hz, 1800 rpm at 60 Hz																		
0.25	**0.33**	**71 M**	1715	1.39	–	73.4	72.3	68	0.68	0.63	2.9	4.9	3.1	47	58	**1LE1523-0CB2** ■-■■■■	13	0.00095
0.37	**0.5**	**71 M**	1720	2.05	–	78.2	76.9	72.5	0.66	0.9	3.6	5.7	3.8	62	73	**1LE1523-0CB3** ■-■■■■	16	0.0014
0.55	**0.75**	**80 M**	1750	3	–	81.1	80.9	78.6	0.74	1.15	2.7	6.9	3.8	53	61	**1LE1523-0DB2** ■-■■■■	19	0.0021
0.75	**1**	**80 M**	1760	4.05	✓	83.5	82.6	79.7	0.71	1.59	3.1	8.3	4.7	58	66	**1LE1523-0DB3** ■-■■■■	23	0.0029
1.1	**1.5**	**90 S**	1750	6	✓	86.5	86.4	84.2	0.75	2.15	3.4	8.2	4.4	58	70	**1LE1523-0EB0** ■-■■■■	25	0.0036
1.5	**2**	**90 L**	1755	8.2	✓	86.5	86.6	84.7	0.77	2.85	3.4	8.6	4.3	59	67	**1LE1523-0EB4** ■-■■■■	31	0.0049
2.2	**3**	**100 L**	1760	11.9	✓	89.5	89.5	88	0.8	3.85	3.5	9.9	4.6	70	78	**1LE1523-1AB4** ■-■■■■	31	0.0101
3	**4**	**100 L**	1760	16.3	✓	89.5	89.4	88	0.78	5.4	3.5	9.9	4.7	70	78	**1LE1523-1AB5** ■-■■■■	40	0.01
3.7	**5**	**112 M**	1770	20	✓	89.5	90	88.3	0.8	6.5	2.9	8.2	4.3	62	74	**1LE1523-1BB2** ■-■■■■	40	0.017
5.5	**7.5**	**132 S**	1775	29.5	✓	91.7	91.6	90.5	0.81	9.3	3.1	10	4.2	68	80	**1LE1523-1CB0** ■-■■■■	74	0.034
7.5	**10**	**132 M**	1770	40.5	✓	91.7	91.6	90.6	0.79	13	3.4	9.8	4.3	68	76	**1LE1523-1CB2** ■-■■■■	80	0.0334
11	**15**	**160 M**	1775	59	✓	92.4	92.6	92	0.81	18.4	3.8	9	4	70	78	**1LE1523-1DB2** ■-■■■■	105	0.0583
15	**20**	**160 L**	1775	81	✓	93	92.9	92.1	0.81	25	3.1	8.9	3.8	66	74	**1LE1523-1DB4** ■-■■■■	133	0.089
18.5	**25**	**180 M**	1775	100	✓	93.6	93.7	93.1	0.81	30.5	2.7	7.8	3.6	68	75	**1LE1523-1EB2** ■-■■■■	165	0.13
22	**30**	**180 L**	1775	118	✓	93.6	93.8	93.3	0.81	36.5	2.8	7.7	3.7	70	77	**1LE1523-1EB4** ■-■■■■	170	0.14
30	**40**	**200 L**	1778	161	✓	94.1	94.2	93.6	0.83	48	2.6	8.8	3.5	70	77	**1LE1523-2AB5** ■-■■■■	240	0.24
37	**50**	**225 S**	1782	198	✓	94.5	94.7	94.2	0.85	58	2.8	7.5	3	68	82	**1LE1523-2BB0** ■-■■■■	285	0.42
45	**60**	**225 M**	1782	240	✓	95	95.3	95.1	0.85	70	3	7.7	3	67	81	**1LE1523-2BB2** ■-■■■■	340	0.52
55	**75**	**250 M**	1786	295	✓	95.4	95.6	95.1	0.86	84	2.8	7.6	3.2	68	82	**1LE1523-2CB2** ■-■■■■	420	0.85
75	**100**	**280 S**	1788	400	✓	95.4	95.3	94.5	0.85	116	2.8	7.7	3.3	77	91	**1LE1523-2DB0** ■-■■■■	570	1.39
90	**125**	**280 M**	1788	480	✓	95.4	95.5	94.9	0.87	136	2.9	8	3.3	79	93	**1LE1523-2DB2** ■-■■■■	670	1.7
110	**150**	**315 S**	1790	590	✓	95.8	95.9	95.4	0.86	168	3	7.5	3.1	74	88	**1LE1523-3AB0** ■-■■■■	760	2.2
132	**175**	**315 M**	1790	700	✓	96.2	96.3	95.8	0.87	198	3.1	8.2	3.2	78	92	**1LE1523-3AB2** ■-■■■■	960	2.9
150	**200**	**315 L**	1791	800	✓	96.2	96.2	95.7	0.87	225	3.5	8.8	3.6	78	92	**1LE1523-3AB4** ■-■■■■	990	3.1
185	**250**	**315 L**	1791	990	✓	96.2	96.2	95.5	0.87	275	3.9	9	3.6	78	93	**1LE1523-3AB5** ■-■■■■	1190	3.7

Voltages (≤ 600 V) [1]		Version						Order code
50 Hz 230 VΔ/400 VY	60 Hz 460 VY	**Standard**	**2**	**2**				–
50 Hz 400 VΔ	60 Hz 460 VΔ	**Standard**	**3**	**4**				–
50 Hz 500 VY		Without additional charge	**2**	**7**				–
50 Hz 500 VΔ		Without additional charge	**4**	**0**				–
For other voltages and more information, see from page 3/104			**9**	**0**				**...**
Types of construction		Version						Order code
Without flange	IM B3 [2]	**Standard**			**A**			–
With flange	IM B5 [2]	With additional charge			**F**			–
With flange	IM B14 [2]	With additional charge			**K**			–
For other types of construction and more information, see from page 3/111					■			**...**
Motor protection		Version						Order code
Without		**Standard**				**A**		–
PTC thermistor with 3 temperature sensors		With additional charge				**B**		–
For other motor protection and more information, see from page 3/121						■		**...**
Terminal box position		Version						
Terminal box at top		**Standard**					**4**	
For other terminal box positions and more information, see from page 3/124							■	
Special versions								Order code(s)
Forced-air cooled motors w/o ext. fan/fan cover (IC418)		**1LE1523-....** ■-■■■■ -Z						**F90+...+...+...**
For options, see from page 3/132		**1LE1523-....** ■-■■■■ -Z						**...+...+...+...**

– Not required
✓ Available

[1] Operating voltages only ≤ 600 V admissible in accordance with MG1 Table 12-12. Parallel supply lines are required in the case of connection to ≤ 240 V. For frame size 315 with connection to ≤ 240 V, due to the high current, a drilled, removable entry plate (order code **R52**) or a larger terminal box (order code **R50**) can be used. Order codes **R52** and **R50** alter the motor dimensions.

[2] Types derived from IM B3 (IM B6/7/8, IM V6 and IM V5), from IM B5 (IM V3 and IM V1) and from IM B14 (IM V19 and IM V18) are possible, provided that no requirement exists for stamping of the type on the rating plate. The basic type IM B3, IM B5, or IM B14 is stamped as standard on the rating plate. If mounted in a different position, the position must be specified to ensure that the condensation drainage holes are positioned correctly.

© Innomotics 2024

Cast-iron series Innomotics SD 1LE1523 Basic Line – self-ventilated or forced-air cooled

Selection and ordering data

P_{rated}, 60 Hz/ P50 kW	P_{rated}, 60 Hz/ P60 hp	Frame size FS	Operating values at rated power n_{rated}, 60 Hz rpm	T_{rated}, 60 Hz Nm	EISA CC No. CC032A	η_{rated}, 60 Hz, 4/4 %	η_{rated}, 60 Hz, 3/4 %	η_{rated}, 60 Hz, 2/4 %	$\cos\varphi_{rated}$, 60 Hz, 4/4	I_{rated}, 60 Hz, 460 V A	T_{LR}/T_{rated}, 60 Hz	I_{LR}/I_{rated}, 60 Hz	T_B/T_{rated}, 60 Hz	L_{pfA}, 60 Hz dB(A)	L_{WA}, 60 Hz dB(A)	Cast-iron series 1LE1523 – *Basic Line* Article No.	$m_{IM\ B3}$ kg	J kgm²
_ Cooling: Self-ventilated (IC411) or with order code F90 forced-air cooled without external fan and fan cover (IC418)																		
_ Efficiency: NEMA Premium Efficient, UL, CSA, and service factor (SF) 1.15 – for operation in the USA and Canada, NOM-certification is required for exporting to Mexico																		
_ Insulation: Thermal class 155 (temperature class F), IP55 degree of protection, utilization in accordance with thermal class 130 (temperature class B)																		
6-pole: 1000 rpm at 50 Hz, 1200 rpm at 60 Hz																		
0.18	**0.25**	**71 M**	1110	1.55	–	67.5	66.3	61	0.63	0.53	2.8	3.5	2.9	42	53	**1LE1523-0CC2** ■-■■■■	13	0.00098
0.25	**0.33**	**71 M**	1110	2.15	–	71.4	70.6	66.4	0.64	0.69	3.2	3.9	3.2	48	59	**1LE1523-0CC3** ■-■■■■	16	0.0014
0.37	**0.5**	**80 M**	1150	3.05	–	75.3	74.3	70	0.61	1.01	2.7	5	3.3	45	56	**1LE1523-0DC2** ■-■■■■	19	0.0025
0.55	**0.75**	**80 M**	1145	4.6	–	81.7	80.5	76.4	0.63	1.34	2.8	5.3	3.4	45	56	**1LE1523-0DC3** ■-■■■■	23	0.0031
0.75	**1**	**90 S**	1155	6.2	✓	82.5	82.4	79.9	0.65	1.76	2.4	5.3	3.1	46	58	**1LE1523-0EC0** ■-■■■■	27	0.004
3	**4**	**132 S**	1180	24.5	✓	89.5	89.5	87.9	0.7	6	2.6	7.6	3.8	62	70	**1LE1523-1CC0** ■-■■■■	60	0.037
3.7	**5**	**132 M**	1180	30	✓	89.5	89.2	87.5	0.69	7.5	2.8	7.5	3.8	64	72	**1LE1523-1CC2** ■-■■■■	64	0.037
5.5	**7.5**	**132 M**	1180	44.5	✓	91	90.8	89.2	0.69	11	3	7.8	4	69	77	**1LE1523-1CC3** ■-■■■■	76	0.046
7.5	**10**	**160 M**	1185	60	✓	91	90.8	89.4	0.8	12.9	2.7	9.3	3.7	75	83	**1LE1523-1DC2** ■-■■■■	124	0.098
11	**15**	**160 L**	1185	89	✓	91.7	91.7	90.5	0.78	19.3	3.4	8	3.2	73	81	**1LE1523-1DC4** ■-■■■■	138	0.12
15	**20**	**180 L**	1178	122	✓	91.7	92	91.4	0.79	26	2.5	6.8	3	61	68	**1LE1523-1EC4** ■-■■■■	180	0.19
18.5	**25**	**200 L**	1180	150	✓	93	93.8	93.8	0.78	32	2.8	6.5	3	64	71	**1LE1523-2AC4** ■-■■■■	215	0.28
22	**30**	**200 L**	1180	178	✓	93	93.5	93.4	0.79	37.5	2.6	6.3	2.8	63	70	**1LE1523-2AC5** ■-■■■■	230	0.32
30	**40**	**225 M**	1185	240	✓	94.1	94.4	94.1	0.82	49	2.9	7.6	3.3	66	80	**1LE1523-2BC2** ■-■■■■	325	0.67
37	**50**	**250 M**	1188	295	✓	94.1	94.4	93.9	0.83	59	3.1	8	3.1	63	76	**1LE1523-2CC2** ■-■■■■	405	1
45	**60**	**280 S**	1190	360	✓	94.5	94.6	94.1	0.83	72	3.3	7.7	3.1	66	80	**1LE1523-2DC0** ■-■■■■	510	1.4
55	**75**	**280 M**	1190	440	✓	94.5	94.6	93.9	0.84	87	3.6	9.2	3.3	66	80	**1LE1523-2DC2** ■-■■■■	560	1.64
75	**100**	**315 S**	1192	600	✓	95	94.9	94.1	0.82	121	3.1	8.4	3.3	64	79	**1LE1523-3AC0** ■-■■■■	750	2.6
90	**125**	**315 M**	1192	720	✓	95	95	94.4	0.84	142	2.7	7.7	3	64	79	**1LE1523-3AC2** ■-■■■■	890	3.1
110	**150**	**315 L**	1192	880	✓	95.8	95.9	95.5	0.83	174	3.2	8.2	3.4	64	79	**1LE1523-3AC4** ■-■■■■	990	3.9
132	**175**	**315 L**	1193	1060	✓	95.8	95.9	95.4	0.81	215	3.7	9.6	3.7	65	80	**1LE1523-3AC5** ■-■■■■	1130	4.48
150	**200**	**315 L**	1194	1200	✓	95.8	95.7	95	0.8	245	4.3	11	4.3	68	83	**1LE1523-3AC6** ■-■■■■	1260	5.41

Voltages (≤ 600 V) [1]		Version					Order code
50 Hz 230 VΔ/400 VY	60 Hz 460 VY	**Standard**	**2**	**2**			–
50 Hz 400 VΔ	60 Hz 460 VΔ	**Standard**	**3**	**4**			–
50 Hz 500 VY		Without additional charge	**2**	**7**			–
50 Hz 500 VΔ		Without additional charge	**4**	**0**			–
For other voltages and more information, see from page 3/104			**9**	**0**			**...**
Types of construction		Version					Order code
Without flange	IM B3 [2]	**Standard**		**A**			–
With flange	IM B5 [2]	With additional charge		**F**			–
With flange	IM B14 [2]	With additional charge		**K**			–
For other types of construction and more information, see from page 3/111				■			**...**
Motor protection		Version					Order code
Without		**Standard**			**A**		–
PTC thermistor with 3 temperature sensors		With additional charge			**B**		–
For other motor protection and more information, see from page 3/121					■		**...**
Terminal box position		Version					
Terminal box at top		**Standard**				**4**	
For other terminal box positions and more information, see from page 3/124						■	
Special versions							Order code(s)
Forced-air cooled motors w/o ext. fan/fan cover (IC418)			**1LE1523-....** ■-■■■■			**-Z**	**F90+...+...+...**
For options, see from page 3/132			**1LE1523-....** ■-■■■■			**-Z**	**...+...+...+...**

– Not required
✓ Available

[1] Operating voltages only ≤ 600 V admissible in accordance with MG1 Table 12-12. Parallel supply lines are required in the case of connection to ≤ 240 V. For frame size 315 with connection to ≤ 240 V, due to the high current, a drilled, removable entry plate (order code **R52**) or a larger terminal box (order code **R50**) can be used. Order codes **R52** and **R50** alter the motor dimensions.

[2] Types derived from IM B3 (IM B6/7/8, IM V6 and IM V5), from IM B5 (IM V3 and IM V1) and from IM B14 (IM V19 and IM V18) are possible, provided that no requirement exists for stamping of the type on the rating plate. The basic type IM B3, IM B5, or IM B14 is stamped as standard on the rating plate. If mounted in a different position, the position must be specified to ensure that the condensation drainage holes are positioned correctly.

© Innomotics 2024

Cast-iron series Innomotics SD 1LE1523 Basic Line – self-ventilated or forced-air cooled

Selection and ordering data

P_{rated}, 60 Hz/ P50	P_{rated}, 60 Hz/ P60	Frame size	Operating values at rated power n_{rated}, 60 Hz	T_{rated}, 60 Hz	EISA CC No. CC032A	η_{rated}, 60 Hz, 4/4	η_{rated}, 60 Hz, 3/4	η_{rated}, 60 Hz, 2/4	$\cos\varphi_{rated}$, 60 Hz, 4/4	I_{rated}, 60 Hz, 460 V	T_{LR}/T_{rated}, 60 Hz	I_{LR}/I_{rated}, 60 Hz	T_B/T_{rated}, 60 Hz	L_{pfA}, 60 Hz	L_{WA}, 60 Hz	Cast-iron series 1LE1523 – *Basic Line* Article No.		$m_{IM\ B3}$	J
kW	hp	FS	rpm	Nm		%	%	%		A				dB(A)	dB(A)			kg	kgm^2
_ Cooling: Self-ventilated (IC411) or with order code F90 forced-air cooled without external fan and fan cover (IC418)																			
_ Efficiency: NEMA Premium Efficient, UL, CSA, and service factor (SF) 1.15 – for operation in the USA and Canada, NOM-certification is required for exporting to Mexico																			
_ Insulation: Thermal class 155 (temperature class F), IP55 degree of protection, utilization in accordance with thermal class 130 (temperature class B)																			
8-pole: 750 rpm at 50 Hz, 900 rpm at 60 Hz																			
0.09	**0.12**	**71 M**	825	1.04	–	57.1	53.7	45.8	0.55	0.36	2.3	2.6	2.4	45	57	**1LE1523-0CD2**	■-■■■■	13	0.00098
0.12	**0.17**	**71 M**	830	1.38	–	59.5	56.9	50.3	0.56	0.45	2.6	2.9	2.7	49	56	**1LE1523-0CD3**	■-■■■■	16	0.0014
0.18	**0.24**	**80 M**	865	1.99	–	64	60.6	53	0.44	0.78	2.6	3.5	3.5	55	68	**1LE1523-0DD2**	■-■■■■	18	0.0021
0.25	**0.33**	**80 M**	855	2.8	–	68	65.5	59.8	0.51	0.91	2	3.3	2.6	56	64	**1LE1523-0DD3**	■-■■■■	22	0.003
0.37	**0.5**	**90 S**	850	4.15	–	72	69.9	64.2	0.63	1.02	2	3.4	2.1	54	61	**1LE1523-0ED0**	■-■■■■	26	0.0045
0.55	**0.75**	**90 L**	855	6.1	–	74	71.6	65.8	0.62	1.5	2.3	4	2.8	59	66	**1LE1523-0ED4**	■-■■■■	26	0.0045
0.75	**1**	**100 L**	870	8.2	–	75.5	74.9	71.7	0.62	1.87	1.9	4.4	2.5	64	72	**1LE1523-1AD4**	■-■■■■	31	0.0096
1.1	**1.5**	**100 L**	865	12.1	–	78.5	78	75.7	0.62	2.7	2.3	4.8	3	65	73	**1LE1523-1AD5**	■-■■■■	36	0.013
1.5	**2**	**112 M**	875	16.4	–	84	83.1	80	0.59	3.75	2.9	5.8	3.6	65	73	**1LE1523-1BD2**	■-■■■■	46	0.028

Voltages (≤ 600 V) [1]		Version					Order code
50 Hz 230 VΔ/400 VY	60 Hz 460 VY	**Standard**	**2**	**2**			–
50 Hz 400 VΔ	60 Hz 460 VΔ	**Standard**	**3**	**4**			–
50 Hz 500 VY		Without additional charge	**2**	**7**			–
50 Hz 500 VΔ		Without additional charge	**4**	**0**			–
For other voltages and more information, see from page 3/104			**9**	**0**			**...**
Types of construction		Version					Order code
Without flange	IM B3 [2]	**Standard**		**A**			–
With flange	IM B5 [2]	With additional charge		**F**			–
With flange	IM B14 [2]	With additional charge		**K**			–
For other types of construction and more information, see from page 3/111				■			**...**
Motor protection		Version					Order code
Without		**Standard**			**A**		–
PTC thermistor with 3 temperature sensors		With additional charge			**B**		–
For other motor protection and more information, see from page 3/121					■		**...**
Terminal box position		Version					
Terminal box at top		**Standard**				**4**	
For other terminal box positions and more information, see from page 3/124						■	
Special versions							Order code(s)
Forced-air cooled motors w/o ext. fan/fan cover (IC418)		**1LE1523- ....**	■-■■■■			**-Z**	**F90+...+...+...**
For options, see from page 3/132		**1LE1523- ....**	■-■■■■			**-Z**	**...+...+...+...**

– Not required

[1] Operating voltages only ≤ 600 V admissible in accordance with MG1 Table 12-12. Parallel supply lines are required in the case of connection to ≤ 240 V. For frame size 315 with connection to ≤ 240 V, due to the high current, a drilled, removable entry plate (order code **R52**) or a larger terminal box (order code **R50**) can be used. Order codes **R52** and **R50** alter the motor dimensions.

[2] Types derived from IM B3 (IM B6/7/8, IM V6, and IM V5), from IM B5 (IM V3 and IM V1) and from IM B14 (IM V19 and IM V18) are possible, provided that no requirement exists for stamping of the type on the rating plate. The basic type IM B3, IM B5, or IM B14 is stamped as standard on the rating plate. If mounted in a different position, the position must be specified to ensure that the condensation drainage holes are positioned correctly.

© Innomotics 2024

Innomotics GP and Innomotics SD standard motors

Cast-iron series Innomotics SD 1LE1623 Performance Line – self-ventilated or forced-air cooled

Selection and ordering data

P_{rated}, 60 Hz/ P50	P_{rated}, 60 Hz/ P60	Frame size	Operating values at rated power η_{rated}, 60 Hz	T_{rated}, 60 Hz	EISA CC No. CC032A	η_{rated}, 60 Hz, 4/4	η_{rated}, 60 Hz, 3/4	η_{rated}, 60 Hz, 2/4	$\cos\varphi_{rated}$, 60 Hz, 4/4	I_{rated}, 60 Hz, 460 V	T_{LR}/T_{rated}, 60 Hz	I_{LR}/I_{rated}, 60 Hz	T_B/T_{rated}, 60 Hz	L_{pfA}, 60 Hz	L_{WA}, 60 Hz	Cast-iron series 1LE1623 – *Performance Line* Article No.				$m_{IM\ B3}$	J
kW	hp	FS	rpm	Nm		%	%	%		A				dB(A)	dB(A)					kg	kgm²
_ Cooling: Self-ventilated (IC411) or with order code F90 forced-air cooled without external fan and fan cover (IC418)																					
_ Efficiency: NEMA Premium Efficient, UL, CSA, and service factor (SF) 1.15 – for operation in the USA and Canada, NOM-certification is required for exporting to Mexico																					
_ Insulation: Thermal class 155 (temperature class F), IP55 degree of protection, utilization in accordance with thermal class 130 (temperature class B)																					
2-pole: 3000 rpm at 50 Hz, 3600 rpm at 60 Hz																					
3	**4**	**100 L**	3525	8.1	✓	88.5	88.2	86.7	0.85	5	4.6	11.2	5.6	75	83	**1LE1623-1AA4**	■	- ■ ■ ■ ■		37	0.0041
3.7	**5**	**112 M**	3555	9.9	✓	88.5	88.4	86.7	0.87	6	3.3	11.8	4.7	80	88	**1LE1623-1BA2**	■	- ■ ■ ■ ■		41	0.0079
5.5	**7.5**	**132 S**	3550	14.8	✓	89.5	89	87	0.87	8.9	3	11.1	4.6	74	82	**1LE1623-1CA0**	■	- ■ ■ ■ ■		66	0.0168
7.5	**10**	**132 S**	3555	20	✓	90.2	90.5	90	0.91	11.5	2.4	9.5	4.7	72	84	**1LE1623-1CA1**	■	- ■ ■ ■ ■		73	0.031
11	**15**	**160 M**	3555	29.5	✓	91	90.4	88.4	0.88	17.2	2.9	9.5	4	82	90	**1LE1623-1DA2**	■	- ■ ■ ■ ■		100	0.037
15	**20**	**160 M**	3560	40	✓	91	90.4	88.5	0.86	24	4	11.8	5.2	81	89	**1LE1623-1DA3**	■	- ■ ■ ■ ■		104	0.043
18.5	**25**	**160 L**	3560	49.5	✓	91.7	91.5	90.3	0.9	28	3.1	9.4	4.4	77	89	**1LE1623-1DA4**	■	- ■ ■ ■ ■		127	0.068
22	**30**	**180 M**	3560	59	✓	91.7	91.8	90.9	0.89	34	2.5	9	3.9	77	89	**1LE1623-1EA2**	■	- ■ ■ ■ ■		160	0.08
30	**40**	**200 L**	3560	80	✓	92.4	91.9	90.1	0.87	47	3	8.5	3.7	77	84	**1LE1623-2AA4**	■	- ■ ■ ■ ■		225	0.134
37	**50**	**200 L**	3560	99	✓	93	92.8	91.6	0.88	57	2.8	7.5	3.6	77	84	**1LE1623-2AA5**	■	- ■ ■ ■ ■		250	0.158
45	**60**	**225 M**	3570	120	✓	93.6	93.7	93.1	0.88	69	2.7	7.6	3.3	75	89	**1LE1623-2BA2**	■	- ■ ■ ■ ■		315	0.26
55	**75**	**250 M**	3578	147	✓	93.6	93.4	92.3	0.89	83	2.5	7.3	3.3	76	90	**1LE1623-2CA2**	■	- ■ ■ ■ ■		385	0.46
75	**100**	**280 S**	3578	200	✓	94.1	93.9	92.7	0.89	112	2.9	7.6	3.2	78	92	**1LE1623-2DA0**	■	- ■ ■ ■ ■		510	0.77
90	**125**	**280 M**	3578	240	✓	95	94.8	93.8	0.9	132	2.7	8.1	3.3	78	92	**1LE1623-2DA2**	■	- ■ ■ ■ ■		590	0.94
110	**150**	**315 S**	3585	295	✓	95	94.8	93.8	0.91	160	2.6	8	3.3	79	93	**1LE1623-3AA0**	■	- ■ ■ ■ ■		750	1.39
132	**175**	**315 M**	3585	350	✓	95.4	95.1	94	0.91	191	2.8	8	3.4	79	93	**1LE1623-3AA2**	■	- ■ ■ ■ ■		880	1.6
150	**200**	**315 L**	3588	400	✓	95.4	95.1	93.9	0.91	215	3.3	9.1	3.7	82	96	**1LE1623-3AA4**	■	- ■ ■ ■ ■		980	1.9
185	**250**	**315 L**	3586	495	✓	95.8	95.7	94.8	0.92	265	3.5	8.5	3.5	82	96	**1LE1623-3AA5**	■	- ■ ■ ■ ■		1150	2.3

Voltages (≤ 600 V) [1]		Version					Order code
50 Hz 230 VΔ/400 VY	60 Hz 460 VY	**Standard**	**2**	**2**			–
50 Hz 400 VΔ	60 Hz 460 VΔ	**Standard**	**3**	**4**			–
50 Hz 500 VY		Without additional charge	**2**	**7**			–
50 Hz 500 VΔ		Without additional charge	**4**	**0**			–
For other voltages and more information, see from page 3/104			**9**	**0**			**...**
Types of construction		Version					Order code
Without flange	IM B3 [2]	**Standard**			**A**		–
With flange	IM B5 [2]	With additional charge			**F**		–
With flange	IM B14 [2]	With additional charge			**K**		–
For other types of construction and more information, see from page 3/111					■		**...**
Motor protection		Version					Order code
PTC thermistor with 3 temperature sensors		**Standard**				**B**	–
For other motor protection and more information, see from page 3/121						■	**...**
Terminal box position		Version					
Terminal box at top		**Standard**					**4**
For other terminal box positions and more information, see from page 3/124							■
Special versions							Order code(s)
Forced-air cooled motors w/o ext. fan/fan cover (IC418)		**1LE1623- . . . .** ■ - ■ ■ ■ ■ -Z					**F90+...+...+...**
For options, see from page 3/132		**1LE1623- . . . .** ■ - ■ ■ ■ ■ -Z					**...+...+...+...**

– Not required
✓ Available

[1] Operating voltages only ≤ 600 V admissible in accordance with MG1 Table 12-12. Parallel supply lines are required in the case of connection to ≤ 240 V. For frame size 315 with connection to ≤ 240 V, due to the high current, a drilled, removable entry plate (order code **R52**) or a larger terminal box (order code **R50**) can be used. Order codes **R52** and **R50** alter the motor dimensions.

[2] Types derived from IM B3 (IM B6/7/8, IM V6, and IM V5), from IM B5 (IM V3 and IM V1) and from IM B14 (IM V19 and IM V18) are possible, provided that no requirement exists for stamping of the type on the rating plate. The basic type IM B3, IM B5, or IM B14 is stamped as standard on the rating plate. If mounted in a different position, the position must be specified to ensure that the condensation drainage holes are positioned correctly.

© Innomotics 2024

Cast-iron series Innomotics SD 1LE1623 Performance Line – self-ventilated or forced-air cooled

Selection and ordering data

P_{rated}, 60 Hz/ P50 kW	P_{rated}, 60 Hz/ P60 hp	Frame size FS	Operating values at rated power n_{rated}, 60 Hz rpm	T_{rated}, 60 Hz Nm	EISA CC No. CC032A	η_{rated}, 60 Hz, 4/4 %	η_{rated}, 60 Hz, 3/4 %	η_{rated}, 60 Hz, 2/4 %	$\cos\varphi_{rated}$, 60 Hz, 4/4	I_{rated}, 60 Hz, 460 V A	T_{LR}/T_{rated}, 60 Hz	I_{LR}/I_{rated}, 60 Hz	T_B/T_{rated}, 60 Hz	L_{pfA}, 60 Hz dB(A)	L_{WA}, 60 Hz dB(A)	Cast-iron series 1LE1623 – *Performance Line* Article No.	$m_{IM\ B3}$ kg	J kgm²
_ Cooling: Self-ventilated (IC411) or with order code F90 forced-air cooled without external fan and fan cover (IC418)																		
_ Efficiency: NEMA Premium Efficient, UL, CSA, and service factor (SF) 1.15 – for operation in the USA and Canada, NOM-certification is required for exporting to Mexico																		
_ Insulation: Thermal class 155 (temperature class F), IP55 degree of protection, utilization in accordance with thermal class 130 (temperature class B)																		
4-pole: 1500 rpm at 50 Hz, 1800 rpm at 60 Hz																		
2.2	**3**	**100 L**	1760	11.9	✓	89.5	89.5	88	0.8	3.85	3.5	9.9	4.6	70	78	**1LE1623-1AB4** ■-■■■■	31	0.0101
3	**4**	**100 L**	1760	16.3	✓	89.5	89.4	88	0.78	5.4	3.5	9.9	4.7	70	78	**1LE1623-1AB5** ■-■■■■	40	0.01
3.7	**5**	**112 M**	1770	20	✓	89.5	90	88.3	0.8	6.5	2.9	8.2	4.3	62	74	**1LE1623-1BB2** ■-■■■■	40	0.017
5.5	**7.5**	**132 S**	1775	29.5	✓	91.7	91.6	90.5	0.81	9.3	3.1	10	4.2	68	80	**1LE1623-1CB0** ■-■■■■	74	0.034
7.5	**10**	**132 M**	1770	40.5	✓	91.7	91.6	90.6	0.79	13	3.4	9.8	4.3	68	76	**1LE1623-1CB2** ■-■■■■	80	0.0334
11	**15**	**160 M**	1775	59	✓	92.4	92.6	92	0.81	18.4	3.8	9	4	70	78	**1LE1623-1DB2** ■-■■■■	105	0.0583
15	**20**	**160 L**	1775	81	✓	93	92.9	92.1	0.81	25	3.1	8.9	3.8	66	74	**1LE1623-1DB4** ■-■■■■	133	0.089
18.5	**25**	**180 M**	1775	100	✓	93.6	93.7	93.1	0.81	30.5	2.7	7.8	3.6	68	75	**1LE1623-1EB2** ■-■■■■	165	0.13
22	**30**	**180 L**	1775	118	✓	93.6	93.8	93.3	0.81	36.5	2.8	7.7	3.7	70	77	**1LE1623-1EB4** ■-■■■■	170	0.14
30	**40**	**200 L**	1778	161	✓	94.1	94.2	93.6	0.83	48	2.6	8.8	3.5	70	77	**1LE1623-2AB5** ■-■■■■	240	0.24
37	**50**	**225 S**	1782	198	✓	94.5	94.7	94.2	0.85	58	2.8	7.5	3	68	82	**1LE1623-2BB0** ■-■■■■	285	0.42
45	**60**	**225 M**	1782	240	✓	95	95.3	95.1	0.85	70	3	7.7	3	67	81	**1LE1623-2BB2** ■-■■■■	340	0.52
55	**75**	**250 M**	1786	295	✓	95.4	95.6	95.1	0.86	84	2.8	7.6	3.2	68	82	**1LE1623-2CB2** ■-■■■■	420	0.85
75	**100**	**280 S**	1788	400	✓	95.4	95.3	94.5	0.85	116	2.8	7.7	3.3	77	91	**1LE1623-2DB0** ■-■■■■	570	1.39
90	**125**	**280 M**	1788	480	✓	95.4	95.5	94.9	0.87	136	2.9	8	3.3	79	93	**1LE1623-2DB2** ■-■■■■	670	1.7
110	**150**	**315 S**	1790	590	✓	95.8	95.9	95.4	0.86	168	3	7.5	3.1	74	88	**1LE1623-3AB0** ■-■■■■	760	2.2
132	**175**	**315 M**	1790	700	✓	96.2	96.3	95.8	0.87	198	3.1	8.2	3.2	78	92	**1LE1623-3AB2** ■-■■■■	960	2.9
150	**200**	**315 L**	1791	800	✓	96.2	96.2	95.7	0.87	225	3.5	8.8	3.6	78	92	**1LE1623-3AB4** ■-■■■■	990	3.1
185	**250**	**315 L**	1791	990	✓	96.2	96.2	95.5	0.87	275	3.9	9	3.6	78	93	**1LE1623-3AB5** ■-■■■■	1190	3.7

Voltages (≤ 600 V) [1]		Version						Order code
50 Hz 230 VΔ/400 VY	60 Hz 460 VY	**Standard**	**2**	**2**				–
50 Hz 400 VΔ	60 Hz 460 VΔ	**Standard**	**3**	**4**				–
50 Hz 500 VY		Without additional charge	**2**	**7**				–
50 Hz 500 VΔ		Without additional charge	**4**	**0**				–
For other voltages and more information, see from page 3/104			**9**	**0**				**...**
Types of construction		Version						Order code
Without flange	IM B3 [2]	**Standard**		**A**				–
With flange	IM B5 [2]	With additional charge		**F**				–
With flange	IM B14 [2]	With additional charge		**K**				–
For other types of construction and more information, see from page 3/111				■				**...**
Motor protection		Version						Order code
PTC thermistor with 3 temperature sensors		**Standard**			**B**			–
For other motor protection and more information, see from page 3/121					■			**...**
Terminal box position		Version						
Terminal box at top		**Standard**				**4**		
For other terminal box positions and more information, see from page 3/124						■		
Special versions								Order code(s)
Forced-air cooled motors w/o ext. fan/fan cover (IC418)			**1LE1623-....**	■-■■■■			**-Z**	**F90+...+...+...**
For options, see from page 3/132			**1LE1623-....**	■-■■■■			**-Z**	**...+...+...+...**

– Not required
✓ Available

[1] Operating voltages only ≤ 600 V admissible in accordance with MG1 Table 12-12. Parallel supply lines are required in the case of connection to ≤ 240 V. For frame size 315 with connection to ≤ 240 V, due to the high current, a drilled, removable entry plate (order code **R52**) or a larger terminal box (order code **R50**) can be used. Order codes **R52** and **R50** alter the motor dimensions.

[2] Types derived from IM B3 (IM B6/7/8, IM V6 and IM V5), from IM B5 (IM V3 and IM V1) and from IM B14 (IM V19 and IM V18) are possible, provided that no requirement exists for stamping of the type on the rating plate. The basic type IM B3, IM B5, or IM B14 is stamped as standard on the rating plate. If mounted in a different position, the position must be specified to ensure that the condensation drainage holes are positioned correctly.

© Innomotics 2024

Innomotics GP and Innomotics SD standard motors

Cast-iron series Innomotics SD 1LE1623 Performance Line – self-ventilated or forced-air cooled

Selection and ordering data

P_{rated}, 60 Hz/ P50	P_{rated}, 60 Hz/ P60	Frame size	Operating values at rated power n_{rated}, 60 Hz	T_{rated}, 60 Hz	EISA CC No. CC032A	η_{rated}, 60 Hz, 4/4	η_{rated}, 60 Hz, 3/4	η_{rated}, 60 Hz, 2/4	$\cos\varphi_{rated}$, 60 Hz, 4/4	I_{rated}, 60 Hz, 460 V	T_{LR}/T_{rated}, 60 Hz	I_{LR}/I_{rated}, 60 Hz	T_B/T_{rated}, 60 Hz	L_{pfA}, 60 Hz	L_{WA}, 60 Hz	Cast-iron series 1LE1623 – *Performance Line* Article No.	$m_{IM\ B3}$	J
kW	hp	FS	rpm	Nm		%	%	%		A				dB(A)	dB(A)		kg	kgm²
_ Cooling: Self-ventilated (IC411) or with order code F90 forced-air cooled without external fan and fan cover (IC418)																		
_ Efficiency: NEMA Premium Efficient, UL, CSA, and service factor (SF) 1.15 – for operation in the USA and Canada, NOM-certification is required for exporting to Mexico																		
_ Insulation: Thermal class 155 (temperature class F), IP55 degree of protection, utilization in accordance with thermal class 130 (temperature class B)																		
6-pole: 1000 rpm at 50 Hz, 1200 rpm at 60 Hz																		
3	**4**	**132 S**	1180	24.5	✓	89.5	89.5	87.9	0.7	6	2.6	7.6	3.8	62	70	**1LE1623-1CC0** ■-■■■■	60	0.037
3.7	**5**	**132 M**	1180	30	✓	89.5	89.2	87.5	0.69	7.5	2.8	7.5	3.8	64	72	**1LE1623-1CC2** ■-■■■■	64	0.037
5.5	**7.5**	**132 M**	1180	44.5	✓	91	90.8	89.2	0.69	11	3	7.8	4	69	77	**1LE1623-1CC3** ■-■■■■	76	0.046
7.5	**10**	**160 M**	1185	60	✓	91	90.8	89.4	0.8	12.9	2.7	9.3	3.7	75	83	**1LE1623-1DC2** ■-■■■■	124	0.098
11	**15**	**160 L**	1185	89	✓	91.7	91.7	90.5	0.78	19.3	3.4	8	3.2	73	81	**1LE1623-1DC4** ■-■■■■	138	0.12
15	**20**	**180 L**	1178	122	✓	91.7	92	91.4	0.79	26	2.5	6.8	3	61	68	**1LE1623-1EC4** ■-■■■■	180	0.19
18.5	**25**	**200 L**	1180	150	✓	93	93.8	93.8	0.78	32	2.8	6.5	3	64	71	**1LE1623-2AC4** ■-■■■■	215	0.28
22	**30**	**200 L**	1180	178	✓	93	93.5	93.4	0.79	37.5	2.6	6.3	2.8	63	70	**1LE1623-2AC5** ■-■■■■	230	0.32
30	**40**	**225 M**	1185	240	✓	94.1	94.4	94.1	0.82	49	2.9	7.6	3.3	66	80	**1LE1623-2BC2** ■-■■■■	325	0.67
37	**50**	**250 M**	1188	295	✓	94.1	94.4	93.9	0.83	59	3.1	8	3.1	63	76	**1LE1623-2CC2** ■-■■■■	405	1
45	**60**	**280 S**	1190	360	✓	94.5	94.6	94.1	0.83	72	3.3	7.7	3.1	66	80	**1LE1623-2DC0** ■-■■■■	510	1.4
55	**75**	**280 M**	1190	440	✓	94.5	94.6	93.9	0.84	87	3.6	9.2	3.3	66	80	**1LE1623-2DC2** ■-■■■■	560	1.64
75	**100**	**315 S**	1192	600	✓	95	94.9	94.1	0.82	121	3.1	8.4	3.3	64	79	**1LE1623-3AC0** ■-■■■■	750	2.6
90	**125**	**315 M**	1192	720	✓	95	95	94.4	0.84	142	2.7	7.7	3	64	79	**1LE1623-3AC2** ■-■■■■	890	3.1
110	**150**	**315 L**	1192	880	✓	95.8	95.9	95.5	0.83	174	3.2	8.2	3.4	64	79	**1LE1623-3AC4** ■-■■■■	990	3.9
132	**175**	**315 L**	1193	1060	✓	95.8	95.9	95.4	0.81	215	3.7	9.6	3.7	65	80	**1LE1623-3AC5** ■-■■■■	1130	4.48
150	**200**	**315 L**	1194	1200	✓	95.8	95.7	95	0.8	245	4.3	11	4.3	68	83	**1LE1623-3AC6** ■-■■■■	1260	5.41

Voltages (≤ 600 V) [1]		Version					Order code
50 Hz 230 VΔ/400 VY	60 Hz 460 VY	**Standard**	**2**	**2**			–
50 Hz 400 VΔ	60 Hz 460 VΔ	**Standard**	**3**	**4**			–
50 Hz 500 VY		Without additional charge	**2**	**7**			–
50 Hz 500 VΔ		Without additional charge	**4**	**0**			–
For other voltages and more information, see from page 3/104			**9**	**0**			**...**
Types of construction		Version					Order code
Without flange	IM B3 [2]	**Standard**			**A**		–
With flange	IM B5 [2]	With additional charge			**F**		–
With flange	IM B14 [2]	With additional charge			**K**		–
For other types of construction and more information, see from page 3/111					■		**...**
Motor protection		Version					Order code
PTC thermistor with 3 temperature sensors		**Standard**				**B**	–
For other motor protection and more information, see from page 3/121						■	**...**
Terminal box position		Version					
Terminal box at top		**Standard**					**4**
For other terminal box positions and more information, see from page 3/124							■
Special versions							Order code(s)
Forced-air cooled motors w/o ext. fan/fan cover (IC418)		**1LE1623-....** ■-■■■■ -Z					**F90+...+...+...**
For options, see from page 3/132		**1LE1623-....** ■-■■■■ -Z					**...+...+...+...**

– Not required
✓ Available

[1] Operating voltages only ≤ 600 V admissible in accordance with MG1 Table 12-12. Parallel supply lines are required in the case of connection to ≤ 240 V. For frame size 315 with connection to ≤ 240 V, due to the high current, a drilled, removable entry plate (order code **R52**) or a larger terminal box (order code **R50**) can be used. Order codes **R52** and **R50** alter the motor dimensions.

[2] Types derived from IM B3 (IM B6/7/8, IM V6 and IM V5), from IM B5 (IM V3 and IM V1) and from IM B14 (IM V19 and IM V18) are possible, provided that no requirement exists for stamping of the type on the rating plate. The basic type IM B3, IM B5, or IM B14 is stamped as standard on the rating plate. If mounted in a different position, the position must be specified to ensure that the condensation drainage holes are positioned correctly.

© Innomotics 2024

Cast-iron series Innomotics SD 1LE1623 Performance Line – self-ventilated or forced-air cooled

Selection and ordering data

P_{rated}, 60 Hz/ P50 kW	P_{rated}, 60 Hz/ P60 hp	Frame size FS	Operating values at rated power n_{rated}, 60 Hz rpm	T_{rated}, 60 Hz Nm	EISA CC No. CC032A	η_{rated}, 60 Hz, 4/4 %	η_{rated}, 60 Hz, 3/4 %	η_{rated}, 60 Hz, 2/4 %	$\cos\varphi_{rated}$, 60 Hz, 4/4	I_{rated}, 60 Hz, 460 V A	T_{LR}/T_{rated}, 60 Hz	I_{LR}/I_{rated}, 60 Hz	T_B/T_{rated}, 60 Hz	L_{pfA}, 60 Hz dB(A)	L_{WA}, 60 Hz dB(A)	Cast-iron series 1LE1623 – *Performance Line* Article No.	$m_{IM\ B3}$ kg	J kgm²
_ Cooling: Self-ventilated (IC411) or with order code F90 forced-air cooled without external fan and fan cover (IC418)																		
_ Efficiency: NEMA Premium Efficient, UL, CSA, and service factor (SF) 1.15 – for operation in the USA and Canada, NOM-certification is required for exporting to Mexico																		
_ Insulation: Thermal class 155 (temperature class F), IP55 degree of protection, utilization in accordance with thermal class 130 (temperature class B)																		
8-pole: 750 rpm at 50 Hz, 900 rpm at 60 Hz																		
0.75	**1**	**100 L**	870	8.2	–	75.5	74.9	71.7	0.62	1.87	1.9	4.4	2.5	64	72	**1LE1623-1AD4** ■-■■■■	31	0.0096
1.1	**1.5**	**100 L**	865	12.1	–	78.5	78	75.7	0.62	2.7	2.3	4.8	3	65	73	**1LE1623-1AD5** ■-■■■■	36	0.013
1.5	**2**	**112 M**	875	16.4	–	84	83.1	80	0.59	3.75	2.9	5.8	3.6	65	73	**1LE1623-1BD2** ■-■■■■	46	0.028
2.2	**3**	**132 S**	880	24	✓	85.5	85.2	82.9	0.68	4.75	2.3	5.8	3	65	73	**1LE1623-1CD0** ■-■■■■	60	0.046
3	**4**	**132 M**	880	32.5	✓	86.5	85.9	83.5	0.69	6.3	2.2	6	3	67	80	**1LE1623-1CD2** ■-■■■■	78	0.061
3.7	**5**	**160 M**	885	40	✓	86.5	86.7	85.3	0.71	7.5	2	5.8	2.6	69.3	77.3	**1LE1623-1DD2** ■-■■■■	98	0.076
5.5	**7.5**	**160 M**	885	59	✓	86.5	86.7	85.5	0.72	10.8	2.3	6.3	2.8	66	79	**1LE1623-1DD3** ■-■■■■	109	0.1
7.5	**10**	**160 L**	885	81	✓	89.5	89.5	88.1	0.71	14.8	2.6	6.7	2.6	66	79	**1LE1623-1DD4** ■-■■■■	117	0.13
11	**15**	**180 L**	880	119	✓	89.5	89.9	89.3	0.72	21.5	2.3	5.8	2.7	65	78	**1LE1623-1ED4** ■-■■■■	190	0.267
15	**20**	**200 L**	882	162	✓	90.2	90.2	89.2	0.7	30	3.4	7.7	4.2	60	73	**1LE1623-2AD5** ■-■■■■	255	0.42
18.5	**25**	**225 S**	886	199	✓	90.2	90.2	89	0.73	35.5	2.9	6.6	3.4	58	72	**1LE1623-2BD0** ■-■■■■	270	0.5
22	**30**	**225 M**	886	235	✓	91.7	91.8	90.8	0.76	39.5	2.9	6.8	3.3	62	75	**1LE1623-2BD2** ■-■■■■	280	0.55
30	**40**	**250 M**	888	325	✓	91.7	91.9	91.1	0.77	53	2.9	7	3.3	65	79	**1LE1623-2CD2** ■-■■■■	370	0.86
37	**50**	**280 S**	890	395	✓	92.4	92.6	91.9	0.77	65	2.5	6.1	2.6	65	79	**1LE1623-2DD0** ■-■■■■	460	1.1
45	**60**	**280 M**	890	485	✓	92.4	92.5	91.9	0.79	77	2.7	6.8	2.7	66	80	**1LE1623-2DD2** ■-■■■■	550	1.6
55	**75**	**315 S**	891	590	✓	93.6	93.6	92.9	0.79	93	2.6	6.8	3	73	87	**1LE1623-3AD0** ■-■■■■	650	2
75	**100**	**315 M**	890	800	✓	93.6	93.7	93	0.8	126	2.5	6.7	3	73	88	**1LE1623-3AD2** ■-■■■■	720	2.5
90	**125**	**315 L**	890	970	✓	94.1	94.4	94.1	0.81	148	2.4	6.5	2.8	76	90	**1LE1623-3AD4** ■-■■■■	860	3.1
110	**150**	**315 L**	891	1180	✓	94.1	94.2	93.7	0.81	181	2.8	7.2	3.2	76	90	**1LE1623-3AD5** ■-■■■■	980	3.9
132	**175**	**315 L**	892	1410	✓	94.5	94.5	93.9	0.8	220	3.2	7.9	3.7	81	95	**1LE1623-3AD6** ■-■■■■	1070	4.5

Voltages (≤ 600 V) [1]		Version						Order code
50 Hz 230 VΔ/400 VY	60 Hz 460 VY	**Standard**	**2**	**2**				–
50 Hz 400 VΔ	60 Hz 460 VΔ	**Standard**	**3**	**4**				–
50 Hz 500 VY		Without additional charge	**2**	**7**				–
50 Hz 500 VΔ		Without additional charge	**4**	**0**				–
For other voltages and more information, see from page 3/104			**9**	**0**				**...**
Types of construction		Version						Order code
Without flange	IM B3 [2]	**Standard**			**A**			–
With flange	IM B5 [2]	With additional charge			**F**			–
With flange	IM B14 [2]	With additional charge			**K**			–
For other types of construction and more information, see from page 3/111					■			**...**
Motor protection		Version						Order code
PTC thermistor with 3 temperature sensors		**Standard**				**B**		–
For other motor protection and more information, see from page 3/121						■		**...**
Terminal box position		Version						
Terminal box at top		**Standard**					**4**	
For other terminal box positions and more information, see from page 3/124							■	
Special versions								Order code(s)
Forced-air cooled motors w/o ext. fan/fan cover (IC418)			**1LE1623-....** ■-■■■■ -Z					**F90+...+...+...**
For options, see from page 3/132			**1LE1623-....** ■-■■■■ -Z					**...+...+...+...**

– Not required
✓ Available

[1] Operating voltages only ≤ 600 V admissible in accordance with MG1 Table 12-12. Parallel supply lines are required in the case of connection to ≤ 240 V. For frame size 315 with connection to ≤ 240 V, due to the high current, a drilled, removable entry plate (order code **R52**) or a larger terminal box (order code **R50**) can be used. Order codes **R52** and **R50** alter the motor dimensions.

[2] Types derived from IM B3 (IM B6/7/8, IM V6 and IM V5), from IM B5 (IM V3 and IM V1) and from IM B14 (IM V19 and IM V18) are possible, provided that no requirement exists for stamping of the type on the rating plate. The basic type IM B3, IM B5, or IM B14 is stamped as standard on the rating plate. If mounted in a different position, the position must be specified to ensure that the condensation drainage holes are positioned correctly.

© Innomotics 2024

Innomotics GP and Innomotics SD standard motors

Aluminum series Innomotics GP 1LE1021 – self-ventilated or forced-air cooled

Selection and ordering data

P_{rated}, 60 Hz/ P50 kW	P_{rated}, 60 Hz/ P60 hp	Frame size FS	Operating values at rated power η_{rated}, 60 Hz rpm	T_{rated}, 60 Hz Nm	EISA CC No. CC032A	η_{rated}, 60 Hz, 4/4 %	η_{rated}, 60 Hz, 3/4 %	η_{rated}, 60 Hz, 2/4 %	$\cos\varphi_{rated}$, 60 Hz, 4/4	I_{rated}, 60 Hz, 460 V A	T_{LR}/T_{rated}, 60 Hz	I_{LR}/I_{rated}, 60 Hz	T_B/T_{rated}, 60 Hz	L_{pfA}, 60 Hz dB(A)	L_{WA}, 60 Hz dB(A)	Aluminum series 1LE1021 Article No.	$m_{IM\ B3}$	J
_ Cooling: Self-ventilated (IC411) or with order code F90 forced-air cooled without external fan and fan cover (IC418)																		
_ Efficiency: NEMA Energy Efficient, UL, CSA, and service factor (SF) 1.15 – for operation in the USA and Canada, NOM-certification is required for exporting to Mexico																		
_ Insulation: Thermal class 155 (temperature class F), IP55 degree of protection, utilization in accordance with thermal class 130 (temperature class B)																		
4-pole: 1500 rpm at 50 Hz, 1800 rpm at 60 Hz																		
0.55	**0.75**	**80 M**	1750	3	–	75.5	74.6	71.1	0.71	1.29	2.7	6.4	3.8	55	66	**1LE1021-0DB2** ■-■■■■	10	0.0017
6-pole: 1000 rpm at 50 Hz, 1200 rpm at 60 Hz																		
0.37	**0.5**	**80 M**	1140	3,1	–	64	63	59.1	0.63	1.15	2.3	4.6	2.9	45	56	**1LE1021-0DC2** ■-■■■■	9	0.0017
0.55	**0.75**	**80 M**	1145	4,6	–	68	67.4	63.7	0.61	1.66	2.9	5.2	3.6	45	56	**1LE1021-0DC3** ■-■■■■	12	0.0025
8-pole: 750 rpm at 50 Hz. 900 rpm at 60 Hz																		
0.18	**0.25**	**80 M**	855	2	–	46	43.5	37	0.53	0.93	2	2.5	2.6	55	66	**1LE1021-0DD2** ■-■■■■	9	0.0017
0.25	**0.33**	**80 M**	860	2,8	–	52	49	43	0.51	1.21	2.2	2.9	3	55	66	**1LE1021-0DD3** ■-■■■■	13	0.0024
0.37	**0.5**	**90 S**	845	4,2	–	58	55.8	49.5	0.64	1.25	1.6	3	2.1	57	69	**1LE1021-0ED0** ■-■■■■	11	0.0019
0.55	**0.75**	**90 L**	840	6,3	–	62	61.2	56.5	0.66	1.69	1.8	3.1	2.1	57	69	**1LE1021-0ED4** ■-■■■■	13	0.0026

3

Voltages (≤ 600 V) [1]		Version						Order code
50 Hz 230 VΔ/400 VY	60 Hz 460 VY	**Standard**	**2**	**2**				–
50 Hz 400 VΔ	60 Hz 460 VΔ	**Standard**	**3**	**4**				–
50 Hz 500 VY		Without additional charge	**2**	**7**				–
50 Hz 500 VΔ		Without additional charge	**4**	**0**				–
For other voltages and more information, see from page 3/103			**9**	**0**				**...**
Types of construction [2]		Version						Order code
With flange	IM B5 [3]	With additional charge			**F**			–
With flange	IM B14 [3]	With additional charge			**K**			–
For other types of construction and more information, see from page 3/107					■			**...**
Motor protection		Version						Order code
Without		**Standard**				**A**		–
PTC thermistor with 1 temperature sensor		With additional charge				**B**		–
For other motor protection and more information, see from page 3/120						■		**...**
Terminal box position		Version						
Terminal box at top		**Standard**					**4**	
For other terminal box positions and more information, see from page 3/123							■	

Special versions		Order code(s)
Forced-air cooled motors w/o ext. fan/fan cover (IC418)	**1LE1021-....** ■-■■■■ **-Z**	**F90 +...+...+...**
For options, see from page 3/126	**1LE1021-....** ■-■■■■ **-Z**	**...+...+...+...**

– Not required
✓ Available

[1] Operating voltages only ≤ 600 V admissible in accordance with MG1 Table 12-11.
[2] Types of construction with feet are not possible for 2-pole, 4-pole and 6-pole motors ≤ 200 hp in accordance with MG1 Table 12-11.
[3] Types derived from IM B5 (IM V3 and IM V1) and from IM B14 (IM V19 and IM V18) are possible, provided that no requirements exist for condensation drainage holes (**H03**) and stamping of the type on the rating plate. The basic type IM B5 or IM B14 is stamped as standard on the rating plate.
For orders with condensation drainage holes (**H03**), the type must be specified.

© Innomotics 2024

Cast-iron series Innomotics SD 1LE1521 Basic Line – self-ventilated or forced-air cooled

Selection and ordering data

P_{rated}, 60 Hz/ P50 kW	P_{rated}, 60 Hz/ P60 hp	Frame size FS	Operating values at rated power n_{rated}, 60 Hz rpm	T_{rated}, 60 Hz Nm	EISA CC No. CC032A	η_{rated}, 60 Hz, 4/4 %	η_{rated}, 60 Hz, 3/4 %	η_{rated}, 60 Hz, 2/4 %	$\cos\varphi_{rated}$, 60 Hz, 4/4	I_{rated}, 60 Hz, 460 V A	T_{LR}/T_{rated}, 60 Hz	I_{LR}/I_{rated}, 60 Hz	T_B/T_{rated}, 60 Hz	L_{pfA}, 60 Hz dB(A)	L_{WA}, 60 Hz dB(A)	Cast-iron series 1LE1521 – *Basic Line* Article No.	$m_{IM\ B3}$ kg	J kgm²
_ Cooling: Self-ventilated (IC411) or with order code F90 forced-air cooled without external fan and fan cover (IC418)																		
_ Efficiency: NEMA Energy Efficient, UL, CSA, and service factor (SF) 1.15 – for operation in the USA and Canada, NOM-certification is required for exporting to Mexico																		
_ Insulation: Thermal class 155 (temperature class F), IP55 degree of protection, utilization in accordance with thermal class 130 (temperature class B)																		
2-pole: 3000 rpm at 50 Hz, 3600 rpm at 60 Hz																		
0.37	**0.5**	**71 M**	3410	1.04	–	72	71.4	67.8	0.77	0.84	2.9	5.1	3	63	74	**1LE1521-0CA2** ■-■■■■	12	0.00035
0.55	**0.75**	**71 M**	3420	1.54	–	74	73.4	69.6	0.76	1.23	3.4	5.4	3.4	63	74	**1LE1521-0CA3** ■-■■■■	13	0.00045
4-pole: 1500 rpm at 50 Hz, 1800 rpm at 60 Hz																		
0.25	**0.33**	**71 M**	1715	1.39	–	70	68.5	63.6	0.64	0.7	2.8	4.4	3.1	53	64	**1LE1521-0CB2** ■-■■■■	12	0.00076
0.37	**0.5**	**71 M**	1705	2.05	–	72	71.2	66.9	0.67	0.96	3	5	3.2	59	67	**1LE1521-0CB3** ■-■■■■	13	0.00095
0.55	**0.75**	**80 M**	1750	3	–	75.5	74.6	71.1	0.71	1.29	2.7	6.4	3.8	55	66	**1LE1521-0DB2** ■-■■■■	17	0.0017
6-pole: 1000 rpm at 50 Hz, 1200 rpm at 60 Hz																		
0.18	**0.25**	**71 M**	1105	1.56	–	55	53.6	48.8	0.61	0.67	2.9	2.7	2.9	49	60	**1LE1521-0CC2** ■-■■■■	12	0.00080
0.25	**0.33**	**71 M**	1100	2.15	–	59.5	58.9	54.7	0.64	0.82	2.7	3	2.7	49	60	**1LE1521-0CC3** ■-■■■■	13	0.00098
0.37	**0.5**	**80 M**	1140	3.1	–	64	63	59.1	0.63	1.15	2.3	4.6	2.9	45	56	**1LE1521-0DC2** ■-■■■■	17	0.0017
0.55	**0.75**	**80 M**	1145	4.6	–	68	67.4	63.7	0.61	1.66	2.9	5.2	3.6	45	56	**1LE1521-0DC3** ■-■■■■	19	0.0025
8-pole: 750 rpm at 50 Hz, 900 rpm at 60 Hz																		
0.09	**0.12**	**71 M**	815	1.05	-	40	38	33	0.59	0.5	2.1	1.8	2.1	59	63	**1LE1521-0CD2** ■-■■■■	12	0.00077
0.12	**0.16**	**71 M**	815	1.41	-	40	38	33	0.57	0.66	2.3	2.1	2.4	52	63	**1LE1521-0CD3** ■-■■■■	13	0.00100
0.18	**0.25**	**80 M**	855	2	-	46	43.5	37	0.53	0.93	2	2.5	2.6	55	66	**1LE1521-0DD2** ■-■■■■	17	0.0017
0.25	**0.33**	**80 M**	860	2.8	-	52	49	43	0.51	1.21	2.2	2.9	3	55	66	**1LE1521-0DD3** ■-■■■■	19	0.00246
0.37	**0.5**	**90 S**	845	4.2	-	58	55.8	49.5	0.64	1.25	1.6	3	2.1	57	69	**1LE1521-0ED0** ■-■■■■	23	0.00225
0.55	**0.75**	**90 L**	840	6.3	-	62	61.2	56.5	0.66	1.69	1.8	3.1	2.1	57	69	**1LE1521-0ED4** ■-■■■■	26	0.00305

Voltages (≤ 600 V) [1]		Version					Order code
50 Hz 230 VΔ/400 VY	60 Hz 460 VY	**Standard**	**2**	**2**			–
50 Hz 400 VΔ	60 Hz 460 VΔ	**Standard**	**3**	**4**			–
50 Hz 500 VY		Without additional charge	**2**	**7**			–
50 Hz 500 VΔ		Without additional charge	**4**	**0**			–
For other voltages and more information, see from page 3/104			**9**	**0**			**...**
Types of construction [2]		Version					Order code
Without flange	IM B3 [3]	**Standard**			**A**		–
With flange	IM B5 [3]	With additional charge			**F**		–
For other types of construction and more information, see from page 3/111					■		**...**
Motor protection		Version					Order code
Without		**Standard**				**A**	–
PTC thermistor with 1 temperature sensor		With additional charge				**B**	–
For other motor protection and more information, see from page 3/121						■	**...**
Terminal box position		Version					
Terminal box at top		**Standard**					**4**
For other terminal box positions and more information, see from page 3/124							■

Special versions		Order code(s)
Forced-air cooled motors w/o ext. fan/fan cover (IC418)	**1LE1521-....** ■-■■■■ **-Z**	**F90+...+...+...**
For options, see from page 3/132	**1LE1521-....** ■-■■■■ **-Z**	**...+...+...+...**

– Not required
✓ Available

[1] Operating voltages only ≤ 600 V admissible in accordance with MG1 Table 12-11. Parallel supply lines are required in the case of connection to ≤ 240 V. For frame size 315 with connection to ≤ 240 V, due to the high current, a drilled, removable entry plate (order code **R52**) or a larger terminal box (order code **R50**) can be used. Order codes **R52** and **R50** alter the motor dimensions.

[2] Types of construction with feet are not possible for 2-pole, 4-pole and 6-pole motors ≤ 200 hp in accordance with MG1 Table 12-11.

[3] Types derived from IM B5 (IM V3 and IM V1) and from IM B14 (IM V19 and IM V18) are possible, provided that no requirement exists for stamping of the type on the rating plate. The basic type IM B5 or IM B14 is stamped as standard on the rating plate. If mounted in a different position, the position must be specified to ensure that the condensation drainage holes are positioned correctly.

© Innomotics 2024

Innomotics GP and Innomotics SD standard motors

Aluminum series Innomotics GP 1LE1011 for constant load torque – self-ventilated

Selection and ordering data

			Operating values at rated power for N1								Operating values at rated power for N2								Aluminum series 1LE1011 – *one winding* Article No.		
P_{rated1}, 50 Hz	P_{rated2}, 50 Hz	Frame size	n_{rated1}, 50 Hz	T_{rated1}, 50 Hz	η_{rated1}, 50 Hz, 4/4	$\cos\varphi_{rated1}$, 50 Hz, 4/4	I_{rated1}, 50 Hz, 400 V	T_{LR}/T_{rated1}, 50 Hz	I_{LR}/I_{rated1}, 50 Hz	T_B/T_{rated1}, 50 Hz	n_{rated2}, 50 Hz	T_{rated2}, 50 Hz	η_{rated2}, 50 Hz, 4/4	$\cos\varphi_{rated2}$, 50 Hz, 4/4	I_{rated2}, 50 Hz, 400 V	T_{LR}/T_{rated2}, 50 Hz	I_{LR}/I_{rated2}, 50 Hz	T_B/T_{rated2}, 50 Hz		$m_{IM B3}$	J
kW	kW	FS	rpm	Nm	%		A				rpm	Nm	%		A					kg	kgm²
_ Cooling: Self-ventilated (IC411)																					
_ Line operation: Double pole-changing for constant load torque																					
_ Insulation: Thermal class 155 (temperature class F), IP55 degree of protection, utilization in accordance with thermal class 130 (temperature class B)																					
4/2-pole: 1500/3000 rpm at 50 Hz with one winding connected in Dahlander circuit																					
1500 rpm	*3000 rpm*		*1500 rpm*								*3000 rpm*										
1.9	**2.4**	**100 L**	1390	13.1	72	0.87	4.40	1.7	4.1	1.8	2800	8.2	70	0.88	5.6	1.8	4.2	1.8	**1LE1011-1AJ4** ■-■■■■	18	0.0059
2.5	**3.1**	**100 L**	1440	16.6	76.3	0.87	5.4	1.9	5.2	2.8	2840	10.4	77.3	0.9	6.4	2.1	5.2	2.9	**1LE1011-1AJ5** ■-■■■■	22	0.0078
3.7	**4.4**	**112 M**	1420	24.9	79.9	0.86	7.8	1.8	4.9	2.3	2885	14.6	80.8	0.92	8.5	2.1	6.4	2.6	**1LE1011-1BJ2** ■-■■■■	27	0.01
4.7	**5.9**	**132 S**	1440	31.2	82	0.84	9.8	1.6	5.6	2.7	2875	19.6	80	0.89	12.0	1.8	5.6	2.8	**1LE1011-1CJ0** ■-■■■■	38	0.019
6.5	**8.0**	**132 M**	1435	43.3	82	0.86	13.3	1.7	5.4	2.6	2880	26.5	82	0.92	15.3	1.8	6.3	2.8	**1LE1011-1CJ2** ■-■■■■	44	0.024
9.3	**11.5**	**160 M**	1440	61.7	84.5	0.87	18.3	1.7	5.7	2.8	2870	38.3	82	0.92	22.0	1.8	6	2.9	**1LE1011-1DJ2** ■-■■■■	62	0.044
13.0	**16**	**160 L**	1450	85.6	87	0.85	25.5	1.6	6	2.3	2920	52.3	86	0.94	35.5	1.9	7.1	2.8	**1LE1011-1DJ6** ■-■■■■	85	0.068
8/4-pole: 750/1500 rpm at 50 Hz with one winding connected in Dahlander circuit																					
750 rpm	*1500 rpm*		*750 rpm*								*1500 rpm*										
0.55	**1.1**	**100 L**	715	7.3	57	0.53	2.65	2	3	2.7	1425	7.4	77.7	0.87	2.35	1.7	4.6	2.1	**1LE1011-1AL4** ■-■■■■	18	0.0059
0.9	**1.5**	**100 L**	700	12.3	64.2	0.64	3.15	1.5	2.9	2	1415	10.1	77.7	0.89	3.15	1.5	4.5	1.9	**1LE1011-1AL5** ■-■■■■	22	0.0078
1.1	**1.9**	**112 M**	715	14.7	66.5	0.6	4.00	1.6	3.2	2.3	1440	12.6	80.9	0.87	3.90	1.6	5.4	2.3	**1LE1011-1BL2** ■-■■■■	27	0.01
1.6	**3.2**	**132 S**	730	20.9	61.5	0.53	7.1	1.6	3.3	2.6	1450	21.1	82.3	0.87	6.5	1.4	5	2.1	**1LE1011-1CL0** ■-■■■■	38	0.019
2.2	**4.4**	**132 M**	730	28.8	68	0.52	9.0	2	3.8	3	1450	29	84.5	0.88	8.5	1.5	5.5	2.3	**1LE1011-1CL2** ■-■■■■	44	0.024
3.5	**7**	**160 M**	730	45.8	77.5	0.57	11.4	2	4.2	2.8	1450	46.1	84	0.9	13.4	1.6	5.2	2.2	**1LE1011-1DL2** ■-■■■■	62	0.044
5.6	**11**	**160 L**	725	73.8	80.2	0.6	16.8	1.9	4	2.7	1445	72.7	84.4	0.9	21.0	1.5	5.1	2.2	**1LE1011-1DL4** ■-■■■■	73	0.056

Voltages		Version				Order code
50 Hz 230 V		**Standard**	**2**	**2**		–
50 Hz 400 V		**Standard**	**3**	**4**		–
50 Hz 500 V		Without additional charge	**4**	**0**		–
50 Hz 690 V		Without additional charge	**4**	**7**		–
For other voltages [1] and more information, see from page 3/103			**9**	**0**		**...**
Types of construction		Version				Order code
Without flange	IM B3 [2]	**Standard**			**A**	–
With flange	IM B5 [2]	With additional charge			**F**	–
With flange	IM B14 [2]	With additional charge			**K**	–
For other types of construction and more information, see from page 3/107					■	**...**
Motor protection		Version				Order code
Without		**Standard**			**A**	–
PTC thermistor with 3 temperature sensors		With additional charge			**B**	–
For other motor protection and more information, see from page 3/120					■	**...**
Terminal box position		Version				
Terminal box at top		**Standard**			**4**	
For other terminal box positions and more information, see from page 3/123					■	
Special versions						Order code(s)
For options, see from page 3/126						**1LE1011- .... ■-■■■■ -Z** ...+...+...+...

Note:
Pole-changing motors (4/2-pole) do not comply with the vibration values stipulated in IEC 60034-14 when rigidly installed (see also page 1/64).

[1] Operating values for 60 Hz are available on request.

[2] Types derived from IM B3 (IM B6/7/8, IM V6, and IM V5), from IM B5 (IM V3 and IM V1) and from IM B14 (IM V19 and IM V18) are possible, provided that no requirements exist for condensation drainage holes (**H03**) or stamping of the type on the rating plate. The basic type IM B3, IM B5, or IM B14 is stamped as standard on the rating plate. For orders with condensation drainage holes (**H03**), the type must be specified.

© Innomotics 2024

Selection and ordering data

			Operating values at rated power for N1								Operating values at rated power for N2								Aluminum series 1LE1011 – *one winding* 1LE1012 – *two windings* Article No.			
P_{rated1}, 50 Hz	P_{rated2}, 50 Hz	Frame size	n_{rated1}, 50 Hz	T_{rated1}, 50 Hz	η_{rated1}, 50 Hz, 4/4	$\cos\varphi_{rated1}$, 50 Hz, 4/4	I_{rated1}, 50 Hz, 400 V	T_{LR}/T_{rated1}, 50 Hz	I_{LR}/I_{rated1}, 50 Hz	T_B/T_{rated1}, 50 Hz	n_{rated2}, 50 Hz	T_{rated2}, 50 Hz	η_{rated2}, 50 Hz, 4/4	$\cos\varphi_{rated2}$, 50 Hz, 4/4	I_{rated2}, 50 Hz, 400 V	T_{LR}/T_{rated2}, 50 Hz	I_{LR}/I_{rated2}, 50 Hz	T_B/T_{rated2}, 50 Hz			$m_{IM\,B3}$	J
kW	kW	FS	rpm	Nm	%		A				rpm	Nm	%		A							
_ Cooling: Self-ventilated (IC411)																						
_ Line operation: Double pole-changing for square-law load torque, e.g. for driving fans																						
_ Insulation: Thermal class 155 (temperature class F), IP55 degree of protection, utilization in accordance with thermal class 130 (temperature class B)																						
4/2-pole: 1500/3000 rpm at 50 Hz with one winding connected in Dahlander circuit																						
1500 rpm	*3000 rpm*		*1500 rpm*								*3000 rpm*											
0.65	**2.4**	**100 L**	1415	4.4	75	0.86	1.45	1.6	4.1	1.8	2800	8.2	70	0.88	5.6	1.8	4.2	1.8	**1LE1011-1AP4** ■-■■■■		18	0.0059
0.8	**3.1**	**100 L**	1435	5.3	79	0.85	1.72	1.9	5.2	2.8	2840	10.4	77.3	0.9	6.4	2.1	5.2	2.8	**1LE1011-1AP5** ■-■■■■		22	0.0078
1.1	**4.4**	**112 M**	1455	7.2	83.4	0.85	2.25	2.2	6.1	2.5	2885	14.6	80.8	0.92	8.5	2.1	6.4	2.5	**1LE1011-1BP2** ■-■■■■		27	0.01
1.45	**5.9**	**132 S**	1460	9.5	84	0.84	2.95	1.6	5.8	2.8	2875	19.6	80	0.89	12.0	1.8	5.6	2.8	**1LE1011-1CP0** ■-■■■■		38	0.019
2.0	**8.0**	**132 M**	1455	13.1	85	0.85	4.00	1.8	5.6	2.8	2880	26.5	82	0.92	15.3	1.8	6.3	2.8	**1LE1011-1CP2** ■-■■■■		44	0.024
2.9	**11.5**	**160 M**	1465	18.9	86.5	0.86	5.6	1.8	5.9	2.9	2870	38.3	82	0.92	22.0	1.8	6	2.9	**1LE1011-1DP2** ■-■■■■		62	0.044
4.3	**16**	**160 L**	1455	28.2	87	0.85	8.4	1.6	6	2.3	2920	52.3	86	0.94	28.5	1.9	7.1	2.3	**1LE1011-1DP6** ■-■■■■		85	0.068
6/4-pole: 1000/1500 rpm at 50 Hz with two windings																						
1000 rpm	*1500 rpm*		*1000 rpm*								*1500 rpm*											
0.6	**1.7**	**100 L**	970	5.9	55.5	0.62	2.50	1.7	3.4	2.7	1435	11.3	76.2	0.83	3.90	1.8	4.6	2.7	**1LE1012-1AQ4** ■-■■■■		18	0.0059
0.75	**2.1**	**100 L**	955	8	64.2	0.77	2.20	1.2	3.4	2	1435	14	78.4	0.84	4.60	2	5.4	2	**1LE1012-1AQ5** ■-■■■■		22	0.0078
0.9	**3.0**	**112 M**	975	8.8	64.7	0.66	3.05	1.6	3.9	2.5	1455	19.7	81.4	0.78	6.8	2.1	6.4	2.5	**1LE1012-1BQ2** ■-■■■■		27	0.01
1.2	**3.9**	**132 S**	980	11.7	72.3	0.7	3.40	1.4	4.6	2.5	1455	25.6	83.1	0.83	8.2	1.5	5.7	2.5	**1LE1012-1CQ0** ■-■■■■		38	0.019
1.7	**5.4**	**132 M**	980	16.6	74.1	0.71	4.65	1.7	5	2.5	1465	35.2	85.9	0.82	11.1	2	6.9	2.5	**1LE1012-1CQ2** ■-■■■■		44	0.024
2.5	**7.2**	**160 M**	985	24.2	77.7	0.71	6.5	1.5	4.7	2.6	1470	46.8	86.9	0.85	14.1	1.8	6.3	2.6	**1LE1012-1DQ2** ■-■■■■		62	0.044
3.7	**12.0**	**160 L**	985	35.9	82.4	0.69	9.4	2.3	6.2	3.5	1475	77.7	87.9	0.8	24.5	2.1	7.5	3.5	**1LE1012-1DQ4** ■-■■■■		73	0.059
6.5	**19**	**180 L**	985	63	81.0	0.7	16.5	1.8	5.5	2.7	1475	123	0.9	0.8	38.0	2.5	8.1	3.7	**1LE1012-1EQ4** ■-■■■■		132	0.13
9.5	**26**	**200 L**	985	92	84.5	0.7	23.0	2.3	6.5	2.8	1475	168	0.91	0.8	52	2.3	7.5	3.4	**1LE1012-2AQ5** ■-■■■■		173	0.20

Voltages	Version					Order code
50 Hz 230 V	**Standard**	**2**	**2**			–
50 Hz 400 V	**Standard**	**3**	**4**			–
50 Hz 500 V	Without additional charge	**4**	**0**			–
50 Hz 690 V	Without additional charge	**4**	**7**			–
For other voltages [1] and more information, see from page 3/103		**9**	**0**			**...**
Types of construction	Version					Order code
Without flange IM B3 [2]	**Standard**		**A**			–
With flange IM B5 [2]	With additional charge		**F**			–
With flange IM B14 [2]	With additional charge		**K**			–
For other types of construction and more information, see from page 3/107			■			**...**
Motor protection	Version					Order code
Without	**Standard**			**A**		–
PTC thermistor with 3 temperature sensors	With additional charge			**B**		–
For other motor protection and more information, see from page 3/120				■		**...**
Terminal box position	Version					
Terminal box at top	**Standard**				**4**	
For other terminal box positions and more information, see from page 3/123					■	
Special versions						Order code(s)
For options, see from page 3/126		**1LE101■-....■-■■■■-Z**				**...+...+...**

Note:
Pole-changing motors (4/2-pole) do not comply with the vibration values stipulated in IEC 60034-14 when rigidly installed (see also page 1/64).

[1] Operating values for 60 Hz are available on request.

[2] Types derived from IM B3 (IM B6/7/8, IM V6, and IM V5), from IM B5 (IM V3 and IM V1) and from IM B14 (IM V19 and IM V18) are possible, provided that no requirements exist for condensation drainage holes (**H03**) or stamping of the type on the rating plate. The basic type IM B3, IM B5, or IM B14 is stamped as standard on the rating plate. For orders with condensation drainage holes (**H03**), the type must be specified.

© Innomotics 2024

Innomotics GP and Innomotics SD standard motors

Aluminum series Innomotics GP 1LE1011/1LE1012 for square-law load torque – self-ventilated

Selection and ordering data

			Operating values at rated power for N1								Operating values at rated power for N2										
$P_{rated1,50\,Hz}$	$P_{rated2,50\,Hz}$	Frame size	$n_{rated1,50\,Hz}$	$T_{rated1,50\,Hz}$	$\eta_{rated1,50\,Hz,4/4}$	$\cos\varphi_{rated1,50\,Hz,4/4}$	$I_{rated1,50\,Hz,400\,V}$	$T_{LR}/T_{rated1,50\,Hz}$	$I_{LR}/I_{rated1,50\,Hz}$	$T_B/T_{rated1,50\,Hz}$	$n_{rated2,50\,Hz}$	$T_{rated2,50\,Hz}$	$\eta_{rated2,50\,Hz,4/4}$	$\cos\varphi_{rated2,50\,Hz,4/4}$	$I_{rated2,50\,Hz,400\,V}$	$T_{LR}/T_{rated2,50\,Hz}$	$I_{LR}/I_{rated2,50\,Hz}$	$T_B/T_{rated2,50\,Hz}$	**Aluminum series 1LE1011 –** *one winding* Article No.	$m_{IM\,B3}$	J
kW	kW	FS	rpm	Nm	%		A				rpm	Nm	%		A						
_ Cooling: Self-ventilated (IC411)																					
_ Line operation: Double pole-changing for square-law load torque, e.g. for driving fans																					
_ Insulation: Thermal class 155 (temperature class F), IP55 degree of protection, utilization in accordance with thermal class 130 (temperature class B)																					
8/4-pole: 750/1500 rpm at 50 Hz with one winding connected in Dahlander circuit																					
750 rpm	*1500 rpm*		*750 rpm*								*1500 rpm*										
0.5	**2.0**	**100 L**	720	6.6	52	0.5	2.80	1.3	3.3	3.4	1440	13.3	82	0.79	4.45	3	7.5	3.4	**1LE1011-1AR4** ■-■■■■	22	0.0078
0.65	**2.5**	**100 L**	715	8.7	56	0.58	2.90	1	3.2	2.6	1425	16.8	81	0.84	5.3	2.3	6.3	2.6	**1LE1011-1AR5** ■-■■■■	22	0.0078
0.9	**3.6**	**112 M**	715	12	56	0.57	4.05	1	2.8	2.1	1430	24	82	0.84	7.5	1.9	5.6	2.1	**1LE1011-1BR2** ■-■■■■	27	0.01
1.1	**4.7**	**132 S**	730	14.4	62	0.54	4.75	1	3.2	2.2	1430	31.4	82	0.86	9.6	1.7	5.2	2.2	**1LE1011-1CR0** ■-■■■■	38	0.019
1.4	**6.4**	**132 M**	730	18.3	67.5	0.52	5.8	1.1	3.5	2.3	1440	42.4	84.5	0.87	12.6	1.9	5.7	2.3	**1LE1011-1CR2** ■-■■■■	44	0.024
2.2	**9.5**	**160 M**	730	28.8	80.6	0.63	6.3	1.5	4	2.5	1465	61.9	86.1	0.84	19.0	2	6.3	2.5	**1LE1011-1DR2** ■-■■■■	62	0.044
3.3	**14**	**160 L**	735	42.9	81.4	0.56	10.4	2.5	4.8	3.3	1475	90.6	85.8	0.73	32.5	2.5	7.2	3.3	**1LE1011-1DR4** ■-■■■■	73	0.056
4.5	**16**	**180 M**	730	59	79.3	0.59	13.9	1.4	3.8	2.3	1470	104	84.6	0.83	33.0	1.4	7	2.9	**1LE1011-1ER2** ■-■■■■	128	0.12
5	**18.5**	**180 L**	730	65	78.3	0.6	15.4	1.5	3.8	2.1	1470	120	86.6	0.83	37.0	2.3	7	2.7	**1LE1011-1ER4** ■-■■■■	132	0.13
7.5	**28**	**200 L**	735	97	85.0	0.6	21.0	1.7	4	2.1	1475	181	90.5	0.85	53	2.7	7.4	3.1	**1LE1011-2AR5** ■-■■■■	173	0.20

Voltages		Version					Order code
50 Hz 230 V		**Standard**	**2**	**2**			–
50 Hz 400 V		**Standard**	**3**	**4**			–
50 Hz 500 V		Without additional charge	**4**	**0**			–
50 Hz 690 V		Without additional charge	**4**	**7**			–
For other voltages [1] and more information, see from page 3/103			**9**	**0**			**...**
Types of construction		Version					Order code
Without flange	IM B3 [2]	**Standard**		**A**			–
With flange	IM B5 [2]	With additional charge		**F**			–
With flange	IM B14 [2]	With additional charge		**K**			–
For other types of construction and more information, see from page 3/107				■			**...**
Motor protection		Version					Order code
Without		**Standard**			**A**		–
PTC thermistor with 3 temperature sensors		With additional charge			**B**		–
For other motor protection and more information, see from page 3/120					■		**...**
Terminal box position		Version					
Terminal box at top		**Standard**				**4**	
For other terminal box positions and more information, see from page 3/123						■	
Special versions							Order code(s)
For options, see from page 3/126			**1LE101■-....**	■-■■■■		**-Z**	**...+...+...**

Note:
Pole-changing motors (4/2-pole) do not comply with the vibration values stipulated in IEC 60034-14 when rigidly installed (see also page 1/64).

[1] Operating values for 60 Hz are available on request.

[2] Types derived from IM B3 (IM B6/7/8, IM V6, and IM V5), from IM B5 (IM V3 and IM V1) and from IM B14 (IM V19 and IM V18) are possible, provided that no requirements exist for condensation drainage holes (**H03**) or stamping of the type on the rating plate. The basic type IM B3, IM B5, or IM B14 is stamped as standard on the rating plate. For orders with condensation drainage holes (**H03**), the type must be specified.

© Innomotics 2024

Selection and ordering data

Voltages	Article No. supplement: Voltage code 12th and 13th position of the Article No.		Additional identification code with order code and plain text if required	Frame size 63	71	80	90	100	112	132	160	180	200	Motor version		
								1LE1004						IEC	IE4	①
				1LE1003											IE3	②
								1LE1083								③
				1LE1001											IE2	④
				1LE1002											IE1	⑤
				1LE1043										APAC Line	IE3	⑥
						1LE1041									IE2	⑦
				1LE1023										Eagle Line	NPE (NEMA)	⑧
1LE10 . . - . . . . ■	- ■	. . .	Order code				1LE1021								NEE (NEMA)	⑨
Voltage at 50 Hz or 60 Hz – Operating values at rated power for 60 Hz are stored in the Siemens Product Configurator																
50 Hz 230 VΔ/400 VY, 60 Hz 460 VY	2	2	–	□	□	□	□	□	□	□	□	□	□			
50 Hz 400 VΔ/690 VY, 60 Hz 460 VΔ [1]	3	4	–	□	□	□	□	□	□	□	□	□	□	Not for:	APAC Line Eagle Line	⑥, ⑦ ⑧, ⑨
50 Hz 400 VΔ, 60 Hz 460 VΔ [1]				–	–	□	□	□	□	□	□	□	□	Only for:	APAC Line Eagle Line	⑥, ⑦ ⑧, ⑨
50 Hz 400 VY, 60 Hz 460 VY [2] [3]	0	2	–	–	–	□	□	□	□	□	□	□	□	Not for:	IEC IE3	③
50 Hz 400 VΔ, 60 Hz 460 VΔ [4]	0	4	–	–	–	□	□	□	□	□	□	□	□	Not for:	IEC IE3	③
50 Hz 500 VY 60 Hz 575 VY [7]	2	7	–	○	○	○	○	○	○	○	○	○	○	Not for:	IEC IE4 ① frame size100 ... 160	
50 Hz 500 VΔ 60 Hz 575 VΔ	4	0	–	○	○	–	–	○	○	○	○	○	○	Not for:	IEC IE4 ① frame size100 ... 160	
50 Hz 690 VY	0	6	–	–	–	–	○	○	○	○	○	○	○	Only for:	IEC IE3	③
50 Hz 690 VΔ	4	7	–	–	–	–	○	○	○	○	○	○	○	Only for:	IEC IE3	③
50 Hz 220 VΔ/380 VY 60 Hz 440 VY	2	1	–	✓	✓	✓	✓	✓	✓	✓	✓	✓	✓	Not for:	IEC IE3	③
50 Hz 380 VΔ/660 VY [1], 60 Hz 440 VΔ	3	3	–	✓	✓	✓	✓	✓	✓	✓	✓	✓	✓	Not for:	APAC Line Eagle Line IEC IE3	⑥, ⑦ ⑧, ⑨ ③
50 Hz 380 VΔ [1] 60 Hz 440 VΔ				–	–	✓	✓	✓	✓	✓	✓	✓	✓	Only for:	APAC Line Eagle Line IEC IE3	⑥, ⑦ ⑧, ⑨ ③
50 Hz 240 VΔ/415 VY, 60 Hz 480 VY	2	3	–	✓	✓	✓	✓	✓	✓	✓	✓	✓	✓	Not for:	IEC IE3	③
50 Hz 415 VΔ, 60 Hz 480 VΔ	3	5	–	✓	✓	✓	✓	✓	✓	✓	✓	✓	✓	Not for:	IEC IE3	③
60 Hz 220 VΔ/380 VY	1	7	–	–	–	✓	✓	✓	✓	✓	✓	✓	✓	Only for:	IEC IE1 IEC IE3	
60 Hz 230 VΔ/400 VY	1	8	–	–	–	✓	✓	✓	✓	✓	✓	✓	✓	Only for:	IEC IE1 IEC IE3	
60 Hz 380 VΔ/660 VY [1]	3	0	–	–	–	✓	✓	✓	✓	✓	✓	✓	✓	Only for:	IEC IE1 IEC IE3	
60 Hz 380 VΔ [1]			–	–	–	✓	✓	✓	✓	✓	✓	✓	✓	Only for:	IEC IE1 IEC IE3	
60 Hz 400 VΔ/690 VY [1]	3	1	–	–	–	✓	✓	✓	✓	✓	✓	✓	✓	Only for:	IEC IE1 IEC IE3	
60 Hz 400 VΔ [1]			–	–	–	✓	✓	✓	✓	✓	✓	✓	✓	Only for:	IEC IE1 IEC IE3	
Voltage at 60 Hz and required power at 60 Hz																
220 VΔ/380 VY; 50 Hz power	9	0	M2A	✓	✓	✓	✓	✓	✓	✓	✓	✓	✓	Not for:	IEC IE3	③
220 VΔ/380 VY; 60 Hz power	9	0	M1A	✓	✓	✓	✓	✓	✓	✓	✓	✓	✓	Not for:	APAC Line Eagle Line IEC IE3	⑥, ⑦ ⑧, ⑨ ③
380 VΔ/660 VY; 50 Hz power [1]	9	0	M2B	✓	✓	✓	✓	✓	✓	✓	✓	✓	✓	Not for:	Eagle Line IEC IE3	⑧, ⑨ ③
380 VΔ; 50 Hz power [1]				–	–	–	–	✓	✓	✓	✓	✓	✓	Only for:	APAC Line Eagle Line	⑥, ⑦ ⑧, ⑨
380 VΔ/660 VY; 60 Hz power [1] [5]	9	0	M1B	✓	✓	✓	✓	✓	✓	✓	✓	✓	✓	Not for:	APAC Line Eagle Line IEC IE3	⑥, ⑦ ⑧, ⑨ ③
440 VY; 50 Hz power	9	0	M2C	✓	✓	✓	✓	✓	✓	✓	✓	✓	✓	Not for:	IEC IE3	③
440 VY; 60 Hz power	9	0	M1C	✓	✓	✓	✓	✓	✓	✓	✓	✓	✓	Not for:	APAC Line Eagle Line IEC IE3	⑥, ⑦ ⑧, ⑨ ③
440 VΔ; 50 Hz power	9	0	M2D	✓	✓	✓	✓	✓	✓	✓	✓	✓	✓	Not for:	IEC IE3	③
440 VΔ; 60 Hz power	9	0	M1D	✓	✓	✓	✓	✓	✓	✓	✓	✓	✓	Not for:	APAC Line Eagle Line IEC IE3	⑥, ⑦ ⑧, ⑨ ③

For legends and footnotes, see page 3/102.

© Innomotics 2024

Innomotics GP and Innomotics SD standard motors

Aluminum series Innomotics GP 1LE10

Voltages	Article No. supplement: Voltage code 12th and 13th position of the Article No.		Additional identification code with order code and plain text if required	Frame size 63	71	80	90	100	112	132	160	180	200	Motor version		
								1LE1004						IEC	IE4	①
				1LE1003											IE3	②
								1LE1083								③
				1LE1001											IE2	④
				1LE1002											IE1	⑤
				1LE1043										APAC Line	IE3	⑥
						1LE1041									IE2	⑦
				1LE1023										Eagle Line	NPE (NEMA)	⑧
1LE10 . . - . . . . ■ -	■	. . .	Order code				1LE1021								NEE (NEMA)	⑨
Voltage at 60 Hz and required power at 60 Hz (continued)																
460 VY; 50 Hz power	9	0	**M2E**	✓	✓	✓	✓	✓	✓	✓	✓	✓	✓	Not for:	IEC IE3	③
460 VY; 60 Hz power	9	0	**M1E**	O	O	O	O	O	O	O	O	O	O	Not for:	APAC Line Eagle Line IEC IE3	⑥, ⑦ ⑧, ⑨ ③
460 VΔ; 50 Hz power	9	0	**M2F**	✓	✓	✓	✓	✓	✓	✓	✓	✓	✓	Not for:	IEC IE3	③
460 VΔ; 60 Hz power	9	0	**M1F**	O	O	O	O	O	O	O	O	O	O	Not for:	APAC Line Eagle Line IEC IE3	⑥, ⑦ ⑧, ⑨ ③
575 VY; 50 Hz power [7]	9	0	**M2G**	✓	✓	✓	✓	✓	✓	✓	✓	✓	✓	Not for:	IEC IE4 IEC IE3	① ③
575 VY; 60 Hz power [7]	9	0	**M1G**	✓	✓	✓	✓	✓	✓	✓	✓	✓	✓	Not for:	APAC Line Eagle Line IEC IE3	⑥, ⑦ ⑧, ⑨ ③
575 VΔ; 50 Hz power [7]	9	0	**M2H**	✓	✓	✓	✓	✓	✓	✓	✓	✓	✓	Not for:	IEC IE4 IEC IE3	① ③
575 VΔ; 60 Hz power [7]	9	0	**M1H**	✓	✓	✓	✓	✓	✓	✓	✓	✓	✓	Not for:	APAC Line Eagle Line IEC IE3	⑥, ⑦ ⑧, ⑨ ③
400 VΔ/690 VY; 50 Hz power [1]	9	0	**M2J**	✓	✓	✓	✓	✓	✓	✓	✓	✓	✓	Not for:	Eagle Line IEC IE3	⑧, ⑨ ③
400 VΔ; 50 Hz power				–	–	✓	✓	✓	✓	✓	✓	✓	✓	Only for:	Eagle Line IEC IE3	⑧, ⑨ ③
400 VΔ/690 VY; 60 Hz power	9	0	**M1J**	✓	✓	✓	✓	✓	✓	✓	✓	✓	✓	Not for:	Eagle Line IEC IE3	⑧, ⑨ ③
480 VY; 50 Hz power	9	0	**M2K**	✓	✓	✓	✓	✓	✓	✓	✓	✓	✓	Not for:	IEC IE3	③
480 VY; 60 Hz power	9	0	**M1K**	✓	✓	✓	✓	✓	✓	✓	✓	✓	✓	Not for:	Eagle Line IEC IE3	⑧, ⑨ ③
480 VΔ; 50 Hz power	9	0	**M2L**	✓	✓	✓	✓	✓	✓	✓	✓	✓	✓	Not for:	IEC IE3	③
480 VΔ; 60 Hz power	9	0	**M1L**	✓	✓	✓	✓	✓	✓	✓	✓	✓	✓	Not for:	Eagle Line IEC IE3	⑧, ⑨ ③
230 VΔ/400 VY; 50 Hz power	9	0	**M2M**	✓	✓	✓	✓	✓	✓	✓	✓	✓	✓	Not for:	IEC IE3	③
230 VΔ/400 VY; 60 Hz power	9	0	**M1M**	✓	✓	✓	✓	✓	✓	✓	✓	✓	✓	Not for:	Eagle Line IEC IE3	⑧, ⑨ ③
Voltage at 87 Hz and 87 Hz power																
400 VΔ [5]	9	0	**M3A**	–	–	✓	✓	✓	✓	✓	✓	✓	✓	Not for:	IEC IE3	③
Non-standard voltage and/or frequencies																
Non-standard winding [6]	9	0	**M1Y** • and customer specifications	✓	✓	✓	✓	✓	✓	✓	✓	✓	✓			

☐ Standard version
O Without additional charge
• This order code only determines the price of the version – Additional plain text is required.
✓ With additional charge
– Not possible

1) For North America export versions Eagle Line 1LE1021 NEMA Energy Efficient, 1LE1023 NEMA Premium Efficient and 1LE1083, voltages above 600 V will not be stamped.
2) Frame sizes 80 and 90 with voltage code 02 can only be supplied without motor protection (motor protection code letter A).
3) Delta connection is not possible.
4) Star connection is not possible.
5) Only possible for 4-pole, 6-pole and 8-pole motors. The operating data for converter operation is also provided in a table on the rating plate.
6) Plain text must be specified in the order: Voltage between 200 and 690 V (voltages outside this range are available on request), frequency, circuit, for 60 Hz additionally required rated power in kW.
7) Not possible for 2-pole and 4-pole motors with increased power (11th position of the Article No.: 6) in frame sizes 80 and 90.

© Innomotics 2024

Selection and ordering data

Voltages	Article No. supplement			Frame size						Motor version
	Voltage code 12th and 13th position of the Article No.		Additional identification code with order code and plain text if required	**100**	**112**	**132**	**160**	**180**	**200**	
				1LE1011						Pole-changing
				1LE1012						
1LE10 . . -	■ -	■ . . .	Order code							
Voltage at 50 Hz and 50 Hz power										
230 V	**2**	**2**	**–**	☐	☐	☐	☐	☐	☐	
400 V	**3**	**4**	**–**	☐	☐	☐	☐	☐	☐	
500 V	**4**	**0**	**–**	○	○	○	○	○	○	
690 V	**4**	**7**	**–**	○	○	○	○	○	○	
Voltage at 60 Hz and required power										
220 V; 50 Hz power	**9**	**0**	**M5K**	O. R.	O. R.	O. R.	O. R.	O. R.	O. R.	
220 V; 60 Hz power	**9**	**0**	**M5C**	O. R.	O. R.	O. R.	O. R.	O. R.	O. R.	
380 V; 50 Hz power	**9**	**0**	**M5L**	O. R.	O. R.	O. R.	O. R.	O. R.	O. R.	
380 V; 60 Hz power	**9**	**0**	**M5D**	O. R.	O. R.	O. R.	O. R.	O. R.	O. R.	
440 V; 50 Hz power	**9**	**0**	**M5M**	O. R.	O. R.	O. R.	O. R.	O. R.	O. R.	
440 V; 60 Hz power	**9**	**0**	**M5E**	O. R.	O. R.	O. R.	O. R.	O. R.	O. R.	
460 V; 50 Hz power	**9**	**0**	**M5N**	O. R.	O. R.	O. R.	O. R.	O. R.	O. R.	
460 V; 60 Hz power	**9**	**0**	**M5F**	O. R.	O. R.	O. R.	O. R.	O. R.	O. R.	
575 V; 50 Hz power	**9**	**0**	**M5P**	O. R.	O. R.	O. R.	O. R.	O. R.	O. R.	
575 V; 60 Hz power	**9**	**0**	**M5G**	O. R.	O. R.	O. R.	O. R.	O. R.	O. R.	
Non-standard voltage and/or frequencies										
Non-standard winding [1]	**9**	**0**	**M1Y** • and customer specifications	✓	✓	✓	✓	✓	✓	

☐ Standard version
○ Without additional charge
• This order code only determines the price of the version – Additional plain text is required.
✓ With additional charge
O. R. Possible on request

[1] Plain text must be specified in the order: Voltage between 200 and 690 V (voltages outside this range are available on request), frequency, circuit, for 60 Hz additionally required rated power in kW.

© Innomotics 2024

Innomotics GP and Innomotics SD standard motors

Cast-iron series Innomotics SD 1LE15 Basic Line, 1LE16 Performance Line

Selection and ordering data

Voltages	Article No. supplement: Voltage code 12th and 13th position of the Article No.		Additional identification code with order code and plain text if required	Frame size 71	80	90	100	112	132	160	180	200	225	250	280	315	Motor version		
							1LE1504 Basic Line										IEC	IE4	①
							1LE1604 Performance Line												②
				1LE1503 Basic Line														IE3	③
							1LE1603 Performance Line												④
							1LE1583												⑤
				1LE1501 Basic Line														IE2	⑥
							1LE1601 Performance Line												⑦
							1LE1502 Basic Line											IE1	⑧
					1LE1543 Basic Line												APAC Line	IE3	⑨
							1LE1643 Performance Line												⑩
											1LE1541 Basic Line							IE2	⑪
				1LE1523 Basic Line													Eagle Line	NPE (NEMA)	⑫
							1LE1623 Performance Line												⑬
1LE1 . . . - . . . . ■ - ■ . . .			Order code				1LE1521 Basic Line											NEE (NEMA)	⑭
Voltage at 50 Hz or 60 Hz																			
50 Hz 230 VΔ/400 VY, 60 Hz 460 VY	2	2	–	□	□	□	□	□	□	□	□	□	□	□	□	□			
50 Hz 400 VΔ/690 VY, 60 Hz 460 VΔ [1]	3	4	–	□	□	□	□	□	□	□	□	□	□	□	□	□	Not for:	APAC Line ⑨, ⑩, ⑪ Eagle Line ⑫, ⑬, ⑭	
50 Hz 400 VΔ, 60 Hz 460 VΔ [1]				□	□	□	□	□	□	□	□	□	□	□	□	□	Only for:	APAC Line ⑨, ⑩, ⑪ Eagle Line ⑫, ⑬, ⑭	
50 Hz 400 VY, 60 Hz 460 VY [2] [3]	0	2	–	□	□	□	□	□	□	□	□	□	□	□	□	□	Not for:	IEC IE3	⑤
50 Hz 400 VΔ, 60 Hz 460 VΔ [4]	0	4	–	□	□	□	□	□	□	□	□	□	□	□	□	□	Not for:	IEC IE3	⑤
50 Hz 500 VY 60 Hz 575 VY	2	7	–	○	○	○	○	○	○	○	○	○	○	○	○	○	Not for:	IEC IE4 ①, ② frame sizes 100 … 160	
50 Hz 500 VΔ, 60 Hz 575 VΔ	4	0	–	–	–	–	○	○	○	○	○	○	○	○	○	○	Not for:	IEC IE4 ①, ② frame sizes 100 … 160	
50 Hz 690 VY	0	6	–	–	–	–	○	○	○	○	○	○	○	○	○	○	Only for:	IEC IE3	⑤
50 Hz 690 VΔ	4	7	–	–	–	–	✓	✓	✓	✓	✓	✓	✓	✓	✓	✓	Only for:	IEC IE3	⑤
50 Hz 220 VΔ/380 VY, 60 Hz 440 VY	2	1	–	✓	✓	✓	✓	✓	✓	✓	✓	✓	✓	✓	✓	✓	Not for:	IEC IE3	⑤
50 Hz 380 VΔ/660 VY, 60 Hz 440 VΔ [1]	3	3	–	✓	✓	✓	✓	✓	✓	✓	✓	✓	✓	✓	✓	✓	Not for:	APAC Line ⑨, ⑩, ⑪ Eagle Line ⑫, ⑬, ⑭ IEC IE3 ⑤	
50 Hz 380 VΔ [1] 60 Hz 440 VΔ				✓	✓	✓	✓	✓	✓	✓	✓	✓	✓	✓	✓	✓	Only for:	APAC Line ⑨, ⑩, ⑪ Eagle Line ⑫, ⑬, ⑭	
50 Hz 240 VΔ/415 VY, 60 Hz 480 VY	2	3	–	✓	✓	✓	✓	✓	✓	✓	✓	✓	✓	✓	✓	✓	Not for:	IEC IE3	⑤
50 Hz 415 VΔ, 60 Hz 480 VΔ	3	5	–	✓	✓	✓	✓	✓	✓	✓	✓	✓	✓	✓	✓	✓	Not for:	IEC IE3	⑤
60 Hz 220 VΔ/380 VY	1	7	–	✓	✓	✓	✓	✓	✓	✓	✓	✓	✓	✓	✓	✓	Only for:	IEC IE1 IEC IE2	
60 Hz 230 VΔ/400 VY	1	8	–	✓	✓	✓	✓	✓	✓	✓	✓	✓	✓	✓	✓	✓	Only for:	IEC IE1 IEC IE2	
60 Hz 380 VΔ/660 VY [1]	3	0	–	✓	✓	✓	✓	✓	✓	✓	✓	✓	✓	✓	✓	✓	Only for:	IEC IE1 IEC IE2	
60 Hz 380 VΔ [1]				✓	✓	✓	✓	✓	✓	✓	✓	✓	✓	✓	✓	✓	Only for:	IEC IE1 IEC IE2	
60 Hz 400 VΔ/690 VY [1]	3	1	–	✓	✓	✓	✓	✓	✓	✓	✓	✓	✓	✓	✓	✓	Only for:	IEC IE1 IEC IE2	
60 Hz 400 VΔ [1]				✓	✓	✓	✓	✓	✓	✓	✓	✓	✓	✓	✓	✓	Only for:	IEC IE1 IEC IE2	
Voltage at 60 Hz and required power																			
220 VΔ/380 VY; 50 Hz power	9	0	M2A	✓	✓	✓	✓	✓	✓	✓	✓	✓	✓	✓	✓	✓	Not for:	IEC IE3	⑤
220 VΔ/380 VY; 60 Hz power [2]	9	0	M1A	✓	✓	✓	✓	✓	✓	✓	✓	✓	✓	✓	✓	✓	Not for:	APAC Line ⑨, ⑩, ⑪ Eagle Line ⑫, ⑬, ⑭ IEC IE3 ⑤	
380 VΔ/660 VY; 50 Hz power [1]	9	0	M2B	–	–	–	✓	✓	✓	✓	✓	✓	✓	✓	✓	✓	Not for:	APAC Line ⑨, ⑩, ⑪ Eagle Line ⑫, ⑬, ⑭ IEC IE3 ⑤	
380 VΔ; 50 Hz power [1]				–	–	–	✓	✓	✓	✓	✓	✓	✓	✓	✓	✓	Only for:	APAC Line ⑨, ⑩, ⑪ Eagle Line ⑨, ⑩, ⑪	
380 VΔ/660 VY; 60 Hz power [1] [2]	9	0	M1B	–	–	–	✓	✓	✓	✓	✓	✓	✓	✓	✓	✓	Not for:	APAC Line ⑨, ⑩, ⑪ Eagle Line ⑫, ⑬, ⑭ IEC IE3 ⑤	
440 VY; 50 Hz power	9	0	M2C	–	–	–	✓	✓	✓	✓	✓	✓	✓	✓	✓	✓	Not for:	IEC IE3	⑤
440 VY; 60 Hz power [2]	9	0	M1C	–	–	–	✓	✓	✓	✓	✓	✓	✓	✓	✓	✓	Not for:	APAC Line ⑧, ⑨, ⑩ Eagle Line ⑪, ⑫, ⑬	

For legends and footnotes, see page 3/105.

© Innomotics 2024

Innomotics GP and Innomotics SD standard motors

Cast-iron series Innomotics SD 1LE15 Basic Line, 1LE16 Performance Line

Voltages	Article No. supplement: Voltage code 12th and 13th position of the Article No.		Additional identification code with order code and plain text if required	Frame size 71	80	90	100	112	132	160	180	200	225	250	280	315	Motor version		
							1LE1504 Basic Line										IEC	IE4	①
							1LE1604 Performance Line												②
				1LE1503 Basic Line														IE3	③
							1LE1603 Performance Line												④
							1LE1583												⑤
				1LE1501 Basic Line														IE2	⑥
							1LE1601 Performance Line												⑦
							1LE1502 Basic Line											IE1	⑧
					1LE1543 Basic Line												APAC Line	IE3	⑨
							1LE1643 Performance Line												⑩
											1LE1541 Basic Line							IE2	⑪
				1LE1523 Basic Line													Eagle Line	NPE (NEMA)	⑫
			Order code				1LE1623 Performance Line												⑬
1LE1 . . . -	■ -	■ . . .					1LE1521 Basic Line											NEE (NEMA)	⑭
Voltage at 60 Hz and required power (continued)																			
440 VΔ; 50 Hz power	9	0	**M2D**	–	–	–	✓	✓	✓	✓	✓	✓	✓	✓	✓	✓	Not for:	IEC IE3	⑤
440 VΔ; 60 Hz power [2]	9	0	**M1D**	–	–	–	✓	✓	✓	✓	✓	✓	✓	✓	✓	✓	Not for:	APAC Line ⑨, ⑩, ⑪ Eagle Line ⑫, ⑬, ⑭ IEC IE3 ⑤	
460 VY; 50 Hz power	9	0	**M2E**	–	–	–	✓	✓	✓	✓	✓	✓	✓	✓	✓	✓	Not for:	IEC IE3	⑤
460 VY; 60 Hz power [2]	9	0	**M1E**	–	–	–	○	○	○	○	○	○	○	○	○	○	Not for:	APAC Line ⑨, ⑩, ⑪ Eagle Line ⑫, ⑬, ⑭ IEC IE3 ⑤	
460 VΔ; 50 Hz power	9	0	**M2F**	–	–	–	✓	✓	✓	✓	✓	✓	✓	✓	✓	✓	Not for:	IEC IE3	⑤
460 VΔ; 60 Hz power [2]	9	0	**M1F**	–	–	–	○	○	○	○	○	○	○	○	○	○	Not for:	APAC Line ⑨, ⑩, ⑪ Eagle Line ⑫, ⑬, ⑭ IEC IE3 ⑤	
575 VY; 50 Hz power	9	0	**M2G**	–	–	–	✓	✓	✓	✓	✓	✓	✓	✓	✓	✓	Not for:	IEC IE4 ①, ② frame sizes 100 … 160 IEC IE3 ⑤	
575 VY; 60 Hz power [2]	9	0	**M1G**	–	–	–	✓	✓	✓	✓	✓	✓	✓	✓	✓	✓	Not for:	⑪, ⑫, ⑬, ⑭ and ①, ② frame sizes 100 … 160	
575 VΔ; 50 Hz power	9	0	**M2H**	–	–	–	✓	✓	✓	✓	✓	✓	✓	✓	✓	✓	Not for:	IEC IE4 ①, ② frame sizes 100 … 160 IEC IE3 ⑤	
575 VΔ; 60 Hz power [2]	9	0	**M1H**	–	–	–	✓	✓	✓	✓	✓	✓	✓	✓	✓	✓	Not for:	⑪, ⑫, ⑬, ⑭ and ①, ② frame sizes 100 … 160	
400 VΔ/690 VY; 50 Hz power [1]	9	0	**M2J**	✓	✓	✓	✓	✓	✓	✓	✓	✓	✓	✓	✓	✓	Not for:	IEC IE1 ⑧ Eagle Line ⑫, ⑬	
400 VΔ; 50 Hz power [1]				✓	✓	✓	✓	✓	✓	✓	✓	✓	✓	✓	✓	✓	Only for:	IEC IE1 ⑧ Eagle Line ⑫, ⑬	
400 VΔ/690 VY; 60 Hz power	9	0	**M1J**	✓	✓	✓	✓	✓	✓	✓	✓	✓	✓	✓	✓	✓	Not for:	IEC IE1 ⑧ Eagle Line ⑫, ⑬	
480 VY; 50 Hz power	9	0	**M2K**	✓	✓	✓	✓	✓	✓	✓	✓	✓	✓	✓	✓	✓	Not for:	IEC IE3	⑤
480 VY; 60 Hz power	9	0	**M1K**	✓	✓	✓	✓	✓	✓	✓	✓	✓	✓	✓	✓	✓	Not for:	IEC IE1 ⑧ Eagle Line ⑫, ⑬	
480 VΔ; 50 Hz power	9	0	**M2L**	✓	✓	✓	✓	✓	✓	✓	✓	✓	✓	✓	✓	✓	Not for:	IEC IE3	⑤
480 VΔ; 60 Hz power	9	0	**M1L**	✓	✓	✓	✓	✓	✓	✓	✓	✓	✓	✓	✓	✓	Not for:	IEC IE1 ⑧ Eagle Line ⑫, ⑬	
230 VΔ/400 VY; 50 Hz power	9	0	**M2M**	✓	✓	✓	✓	✓	✓	✓	✓	✓	✓	✓	✓	✓	Not for:	IEC IE3	⑤
230 VΔ/400 VY; 60 Hz power	9	0	**M1M**	✓	✓	✓	✓	✓	✓	✓	✓	✓	✓	✓	✓	✓	Not for:	IEC IE1 ⑧ Eagle Line ⑫, ⑬	
Voltage at 87 Hz and 87 Hz power																			
400 VΔ [5]	9	0	**M3A**	✓	✓	✓	✓	✓	✓	✓	✓	✓	✓	✓	✓	✓	Not for:	IEC IE3	⑤
Non-standard voltage and/or frequencies																			
Non-standard winding [6]	9	0	**M1Y** • and customer specifications	✓	✓	✓	✓	✓	✓	✓	✓	✓	✓	✓	✓	✓			

☐ Standard version
○ Without additional charge
✓ With additional charge
O. R. Possible on request

– Not possible
• This order code only determines the price of the version – Additional plain text is required.

[1] For North America export versions Eagle Line 1LE1521 NEMA Energy Efficient, 1LE1523/1LE1623 NEMA Premium Efficient and 1LE583, voltages above 600 V will not be stamped.
[2] Not admissible for North America export versions Eagle Line 1LE1521 NEMA Energy Efficient and 1LE1523/1LE1623 NEMA Premium Efficient.
[3] Delta connection is not possible.
[4] Star connection is not possible.
[5] Only possible for 4-pole, 6-pole and 8-pole motors. The operating data for converter operation is also provided in a table on the rating plate.
[6] Plain text must be specified in the order: Voltage between 200 and 690 V (voltages outside this range are available on request), frequency, circuit, for 60 Hz additionally required rated power in kW.

© Innomotics 2024

Innomotics GP and Innomotics SD standard motors

Aluminum series Innomotics GP 1LE1073 and cast-iron series Innomotics SD 1LE1573, 1LE5773

Selection and ordering data

Voltages	Article No. supplement: Voltage code 12th and 13th position of the Article No.		Additional identification code with order code and plain text if required	Frame size 80	90	100	112	132	160	180	200	225	250	280	315	Motor version IEC	IE3
				1LE1073													
										1LE1573							
														1LE5773			
1LE . . . . -	■ -	■ . . .	Order code														
Voltage at 60 Hz and 50 Hz power																	
220 VΔ/380 VYY, 440 VΔ 50 Hz power	6	4	–	☐	☐	☐	☐	☐	☐	☐	☐	☐	☐	☐	☐		
220 VΔ/380 VY; 50 Hz power	9	0	M2A	✓	✓	✓	✓	✓	✓	✓	✓	✓	✓	✓	–		
380 VΔ/660 VY; 50 Hz power	9	0	M2B	✓	✓	✓	✓	✓	✓	✓	✓	✓	✓	✓	✓		
440 VY; 50 Hz power	9	0	M2C	✓	✓	✓	✓	✓	✓	✓	✓	✓	✓	✓	–		
440 VΔ; 50 Hz power	9	0	M2D	✓	✓	✓	✓	✓	✓	✓	✓	✓	✓	✓	✓		
460 VY; 50 Hz power	9	0	M2E	✓	✓	✓	✓	✓	✓	✓	✓	✓	✓	✓	–		
460 VΔ; 50 Hz power	9	0	M2F	✓	✓	✓	✓	✓	✓	✓	✓	✓	✓	✓	✓		
575 VY; 50 Hz power	9	0	M2G	✓	✓	✓	✓	✓	✓	✓	✓	✓	✓	✓	–		
575 VΔ; 50 Hz power	9	0	M2H	✓	✓	✓	✓	✓	✓	✓	✓	✓	✓	✓	✓		
400 VΔ/690 VY; 50 Hz power	9	0	M2J	✓	✓	✓	✓	✓	✓	✓	✓	✓	✓	✓	✓		
480 VY; 50 Hz power	9	0	M2K	✓	✓	✓	✓	✓	✓	✓	✓	✓	✓	✓	–		
480 VΔ; 50 Hz power	9	0	M2L	✓	✓	✓	✓	✓	✓	✓	✓	✓	✓	✓	✓		
230 VΔ/400 VY; 50 Hz power	9	0	M2M	✓	✓	✓	✓	✓	✓	✓	✓	✓	✓	✓	–		
Non-standard voltage and/or frequencies																	
Non-standard winding [1]	9	0	M1Y • and customer specifications	✓	✓	✓	✓	✓	✓	✓	✓	✓	✓	✓	✓		

☐ Standard version
✓ With additional charge
• This order code only determines the price of the version – Additional plain text is required.
– Not possible

[1] Plain text must be specified in the order: Voltage between 200 and 690 V (voltages outside this range are available on request), frequency, circuit, for 60 Hz additionally required rated power in kW.

© Innomotics 2024

Selection and ordering data

Frame size	63	71	80	90	100	112	132	160	180	200	Motor version		
					1LE1004						IEC	IE4	①
	1LE1003											IE3	②
					1LE1083								③
	1LE1001											IE2	④
	1LE1002											IE1	⑤
	1LE1043										APAC Line	IE3	⑥
			1LE1041									IE2	⑦
	1LE1023										Eagle Line	NPE (NEMA)	⑧
				1LE1021								NEE (NEMA)	⑨
					1LE1011						Pole-changing		⑩
					1LE1012								⑪

Types of construction	Article No. supplement: Type of construction code letter 14th position of the Article No.	Article No. supplement: For types of construction with order code(s) Article No. with additional identification code -Z	63	71	80	90	100	112	132	160	180	200	Motor version	
1LE10 . . - . . . . . - . ■ . . (-Z)		Order code												
Without flange														
IM B3 [1) 2) 3)]	A	–	☐	☐	☐	☐	☐	☐	☐	☐	☐	☐	Not for:	APAC Line IE2 ⑦ Eagle Line NEE ⑨
IM B6 [2) 3)] 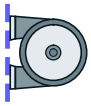	T	–	☐	☐	☐	☐	☐	☐	☐	☐	☐	☐	Not for:	APAC Line IE2 ⑦ Eagle Line NEE ⑨
IM B7 [2) 3) 9)] 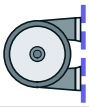	U	–	☐	☐	☐	☐	☐	☐	☐	☐	☐	☐	Not for:	APAC Line IE2 ⑦ Eagle Line NEE ⑨
IM B8 [2) 3)]	V	–	☐	☐	☐	☐	☐	☐	☐	☐	☐	☐	Not for:	APAC Line IE2 ⑦ Eagle Line NEE ⑨
IM V6 [2) 3)]	D	–	☐	☐	☐	☐	☐	☐	☐	☐	☐	☐	Not for:	APAC Line IE2 ⑦ Eagle Line NEE ⑨
IM V5 without protective cover [2) 3)] 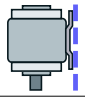	C	–	☐	☐	☐	☐	☐	☐	☐	☐	☐	☐	Not for:	APAC Line IE2 ⑦ Eagle Line NEE ⑨
IM V5 with protective cover [2) 3) 4) 5) 6)] 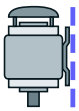	C	H00	✓	✓	✓	✓	✓	✓	✓	✓	✓	✓	Not for:	APAC Line IE2 ⑦ Eagle Line NEE ⑨ Combination with order code F90
With flange	EN 50347 DIN 42948		FF115 A 140	FF130 A 160	FF165 A 200	FF165 A 200	FF215 A 250	FF215 A 250	FF265 A 300	FF300 A 350	FF300 A 350	FF350 A 400		
IM B5 [2) 7)] 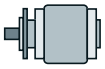	F	–	✓	✓	✓	✓	✓	✓	✓	✓	✓	✓		
IM V1 without protective cover [2)]	G	–	✓	✓	✓	✓	✓	✓	✓	✓	✓	✓		
IM V1 with protective cover [2) 4) 5) 6)]	G	H00	✓	✓	✓	✓	✓	✓	✓	✓	✓	✓	Not for:	Combination with order code F90
IM V3 [4)]	H	–	✓	✓	✓	✓	✓	✓	✓	✓	✓	✓		
IM B35 [3)] 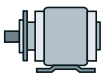	J	–	✓	✓	✓	✓	✓	✓	✓	✓	✓	✓	Not for:	APAC Line IE2 ⑦ Eagle Line NEE ⑨

For legends and footnotes, see page 3/110.

© Innomotics 2024

Innomotics GP and Innomotics SD standard motors

Aluminum series Innomotics GP 1LE10

Frame size	63	71	80	90	100	112	132	160	180	200	Motor version		
					1LE1004						IEC	IE4	①
	1LE1003											IE3	②
					1LE1083								③
	1LE1001											IE2	④
	1LE1002											IE1	⑤
	1LE1043										APAC Line	IE3	⑥
			1LE1041									IE2	⑦
	1LE1023										Eagle Line	NPE (NEMA)	⑧
				1LE1021								NEE (NEMA)	⑨
					1LE1011						Pole-changing		⑩
					1LE1012								⑪

Types of construction	Article No. supplement: Type of construction code letter 14th position of the Article No.	Article No. supplement: For types of construction with order code(s) Article No. with additional identification code -Z	63	71	80	90	100	112	132	160	180	200	Motor version	
1LE10 . . - . . . . . - . ■ . . (-Z)		Order code												
With flange next largest	**EN 50347** / **DIN 42948**		– / –	– / –	– / –	**FF215** / **A 250**	**FF265** / **A 300**	**FF265** / **A 300**	**FF300** / **A 350**	– / –	– / –	– / –		
IM B5 2) 7) 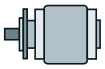	**F**	**P01**	–	–	–	✓	✓	✓	✓	–	–	–		
IM V1 without protective cover 2)	**G**	**P01**	–	–	–	✓	✓	✓	✓	–	–	–		
IM V1 with protective cover 2) 4) 5) 6)	**G**	**P01+H00**	–	–	–	✓	✓	✓	✓	–	–	–	Not for:	Combination with order code F90
IM V3 4)	**H**	**P01**	–	–	–	✓	✓	✓	✓	–	–	–		
IM B35 3) 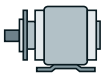	**J**	**P01**	–	–	–	✓	✓	✓	✓	–	–	–	Not for:	APAC Line IE2 ⑦ Eagle Line NEE ⑨
With flange next smallest	**EN 50347** / **DIN 42948**		**FF100** / **A 120**	**FF115** / **A 140**	**FF130** / **A 160**	**FF165** / **A 200**	**FF165** / **A 200**	**FF165** / **A 200**	**FF215** / **A 250**	**FF265** / **A 300**	**FF265** / **A 300**	**FF300** / **A 350**		
IM B5 2) 7) 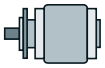	**F**	**P02**	✓	✓	✓	–	✓	✓	✓	✓	✓	✓	Not for:	IEC IE3 ③
IM V1 without protective cover 2)	**G**	**P02**	✓	✓	✓	–	✓	✓	✓	✓	✓	✓	Not for:	IEC IE3 ③
IM V1 with protective cover 2) 4) 5) 6)	**G**	**P02+H00**	✓	✓	✓	–	✓	✓	✓	✓	✓	✓	Not for:	Combination with order code F90 IEC IE3 ③
IM V3 4)	**H**	**P02**	✓	✓	✓	–	✓	✓	✓	✓	✓	✓	Not for:	IEC IE3 ③
IM B35 3) 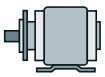	**J**	**P02**	✓	✓	✓	–	✓	✓	✓	✓	✓	✓	Not for:	APAC Line IE2 ⑦ Eagle Line NEE ⑨

For legends and footnotes, see page 3/110.

© Innomotics 2024

Innomotics GP and Innomotics SD standard motors

Aluminum series Innomotics GP 1LE10

Frame size	63	71	80	90	100	112	132	160	180	200	Motor version		
1LE1004					1LE1004	1LE1004	1LE1004	1LE1004	1LE1004	1LE1004	IEC	IE4	①
1LE1003	1LE1003	1LE1003	1LE1003	1LE1003	1LE1003	1LE1003	1LE1003	1LE1003	1LE1003	1LE1003		IE3	②
1LE1083					1LE1083	1LE1083	1LE1083	1LE1083	1LE1083	1LE1083			③
1LE1001	1LE1001	1LE1001	1LE1001	1LE1001	1LE1001	1LE1001	1LE1001	1LE1001	1LE1001	1LE1001		IE2	④
1LE1002	1LE1002	1LE1002	1LE1002	1LE1002	1LE1002	1LE1002	1LE1002	1LE1002	1LE1002	1LE1002		IE1	⑤
1LE1043	1LE1043	1LE1043	1LE1043	1LE1043	1LE1043	1LE1043	1LE1043	1LE1043	1LE1043	1LE1043	APAC Line	IE3	⑥
1LE1041			1LE1041	1LE1041	1LE1041	1LE1041	1LE1041	1LE1041	1LE1041			IE2	⑦
1LE1023	1LE1023	1LE1023	1LE1023	1LE1023	1LE1023	1LE1023	1LE1023	1LE1023	1LE1023	1LE1023	Eagle Line	NPE (NEMA)	⑧
1LE1021				1LE1021								NEE (NEMA)	⑨
1LE1011					1LE1011	1LE1011	1LE1011	1LE1011	1LE1011	1LE1011	Pole-changing		⑩
1LE1012					1LE1012	1LE1012	1LE1012	1LE1012	1LE1012	1LE1012			⑪

Types of construction	Article No. supplement: Type of construction code letter 14th position of the Article No.	For types of construction with order code(s) Article No. with additional identification code -Z	63	71	80	90	100	112	132	160	180	200	Motor version		
1LE10 . . - . . . . . - . ■ . . (-Z)		Order code													
With flange	**EN 50347 / DIN 42948**		**FT75 / C 90**	**FT85 / C 105**	**FT100 / C 120**	**FT115 / C 140**	**FT130 / C 160**	**FT130 / C 160**	**FT165 / C 200**	**FT215 / C 250**	**– / –**	**– / –**			
IM B14 2) 8)	**K**	**–**	✓	✓	✓	✓	✓	✓	✓	✓	–	–			
IM V19 2)	**L**	**–**	✓	✓	✓	✓	✓	✓	✓	✓	–	–			
IM V18 without protective cover 2) 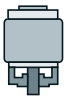	**M**	**–**	✓	✓	✓	✓	✓	✓	✓	✓	–	–			
IM V18 with protective cover 2) 4) 5) 6) 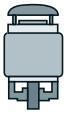	**M**	**H00**	✓	✓	✓	✓	✓	✓	✓	✓	–	–	Not for:	Combination with order code F90	
IM B34 3)	**N**	**–**	✓	✓	✓	✓	✓	✓	✓	✓	–	–	Not for:	Eagle Line NEE ⑨	
With flange next largest 10)	**EN 50347 / DIN 42948**		**FT100 / C 120**	**FT115 / C 140**	**FT130 / C 160**	**FT130 / C 160**	**FT165 / C 200**	**FT165 / C 200**	**FT215 / C 250**	**– / –**	**– / –**	**– / –**			
IM B14 2) 8)	**K**	**P01**	✓	✓	✓	✓	✓	✓	✓	–	–	–			
IM V19 2)	**L**	**P01**	✓	✓	✓	✓	✓	✓	✓	–	–	–			
IM V18 without protective cover 2)	**M**	**P01**	✓	✓	✓	✓	✓	✓	✓	–	–	–			
IM V18 with protective cover 2) 4) 5) 6) 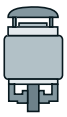	**M**	**P01+H00**	✓	✓	✓	✓	✓	✓	✓	–	–	–	Not for:	Combination with order code F90	
IM B34 3)	**N**	**P01**	✓	✓	✓	✓	✓	✓	✓	–	–	–	Not for:	APAC Line IE2 ⑦ Eagle Line NEE ⑨	

For legends and footnotes, see page 3/110.

© Innomotics 2024

Innomotics GP and Innomotics SD standard motors

Aluminum series Innomotics GP 1LE10

Types of construction	Article No. supplement: Type of construction code letter 14th position of the Article No.	Article No. supplement: For types of construction with order code(s) Article No. with additional identification code -Z	Frame size 63	71	80	90	100	112	132	160	180	200	Motor version		
							1LE1004						IEC	IE4	①
			1LE1003											IE3	②
							1LE1083								③
			1LE1001											IE2	④
			1LE1002											IE1	⑤
			1LE1043										APAC Line	IE3	⑥
					1LE1041									IE2	⑦
			1LE1023										Eagle Line	NPE (NEMA)	⑧
						1LE1021								NEE (NEMA)	⑨
							1LE1011						Pole-changing		⑩
1LE10 . . - . . . . . - .	■ . . (-Z)	Order code					1LE1012								⑪

With flange next smallest		EN 50347 / DIN 42948		FT65 / C 80	FT75 / C 90	– / –	– / –	FT115 / C 140	– / –	– / –	– / –	– / –	– / –		
IM B14 2) 8)		K	P02	✓	✓	–	–	✓	–	–	–	–	–	Not for:	EC IE4 ① IEC IE3 ③
IM V19 2)		L	P02	✓	✓	–	–	✓	–	–	–	–	–	Not for:	IEC IE4 ① IEC IE3 ③
IM V18 without protective cover 2)	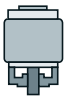	M	P02	✓	✓	–	–	✓	–	–	–	–	–	Not for:	IEC IE4 ① IEC IE3 ③
IM V18 with protective cover 2) 4) 5) 6)	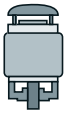	M	P02+H00	✓	✓	–	–	✓	–	–	–	–	–	Not for:	IEC IE4 ① Combination with order code F90 IEC IE3 ③
IM B34 3)		N	P02	✓	✓	–	–	✓	–	–	–	–	–	Not for:	IEC IE4 ① IEC IE3 ③ APAC Line IE2 ⑦ Eagle Line NEE ⑨

☐ Standard version
✓ With additional charge
– Not possible

1) The types of construction IM B6/7/8, IM V6 and IM V5 with/without protective cover are also possible as long as there are no condensation drainage holes (order code **H03**) and these types of construction do not have to be stamped on the rating plate. As standard the type of construction IM B3 is then stamped on the rating plate. With type of construction IM V5 with protective cover, the protective cover has to be additionally ordered with order code **H00**. The protective cover is not stamped on the rating plate.

2) The type of construction is stamped on the rating plate. For orders with condensation drainage holes (order code **H03**), if mounted in a different position, the position must be specified to ensure that the condensation drainage holes are positioned correctly.

3) For North America export version Eagle Line 1LE1021 NEMA Energy Efficient, types of construction with feet are not possible for 2-pole, 4-pole and 6-pole motors ≤ 200 hp in accordance with NEMA MG1 Table 12-11.

4) The "Standard cylindrical shaft extension (second shaft extension)" option (order code **L05**) is not possible.

5) In combination with an encoder, it is not necessary to order the protective cover (order code **H00**), as this is delivered as a protection for the encoder as standard. In this case the protective cover is standard version (without additional charge).

6) Not possible for forced-air cooled 1LE1 motors with order code **F90** without external fan and fan cover.

7) The types of construction IM V3 and IM V1 with/without protective cover are also possible as long as there are no condensation drainage holes (order code **H03**) and these types of construction do not have to be stamped on the rating plate. As standard the type of construction IM B5 is then stamped on the rating plate. With type of construction IM V1 with protective cover, the protective cover has to be additionally ordered with order code **H00**. The protective cover is not stamped on the rating plate.

8) The types of construction IM V19 and IM V18 with/without protective cover are also possible as long as there are no condensation drainage holes (order code **H03**) and these types of construction do not have to be stamped on the rating plate. As standard the type of construction IM B14 is then stamped on the rating plate. With type of construction IM V18 with protective cover, the protective cover has to be additionally ordered with order code **H00**. The protective cover is not stamped on the rating plate.

9) When ordering frame size B7 and the required cable outlet below, option **R12** must also be ordered.

10) For the standard EN 50347, flanges which are 2 levels larger are used in frame size 80 with option **P01**.

© Innomotics 2024

Innomotics GP and Innomotics SD standard motors

Cast-iron series Innomotics SD 1LE15 Basic Line, 1LE16 Performance Line

Selection and ordering data

Types of construction	Article No. supplement		Frame size 71	80	90	100	112	132	160	180	200	225	250	280	315 S/M	315 L 2-pole	315 L 4- to 8-pole	Motor version		
	Type of construction code letter 14th position of the Article No.	For types of construction with order code(s) Article No. with additional identification code -Z				1LE1504 Basic Line												IEC	IE4	①
						1LE1604 Performance Line														②
			1LE1503 Basic Line																IE3	③
						1LE1603 Performance Line														④
						1LE1583														⑤
			1LE1501 Basic Line																IE2	⑥
						1LE1601 Performance Line														⑦
						1LE1502 Basic Line													IE1	⑧
				1LE1543 Basic Line														APAC Line	IE3	⑨
						1LE1643 Performance Line														⑩
										1LE1541 Basic Line									IE2	⑪
			1LE1523 Basic Line															Eagle Line	NPE (NEMA)	⑫
						1LE1623 Performance Line														⑬
1LE1 . . . - . . . . . - .	■ . . (-Z)	Order code				1LE1521 Basic Line													NEE (NEMA)	⑭
Without flange																				
IM B3 1) 2) 3)	A	–	☐	☐	☐	☐	☐	☐	☐	☐	☐	☐	☐	☐	☐	☐	☐	Not for:	⑪, ⑭ 2, 4, 6-pole ≤ 200 hp; ⑫, ⑬ 8-pole ≤ 200 hp	
IM B6 2) 3) 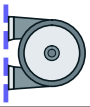	T	–	☐	☐	☐	☐	☐	☐	☐	☐	☐	☐	☐	☐	☐	☐	☐	Not for:	⑪, ⑭ 2, 4, 6-pole ≤ 200 hp; ⑫, ⑬ 8-pole ≤ 200 hp	
IM B7 2) 3) 9) 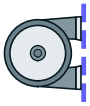	U	–	☐	☐	☐	☐	☐	☐	☐	☐	☐	☐	☐	☐	☐	☐	☐	Not for:	⑪, ⑭ 2, 4, 6-pole ≤ 200 hp; ⑫, ⑬ 8-pole ≤ 200 hp	
IM B8 2) 3)	V	–	☐	☐	☐	☐	☐	☐	☐	☐	☐	☐	☐	☐	☐	☐	☐	Not for:	⑪, ⑭ 2, 4, 6-pole ≤ 200 hp; ⑫, ⑬ 8-pole ≤ 200 hp	
IM V6 2) 3)	D	–	☐	☐	☐	☐	☐	☐	☐	☐	☐	☐	☐	☐	☐	✓	☐	Not for:	⑪, ⑭ 2, 4, 6-pole ≤ 200 hp; ⑫, ⑬ 8-pole ≤ 200 hp	
IM V5 without protective cover 2) 3)	C	–	☐	☐	☐	☐	☐	☐	☐	☐	☐	☐	☐	☐	☐	✓	☐	Not for:	⑪, ⑭ 2, 4, 6-pole ≤ 200 hp; ⑫, ⑬ 8-pole ≤ 200 hp	
IM V5 with protective cover 2) 3) 4) 5)	C	H00	✓	✓	✓	✓	✓	✓	✓	✓	✓	✓	✓	✓	✓	✓	✓	Not for:	⑪, ⑭ 2, 4, 6-pole ≤ 200 hp; ⑫, ⑬ 8-pole ≤ 200 hp	

For legends and footnotes, see page 3/115.

© Innomotics 2024

Innomotics GP and Innomotics SD standard motors

Cast-iron series Innomotics SD 1LE15 Basic Line, 1LE16 Performance Line

Types of construction	Article No. supplement		Frame size															Motor version		
			71	80	90	100	112	132	160	180	200	225	250	280	315 S/M	315 L 2-pole	315 L 4- to 8-pole			
	Type of construction code letter 14th position of the Article No.	For types of construction with order code(s) Article No. with additional identification code -Z				1LE1504 Basic Line												IEC	IE4	①
						1LE1604 Performance Line														②
			1LE1503 Basic Line																IE3	③
						1LE1603 Performance Line														④
						1LE1583														⑤
			1LE1501 Basic Line																IE2	⑥
						1LE1601 Performance Line														⑦
						1LE1502 Basic Line													IE1	⑧
				1LE1543 Basic Line														APAC Line	IE3	⑨
						1LE1643 Performance Line														⑩
										1LE1541 Basic Line									IE2	⑪
			1LE1523 Basic Line															Eagle Line	NPE (NEMA)	⑫
						1LE1623 Performance Line														⑬
1LE1 . . . - . . . . . - .	■ . . (-Z)	Order code				1LE1521 Basic Line													NEE (NEMA)	⑭
With flange	**EN 50347**		**FF130**	**FF165**	**FF165**	**FF215**	**FF215**	**FF265**	**FF300**	**FF300**	**FF350**	**FF400**	**FF500**	**FF500**	**FF600**	**FF600**	**FF600**			
	DIN 42948		**A 160**	**A 200**	**A 200**	**A 250**	**A 250**	**A 300**	**A 350**	**A 350**	**A 400**	**A 450**	**A 550**	**A 550**	**A 660**	**A 660**	**A 660**			
IM B5 2) 6) 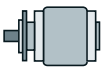	**F**	**–**	✓	✓	✓	✓	✓	✓	✓	✓	✓	✓	✓	✓	✓	–	–			
IM V1 without protective cover 2)	**G**	**–**	✓	✓	✓	✓	✓	✓	✓	✓	✓	✓	✓	✓	✓	✓	✓			
IM V1 with protective cover 2) 4) 5)	**G**	**H00**	✓	✓	✓	✓	✓	✓	✓	✓	✓	✓	✓	✓	✓	✓	✓			
IM V3 5)	**H**	**–**	✓	✓	✓	✓	✓	✓	✓	✓	✓	✓	✓	✓	✓	–	–			
IM B35 3) 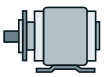	**J**	**–**	✓	✓	✓	✓	✓	✓	✓	✓	✓	✓	✓	✓	✓	✓	✓	Not for:	⑪, ⑭ 2, 4, 6-pole ≤ 200 hp; ⑫, ⑬ 8-pole ≤ 200 hp	
With flange next largest	**EN 50347**		**–**	**–**	**FF215**	**FF265**	**FF265**	**FF300**	**–**	**–**	**–**	**–**	**–**	**–**	**–**	**–**	**–**			
	DIN 42948		**–**	**–**	**A 250**	**A 300**	**A 300**	**A 350**	**–**	**–**	**–**	**–**	**–**	**–**	**–**	**–**	**–**			
IM B5 2) 6) 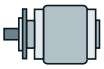	**F**	**P01**	–	–	✓	✓	✓	✓	–	–	–	–	–	–	–	–	–	Not for:	IEC IE3 ⑤	
IM V1 without protective cover 2)	**G**	**P01**	–	–	✓	✓	✓	✓	–	–	–	–	–	–	–	–	–	Not for:	IEC IE3 ⑤	
IM V1 with protective cover 2) 4) 5)	**G**	**P01+ H00**	–	–	✓	✓	✓	✓	–	–	–	–	–	–	–	–	–	Not for:	IEC IE3 ⑤	
IM V3 5)	**H**	**P01**	–	–	✓	✓	✓	✓	–	–	–	–	–	–	–	–	–	Not for:	IEC IE3 ⑤	
IM B35 3) 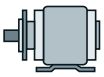	**J**	**P01**	–	–	✓	✓	✓	✓	–	–	–	–	–	–	–	–	–	Not for:	⑪, ⑭ 2, 4, 6-pole ≤ 200 hp; ⑫, ⑬ 8-pole ≤ 200 hp IEC IE3 ⑤	

For legends and footnotes, see page 3/115.

© Innomotics 2024

Innomotics GP and Innomotics SD standard motors

Cast-iron series Innomotics SD 1LE15 Basic Line, 1LE16 Performance Line

Types of construction	Article No. supplement		Frame size															Motor version		
			71	80	90	100	112	132	160	180	200	225	250	280	315 S/M	315 L 2-pole	315 L 4- to 8-pole			
	Type of construction code letter 14th position of the Article No.	For types of construction with order code(s) Article No. with additional identification code -Z				1LE1504 Basic Line												IEC	IE4	①
						1LE1604 Performance Line														②
			1LE1503 Basic Line																IE3	③
						1LE1603 Performance Line														④
						1LE1583														⑤
			1LE1501 Basic Line																IE2	⑥
						1LE1601 Performance Line														⑦
						1LE1502 Basic Line													IE1	⑧
				1LE1543 Basic Line														APAC Line	IE3	⑨
						1LE1643 Performance Line														⑩
										1LE1541 Basic Line									IE2	⑪
			1LE1523 Basic Line															Eagle Line	NPE (NEMA)	⑫
						1LE1623 Performance Line														⑬
1LE1 . . . - . . . . . - .	■ . . (-Z)	Order code				1LE1521 Basic Line													NEE (NEMA)	⑭
With flange next smallest	**EN 50347**		–	FF130	–	FF165	FF165	FF215	FF265	FF265	FF300	–	–	–	–	–	–			
	DIN 42948		–	A 160	–	A 200	A 200	A 250	A 300	A 300	A 350	–	–	–	–	–	–			
IM B5 2) 6) 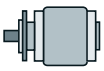	**F**	**P02**	–	✓	–	✓	✓	✓	✓	✓	✓	–	–	–	–	–	–			
IM V1 without protective cover 2)	**G**	**P02**	–	✓	–	✓	✓	✓	✓	✓	✓	–	–	–	–	–	–			
IM V1 with protective cover 2) 4) 5)	**G**	**P02+ H00**	–	✓	–	✓	✓	✓	✓	✓	✓	–	–	–	–	–	–			
IM V3 5)	**H**	**P02**	–	✓	–	✓	✓	✓	✓	✓	✓	–	–	–	–	–	–			
IM B35 3) 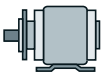	**J**	**P02**	–	✓	–	✓	✓	✓	✓	✓	✓	–	–	–	–	–	–	Not for:	⑪, ⑭ 2, 4, 6-pole ≤ 200 hp; ⑫, ⑬ 8-pole ≤ 200 hp	

For legends and footnotes, see page 3/115.

© Innomotics 2024

Innomotics GP and Innomotics SD standard motors

Cast-iron series Innomotics SD 1LE15 Basic Line, 1LE16 Performance Line

Types of construction	Article No. supplement: Type of construction code letter 14th position of the Article No.	Article No. supplement: For types of construction with order code(s) Article No. with additional identification code -Z	Frame size 71	80	90	100	112	132	160	180	200	225	250	280	315 S/M	315 L 2-pole	315 L 4- to 8-pole	Motor version		
						1LE1504 Basic Line												IEC	IE4	①
						1LE1604 Performance Line														②
			1LE1503 Basic Line																IE3	③
						1LE1603 Performance Line														④
						1LE1583														⑤
			1LE1501 Basic Line																IE2	⑥
						1LE1601 Performance Line														⑦
						1LE1502 Basic Line													IE1	⑧
				1LE1543 Basic Line														APAC Line	IE3	⑨
						1LE1643 Performance Line														⑩
										1LE1541 Basic Line									IE2	⑪
			1LE1523 Basic Line															Eagle Line	NPE (NEMA)	⑫
						1LE1623 Performance Line														⑬
1LE1 . . . - . . . . . - .	■ . . (-Z)	Order code				1LE1521 Basic Line													NEE (NEMA)	⑭
With flange	**EN 50347**		**FT85**	**FT100**	**FT115**	**FT130**	**FT130**	**FT165**	**FT215**	**–**	**–**	**–**	**–**	**–**	**–**	**–**	**–**			
	DIN 42948		**C 105**	**C 120**	**C 140**	**C 160**	**C 160**	**C 200**	**C 250**	**–**	**–**	**–**	**–**	**–**	**–**	**–**	**–**			
IM B14 2) 7)	**K**	**–**	✓	✓	✓	✓	✓	✓	✓	–	–	–	–	–	–	–	–			
IM V19 2)	**L**	**–**	✓	✓	✓	✓	✓	✓	✓	–	–	–	–	–	–	–	–			
IM V18 without protective cover 2) 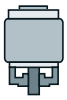	**M**	**–**	✓	✓	✓	✓	✓	✓	✓	–	–	–	–	–	–	–	–			
IM V18 with protective cover 2) 4) 5) 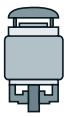	**M**	**H00**	✓	✓	✓	✓	✓	✓	✓	–	–	–	–	–	–	–	–			
IM B34 3)	**N**	**–**	✓	✓	✓	✓	✓	✓	✓	–	–	–	–	–	–	–	–	Not for:	⑪, ⑭ 2, 4, 6-pole ≤ 200 hp; ⑫, ⑬ 8-pole ≤ 200 hp	
With flange next largest	**EN 50347**		**FT115**	**FT130**	**FT130**	**FT165**	**FT165**	**FT215**	**–**	**–**	**–**	**–**	**–**	**–**	**–**	**–**	**–**			
	DIN 42948		**C 140**	**C 160**	**C 160**	**C 200**	**C 200**	**C 250**	**–**	**–**	**–**	**–**	**–**	**–**	**–**	**–**	**–**			
IM B14 2) 7) 8)	**K**	**P01**	✓	✓	✓	✓	✓	✓	–	–	–	–	–	–	–	–	–			
IM V19 2) 8)	**L**	**P01**	✓	✓	✓	✓	✓	✓	–	–	–	–	–	–	–	–	–			
IM V18 without protective cover 2) 8) 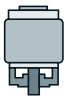	**M**	**P01**	✓	✓	✓	✓	✓	✓	–	–	–	–	–	–	–	–	–			
IM V18 with protective cover 2) 4) 5) 8) 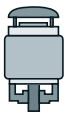	**M**	**P01+ H00**	✓	✓	✓	✓	✓	✓	–	–	–	–	–	–	–	–	–			
IM B34 3) 8)	**N**	**P01**	✓	✓	✓	✓	✓	✓	–	–	–	–	–	–	–	–	–	Not for:	⑪, ⑭ 2, 4, 6-pole ≤ 200 hp; ⑫, ⑬ 8-pole ≤ 200 hp	

For legends and footnotes, see page 3/115.

© Innomotics 2024

Innomotics GP and Innomotics SD standard motors

Cast-iron series Innomotics SD 1LE15 Basic Line, 1LE16 Performance Line

Types of construction	Article No. supplement		Frame size 71	80	90	100	112	132	160	180	200	225	250	280	315 S/M	315 L 2-pole	315 L 4- to 8-pole	Motor version		
	Type of construction code letter 14th position of the Article No.	For types of construction with order code(s) Article No. with additional identification code **-Z**				1LE1504 Basic Line												IEC	IE4	①
						1LE1604 Performance Line														②
			1LE1503 Basic Line																IE3	③
						1LE1603 Performance Line														④
						1LE1583														⑤
			1LE1501 Basic Line																IE2	⑥
						1LE1601 Performance Line														⑦
						1LE1502 Basic Line													IE1	⑧
				1LE1543 Basic Line														APAC Line	IE3	⑨
						1LE1643 Performance Line														⑩
										1LE1541 Basic Line									IE2	⑪
			1LE1523 Basic Line															Eagle Line	NPE (NEMA)	⑫
						1LE1623 Performance Line														⑬
1LE1 . . . - . . . . . - .	**■ . . (-Z)**	Order code				1LE1521 Basic Line													NEE (NEMA)	⑭
With flange next smallest	**EN 50347**		–	–	–	FT115	–	–	–	–	–	–	–	–	–	–	–			
	DIN 42948		–	–	–	C 140	–	–	–	–	–	–	–	–	–	–	–			
IM B14 2) 7)	**K**	**P02**	–	–	–	✓	–	–	–	–	–	–	–	–	–	–	–	Not for:	IEC IE3 ⑤	
IM V19 2)	**L**	**P02**	–	–	–	✓	–	–	–	–	–	–	–	–	–	–	–	Not for:	IEC IE3 ⑤	
IM V18 without protective cover 2)	**M**	**P02**	–	–	–	✓	–	–	–	–	–	–	–	–	–	–	–	Not for:	IEC IE3 ⑤	
IM V18 with protective cover 2) 4) 5) 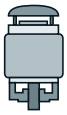	**M**	**P02+ H00**	–	–	–	✓	–	–	–	–	–	–	–	–	–	–	–	Not for:	IEC IE3 ⑤	
IM B34 3)	**N**	**P02**	–	–	–	✓	–	–	–	–	–	–	–	–	–	–	–	Not for:	IEC IE3 ⑤	

☐ Standard version
✓ With additional charge
O. R. Possible on request
– Not possible

3

1) The types of construction IM B6/7/8, IM V6 and IM V5 with/without protective cover are also possible as long as no stamping of these types of construction on the rating plate is required. As standard the type of construction IM B3 is then stamped on the rating plate. With type of construction IM V5 with protective cover, the protective cover has to be additionally ordered with order code **H00**. The protective cover is not stamped on the rating plate.

2) The type of construction is stamped on the rating plate. If mounted in a different position, the position must be specified to ensure that the condensation drainage holes are positioned correctly.

3) For North America export version Eagle Line 1LE1521 NEMA Energy Efficient, types of construction with feet are not possible for 2-pole, 4-pole and 6-pole motors ≤ 200 hp in accordance with NEMA MG1 Table 12-11.

4) In combination with an encoder, it is not necessary to order the protective cover (order code **H00**), as this is delivered as a protection for the encoder as standard. In this case the protective cover is standard design (without additional charge).

5) The "Standard cylindrical shaft extension (second shaft extension)" option (order code **L05**) is not possible.

6) The types of construction IM V3 and IM V1 with/without protective cover are also possible as long as no stamping of these types of construction on the rating plate is required. As standard the type of construction IM B5 is then stamped on the rating plate. With type of construction IM V1 with protective cover, the protective cover has to be additionally ordered with order code **H00**. The protective cover is not stamped on the rating plate.

7) The types of construction IM V19 and IM V18 with/without protective cover are also possible as long as no stamping of these types of construction on the rating plate is required. As standard the type of construction IM B14 is then stamped on the rating plate. With type of construction IM V18 with protective cover, the protective cover has to be additionally ordered with order code **H00**. The protective cover is not stamped on the rating plate.

8) With reference to standard EN 50347, flanges that are 2 levels larger are used with option **P01** in the frame sizes 71 and 80.

9) When ordering frame size B7 and the required cable outlet below, option **R12** must also be ordered.

© Innomotics 2024

Innomotics GP and Innomotics SD standard motors

Aluminum series Innomotics GP 1LE1073 and cast-iron series Innomotics SD 1LE1573, 1LE5773

Selection and ordering data

Types of construction	Article No. supplement: Type of construction code letter 14th position of the Article No.	Article No. supplement: For types of construction with order code(s) Article No. with additional identification code -Z	Frame size 80	90	100	112	132	160	180	200	225	250	280	315	Motor version IEC	IE3
			1LE1073													
									1LE1573							
													1LE5773			
1LE . . . . - . . . . . - .	■ . . (-Z)	Order code														
Without flange																
IM B3 [1) 2)]	A	–	☐	☐	☐	☐	☐	☐	☐	☐	☐	☐	☐	☐		
IM B6 [2)] 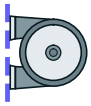	T	–	☐	☐	☐	☐	☐	☐	☐	☐	☐	☐	☐	☐		
IM B7 [2) 8)] 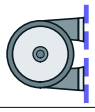	U	–	☐	☐	☐	☐	☐	☐	☐	☐	☐	☐	☐	☐		
IM B8 [2)]	V	–	☐	☐	☐	☐	☐	☐	☐	☐	☐	☐	☐	☐		
IM V6 [2)] 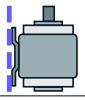	D	–	☐	☐	☐	☐	☐	☐	☐	☐	☐	☐	☐	☐		
IM V5 without protective cover [2)]	C	–	☐	☐	☐	☐	☐	☐	☐	☐	☐	☐	☐	☐		
IM V5 with protective cover [2) 3) 4) 5)] 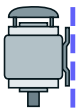	C	H00	✓	✓	✓	✓	✓	✓	✓	✓	✓	✓	✓	✓		
With flange	EN 50347 DIN 42948		FF165 A 200	FF165 A 200	FF215 A 250	FF215 A 250	FF265 A 300	FF300 A 350	FF300 A 350	FF350 A 400	FF400 A 450	FF500 A 550	FF500 A 550	FF600 A 660		
IM B5 [2) 6)] 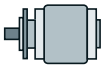	F	–	✓	✓	✓	✓	✓	✓	✓	✓	✓	✓	✓	✓		
IM V1 without protective cover [2)]	G	–	✓	✓	✓	✓	✓	✓	✓	✓	✓	✓	✓	✓		
IM V1 with protective cover [2) 3) 4) 5)]	G	H00	–	–	✓	✓	✓	✓	✓	✓	✓	✓	✓	✓		
IM V3 [3)]	H	–	✓	✓	✓	✓	✓	✓	✓	✓	✓	✓	✓	✓		
IM B35 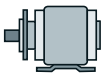	J	–	✓	✓	✓	✓	✓	✓	✓	✓	✓	✓	✓	✓		

For legends and footnotes, see page 3/119.

© Innomotics 2024

Innomotics GP and Innomotics SD standard motors

Aluminum series Innomotics GP 1LE1073 and cast-iron series Innomotics SD 1LE1573, 1LE5773

Types of construction	Article No. supplement: Type of construction code letter 14th position of the Article No.	Article No. supplement: For types of construction with order code(s) Article No. with additional identification code -Z	Frame size 80	90	100	112	132	160	180	200	225	250	280	315	Motor version IEC	IE3
			1LE1073													
									1LE1573							
													1LE5773			
1LE . . . . - . . . . . - .	■ . . (-Z)	Order code														
With flange next largest	**EN 50347**		–	FF215	FF265	FF265	FF300	–	–	–	–	–	–	–		
	DIN 42948		–	A 250	A 300	A 300	A 350	–	–	–	–	–	–	–		
IM B5 2) 6) 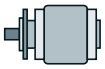	**F**	**P01**	–	✓	✓	✓	✓	–	–	–	–	–	–	–		
IM V1 without protective cover 2)	**G**	**P01**	–	✓	✓	✓	✓	–	–	–	–	–	–	–		
IM V1 with protective cover 2) 3) 4) 5)	**G**	**P01+H00**	–	✓	✓	✓	✓	–	–	–	–	–	–	–		
IM V3 3)	**H**	**P01**	–	✓	✓	✓	✓	–	–	–	–	–	–	–		
IM B35 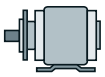	**J**	**P01**	–	✓	✓	✓	✓	–	–	–	–	–	–	–		
With flange next smallest	**EN 50347**		FF130	–	FF165	FF165	FF215	FF265	FF265	FF300	–	–	–	–		
	DIN 42948		A 160	–	A 200	A 200	A 250	A 300	A 300	A 350	–	–	–	–		
IM B5 2) 6) 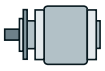	**F**	**P02**	✓	–	✓	✓	✓	✓	✓	✓	–	–	–	–		
IM V1 without protective cover 2)	**G**	**P02**	✓	–	✓	✓	✓	✓	✓	✓	–	–	–	–		
IM V1 with protective cover 2) 3) 4) 5)	**G**	**P02+H00**	✓	–	✓	✓	✓	✓	✓	✓	–	–	–	–		
IM V3 3)	**H**	**P02**	✓	–	✓	✓	✓	✓	✓	✓	–	–	–	–		
IM B35 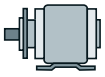	**J**	**P02**	✓	–	✓	✓	✓	✓	✓	✓	–	–	–	–		

For legends and footnotes, see page 3/119.

© Innomotics 2024

Innomotics GP and Innomotics SD standard motors

Aluminum series Innomotics GP 1LE1073 and cast-iron series Innomotics SD 1LE1573, 1LE5773

Types of construction	Article No. supplement: Type of construction code letter 14th position of the Article No.	Article No. supplement: For types of construction with order code(s) Article No. with additional identification code -Z	Frame size 80	90	100	112	132	160	180	200	225	250	280	315	Motor version
			1LE1073												IEC IE3
									1LE1573						
													1LE5773		
1LE . . . . - . . . . . - .	■ . . (-Z)	Order code													
With flange	**EN 50347**		FT100	FT115	FT130	FT130	FT165	FT215	–	–	–	–	–	–	
	DIN 42948		C 120	C 140	C 160	C 160	C 200	C 250	–	–	–	–	–	–	
IM B14 2) 7)	**K**	**–**	✓	✓	✓	✓	✓	✓	–	–	–	–	–	–	
IM V19 2) 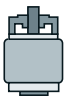	**L**	**–**	✓	✓	✓	✓	✓	✓	–	–	–	–	–	–	
IM V18 without protective cover 2) 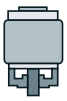	**M**	**–**	✓	✓	✓	✓	✓	✓	–	–	–	–	–	–	
IM V18 with protective cover 2) 3) 4) 5) 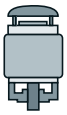	**M**	**H00**	✓	✓	✓	✓	✓	✓	–	–	–	–	–	–	
IM B34	**N**	**–**	✓	✓	✓	✓	✓	✓	–	–	–	–	–	–	
With flange next largest 9)	**EN 50347**		FT130	FT130	FT165	FT165	FT215	–	–	–	–	–	–	–	
	DIN 42948		C 160	C 160	C 200	C 200	C 250	–	–	–	–	–	–	–	
IM B14 2) 7)	**K**	**P01**	✓	✓	✓	✓	✓	–	–	–	–	–	–	–	
IM V19 2) 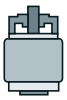	**L**	**P01**	✓	✓	✓	✓	✓	–	–	–	–	–	–	–	
IM V18 without protective cover 2) 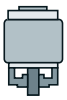	**M**	**P01**	✓	✓	✓	✓	✓	–	–	–	–	–	–	–	
IM V18 with protective cover 2) 3) 4) 5) 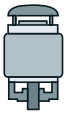	**M**	**P01+H00**	✓	✓	✓	✓	✓	–	–	–	–	–	–	–	
IM B34	**N**	**P01**	✓	✓	✓	✓	✓	–	–	–	–	–	–	–	

For legends and footnotes, see page 3/119.

© Innomotics 2024

Innomotics GP and Innomotics SD standard motors

Aluminum series Innomotics GP 1LE1073 and cast-iron series Innomotics SD 1LE1573, 1LE5773

Types of construction	Article No. supplement: Type of construction code letter 14th position of the Article No.	Article No. supplement: For types of construction with order code(s) Article No. with additional identification code **-Z**	Frame size 80	90	100	112	132	160	180	200	225	250	280	315	Motor version	
			1LE1073												IEC	IE3
									1LE1573							
													1LE5773			
1LE . . . . - . . . . . - .	■ **. . (-Z)**	Order code														
With flange next smallest	**EN 50347**		–	–	FT115	FT115	FT130	FT165	–	–	–	–				
	DIN 42948		–	–	C 140	C 140	C 160	C 200	–	–	–	–				
IM B14 [2) 7)]	**K**	**P02**	–	–	✓	O. R.	O. R.	O. R.	–	–	–	–	–	–		
IM V19 [2)]	**L**	**P02**	–	–	✓	O. R.	O. R.	O. R.	–	–	–	–	–	–		
IM V18 without protective cover [2)]	**M**	**P02**	–	–	✓	O. R.	O. R.	O. R.	–	–	–	–	–	–		
IM V18 with protective cover [2) 3) 4) 5)] 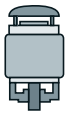	**M**	**P02+H00**	–	–	✓	O. R.	O. R.	O. R.	–	–	–	–	–	–		
IM B34	**N**	**P02**	–	–	✓	O. R.	O. R.	O. R.	–	–	–	–	–	–		

☐ Standard version
✓ With additional charge
– Not possible
O. R. Possible on request

3

1) The types of construction IM B6/7/8, IM V6 and IM V5 with/without protective cover are also possible as long as there are no condensation drainage holes (order code **H03**) and these types of construction do not have to be stamped on the rating plate. As standard the type of construction IM B3 is then stamped on the rating plate. With type of construction IM V5 with protective cover, the protective cover has to be additionally ordered with order code **H00**. The protective cover is not stamped on the rating plate.

2) The type of construction is stamped on the rating plate. For orders with condensation drainage holes (order code **H03**), if mounted in a different position, the position must be specified to ensure that the condensation drainage holes are positioned correctly.

3) The "Standard cylindrical shaft extension (second shaft extension)" option (order code **L05**) is not possible.

4) In combination with an encoder, it is not necessary to order the protective cover (order code **H00**), as this is delivered as a protection for the encoder as standard. In this case the protective cover is standard version (without additional charge).

5) Not possible for forced-air cooled 1LE1 motors with order code **F90** without external fan and fan cover.

6) The types of construction IM V3 and IM V1 with/without protective cover are also possible as long as there are no condensation drainage holes (order code **H03**) and these types of construction do not have to be stamped on the rating plate. As standard the type of construction IM B5 is then stamped on the rating plate. With type of construction IM V1 with protective cover, the protective cover has to be additionally ordered with order code **H00**. The protective cover is not stamped on the rating plate.

7) The types of construction IM V19 and IM V18 with/without protective cover are also possible as long as there are no condensation drainage holes (order code **H03**) and these types of construction do not have to be stamped on the rating plate. As standard the type of construction IM B14 is then stamped on the rating plate. With type of construction IM V18 with protective cover, the protective cover has to be additionally ordered with order code **H00**. The protective cover is not stamped on the rating plate.

8) When ordering frame size B7 and the required cable outlet below, option **R12** must also be ordered.

9) For the standard EN 50347, flanges which are 2 levels larger are used in frame size 80 with option **P01**.

© Innomotics 2024

Innomotics GP and Innomotics SD standard motors

Aluminum series Innomotics GP 1LE10

Selection and ordering data

Motor protection	Article No. supplement: Motor protection code letter 15th position of the Article No.	Article No. supplement: Additional identification code with order code and plain text if required	Frame size 63	71	80	90	100	112	132	160	180	200	Motor version		
							1LE1004						IEC	IE4	①
			1LE1003											IE3	②
							1LE1083								③
			1LE1001											IE2	④
			1LE1002											IE1	⑤
			1LE1043										APAC Line	IE3	⑥
					1LE1041									IE2	⑦
			1LE1023										Eagle Line	NPE (NEMA)	⑧
						1LE1021								NEE (NEMA)	⑨
							1LE1011						Pole-changing		⑩
1LE10 . . - . . . . . - . .	■ .	Order code					1LE1012								⑪
Motor protection															
None (standard)	**A**	–	☐	☐	☐	☐	☐	☐	☐	☐	☐	☐			
1 or 3 PTC thermistors – for tripping (2 terminals) [1]	**B**	–	✓	✓	✓	✓	✓	✓	✓	✓	✓	✓			
2 or 6 PTC thermistors – for alarm and tripping (4 terminals) [1]	**C**	–	✓	✓	✓	✓	✓	✓	✓	✓	✓	✓			
3 Pt100 resistance thermometers (6 terminals) [1]	**H**	–	–	–	–	–	✓	✓	✓	✓	✓	✓			
6 Pt100 resistance thermometers (12 terminals)	**J**		–	–	–	–	✓	✓	✓	✓	✓	✓	Only for:	IEC IE3 ③	
1 Pt1000 resistance thermometer (2 terminals)	**K**	–	✓	✓	✓	✓	✓	✓	✓	✓	✓	✓			
2 Pt1000 resistance thermometers (4 terminals)	**L**	–	✓	✓	✓	✓	✓	✓	✓	✓	✓	✓			
1 Pt100 resistance thermometer (2 terminals)	**P**	–	–	–	–	–	✓	✓	✓	✓	✓	✓			
3 Pt100 resistance thermometers – (9 terminals)	**Q**	–	–	–	–	–	✓	✓	✓	✓	✓	✓			
6 Pt100 resistance thermometers – (18 terminals)	**R**	–	–	–	–	–	✓	✓	✓	✓	✓	✓			
3 NTC thermistors – for tripping (6 terminals) [1]	**Z**	**Q2A**	–	–	–	–	✓	✓	✓	✓	–	–			
3 bimetal sensors (NC contacts) – for tripping (2 terminals) [1]	**Z**	**Q3A**	✓	✓	✓	✓	✓	✓	✓	✓	✓	✓			

☐ Standard version
✓ With additional charge
– Not possible

[1] Evaluation with appropriate tripping unit (see Catalog IC 10) is recommended. For pole-changing motors with two separate windings, double the number of temperature sensors or temperature detectors is required. This also results in a double additional charge.

© Innomotics 2024

Selection and ordering data

Motor protection	Article No. supplement: Motor protection code letter 15th position of the Article No.	Article No. supplement: Additional identification code with order code and plain text if required	Frame size 71	80	90	100	112	132	160	180	200	225	250	280	315	Motor version		
						1LE1504 Basic Line										IEC	IE4	①
						1LE1604 Performance Line												②
			1LE1503 Basic Line														IE3	③
						1LE1603 Performance Line												④
						1LE1583												⑤
			1LE1501 Basic Line														IE2	⑥
						1LE1601 Performance Line												⑦
						1LE1502 Basic Line											IE1	⑧
				1LE1543 Basic Line												APAC Line	IE3	⑨
						1LE1643 Performance Line												⑩
										1LE1541 Basic Line							IE2	⑪
			1LE1523 Basic Line													Eagle Line	NPE (NEMA)	⑫
						1LE1623 Performance Line												⑬
1LE1 . . . - . . . . . - . .	■ .	Order code				1LE1521 Basic Line											NEE (NEMA)	⑭
Motor protection																		
Without (standard) [1]	**A**	**–**	☐	☐	☐	☐	☐	☐	☐	☐	☐	☐	☐	☐	☐	Only for:	Basic Line ①, ③, ⑥, ⑧, ⑨, ⑪, ⑫, ⑭	
1 or 3 PTC thermistors – for tripping (2 terminals) [1] [2]	**B**	**–**	✓	✓	✓	✓	✓	✓	✓	✓	✓	✓	✓	✓	✓	Only for:	Basic Line ①, ③, ⑥, ⑧, ⑨, ⑪, ⑫, ⑭	
			☐	☐	☐	☐	☐	☐	☐	☐	☐	☐	☐	☐	☐	Only for:	Performance Line ②, ④, ⑦, ⑩, ⑬	
2 or 6 PTC thermistors – for alarm and tripping (4 terminals) [2]	**C**	**–**	✓	✓	✓	✓	✓	✓	✓	✓	✓	✓	✓	✓	✓			
3 Pt100 resistance thermometers (6 terminals)	**H**	**–**	✓	✓	✓	✓	✓	✓	✓	✓	✓	✓	✓	✓	✓			
6 Pt100 resistance thermometers (12 terminals)	**J**	**–**	–	–	–	–	–	–	–	✓	✓	✓	✓	✓	✓			
1 Pt1000 resistance thermometers (2 terminals)	**K**	**–**	✓	✓	✓	✓	✓	✓	✓	✓	✓	✓	✓	✓	✓			
2 Pt1000 resistance thermometers (4 terminals)	**L**	**–**	✓	✓	✓	✓	✓	✓	✓	✓	✓	✓	✓	✓	✓			
1 Pt100 resistance thermometer (2 terminals)	**P**	**–**	–	–	–	✓	✓	✓	✓	✓	✓	✓	✓	✓	✓			
3 Pt100 resistance thermometers – (9 terminals)	**Q**	**–**	–	–	–	✓	✓	✓	✓	✓	✓	✓	✓	✓	✓			
6 Pt100 resistance thermometers – (18 terminals)	**R**	**–**	–	–	–	✓	✓	✓	✓	✓	✓	✓	✓	✓	✓			
3 NTC thermistors – for tripping (6 terminals)	**Z**	**Q2A**	✓	✓	✓	✓	✓	✓	✓	–	–	–	–	–	–			
3 bimetal sensors (NC contacts) – for tripping (2 terminals) [2]	**Z**	**Q3A**	✓	✓	✓	✓	✓	✓	✓	✓	✓	✓	✓	✓	✓			
6 bimetal sensors (NC contacts) for alarm and tripping (4 terminals) [2]	**Z**	**Q9A**	–	–	–	✓	✓	✓	✓	✓	✓	✓	✓	✓	✓			

☐ Standard version
✓ With additional charge
– Not possible

Note:
Options are available specifically for bearing protection – for order codes and descriptions, see from page 3/132.

[1] For the Performance Line, motor protection by means of PTC thermistors with 3 built-in temperature sensors for tripping (motor protection code letter B) is already included in the basic price. For the Performance Line, the option "Without motor protection" (motor protection code letter A) is not possible.

[2] Evaluation with appropriate tripping unit (see Catalog IC 10) is recommended.

© Innomotics 2024

Innomotics GP and Innomotics SD standard motors

Aluminum series Innomotics GP 1LE1073 and cast-iron series Innomotics SD 1LE1573, 1LE5773

Selection and ordering data

Motor protection	Article No. supplement: Motor protection code letter 15th position of the Article No.	Article No. supplement: Additional identification code with order code and plain text if required	Frame size 80	90	100	112	132	160	180	200	225	250	280	315	Motor version IEC	IE3
			1LE1073													
									1LE1573							
												1LE5773				
1LE . . . . - . . . . . - . .	■ .	Order code														
Motor protection																
None (standard)	**A**	–	☐	☐	☐	☐	☐	☐	☐	☐	☐	☐	☐	☐		
1 or 3 PTC thermistors – for tripping (2 terminals) [1]	**B**	–	✓	✓	✓	✓	✓	✓	✓	✓	✓	✓	✓	✓		
2 or 6 PTC thermistors – for alarm and tripping (4 terminals) [1]	**C**	–	✓	✓	✓	✓	✓	✓	✓	✓	✓	✓	✓	✓		
3 Pt100 resistance thermometers (6 terminals)	**H**	–	–	–	✓	✓	✓	✓	✓	✓	✓	✓	✓	✓		
6 Pt100 resistance thermometers (12 terminals)	**J**	–	–	–	–	–	–	–	✓	✓	✓	✓	✓	✓		
1 Pt1000 resistance thermometer (2 terminals)	**K**	–	✓	✓	✓	✓	✓	✓	✓	✓	✓	✓	✓	✓		
2 Pt1000 resistance thermometers (4 terminals)	**L**	–	✓	✓	✓	✓	✓	✓	✓	✓	✓	✓	✓	✓		
1 Pt100 resistance thermometer (2 terminals)	**P**	–	–	–	✓	✓	✓	✓	✓	✓	✓	✓	✓	✓		
3 Pt100 resistance thermometers – (9 terminals)	**Q**	–	–	–	✓	✓	✓	✓	✓	✓	✓	✓	✓	✓		
6 Pt100 resistance thermometers – (18 terminals)	**R**	–	–	–	✓	✓	✓	✓	✓	✓	✓	✓	✓	✓		
3 NTC thermistors – for tripping (6 terminals)	**Z**	**Q2A**	–	–	✓	✓	✓	✓	–	–	–	–	–	–		
3 bimetal sensors (NC contacts) – for tripping (2 terminals) [1]	**Z**	**Q3A**	✓	✓	✓	✓	✓	✓	✓	✓	✓	✓	✓	✓		
6 bimetal sensors (NC contacts) for alarm and tripping (4 terminals) [1]	**Z**	**Q9A**	–	–	✓	✓	✓	✓	✓	✓	✓	✓	✓	✓		

☐ Standard version
✓ With additional charge
– Not possible

Note:
Options are available specifically for bearing protection – for order codes and descriptions, see from page 3/132.

[1] Evaluation with appropriate tripping unit (see Catalog IC 10) is recommended.

© Innomotics 2024

Selection and ordering data

Terminal box position

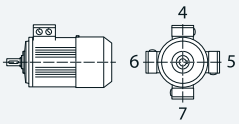

1LE10 . . - . . . . . - . . . ■

Frame size	63	71	80	90	100	112	132	160	180	200	Motor version		
					1LE1004						IEC	IE4	①
	1LE1003											IE3	②
					1LE1083								③
	1LE1001											IE2	④
	1LE1002											IE1	⑤
	1LE1043										APAC Line	IE3	⑥
			1LE1041									IE2	⑦
	1LE1023										Eagle Line	NPE (NEMA)	⑧
				1LE1021								NEE (NEMA)	⑨
					1LE1011						Pole-changing		⑩
					1LE1012								⑪

Terminal box position	Article No. supplement: Terminal box position code 16th position of the Article No.	Additional identification code with order code and plain text if required	63	71	80	90	100	112	132	160	180	200
Terminal box top [1]	**4**	–	☐	☐	☐	☐	☐	☐	☐	☐	☐	☐
Terminal box right-hand side [2]	**5**	–	–	–	✓	✓	✓	✓	✓	✓	✓	✓
Terminal box left-hand side [2]	**6**	–	–	–	✓	✓	✓	✓	✓	✓	✓	✓
Terminal box at bottom [2] [3]	**7**	–	–	–	–	–	✓	✓	✓	✓	–	–

☐ Standard version
✓ With additional charge
– Not possible

3

[1] For types of construction with feet up to and including frame size 160, cast feet are standard. Screwed-on feet are available with order code **H01**. Frame sizes 180 and 200 are fitted as standard with screwed-on feet.

[2] For types of construction with feet, screwed-on feet are standard.

[3] Not generally possible for motors with feet.

© Innomotics 2024

Innomotics GP and Innomotics SD standard motors

Cast-iron series Innomotics SD 1LE15 Basic Line, 1LE16 Performance Line

Selection and ordering data

Terminal box position	Article No. supplement: Terminal box position code 16th position of the Article No.	Article No. supplement: Additional identification code with order code and plain text if required	Frame size 71	80	90	100	112	132	160	180	200	225	250	280	315	Motor version		
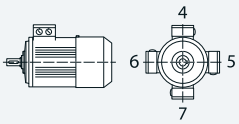						1LE1504 Basic Line										IEC	IE4	①
						1LE1604 Performance Line												②
			1LE1503 Basic Line														IE3	③
						1LE1603 Performance Line												④
						1LE1583												⑤
			1LE1501 Basic Line														IE2	⑥
						1LE1601 Performance Line												⑦
						1LE1502 Basic Line											IE1	⑧
				1LE1543 Basic Line												APAC Line	IE3	⑨
						1LE1643 Performance Line												⑩
										1LE1541 Basic Line							IE2	⑪
			1LE1523 Basic Line													Eagle Line	NPE (NEMA)	⑫
						1LE1623 Performance Line												⑬
1LE1 . . . - . . . . . - . . . ■		Order code				1LE1521 Basic Line											NEE (NEMA)	⑭
Terminal box position																		
Terminal box top [1]	**4**	–	☐	☐	☐	☐	☐	☐	☐	☐	☐	☐	☐	☐	☐			
Terminal box right-hand side [2]	**5**	–	–	✓	✓	✓	✓	✓	✓	✓	✓	✓	✓	✓	✓			
Terminal box left-hand side [2]	**6**	–	–	✓	✓	✓	✓	✓	✓	✓	✓	✓	✓	✓	✓			
Terminal box bottom [3]	**7**	–	–	–	–	✓	✓	✓	✓	–	–	–	–	–	–			

☐ Standard version
✓ With additional charge
– Not possible

1) For types of construction with feet and flange-mounted with feet, cast feet are standard. Screwed-on feet are available with order code **H01**.

2) For types of construction with feet and flange-mounted with feet, screwed-on feet are standard. Except for frame sizes 225, 250, 280 and 315: in which case for types of construction with feet and flange-mounted with feet, cast feet are standard. Screwed-on feet are available with order code **H01**.

3) Not generally possible for motors with feet.

© Innomotics 2024

Innomotics GP and Innomotics SD standard motors

Aluminum series Innomotics GP 1LE1073 and cast-iron series Innomotics SD 1LE1573, 1LE5773

Selection and ordering data

Terminal box position	Article No. supplement: Terminal box position code 16th position of the Article No.	Article No. supplement: Additional identification code with order code and plain text if required	Frame size 80	90	100	112	132	160	180	200	225	250	280	315	Motor version IEC	IE3
			1LE1073													
									1LE1573							
												1LE5773				
1LE . . . . - . . . . . - . . . ■		Order code														
Terminal box position																
Terminal box base left with terminal box at the top	**0**	**–**	–	–	–	–	–	–	–	–	–	–	–	✓		
Terminal box base right with terminal box at the top	**1**	**–**	–	–	–	–	–	–	–	–	–	–	–	✓		
Terminal box base left with oblique terminal box 45°	**2**	**–**	–	–	–	–	–	–	–	–	–	–	–	○		
Terminal box base right with oblique terminal box 45°	**3**	**–**	–	–	–	–	–	–	–	–	–	–	–	□		
Terminal box at top	**4**	**–**	□	□	□	□	□	□	□	□	□	□	□	–		
Terminal box on right-hand side	**5**	**–**	✓	✓	✓	✓	✓	✓	✓	✓	✓	✓	✓	✓		
Terminal box on left-hand side	**6**	**–**	✓	✓	✓	✓	✓	✓	✓	✓	✓	✓	✓	✓		
Terminal box bottom [1]	**7**	**–**	–	–	✓	✓	✓	✓	–	–	–	–	–	–		
Terminal box left-hand side (base below) [1]	**9**	**R5L**	–	–	–	–	–	–	–	–	–	–	–	✓		
Terminal box right-hand side (base below) [1]	**9**	**R6R**	–	–	–	–	–	–	–	–	–	–	–	✓		
Terminal box bottom left [1]	**9**	**R7L**	–	–	–	–	–	–	–	–	–	–	–	✓		
Terminal box bottom right [1]	**9**	**R7R**	–	–	–	–	–	–	–	–	–	–	–	✓		

□ Standard version
○ Without additional charge
✓ With additional charge
– Not possible

[1] Not generally possible for motors with feet.

© Innomotics 2024

Innomotics GP and Innomotics SD standard motors

Aluminum series Innomotics GP 1LE10

Selection and ordering data

Special versions	Additional identification code -Z with order code and plain text if required	Frame size 63	71	80	90	100	112	132	160	180	200	Motor version		
						1LE1004						IEC	IE4	①
		1LE1003											IE3	②
						1LE1083								③
		1LE1001											IE2	④
		1LE1002											IE1	⑤
		1LE1043										APAC Line	IE3	⑥
				1LE1041									IE2	⑦
		1LE1023										Eagle Line	NPE (NEMA)	⑧
					1LE1021								NEE (NEMA)	⑨
						1LE1011						Pole-changing		⑩
1LE10 . . - . . . . . - . . . . -Z	Order code					1LE1012								⑪
Motor protection														
1 or 3 PTC thermistors – for tripping (2 terminals)	**Q11**	✓	✓	✓	✓	✓	✓	✓	✓	✓	✓			
2 or 6 PTC thermistors – for alarm and tripping (4 terminals)	**Q12**	✓	✓	✓	✓	✓	✓	✓	✓	✓	✓			
3 bimetal sensors (NC contacts) for tripping (2 terminals)	**Q31**	–	–	✓	✓	✓	✓	✓	✓	✓	✓			
6 bimetal sensors (NC contacts) for alarm and tripping (4 terminals)	**Q32**	–	–	✓	✓	✓	✓	✓	✓	✓	✓			
3 bimetal sensors (NC contacts) for tripping (6 terminals)	**Q33**	–	–	–	–	–	–	–	–	✓	✓			
6 bimetal sensors (NC contacts) for alarm and tripping (12 terminals)	**Q34**	–	–	–	–	–	–	–	–	✓	✓			
1 Pt1000 resistance thermometer (2 terminals)	**Q35**	✓	✓	✓	✓	✓	✓	✓	✓	✓	✓			
2 Pt1000 resistance thermometers (4 terminals)	**Q36**	✓	✓	✓	✓	✓	✓	✓	✓	✓	✓			
3 Pt100 resistance thermometers (6 terminals)	**Q60**	–	–	–	–	✓	✓	✓	✓	✓	✓			
6 Pt100 resistance thermometers 12 terminals)	**Q61**	–	–	–	–	✓	✓	✓	✓	✓	✓			
1 Pt100 resistance thermometer (2 terminals)	**Q62**	–	–	–	–	✓	✓	✓	✓	✓	✓			
3 Pt100 resistance thermometers (9 terminals)	**Q63**	–	–	–	–	✓	✓	✓	✓	✓	✓			
6 Pt100 resistance thermometers (18 terminals)	**Q64**	–	–	–	–	✓	✓	✓	✓	✓	✓			
2 Pt100 resistance thermometers in basic configuration for bearings (4 terminals)	**Q72**	–	–	–	–	O. R.	O. R.	O. R.	O. R.	✓	✓			
2 Pt100 resistance thermometers for bearing (6 terminals)	**Q78**	–	–	–	–	O. R.	O. R.	O. R.	O. R.	✓	✓			
2 Pt100 double resistance thermometers for bearing (12 terminals)	**Q79**	–	–	–	–	O. R.	O. R.	O. R.	O. R.	✓	✓			
Motor connection and terminal box														
External grounding	**H04**	✓	✓	✓	✓	✓	✓	✓	✓	✓	✓			
Terminal box on NDE	**H08**	✓	✓	✓	✓	✓	✓	✓	✓	✓	✓			
Connected in star for dispatch	**M01**	✓	✓	✓	✓	✓	✓	✓	✓	✓	✓			
Connected in delta for dispatch	**M02**	✓	✓	✓	✓	✓	✓	✓	✓	✓	✓			
Rotation of the terminal box through 90°, entry from DE	**R10**	O	O	O	O	O	O	O	O	✓	✓			
Rotation of the terminal box through 90°, entry from NDE	**R11**	O	O	O	O	O	O	O	O	✓	✓			
Rotation of the terminal box through 180°	**R12**	O	O	O	O	O	O	O	O	✓	✓			
Terminal box in position 0°, connection from right	**R13**	O	O	O	O	O	O	O	–	–	–			
One metal cable gland	**R15**	✓	✓	✓	✓	✓	✓	✓	✓	✓	✓			
Metal cable gland, maximum configuration	**R18**	✓	✓	✓	✓	✓	✓	✓	✓	✓	✓			
3 cables protruding, 0.5 m long	**R20**	✓	✓	✓	✓	✓	✓	✓	✓	–	–	Not for:	⑩, ⑪	
3 cables protruding, 1.5 m long	**R21**	✓	✓	✓	✓	✓	✓	✓	✓	O. R.	O. R.	Not for:	⑩, ⑪	
6 cables protruding, 0.5 m long	**R22**	✓	✓	✓	✓	✓	✓	✓	✓	O. R.	O. R.			
6 cables protruding, 1.5 m long	**R23**	✓	✓	✓	✓	✓	✓	✓	✓	O. R.	O. R.			
6 cables protruding, 3 m long	**R24**	✓	✓	✓	✓	✓	✓	✓	✓	O. R.	O. R.			

For legends, see page 3/131.

© Innomotics 2024

Innomotics GP and Innomotics SD standard motors

Aluminum series Innomotics GP 1LE10

Special versions	Additional identification code -Z with order code and plain text if required	Frame size 63	71	80	90	100	112	132	160	180	200	Motor version		
						1LE1004						IEC	IE4	①
		1LE1003											IE3	②
						1LE1083								③
		1LE1001											IE2	④
		1LE1002											IE1	⑤
		1LE1043										APAC Line	IE3	⑥
				1LE1041									IE2	⑦
		1LE1023										Eagle Line	NPE (NEMA)	⑧
					1LE1021								NEE (NEMA)	⑨
						1LE1011						Pole-changing		⑩
1LE10 . . - . . . . . - . . . . -Z	Order code					1LE1012								⑪
Motor connection and terminal box (continued)														
Reduction piece for M cable gland in accordance with British Standard, mounted on both cable entries	**R30**	–	–	–	–	✓	✓	✓	✓	–	–			
Larger terminal box	**R50**	✓	✓	✓	✓	✓	✓	✓	✓	✓	✓	Not for:	⑧, ⑨ < frame size 100	
	–	–	–	☐	☐	☐	☐	☐	☐	☐	☐	Only for:	⑧, ⑨ < frame size 100	
Auxiliary terminal box, aluminum	**R60**	–	–	–	–	–	–	–	–	✓	✓			
Motor connector Han-Drive 10e for 230 VΔ/400 VY	**R70**	✓	✓	✓	✓	✓	✓	✓	–	–	–			
Motor connector Han-Drive 10e EMC for 230 VΔ/400 VY	**R71**	✓	✓	✓	✓	✓	✓	✓	–	–	–			
Small motor connector CQ12 with EMC	**R72**	–	–	✓	✓	–	–	–	–	–	–	Not for:	③	
Small motor connector CQ12 without EMC	**R73**	–	–	✓	✓	–	–	–	–	–	–	Not for:	③	
Version with reduced silicon amount according to VDMA 24364-C1/T70	**R77**	✓	✓	✓	✓	✓	✓	✓	✓	✓	✓			
Windings and insulation														
Temperature class 155 (F), utilized acc. to 155 (F), with service factor	**N01**	–	–	–	–	✓	✓	✓	✓	✓	✓	Not for:	③	
Temperature class 155 (F), utilized acc. to 155 (F), with increased power	**N02**	–	–	–	–	✓	✓	✓	✓	✓	✓	Not for:	③	
Temperature class 155 (F), utilized acc. to 155 (F), with increased coolant temperature	**N03**	✓	✓	✓	✓	✓	✓	✓	✓	✓	✓	Not for:	③	
Temperature class 155 (F), utilized acc. to 130 (B), coolant temperature 45 °C, derating approx. 4 %	**N05**	✓	✓	✓	✓	✓	✓	✓	✓	✓	✓			
Temperature class 155 (F), utilized acc. to 130 (B), coolant temperature 50 °C, derating approx. 8 %	**N06**	✓	✓	✓	✓	✓	✓	✓	✓	✓	✓			
Temperature class 155 (F), utilized acc. to 130 (B), coolant temperature 55 °C, derating approx. 13 %	**N07**	✓	✓	✓	✓	✓	✓	✓	✓	✓	✓			
Temperature class 155 (F), utilized acc. to 130 (B), coolant temperature 60 °C, derating approx. 18 %	**N08**	✓	✓	✓	✓	✓	✓	✓	✓	✓	✓			
Temperature class 180 (H)	**N10**	✓	✓	✓	✓	O. R.	O. R.	–	–	–	–	Not for:	①, ③, ⑥, ⑦, ⑨, ⑪	
Temperature class 180 (H) at rated power and max. CT 60 °C	**N11**	✓	✓	✓	✓	✓	✓	✓	✓	✓	✓	Not for:	①, ③	
Increased air humidity/temperature with 30 to 60 g water per m³ of air	**N30**	✓	✓	✓	✓	✓	✓	✓	✓	✓	✓			
Increased air humidity/temperature with 60 to 100 g water per m³ of air	**N31**	✓	✓	✓	✓	✓	✓	✓	✓	✓	✓			
Temperature class 155 (F), utilized acc. to 130 (B), with higher coolant temperature and/or installation altitude	**Y50 •** CT .. °C or IA .... m above sea level	✓	✓	✓	✓	✓	✓	✓	✓	✓	✓			
Temperature class 155 (F), utilized acc. to 155 (F), other requirements	**Y52 •** CT .. °C or IA .... m above sea level	✓	✓	✓	✓	✓	✓	✓	✓	✓	✓	Not for:	③	
Temperature class 180 (H), utilized according to 155 (F)	**Y75 •** CT .. °C or IA .... m above sea level	–	–	–	–	O. R.	O. R.	O. R.	O. R.	–	–	Not for:	①, ③	

For legends, see page 3/131.

© Innomotics 2024

Innomotics GP and Innomotics SD standard motors

Aluminum series Innomotics GP 1LE10

Special versions	Additional identification code -Z with order code and plain text if required	Frame size 63	71	80	90	100	112	132	160	180	200	Motor version		
						1LE1004						IEC	IE4	①
		1LE1003											IE3	②
						1LE1083								③
		1LE1001											IE2	④
		1LE1002											IE1	⑤
		1LE1043										APAC Line	IE3	⑥
				1LE1041									IE2	⑦
		1LE1023										Eagle Line	NPE (NEMA)	⑧
					1LE1021								NEE (NEMA)	⑨
						1LE1011						Pole-changing		⑩
1LE10 . . - . . . . . - . . . . -Z	Order code					1LE1012								⑪
Colors and paint finish														
Standard paint finish C2 in RAL 7030 stone gray		☐	☐	☐	☐	☐	☐	☐	☐	☐	☐			
Unpainted (only cast-iron parts primed)	**S00**	○	○	○	○	○	○	○	○	○	○			
Unpainted, only primed	**S01**	✓	✓	✓	✓	✓	✓	✓	✓	✓	✓			
Special paint finish C3	**S02**	✓	✓	✓	✓	✓	✓	✓	✓	✓	✓			
Special paint finish sea air resistant C4	**S03**	✓	✓	✓	✓	✓	✓	✓	✓	✓	✓			
Internal coating	**S05**	✓	✓	✓	✓	✓	✓	✓	✓	✓	✓			
Top coat polyurethane	**S06**	✓	✓	✓	✓	✓	✓	✓	✓	✓	✓			
Paint finish in other standard RAL colors: RAL 1015, 3000, 5002, 5009, 5010, 5012, 5015, 6011, 7001, 7011, 7016, 7031, 7032, 7035, 7037, 8012, 9005, 9010 (see Catalog Section 1 "Introduction")	**Y53 •** and paint finish RAL....	✓	✓	✓	✓	✓	✓	✓	✓	✓	✓			
Paint finish in special RAL colors: For RAL colors, see "Special paint finish in special RAL colors" (see Catalog Section 1 "Introduction")	**Y56 •** and paint finish RAL....	✓	✓	✓	✓	✓	✓	✓	✓	✓	✓			
Non-standard colors Colors see "Paint finish in non-standard colors (see Catalog Section 1 "Introduction")	**Y66 •** and paint finish	✓	✓	✓	✓	✓	✓	✓	✓	✓	✓			
Modular technology – Basic versions														
Mounting of holding brake (standard assignment)	**F01**	✓	✓	✓	✓	✓	✓	✓	✓	✓	✓			
Mounting of PRECIMA-brake	**F04**	–	–	–	–	✓	✓	✓	✓	✓	✓			
Mounting of separately driven fan	**F70**	✓	✓	✓	✓	✓	✓	✓	✓	✓	✓			
Mounting of Kübler Sendix 5020 HTL, 1024 I rotary pulse encoder	**G11**	✓	✓	✓	✓	✓	✓	✓	✓	✓	✓			
Mounting of Kübler Sendix 5020 TTL, 1024 I rotary pulse encoder	**G12**	✓	✓	✓	✓	✓	✓	✓	✓	✓	✓			
Modular technology – Additional versions														
Brake supply voltage 24 V DC	**F10**	✓	✓	✓	✓	✓	✓	✓	✓	✓	✓			
Brake supply voltage 230 V AC, 50/60 Hz	**F11**	✓	✓	✓	✓	○	○	○	○	○	○			
Brake supply voltage 400 V AC, 50/60 Hz	**F12**	✓	✓	✓	✓	✓	✓	✓	✓	✓	✓			
Brake supply voltage 180 V DC	**F17**	✓	✓	✓	✓	✓	✓	✓	✓	✓	✓			
Brake supply voltage 205 V DC	**F18**	✓	✓	✓	✓	✓	✓	✓	✓	✓	✓			
Mechanical manual brake release with lever (no locking)	**F50**	✓	✓	✓	✓	✓	✓	✓	✓	✓	✓			
Special technology														
Mounting of HOG 86E rotary pulse encoder	**G03**	–	–	–	–	✓	✓	✓	✓	✓	✓			
Mounting of LL 861 900 220 rotary pulse encoder	**G04**	–	–	–	–	✓	✓	✓	✓	✓	✓			
Mounting of HOG 9 DN 1024 I rotary pulse encoder	**G05**	–	–	–	–	✓	✓	✓	✓	✓	✓			
Mounting of HOG 10 D 1024 I rotary pulse encoder	**G06**	–	–	–	–	✓	✓	✓	✓	✓	✓			
Mounting of Kübler Sendix 5834FS2 1024, SIL-2 rotary pulse encoder	**G21**	–	–	–	–	✓	✓	✓	✓	✓	✓			
Mounting of Kübler Sendix 5834FS3 1024, SIL-3 rotary pulse encoder	**G22**	–	–	–	–	✓	✓	✓	✓	✓	✓			
Mounting of HOGS100S-B76.626.01024.1 rotary pulse encoder	**G25**	–	–	–	–		–	–	–	✓	✓	Only for:	③	
Mounting of LL FSI 862-184560-1024, SIL-2 rotary pulse encoder	**G27**	–	–	–	–	–	–	–	–	✓	✓	Only for:	③	
Mounting of rotary pulse encoder XSI 850 Overspeed	**G93**	–	–	–	–	–	–	–	–	✓	✓			
Mounting of rotary pulse encoder XHI 861 Overspeed	**G94**	–	–	–	–	–	–	–	–	✓	✓			

For legends, see page 3/131.

© Innomotics 2024

Innomotics GP and Innomotics SD standard motors

Aluminum series Innomotics GP 1LE10

Special versions	Additional identification code -Z with order code and plain text if required	Frame size 63	71	80	90	100	112	132	160	180	200	Motor version		
						1LE1004						IEC	IE4	①
		1LE1003											IE3	②
						1LE1083								③
		1LE1001											IE2	④
		1LE1002											IE1	⑤
		1LE1043										APAC Line	IE3	⑥
				1LE1041									IE2	⑦
		1LE1023										Eagle Line	NPE (NEMA)	⑧
					1LE1021								NEE (NEMA)	⑨
						1LE1011						Pole-changing		⑩
1LE10 . . - . . . . . - . . . . -Z	Order code					1LE1012								⑪
Mechanical version and degrees of protection														
Low-noise version for 2-pole motors with clockwise direction of rotation	**F77**	–	–	–	–	–	–	✓	✓	✓	✓			
Low-noise version for 2-pole motors with counterclockwise direction of rotation	**F78**	–	–	–	–	–	–	✓	✓	✓	✓			
Prepared for mountings, centering hole only	**G40**	–	–	✓	✓	✓	✓	✓	✓	☐	☐			
Prepared for mountings with shaft D12	**G41**	✓	✓	✓	✓	✓	✓	✓	✓	✓	✓			
Prepared for mountings with shaft D16	**G42**	–	–	O. R.	O. R.	✓	✓	✓	✓	✓	✓			
Mechanical protection for encoder	**G43**	O. R.	O. R.	✓	✓	✓	✓	✓	✓	✓	✓			
Protective cover	**H00**	✓	✓	✓	✓	✓	✓	✓	✓	✓	✓			
Screwed-on (instead of cast) feet	**H01**	–	–	✓	✓	✓	✓	✓	✓	☐	☐			
Vibration-proof version; vibration resistance to Class 3M4 according to IEC 60721-3-3:1994	**H02**	✓	✓	✓	✓	✓	✓	✓	✓	✓	✓			
Condensation drainage holes	**H03**	✓	✓	✓	✓	✓	✓	✓	✓	✓	✓			
Rust-resistant screws (externally)	**H07**	✓	✓	✓	✓	✓	✓	✓	✓	✓	✓			
Housing with screw mounting	**H10**	–	–	✓	✓	–	–	–	–	✓	✓	Only for:	②, ④, ⑥, ⑦ (frame sizes 80, 90), ⑧, ⑨	
Degree of protection IP66	**H19**	✓	✓	✓	✓	✓	✓	✓	✓	✓	✓			
Degree of protection IP65	**H20**	✓	✓	✓	✓	✓	✓	✓	✓	✓	✓			
Degree of protection IP56	**H22**	✓	✓	✓	✓	✓	✓	✓	✓	✓	✓			
Drive-end seal for flange-mounting motors, oil-tight to 0.1 bar	**H23**	✓	✓	✓	✓	✓	✓	✓	✓	✓	✓			
Coolant temperature and installation altitude														
Coolant temperature –40 to +40 °C	**D03**	✓	✓	✓	✓	✓	✓	✓	✓	✓	✓			
Coolant temperature –30 to +40 °C	**D04**	✓	✓	✓	✓	✓	✓	✓	✓	✓	✓			
Versions in accordance with standards and specifications														
VIK version	**C02**	–	–	✓	✓	✓	✓	✓	✓	–	–	Only for:	②	
CCC China Compulsory Certification	**D01**	✓	✓	✓	✓	–	–	–	–	–	–			
Motor without CE marking for export outside EEA (see EU Directive 2019/1781)	**D22**	–	O	O	O	O	O	O	O	O	O			
Motor exclusively according to the Energy-related Products Law, Article 1dated 27.2.2008, motor to be used in means of transport for persons and goods	**D23**	–	O	O	O	O	O	O	O	O	O	Only for:	④, ⑤, ⑦, ⑨, ⑩, ⑪	
Electrical according to NEMA MG1-12	**D30**	✓	✓	✓	✓	✓	✓	✓	✓	✓	✓	Not for:	⑧, ⑨	
	–	–	–	☐	☐	☐	☐	☐	☐	☐	☐	Only for:	⑧, ⑨	
Design according to UL with "Recognition Mark"	**D31**	✓	✓	✓	✓	✓	✓	✓	✓	✓	✓	Not for:	⑧, ⑨	
	–	–	–	☐	☐	☐	☐	☐	☐	☐	☐	Only for:	⑧, ⑨	
KEA Korea Energy Efficiency Label	**D33**	–	–	✓	✓	✓	✓	✓	✓	✓	✓	Only for:	⑥, ⑦	
		–	–	–	–	O. R.	O. R.	O. R.	O. R.	O. R.	O. R.	Only for:	③ (2-pole to 6-pole)	
China Energy Efficiency Label	**D34**	–	–	O	O	O	O	O	O	O	O	Not for:	④, ⑤, ⑦, ⑩, ⑪	
		–	–	–	–	O. R.	O. R.	O. R.	O. R.	O. R.	O. R.	Only for:	③	
Canadian regulations (CSA)	**D40**	✓	✓	✓	✓	✓	✓	✓	✓	✓	✓	Not for:	⑤, ⑧, ⑨, ⑩, ⑪	
	–	–	–	☐	☐	☐	☐	☐	☐	☐	☐	Only for:	⑧, ⑨	
NEMA Premium Efficient, North America version acc. to NEMA MG1, Table 12-12, incl. UL and CSA	**D41**	–	–	–	–	O. R.	O. R.	O. R.	O. R.	O. R.	O. R.	Only for:	③	
TR CU product safety certificate EAC for Eurasian Customs Union	**D47**	✓	✓	✓	✓	✓	✓	✓	✓	✓	✓			
MEPS Australia	**D70**	–	–	✓	✓	✓	✓	✓	✓	✓	✓	Only for:	②, ③, ⑥, ⑧	
BIS India (Indian standard IS 12615:2018)	**D72**	✓	✓	✓	✓	✓	✓	✓	✓	✓	✓	Only for: Not for:	②, ③, ⑥, ⑧ 8-pole motors	
SASO EER	**D73**	–	–	O. R.	O. R.	O. R.	O. R.	O. R.	O. R.	O. R.	O. R.	Only for:	②, ③, ⑥, ⑦	
UKCA-marking		☐	☐	☐	☐	☐	☐	☐	☐	☐	☐			

For legends, see page 3/131.

© Innomotics 2024

Innomotics GP and Innomotics SD standard motors

Aluminum series Innomotics GP 1LE10

Special versions	Additional identification code -Z with order code and plain text if required	Frame size 63	71	80	90	100	112	132	160	180	200	Motor version		
						1LE1004						IEC	IE4	①
		1LE1003											IE3	②
						1LE1083								③
		1LE1001											IE2	④
		1LE1002											IE1	⑤
		1LE1043										APAC Line	IE3	⑥
				1LE1041									IE2	⑦
		1LE1023										Eagle Line	NPE (NEMA)	⑧
					1LE1021								NEE (NEMA)	⑨
						1LE1011						Pole-changing		⑩
1LE10 . . - . . . . . - . . . . -Z	Order code					1LE1012								⑪
Versions in accordance with standards and specifications (continued)														
Version suitable for railways IC411, EN IEC 60349, with EN 45545, with external fan and fan cover in meta l	**L91**	✓	✓	✓	✓	✓	✓	✓	✓	✓	✓	Not for:	①, ③	
Version suitable for railways IC418, EN IEC 60349, without EN 45545, with external fan and fan cover	**L92**	✓	✓	✓	✓	✓	✓	✓	✓	✓	✓	Not for:	①, ③	
Bearings and lubrication														
Regreasing device with M10 × 1 grease nipple according to DIN 71412-A	**L19**	–	–	–	–	–	–	–	–	✓	✓			
Located bearing DE	**L20**	✓	✓	✓	✓	✓	✓	✓	✓	✓	✓			
Located bearing NDE	**L21**	✓	✓	✓	✓	✓	✓	✓	☐	☐	☐			
Bearing design for increased cantilever forces	**L22**	–	–	✓	✓	✓	✓	✓	✓	✓	✓	Not for:	Motors of frame sizes 80 and 90	
Regreasing device	**L23**	–	–	–	–	✓	✓	✓	✓	✓	✓			
Bearings reinforced at both ends for DE and NDE, bearing size 63	**L25**	–	–	✓	✓	✓	✓	✓	✓	✓	✓	Not for:	Motors of frame sizes 80 and 90	
Bearings for high axial tension forces	**L34**	–	–	–	–	✓	✓	✓	✓	✓	✓			
Bearing insulation NDE	**L51**	–	–	–	–	✓	✓	✓	✓	✓	✓			
Measuring nipple for SPM shock pulse measurement for bearing inspection	**Q01**	–	–	–	–	✓	✓	✓	✓	✓	✓			
Motor design VSD, higher speed up to .... rpm, vibration level .. acc. IEC60034-14, with or w/o routine test	**Y37**	O. R.	O. R.	O. R.	O. R.	O. R.	O. R.	O. R.	O. R.	O. R.	O. R.			
Balance and vibration severity														
Vibration severity grade A		☐	☐	☐	☐	☐	☐	☐	☐	☐	☐			
Vibration severity grade B	**L00**	✓	✓	✓	✓	✓	✓	✓	✓	✓	✓			
Half-key balancing (standard)		☐	☐	☐	☐	☐	☐	☐	☐	☐	☐			
Balancing without feather key	**L01**	✓	✓	✓	✓	✓	✓	✓	✓	✓	✓			
Full-key balancing	**L02**	–	–	✓	✓	✓	✓	✓	✓	✓	✓			
Shaft and rotor														
Shaft extension with standard dimensions, without feather keyway	**L04**	✓	✓	✓	✓	✓	✓	✓	✓	✓	✓			
Standard, cylindrical shaft extension (second shaft extension) NDE acc. to EN 50347	**L05**	✓	✓	✓	✓	✓	✓	✓	✓	✓	✓			
Standard shaft made of stainless steel (e.g. 1.4021)	**L06**	✓	✓	✓	✓	✓	✓	✓	✓	✓	✓			
Shaft extension run-out in accordance with IEC 60072-1 precision class	**L07**	✓	✓	✓	✓	✓	✓	✓	✓	✓	✓			
Shaft extension run-out, concentricity and perpendicularity in accordance with IEC 60072-1 precision class for flange-mounted motors	**L08**	✓	✓	✓	✓	✓	✓	✓	✓	✓	✓			
Non-standard cylindrical shaft extension, DE	**Y58 •** and customer specifications	✓	✓	✓	✓	✓	✓	✓	✓	✓	✓			
Non-standard cylindrical shaft extension, NDE	**Y59 •** and customer specifications	✓	✓	✓	✓	✓	✓	✓	✓	✓	✓			

For legends, see page 3/131.

© Innomotics 2024

Innomotics GP and Innomotics SD standard motors

Aluminum series Innomotics GP 1LE10

Special versions	Additional identification code -Z with order code and plain text if required	Frame size 63	71	80	90	100	112	132	160	180	200	Motor version		
						1LE1004						IEC	IE4	①
		1LE1003											IE3	②
						1LE1083								③
		1LE1001											IE2	④
		1LE1002											IE1	⑤
		1LE1043										APAC Line	IE3	⑥
				1LE1041									IE2	⑦
		1LE1023										Eagle Line	NPE (NEMA)	⑧
					1LE1021								NEE (NEMA)	⑨
						1LE1011						Pole-changing		⑩
1LE10 . . - . . . . . - . . . . -Z	Order code					1LE1012								⑪
Heating and ventilation														
Sheet metal fan cover	**F74**	–	–	✓	✓	✓	✓	✓	✓	✓	✓			
Fan cover for textile industry	**F75**	✓	✓	✓	✓	✓	✓	✓	✓	✓	✓			
Metal external fan	**F76**	✓	✓	✓	✓	✓	✓	✓	✓	✓	✓			
Without external fan and without fan cover	**F90**	✓	✓	✓	✓	✓	✓	✓	✓	✓	✓	Not for:	⑩, ⑪	
Anti-condensation heating for 230 V (2 terminals)	**Q02**	✓	✓	✓	✓	✓	✓	✓	✓	✓	✓			
Anti-condensation heating for 115 V (2 terminals)	**Q03**	✓	✓	✓	✓	✓	✓	✓	✓	✓	✓			
Rating plate and additional rating plates														
Additional rating plate for voltage tolerance	**B07**	✓	✓	✓	✓	✓	✓	✓	✓	✓	✓	Not for:	⑩, ⑪	
Second rating plate, loose	**M10**	✓	✓	✓	✓	✓	✓	✓	✓	✓	✓			
Rating plate, stainless steel	**M11**	✓	✓	✓	✓	✓	✓	✓	✓	✓	✓			
Additional rating plate with deviating rating plate data	**Y80 •** and customer specifications	✓	✓	✓	✓	✓	✓	✓	✓	✓	✓			
Additional rating plate with customer specifications	**Y82 •** and customer specifications	✓	✓	✓	✓	✓	✓	✓	✓	✓	✓			
Additional information on rating plate and on package label (max. 20 characters)	**Y84 •** and customer specifications	✓	✓	✓	✓	✓	✓	✓	✓	✓	✓			
Adhesive label, supplied loose (printed with: Article No., Serial No.; 2 lines of text)	**Y85 •** and customer specifications	–	–	–	–	✓	✓	✓	✓	✓	✓			
Packaging, safety notes, documentation and test certificates														
A printed version of the safety notes in German/English and safety notes in the language of the country of use is supplied in each wire-lattice pallet	**B01**	○	○	○	○	○	○	○	○	○	○			
Inspection certificate 3.1 according to EN 10204	**B02**	✓	✓	✓	✓	✓	✓	✓	✓	✓	✓			
Document - Electrical datasheet	**B60**	✓	✓	✓	✓	✓	✓	✓	✓	✓	✓			
Document - Order dimensional drawing	**B61**	✓	✓	✓	✓	✓	✓	✓	✓	✓	✓			
Type test with heat run for horizontal motors, with acceptance	**B83**	✓	✓	✓	✓	✓	✓	✓	✓	✓	✓			
"Basic" documentation package	**B90**	✓	✓	✓	✓	✓	✓	✓	✓	✓	✓			
"Advanced" documentation package	**B91**	✓	✓	✓	✓	✓	✓	✓	✓	✓	✓			
"Projects" documentation package	**B92**	✓	✓	✓	✓	✓	✓	✓	✓	✓	✓			
Wire-lattice pallet packaging	**B99**	○	○	○	○	○	○	○	○	○	○			

☐ Standard version
○ Without additional charge
• This order code only determines the price of the version – Additional plain text is required.
✓ With additional charge
O.R. Possible on request
– Not possible

Note:
The catalog provides an overview of the available motor options but doesn't detail the correct logic combinations.
For a customized selection tailored to your specific requirements, please use the Siemens Product Configurator at the following address: configurator.innomotics.com.

© Innomotics 2024

Innomotics GP and Innomotics SD standard motors

Cast-iron series Innomotics SD 1LE15 Basic Line, 1LE16 Performance Line

Selection and ordering data

Special versions	Additional identification code **-Z** with order code and plain text if required	Frame size 71	80	90	100	112	132	160	180	200	225	250	280	315	Motor version		
					1LE1504 Basic Line										IEC	IE4	①
					1LE1604 Performance Line												②
		1LE1503 Basic Line														IE3	③
					1LE1603 Performance Line												④
					1LE1583												⑤
		1LE1501 Basic Line														IE2	⑥
					1LE1601 Performance Line												⑦
					1LE1502 Basic Line											IE1	⑧
			1LE1543 Basic Line												APAC Line	IE3	⑨
					1LE1643 Performance Line												⑩
									1LE1541 Basic Line							IE2	⑪
		1LE1523 Basic Line													Eagle Line	NPE (NEMA)	⑫
					1LE1623 Performance Line												⑬
1LE1 . . . - . . . . . - . . . . -Z	Order code				1LE1521 Basic Line											NEE (NEMA)	⑭
Motor protection																	
1 or 3 PTC thermistors – for tripping (2 terminals)	**Q11**	–	–	–	✓	✓	✓	✓	✓	✓	✓	✓	✓	✓			
2 or 6 PTC thermistors – for alarm and tripping (4 terminals)	**Q12**	–	–	–	✓	✓	✓	✓	✓	✓	✓	✓	✓	✓			
3 bimetal sensors (NC contacts) for tripping (2 terminals)	**Q31**	–	–	–	✓	✓	✓	✓	✓	✓	✓	✓	✓	✓			
6 bimetal sensors (NC contacts) for alarm and tripping (4 terminals)	**Q32**	–	–	–	✓	✓	✓	✓	✓	✓	✓	✓	✓	✓			
3 bimetal sensors (NC contacts) for tripping (6 terminals)	**Q33**	–	–	–	✓	✓	✓	✓	✓	✓	✓	✓	✓	✓			
6 bimetal sensors (NC contacts) for alarm and tripping (12 terminals)	**Q34**	–	–	–	✓	✓	✓	✓	✓	✓	✓	✓	✓	✓			
1 Pt1000 resistance thermometer (2 terminals)	**Q35**	–	–	–	✓	✓	✓	✓	✓	✓	✓	✓	✓	✓			
2 Pt1000 resistance thermometers (4 terminals)	**Q36**	–	–	–	✓	✓	✓	✓	✓	✓	✓	✓	✓	✓			
3 Pt100 resistance thermometers -wire input (6 terminals)	**Q60**	–	–	–	✓	✓	✓	✓	✓	✓	✓	✓	✓	✓			
6 Pt100 resistance thermometers (12 terminals)	**Q61**	–	–	–	✓	✓	✓	✓	✓	✓	✓	✓	✓	✓			
1 Pt100 resistance thermometer (2 terminals)	**Q62**	–	–	–	✓	✓	✓	✓	✓	✓	✓	✓	✓	✓			
3 Pt100 resistance thermometers (9 terminals)	**Q63**	–	–	–	✓	✓	✓	✓	✓	✓	✓	✓	✓	✓			
6 Pt100 resistance thermometers (18 terminals)	**Q64**	–	–	–	✓	✓	✓	✓	✓	✓	✓	✓	✓	✓			
2 Pt100 resistance thermometers in basic configuration for bearing (4 terminals)	**Q72**	–	–	–	–	–	–	–	✓	✓	✓	✓	✓	✓			
2 Pt100 resistance thermometers for bearing (6 terminals)	**Q78**	–	–	–	–	–	–	–	✓	✓	✓	✓	✓	✓			
2 Pt100 double resistance thermometers for bearing (12 terminals)	**Q79**	–	–	–	–	–	–	–	✓	✓	✓	✓	✓	✓			
Motor connection and terminal box																	
External grounding	**H04**	✓	✓	✓	✓	✓	✓	✓	□	□	□	□	□	□			
Terminal box on NDE	**H08**	✓	✓	✓	✓	✓	✓	✓	✓	✓	✓	✓	✓	✓			
Second external grounding	**H70**	–	–	–	✓	✓	✓	✓	✓	✓	✓	✓	✓	✓			
Connected in star for dispatch	**M01**	✓	✓	✓	✓	✓	✓	✓	✓	✓	✓	✓	✓	✓			
Connected in delta for dispatch	**M02**	✓	✓	✓	✓	✓	✓	✓	✓	✓	✓	✓	✓	✓			
Rotation of the terminal box through 90°, entry from DE	**R10**	○	○	○	○	○	○	○	✓	✓	✓	✓	✓	✓			
Rotation of the terminal box through 90°, entry from NDE	**R11**	○	○	○	○	○	○	○	✓	✓	✓	✓	✓	✓			
Rotation of the terminal box through 180°	**R12**	○	○	○	○	○	○	○	✓	✓	✓	✓	✓	✓			
One EMC cable gland	**R14**	✓	✓	✓	✓	✓	✓	✓	✓	✓	✓	✓	✓	✓			
One metal cable gland	**R15**	✓	✓	✓	✓	✓	✓	✓	✓	✓	✓	✓	✓	✓			
EMC cable gland, maximum configuration	**R16**	✓	✓	✓	✓	✓	✓	✓	✓	✓	✓	✓	✓	✓			
Stud terminal for cable connection, accessories pack (3 items)	**R17**	–	–	–	–	–	–	–	–	–	–	✓	✓	✓			
Metal cable gland, maximum configuration	**R18**	✓	✓	✓	✓	✓	✓	✓	✓	✓	✓	✓	✓	✓			

For legends, see page 3/139.

© Innomotics 2024

Innomotics GP and Innomotics SD standard motors

Cast-iron series Innomotics SD 1LE15 Basic Line, 1LE16 Performance Line

Special versions	Additional identification code -Z with order code and plain text if required	Frame size													Motor version		
		71	80	90	100	112	132	160	180	200	225	250	280	315			
					1LE1504 Basic Line										IEC	IE4	①
					1LE1604 Performance Line												②
		1LE1503 Basic Line														IE3	③
					1LE1603 Performance Line												④
					1LE1583												⑤
		1LE1501 Basic Line														IE2	⑥
					1LE1601 Performance Line												⑦
					1LE1502 Basic Line											IE1	⑧
			1LE1543 Basic Line												APAC Line	IE3	⑨
					1LE1643 Performance Line												⑩
									1LE1541 Basic Line							IE2	⑪
		1LE1523 Basic Line													Eagle Line	NPE (NEMA)	⑫
					1LE1623 Performance Line												⑬
1LE1 . . . - . . . . . - . . . . -Z	Order code				1LE1521 Basic Line											NEE (NEMA)	⑭
Motor connection and terminal box (continued)																	
Saddle terminal for connection without cable lug, accessories pack	**R19**	–	–	–	–	–	–	–	–	–	–	✓	✓	✓			
3 cables protruding, 0.5 m long	**R20**	✓	✓	✓	✓	✓	✓	✓	✓	–	–	–	–	–			
3 cables protruding, 1.5 m long	**R21**	✓	✓	✓	✓	✓	✓	✓	O.R.	O.R.	O.R.	O.R.	O.R.	O.R.			
6 cables protruding, 0.5 m long	**R22**	✓	✓	✓	✓	✓	✓	✓	✓	–	–	–	–	–			
6 cables protruding, 1.5 m long	**R23**	✓	✓	✓	✓	✓	✓	✓	O.R.	O.R.	O.R.	O.R.	O.R.	O.R.			
6 cables protruding, 3 m long	**R24**	✓	✓	✓	✓	✓	✓	✓	O.R.	O.R.	O.R.	O.R.	O.R.	O.R.			
Reduction piece for M cable gland in accordance with British Standard, mounted on both cable entries	**R30**	–	–	–	✓	✓	✓	✓	–	–	–	–	–	–			
Larger terminal box	**R50**	✓	✓	✓	✓	✓	✓	✓	✓	✓	✓	✓	✓	✓			
Terminal box without cable entry opening	**R51**	–	–	–	O	O	O	O	O	O	O	O	O	O			
Drilled removable entry plate	**R52**	–	–	–	–	–	–	–	✓	✓	✓	✓	✓	✓			
Undrilled removable entry plate	**R53**	–	–	–	–	–	–	–	✓	✓	✓	✓	✓	✓			
Cast-iron auxiliary terminal box (small)	**R62**	–	–	–	–	–	–	✓	✓	✓	✓	✓	✓	✓			
		–	–	–	✓	✓	✓	–	–	–	–	–	–	–			
2 small cast-iron auxiliary terminal boxes	**R67**	–	–	–	✓	✓	✓	✓	✓	✓	✓	✓	✓	✓			
Version with reduced silicon amount according to VDMA 24364-C1/T70	**R77**	✓	✓	✓	✓	✓	✓	✓	✓	✓	✓	✓	✓	✓			
Non-standard threaded through hole (metric, NPT or G thread)	**Y61 •** and customer specifications	–	–	–	✓	✓	✓	✓	✓	✓	✓	✓	✓	✓			
Windings and insulation																	
Temperature class 155 (F), utilized according to 155 (F), with service factor	**N01**	✓	✓	✓	✓	✓	✓	✓	✓	✓	✓	✓	✓	✓	Not for:	⑤	
Temperature class 155 (F), utilized acc. to 155 (F), with increased power	**N02**	✓	✓	✓	✓	✓	✓	✓	✓	✓	✓	✓	✓	✓	Not for:	⑤	
Temperature class 155 (F), utilized acc. to 155 (F), with increased coolant temperature	**N03**	✓	✓	✓	✓	✓	✓	✓	✓	✓	✓	✓	✓	✓	Not for:	⑤	
Temperature class 155 (F), utilized acc. to 130 (B), coolant temperature 45 °C, derating approx. 4 %	**N05**	✓	✓	✓	✓	✓	✓	✓	✓	✓	✓	✓	✓	✓			
Temperature class 155 (F), utilized acc. to 130 (B), coolant temperature 50 °C, derating approx. 8 %	**N06**	✓	✓	✓	✓	✓	✓	✓	✓	✓	✓	✓	✓	✓			
Temperature class 155 (F), utilized acc. to 130 (B), coolant temperature 55 °C, derating approx. 13 %	**N07**	✓	✓	✓	✓	✓	✓	✓	✓	✓	✓	✓	✓	✓			
Temperature class 155 (F), utilized acc. to 130 (B), coolant temperature 60 °C, derating approx. 18 %	**N08**	✓	✓	✓	✓	✓	✓	✓	✓	✓	✓	✓	✓	✓			
Temperature class 180 (H)	**N10**	✓	✓	✓	✓	✓	✓	✓	✓	✓	✓	✓	✓	✓	Not for:	①, ②, ⑤, ⑨, ⑩, ⑪, ⑫, ⑬, ⑭	
Temperature class 180 (H) at rated power and max. CT 60 °C	**N11**	✓	✓	✓	✓	✓	✓	✓	✓	✓	✓	✓	✓	✓	Not for:	①, ②, ⑤	
Increased air humidity/temperature with 30 to 60 g water per m^3 of air	**N30**	✓	✓	✓	✓	✓	✓	✓	✓	✓	✓	✓	✓	✓			
Increased air humidity/temperature with 60 to 100 g water per m^3 of air	**N31**	✓	✓	✓	✓	✓	✓	✓	✓	✓	✓	✓	✓	✓			

For legends, see page 3/139.

© Innomotics 2024

Innomotics GP and Innomotics SD standard motors

Cast-iron series Innomotics SD 1LE15 Basic Line, 1LE16 Performance Line

Special versions	Additional identification code -Z with order code and plain text if required	Frame size													Motor version		
		71	80	90	100	112	132	160	180	200	225	250	280	315			
					1LE1504 Basic Line										IEC	IE4	①
					1LE1604 Performance Line												②
		1LE1503 Basic Line														IE3	③
					1LE1603 Performance Line												④
					1LE1583												⑤
		1LE1501 Basic Line														IE2	⑥
					1LE1601 Performance Line												⑦
					1LE1502 Basic Line											IE1	⑧
			1LE1543 Basic Line												APAC Line	IE3	⑨
					1LE1643 Performance Line												⑩
									1LE1541 Basic Line							IE2	⑪
		1LE1523 Basic Line													Eagle Line	NPE (NEMA)	⑫
					1LE1623 Performance Line												⑬
1LE1 . . . - . . . . . - . . . . -Z	Order code				1LE1521 Basic Line											NEE (NEMA)	⑭
Windings and insulation (continued)																	
Temperature class 155 (F), utilized acc. to 130 (B), with higher coolant temperature and/or installation altitude	**Y50 •** CT .. °C or IA .... m above sea level	✓	✓	✓	✓	✓	✓	✓	✓	✓	✓	✓	✓	✓			
Temperature class 155 (F), utilized acc. to 155 (F), other requirements	**Y52 •** CT .. °C or IA .... m above sea level	✓	✓	✓	✓	✓	✓	✓	✓	✓	✓	✓	✓	✓	Not for:	⑤	
Temperature class 180 (H), utilized according to 155 (F)	**Y75 •** CT .. °C or IA .... m above sea level	–	–	–	✓	✓	✓	✓	✓	✓	✓	✓	✓	✓	Not for:	①, ②, ⑤	
Colors and paint finish																	
Standard paint finish C2 in RAL 7030 stone gray		□	□	□	□	□	□	□	□	□	□	□	□	□	Only for:	①, ③, ⑤, ⑥, ⑧, ⑨, ⑪, ⑫, ⑭	
Unpainted (only cast-iron parts primed)	**S00**	○	○	○	○	○	○	○	○	○	○	○	○	○			
Unpainted, only primed	**S01**	✓	✓	✓	✓	✓	✓	✓	✓	✓	✓	✓	✓	✓			
Special paint finish C3	**S02**	✓	✓	✓	✓	✓	✓	✓	✓	✓	✓	✓	✓	✓	Not for:	②, ④, ⑦, ⑩, ⑬	
	–	□	□	□	□	□	□	□	□	□	□	□	□	□	Only for:	②, ④, ⑦, ⑩, ⑬	
Special paint finish sea air resistant C4	**S03**	✓	✓	✓	✓	✓	✓	✓	✓	✓	✓	✓	✓	✓			
Special paint finish for use offshore C5	**S04**	✓	✓	✓	✓	✓	✓	✓	✓	✓	✓	✓	✓	✓			
Internal coating	**S05**	–	–	–	✓	✓	✓	✓	✓	✓	✓	✓	✓	✓			
Top coat polyurethane	**S06**	✓	✓	✓	✓	✓	✓	✓	✓	✓	✓	✓	✓	✓			
C5mid Special paint system with durability "medium"	**S08**	✓	✓	✓	✓	✓	✓	✓	✓	✓	✓	✓	✓	✓			
CX Special paint system for offshore with durability "high"	**S09**	✓	✓	✓	✓	✓	✓	✓	✓	✓	✓	✓	✓	✓			
Paint finish in other standard RAL colors: RAL 1015, 3000, 5002, 5009, 5010, 5012, 5015, 6011, 7001, 7011, 7016, 7031, 7032, 7035, 7037, 8012, 9005, 9010 (see Catalog Section 1 "Introduction")	**Y53 •** and paint finish RAL....	✓	✓	✓	✓	✓	✓	✓	✓	✓	✓	✓	✓	✓	Only for:	①, ③, ⑤, ⑥, ⑧, ⑨, ⑪, ⑫, ⑭	
Paint finish in special RAL colors: For RAL colors, see "Special paint finish in special RAL colors" (see Catalog Section 1 "Introduction")	**Y56 •** and paint finish RAL....	✓	✓	✓	✓	✓	✓	✓	✓	✓	✓	✓	✓	✓			
Non-standard colors Colors see "Paint finish in non-standard colors (see Catalog Section 1 "Introduction")	**Y66•** and paint finish	✓	✓	✓	✓	✓	✓	✓	✓	✓	✓	✓	✓	✓			
Modular technology – Basic versions																	
Mounting of holding brake (standard assignment)	**F01**	–	–	–	✓	✓	✓	✓	✓	✓	✓	✓	✓	✓	Not for:	④ frame sizes ≥ 160	
Mounting of PRECIMA brake	**F04**	–	–	–	✓	✓	✓	✓	✓	✓	✓	✓	✓	✓			
Mounting of separately driven fan	**F70**	✓	✓	✓	✓	✓	✓	✓	✓	✓	✓	✓	✓	✓			
Mounting of Kübler Sendix 5020 HTL, 1024 I rotary pulse encoder	**G11**	✓	✓	✓	✓	✓	✓	✓	✓	✓	✓	✓	✓	✓			
Mounting of Kübler Sendix 5020 TTL, 1024 I rotary pulse encoder	**G12**	✓	✓	✓	✓	✓	✓	✓	✓	✓	✓	✓	✓	✓			
Modular technology – Additional versions																	
Brake supply voltage 24 V DC	**F10**	–	–	–	✓	✓	✓	✓	✓	✓	✓	✓	✓	✓			
Brake supply voltage 230 V AC, 50/60 Hz	**F11**	–	–	–	○	○	○	○	○	○	○	○	○	○			
Brake supply voltage 400 V AC, 50/60 Hz	**F12**	–	–	–	✓	✓	✓	✓	✓	✓	✓	✓	✓	✓			
Brake supply voltage 180 V DC	**F17**	–	–	–	✓	✓	✓	✓	✓	✓	✓	–	–	–			
Brake supply voltage 205 V DC	**F18**	–	–	–	✓	✓	✓	✓	✓	✓	✓	–	–	–			

For legends, see page 3/139.

© Innomotics 2024

Innomotics GP and Innomotics SD standard motors

Cast-iron series Innomotics SD 1LE15 Basic Line, 1LE16 Performance Line

Special versions	Additional identification code -Z with order code and plain text if required	Frame size													Motor version		
		71	80	90	100	112	132	160	180	200	225	250	280	315			
					1LE1504 Basic Line										IEC	IE4	①
					1LE1604 Performance Line												②
		1LE1503 Basic Line														IE3	③
					1LE1603 Performance Line												④
					1LE1583												⑤
		1LE1501 Basic Line														IE2	⑥
					1LE1601 Performance Line												⑦
					1LE1502 Basic Line											IE1	⑧
			1LE1543 Basic Line												APAC Line	IE3	⑨
					1LE1643 Performance Line												⑩
									1LE1541 Basic Line							IE2	⑪
		1LE1523 Basic Line													Eagle Line	NPE (NEMA)	⑫
					1LE1623 Performance Line												⑬
1LE1 . . . - . . . . . - . . . . -Z	Order code				1LE1521 Basic Line											NEE (NEMA)	⑭
Modular technology – Additional versions (continued)																	
Backstop, counterclockwise motion blocked, clockwise direction of rotation	**F40**	–	–	–	–	–	✓	✓	✓	✓	✓	✓	✓	✓			
Backstop, clockwise motion blocked, counterclockwise direction of rotation	**F41**	–	–	–	–	–	✓	✓	✓	✓	✓	✓	✓	✓			
Mechanical manual brake release with lever (no locking)	**F50**	–	–	–	✓	✓	✓	✓	✓	✓	✓	✓	✓	✓			
Special technology																	
Mounting of HOG 86E rotary pulse encoder	**G03**				✓	✓	✓	✓	✓	✓	✓	✓	✓	✓			
Mounting of LL 861 900 220 rotary pulse encoder	**G04**	–	–	–	✓	✓	✓	✓	✓	✓	✓	✓	✓	✓			
Mounting of HOG 9 DN 1024 I rotary pulse encoder	**G05**	–	–	–	✓	✓	✓	✓	✓	✓	✓	✓	✓	✓			
Mounting of HOG 10 D 1024 I rotary pulse encoder	**G06**	–	–	–	✓	✓	✓	✓	✓	✓	✓	✓	✓	✓			
Mounting of POG 10 DN rotary pulse encoder (only in combination with separately driven fan or brake)	**G07**	–	–	–	–	–	–	–	✓	✓	✓	✓	✓	✓			
Mounting of POG 9 rotary pulse encoder (only in combination with separately driven fan or brake)	**G08**	–	–	–	–	–	–	–	✓	✓	✓	✓	✓	✓			
Mounting of HOG 10 DN 1024 I rotary pulse encoder, terminal box moisture protection	**G15**	–	–	–	✓	✓	✓	✓	✓	✓	✓	✓	✓	✓			
Mounting of HOG 10 DN 1024 I rotary pulse encoder, terminal box dust protection	**G16**	–	–	–	✓	✓	✓	✓	✓	✓	✓	✓	✓	✓			
Mounting of Kübler Sendix 5834FS2 1024, SIL-2 rotary pulse encoder	**G21**	–	–	–	✓	✓	✓	✓	✓	✓	✓	✓	✓	✓	Only for:	⑤	
Mounting of Kübler Sendix 5834FS3 1024, SIL-3 rotary pulse encoder	**G22**	–	–	–	✓	✓	✓	✓	✓	✓	✓	✓	✓	✓	Only for:	⑤	
Mounting of HOGS100S-B76.626.01024.1 rotary pulse encoder	**G25**	–	–	–	–	–	–	–	✓	✓	✓	✓	✓	✓	Only for:	⑤	
Mounting of LL FSI 862-184560-1024, SIL-2 rotary pulse encoder	**G27**	–	–	–	–	–	–	–	✓	✓	✓	✓	✓	✓	Only for:	⑤	
Mounting of rotary pulse encoder XSI 850 Overspeed	**G93**	–	–	–	–	–	–	–	✓	✓	✓	✓	✓	✓			
Mounting of rotary pulse encoder XHI 861 Overspeed	**G94**	–	–	–	–	–	–	–	✓	✓	✓	✓	✓	✓			
Mounting of a special type of rotary pulse encoder	**Y70 •** and customer specifications	–	–	–	O.R.	O.R.	O.R.	O.R.	O.R.	O.R.	O.R.	O.R.	O.R.	O.R.			
Mounting of rotary pulse encoder HOG 10 DN 1024 I + FSL, (integrated centrifugal switch, speed ... rpm), terminal box moisture protection	**Y74 •** and spec. speed .... rpm	–	–	–	–	–	–	–	✓	✓	✓	✓	✓	✓			
Mounting of rotary pulse encoder HOG 10 DN 1024 I + FSL, (integrated centrifugal switch, speed .... rpm), terminal box dust protection	**Y76 •** and spec. speed .... rpm	–	–	–	–	–	–	–	✓	✓	✓	✓	✓	✓			

For legends, see page 3/139.

© Innomotics 2024

Innomotics GP and Innomotics SD standard motors

Cast-iron series Innomotics SD 1LE15 Basic Line, 1LE16 Performance Line

Special versions	Additional identification code -Z with order code and plain text if required	Frame size													Motor version		
		71	80	90	100	112	132	160	180	200	225	250	280	315			
					1LE1504 Basic Line										IEC	IE4	①
					1LE1604 Performance Line												②
		1LE1503 Basic Line														IE3	③
					1LE1603 Performance Line												④
					1LE1583												⑤
		1LE1501 Basic Line														IE2	⑥
					1LE1601 Performance Line												⑦
					1LE1502 Basic Line											IE1	⑧
			1LE1543 Basic Line												APAC Line	IE3	⑨
					1LE1643 Performance Line												⑩
									1LE1541 Basic Line							IE2	⑪
		1LE1523 Basic Line													Eagle Line	NPE (NEMA)	⑫
					1LE1623 Performance Line												⑬
1LE1 . . . - . . . . . - . . . . -Z	Order code				1LE1521 Basic Line											NEE (NEMA)	⑭
Special technology (continued)																	
Mounting of rotary pulse encoder HOG 10 DN 1024 I + ESL 93, (integrated electronic speed switch, speed .... rpm), terminal box dust protection	**Y79 •** and spec. speed (max 3) .... rpm	–	–	–	–	–	–	–	✓	✓	✓	✓	✓	✓			
Mechanical version and degrees of protection																	
Low-noise version for 2-pole motors with clockwise direction of rotation	**F77**	–	–	–	–	–	✓	✓	✓	✓	✓	✓	✓	✓			
Low-noise version for 2-pole motors with counterclockwise direction of rotation	**F78**	–	–	–	–	–	✓	✓	✓	✓	✓	✓	✓	✓			
Prepared for mounted components, centering hole only	**G40**	–	✓	✓	✓	✓	✓	✓	□	□	□	□	□	□			
Prepared for mountings with D12 shaft	**G41**	✓	✓	✓	✓	✓	✓	✓	✓	✓	✓	✓	✓	✓			
Prepared for mountings with D16 shaft	**G42**	–	✓	✓	✓	✓	✓	✓	✓	✓	✓	✓	✓	✓			
Mechanical protection for encoder	**G43**	✓	✓	✓	✓	✓	✓	✓	✓	✓	✓	✓	✓	✓			
Protective cover	**H00**	✓	✓	✓	✓	✓	✓	✓	✓	✓	✓	✓	✓	✓			
Screwed-on (instead of cast) feet	**H01**	–	–	–	✓	✓	✓	✓	✓	✓	✓	✓	✓	✓			
Vibration-proof version; vibration resistance to Class 3M4 according to IEC 60721-3-3:1994	**H02**	✓	✓	✓	✓	✓	✓	✓	✓	✓	✓	✓	✓	✓			
Condensation drainage holes	**H03**	✓	✓	✓	□	□	□	□	□	□	□	□	□	□			
Rust-resistant screws (externally)	**H07**	✓	✓	✓	✓	✓	✓	✓	✓	✓	✓	✓	✓	✓			
Degree of protection IP66	**H19**	✓	✓	✓	✓	✓	✓	✓	✓	✓	✓	✓	✓	✓			
Degree of protection IP65	**H20**	✓	✓	✓	✓	✓	✓	✓	✓	✓	✓	✓	✓	✓			
Degree of protection IP54	**H21**	–	–	–	–	–	–	–	✓	✓	✓	✓	✓	✓			
Degree of protection IP56	**H22**	✓	✓	✓	✓	✓	✓	✓	✓	✓	✓	✓	✓	✓			
Drive-end seal for flange-mounting motors, oil-tight to 0.1 bar	**H23**	✓	✓	✓	✓	✓	✓	✓	✓	✓	✓	✓	✓	✓			
Grounding brush for converter operation	**L52**	–	–	–	–	–	–	–	–	–	–	–	✓	✓			
Coolant temperature and installation altitude																	
Coolant temperature –50 to +40 °C	**D02**	–	–	–	✓	✓	✓	✓	✓	✓	✓	✓	✓	✓			
Coolant temperature –40 to +40 °C	**D03**	✓	✓	✓	✓	✓	✓	✓	✓	✓	✓	✓	✓	✓			
Coolant temperature –30 to +40 °C	**D04**	✓	✓	✓	✓	✓	✓	✓	✓	✓	✓	✓	✓	✓			
Versions in accordance with standards and specifications																	
VIK version	**C02**	–	–	–	✓	✓	✓	✓	✓	✓	✓	✓	✓	✓	Only for: Not for:	③, ④ ⑤	
Version Chemstar chemical industry	**C03**	✓	✓	✓	✓	✓	✓	✓	✓	✓	✓	✓	✓	✓			
Version Chemstar oil & gas industry	**C04**	✓	✓	✓	✓	✓	✓	✓	✓	✓	✓	✓	✓	✓			
CCC China Compulsory Certification	**D01**	✓	✓	✓	–	–	–	–	–	–	–	–	–	–	Only for: Not for:	Voltage code 21 or 22 ⑤	
Motor without CE marking for export outside EEA (see EU Directive 2019/1781)	**D22**	○	○	○	○	○	○	○	○	○	○	○	○	○	Not for:	①, ②	
Motor exclusively according to the Energy-related Products Law, Article 1 dated 27.2.2008, motor to be used in means of transport for persons and goods	**D23**	○	○	○	○	○	○	○	○	○	○	○	○	○	Only for:	⑥, ⑦, ⑧, ⑪	

For legends, see page 3/139.

© Innomotics 2024

Innomotics GP and Innomotics SD standard motors

Cast-iron series Innomotics SD 1LE15 Basic Line, 1LE16 Performance Line

Special versions	Additional identification code -Z with order code and plain text if required	Frame size	Motor version		
		71 80 90 100 112 132 160 180 200 225 250 280 315			
		1LE1504 Basic Line	IEC	IE4	①
		1LE1604 Performance Line			②
		1LE1503 Basic Line		IE3	③
		1LE1603 Performance Line			④
		1LE1583			⑤
		1LE1501 Basic Line		IE2	⑥
		1LE1601 Performance Line			⑦
		1LE1502 Basic Line		IE1	⑧
		1LE1543 Basic Line	APAC Line	IE3	⑨
		1LE1643 Performance Line			⑩
		1LE1541 Basic Line		IE2	⑪
		1LE1523 Basic Line	Eagle Line	NPE (NEMA)	⑫
		1LE1623 Performance Line			⑬
1LE1 . . . - . . . . . - . . . . -Z	Order code	1LE1521 Basic Line		NEE (NEMA)	⑭

		71	80	90	100	112	132	160	180	200	225	250	280	315		
Versions in accordance with standards and specifications (continued)																
Electrical according to NEMA MG1-12	**D30**	–	–	–	✓	✓	✓	✓	✓	✓	✓	✓	✓	✓	Not for:	⑫, ⑬, ⑭
	–	□	□	□	□	□	□	□	□	□	□	□	□	□	Only for:	⑫, ⑬, ⑭
Design according to UL with "Recognition Mark"	**D31**	–	✓	✓	✓	✓	✓	✓	✓	✓	✓	✓	✓	✓	Not for:	⑫, ⑬, ⑭
	–	□	□	□	□	□	□	□	□	□	□	□	□	□	Only for:	⑫, ⑬, ⑭
KEA Korea Energy Efficiency Label	**D33**	–	✓	✓	✓	✓	✓	✓	✓	✓	✓	✓	✓	✓	Only for:	⑨, ⑩, ⑪
		–	–	–	O. R.	O. R.	O. R.	O. R.	✓	✓	✓	O. R.	O. R.	O. R.	Only for:	⑤
China Energy Efficiency Label	**D34**	○	○	○	○	○	○	○	○	○	○	○	○	○	Not for:	⑥, ⑦, ⑧, ⑪, ⑭ and motors with increased power
		–	–	–	○	○	○	○	○	○	–	–	–	–	Only for:	⑤
Canadian regulations (CSA)	**D40**	✓	✓	✓	✓	✓	✓	✓	✓	✓	✓	✓	✓	✓	Not for:	⑫, ⑬, ⑭
	–	□	□	□	□	□	□	□	□	□	□	□	□	□	Only for:	⑫, ⑬, ⑭
NEMA Premium Efficient, North America version acc. to NEMA MG1, Table 12-12, incl. UL and CSA	**D41**	–	–	–	✓	✓	✓	✓	✓	✓	✓	✓	✓	✓	Only for:	⑤
TR CU product safety certificate EAC for Eurasian Customs Union	**D47**	✓	✓	✓	✓	✓	✓	✓	✓	✓	✓	✓	✓	✓		
MEPS Australia	**D70**	–	✓	✓	✓	✓	✓	✓	✓	✓	✓	✓	✓	✓	Only for:	③, ④, ⑤, ⑨, ⑩, ⑫, ⑬
BIS India (Indian standard IS 12615:2018)	**D72**	✓	✓	✓	✓	✓	✓	✓	✓	✓	✓	✓	✓	✓	Not for:	⑧ and 8-pole motors
SASO EER	**D73**	–	O. R.	O. R.	O. R.	O. R.	O. R.	O. R.	O. R.	O. R.	O. R.	O. R.	O. R.	O. R.	Only for:	②, ④, ⑤, ⑨, ⑩
UKCA-marking		□	□	□	□	□	□	□	□	□	□	□	□	□		
Bearings and lubrication																
Regreasing device with M10 × 1 grease nipple according to DIN 71412-A	**L19**	–	–	–	–	–	–	–	✓	✓	✓	✓	○	○	Only for:	①, ③, ⑤, ⑥, ⑧, ⑨, ⑪, ⑫, ⑭
		–	–	–	–	–	–	–	○	○	○	○	○	○	Only for:	②, ④, ⑦, ⑩, ⑬
Located bearing DE	**L20**	✓	✓	✓	✓	✓	✓	✓	✓	✓	✓	✓	✓	✓		
Located bearing NDE	**L21**	✓	✓	✓	✓	✓	✓	□	□	□	□	□	□	□		
Bearing design for increased cantilever forces	**L22**	✓	✓	✓	✓	✓	✓	✓	✓	✓	✓	✓	✓	✓	Not for:	②, ④, ⑦, ⑩, ⑬
		✓	✓	✓	□	□	□	□	✓	✓	✓	✓	✓	✓	Only for:	②, ④, ⑦, ⑩, ⑬
Regreasing device	**L23**	–	–	–	✓	✓	✓	✓	✓	✓	✓	✓	□	□	Not for:	②, ④, ⑦, ⑩, ⑬
		–	–	–	✓	✓	✓	□	□	□	□	□	□	□	Only for:	②, ④, ⑦, ⑩, ⑬
Bearings reinforced at both ends for DE and NDE, bearing size 63	**L25**	✓	✓	✓	✓	✓	✓	✓	✓	✓	✓	✓	□	□	Not for:	②, ④, ⑦, ⑩, ⑬
	–	–	–	–	□	□	□	□	□	□	□	□	□	□	Only for:	②, ④, ⑦, ⑩, ⑬
Reinforced bearings at both DE and NDE, DE bearing for increased cantilever forces	**L28**	–	–	–	–	–	–	–	✓	✓	✓	✓	–	–		
Bearings for high axial tension forces	**L34**	–	–	–	✓	✓	✓	✓	✓	✓	✓	✓	–	–		
Bearing insulation DE	**L50**	–	–	–	–	–	–	–	–	–	✓	✓	✓	✓		
Bearing insulation NDE	**L51**	–	–	–	✓	✓	✓	✓	✓	✓	✓	✓	✓	✓		
Measuring nipple for SPM shock pulse measurement for bearing inspection	**Q01**	–	–	–	✓	✓	✓	✓	✓	✓	✓	✓	✓	✓		
Motor design VSD, higher speed up to .... rpm, vibration level .. acc. IEC60034-14, with or w/o routine test	**Y37**	O. R.	O. R.	O. R.	O. R.	O. R.	O. R.	O. R.	O. R.	O. R.	O. R.	O. R.	O. R.	O. R.		
Balance and vibration severity																
Vibration severity grade A		□	□	□	□	□	□	□	□	□	□	□	□	□		
Vibration severity grade B	**L00**	✓	✓	✓	✓	✓	✓	✓	✓	✓	✓	✓	✓	✓		
Half-key balancing (standard)		□	□	□	□	□	□	□	□	□	□	□	□	□		
Balancing without feather key	**L01**	✓	✓	✓	✓	✓	✓	✓	✓	✓	✓	✓	✓	✓		
Full-key balancing	**L02**	✓	✓	✓	✓	✓	✓	✓	✓	✓	✓	✓	✓	✓		

For legends, see page 3/139.

© Innomotics 2024

Innomotics GP and Innomotics SD standard motors

Cast-iron series Innomotics SD 1LE15 Basic Line, 1LE16 Performance Line

Special versions	Additional identification code -Z with order code and plain text if required	Frame size													Motor version		
		71	80	90	100	112	132	160	180	200	225	250	280	315			
					1LE1504 Basic Line										IEC	IE4	①
					1LE1604 Performance Line												②
		1LE1503 Basic Line														IE3	③
					1LE1603 Performance Line												④
					1LE1583												⑤
		1LE1501 Basic Line														IE2	⑥
					1LE1601 Performance Line												⑦
					1LE1502 Basic Line											IE1	⑧
			1LE1543 Basic Line												APAC Line	IE3	⑨
					1LE1643 Performance Line												⑩
									1LE1541 Basic Line							IE2	⑪
		1LE1523 Basic Line													Eagle Line	NPE (NEMA)	⑫
					1LE1623 Performance Line												⑬
1LE1 . . . - . . . . . - . . . . -Z	Order code				1LE1521 Basic Line											NEE (NEMA)	⑭
Shaft and rotor																	
Shaft extension with standard dimensions, without feather keyway	**L04**	✓	✓	✓	✓	✓	✓	✓	✓	✓	✓	✓	✓	✓			
Standard, cylindrical shaft extension (second shaft extension) NDE acc. to EN 50347	**L05**	✓	✓	✓	✓	✓	✓	✓	✓	✓	✓	✓	✓	✓			
Standard shaft made of stainless steel (e.g. 1.4021)	**L06**	✓	✓	✓	✓	✓	✓	✓	✓	✓	✓	✓	✓	✓			
Shaft extension run-out in accordance with IEC 60072-1 precision class	**L07**	✓	✓	✓	✓	✓	✓	✓	✓	✓	✓	✓	✓	✓			
Shaft extension run-out, concentricity and perpendicularity in accordance with IEC 60072-1 precision class for flange-mounted motors	**L08**	✓	✓	✓	✓	✓	✓	✓	✓	✓	✓	✓	✓	✓			
Shaft and rotor (continued)																	
Non-standard cylindrical shaft extension, DE	**Y58** • and customer specifications	✓	✓	✓	✓	✓	✓	✓	✓	✓	✓	✓	✓	✓			
Non-standard cylindrical shaft extension, NDE	**Y59** • and customer specifications	✓	✓	✓	✓	✓	✓	✓	✓	✓	✓	✓	✓	✓			
Special shaft steel	**Y60** • and customer specifications	–	–	–	O.R.	O.R.	O.R.	O.R.	O.R.	O.R.	O.R.	O.R.	O.R.	O.R.			
Heating and ventilation																	
Sheet metal fan cover	**F74**	☐	☐	☐	✓	✓	✓	✓	✓	✓	✓	✓	✓	✓	Only for:	①, ③, ⑤, ⑥, ⑧, ⑨, ⑪, ⑫, ⑭	
	–	☐	☐	☐	☐	☐	☐	☐	☐	☐	☐	☐	☐	☐	Only for:	②, ④, ⑦, ⑩, ⑬	
Metal external fan	**F76**	✓	✓	✓	✓	✓	✓	✓	✓	✓	✓	✓	✓	✓			
Without external fan and without fan cover	**F90**	✓	✓	✓	✓	✓	✓	✓	✓	✓	✓	✓	✓	✓			
Anti-condensation heating for 230 V (2 terminals)	**Q02**	✓	✓	✓	✓	✓	✓	✓	✓	✓	✓	✓	✓	✓			
Anti-condensation heating for 115 V (2 terminals)	**Q03**	✓	✓	✓	✓	✓	✓	✓	✓	✓	✓	✓	✓	✓			
Separately driven fan with non-standard voltage and/or frequency	**Y81** • and customer specifications	–	–	–	–	–	–	–	–	–	✓	✓	✓	✓			
Rating plate and additional rating plates																	
Additional rating plate for voltage tolerance	**B07**	✓	✓	✓	✓	✓	✓	✓	✓	✓	✓	✓	✓	✓	Not for:	8-pole motors	
Second rating plate, loose	**M10**	✓	✓	✓	✓	✓	✓	✓	✓	✓	✓	✓	✓	✓			
Rating plate, stainless steel	**M11**	✓	✓	✓	✓	✓	✓	✓	✓	✓	✓	✓	✓	✓	Only for:	①, ③, ⑤, ⑥, ⑧, ⑨, ⑪, ⑫, ⑭	
	–	–	–	–	☐	☐	☐	☐	☐	☐	☐	☐	☐	☐	Only for:	②, ④, ⑦, ⑩, ⑬	
Additional rating plate with deviating rating plate data	**Y80** • and customer specifications	✓	✓	✓	✓	✓	✓	✓	✓	✓	✓	✓	✓	✓			
Additional rating plate with customer specifications	**Y82** • and customer specifications	✓	✓	✓	✓	✓	✓	✓	✓	✓	✓	✓	✓	✓			
Additional information on rating plate and on package label (max. 20 characters)	**Y84** • and customer specifications	✓	✓	✓	✓	✓	✓	✓	✓	✓	✓	✓	✓	✓			

© Innomotics 2024

Innomotics GP and Innomotics SD standard motors

Cast-iron series Innomotics SD 1LE15 Basic Line, 1LE16 Performance Line

Special versions	Additional identification code -Z with order code and plain text if required	Frame size													Motor version		
		71	80	90	100	112	132	160	180	200	225	250	280	315			
					1LE1504 Basic Line										IEC	IE4	①
					1LE1604 Performance Line												②
		1LE1503 Basic Line														IE3	③
					1LE1603 Performance Line												④
					1LE1583												⑤
		1LE1501 Basic Line														IE2	⑥
					1LE1601 Performance Line												⑦
					1LE1502 Basic Line											IE1	⑧
			1LE1543 Basic Line												APAC Line	IE3	⑨
					1LE1643 Performance Line												⑩
									1LE1541 Basic Line							IE2	⑪
		1LE1523 Basic Line													Eagle Line	NPE (NEMA)	⑫
					1LE1623 Performance Line												⑬
1LE1 . . . - . . . . . - . . . . -Z	Order code				1LE1521 Basic Line											NEE (NEMA)	⑭
Rating plate and additional rating plates (continued)																	
Adhesive label, supplied loose (printed with: Article No., Serial No.; 2 lines of text)	**Y85** • and customer specifications	–	–	–	✓	✓	✓	✓	✓	✓	✓	✓	✓	✓			
Extension of the liability for defects																	
Extension of the liability for defects by 12 months to a total of 24 months (2 years) from delivery	**Q80**	–	–	–	–	–	–	–	✓	✓	✓	✓	✓	✓	Only for:	①, ③, ⑤, ⑥, ⑧, ⑨, ⑪, ⑫, ⑭	
Extension of the liability for defects by 24 months to a total of 36 months (3 years) from delivery	**Q82**	–	–	–	–	–	–	–	✓	✓	✓	✓	✓	✓	Only for:	①, ③, ⑤, ⑥, ⑧, ⑨, ⑪, ⑫, ⑭	
	–	–	–	–	☐	☐	☐	☐	☐	☐	☐	☐	☐	☐	Only for:	②, ④, ⑦, ⑩, ⑬	
Packaging, safety notes, documentation and test certificates																	
Inspection certificate 3.1 according to EN 10204	**B02**	✓	✓	✓	✓	✓	✓	✓	✓	✓	✓	✓	✓	✓			
Document - Electrical datasheet	**B60**	✓	✓	✓	✓	✓	✓	✓	✓	✓	✓	✓	✓	✓			
Document - Order dimensional drawing	**B61**	✓	✓	✓	✓	✓	✓	✓	✓	✓	✓	✓	✓	✓			
Standard test (routine test) with acceptance	**B65**	–	–	–	✓	✓	✓	✓	✓	✓	✓	✓	✓	✓			
Remote acceptance	**B77**	–	–	–	–	–	–	–	–	–	✓	✓	✓	✓			
Hybrid acceptance	**B78**	–	–	–	–	–	–	–	–	–	✓	✓	✓	✓			
Type test with heat run for horizontal motors, without acceptance	**B82**	✓	✓	✓	✓	✓	✓	✓	✓	✓	✓	✓	✓	✓			
Type test with heat run for horizontal motors, with acceptance	**B83**	✓	✓	✓	✓	✓	✓	✓	✓	✓	✓	✓	✓	✓			
"Basic" documentation package	**B90**	✓	✓	✓	✓	✓	✓	✓	✓	✓	✓	✓	✓	✓			
"Advanced" documentation package	**B91**	✓	✓	✓	✓	✓	✓	✓	✓	✓	✓	✓	✓	✓			
"Projects" documentation package	**B92**	✓	✓	✓	✓	✓	✓	✓	✓	✓	✓	✓	✓	✓			

☐ Standard version
O Without additional charge
• This order code only determines the price of the version – Additional plain text is required.
✓ With additional charge
O. R. Possible on request
– Not possible

Note:
The catalog provides an overview of the available motor options but doesn't detail the correct logic combinations.
For a customized selection tailored to your specific requirements, please use the Siemens Product Configurator at the following address:configurator.innomotics.com

For legends, see page 3/145.

© Innomotics 2024

Innomotics GP and Innomotics SD standard motors

Aluminum series Innomotics GP 1LE1073 and cast-iron series Innomotics SD 1LE1573, 1LE5773

Selection and ordering data

Special versions	Additional identification code -Z with order code and plain text if required	Frame size 80	90	100	112	132	160	180	200	225	250	280	315	Motor version IEC	IE3
		1LE1073													
								1LE1573							
											1LE5773				
1LE1 . . . - . . . . . - . . . . -Z	Order code														
Motor protection															
1 or 3 PTC thermistors – for tripping (2 terminals)	**Q11**	✓	✓	✓	✓	✓	✓	✓	✓	✓	✓	✓	✓		
2 or 6 PTC thermistors – for alarm and tripping (4 terminals)	**Q12**	✓	✓	✓	✓	✓	✓	✓	✓	✓	✓	✓	✓		
3 bimetal sensors (NC contacts) for tripping (2 terminals)	**Q31**	✓	✓	✓	✓	✓	✓	✓	✓	✓	✓	✓	✓		
6 bimetal sensors (NC contacts) for alarm and tripping (4 terminals)	**Q32**	✓	✓	✓	✓	✓	✓	✓	✓	✓	✓	✓	✓		
3 bimetal sensors (NC contacts) for tripping (6 terminals)	**Q33**	–	–	–	–	–	–	✓	✓	✓	✓	✓	✓		
6 bimetal sensors (NC contacts) for alarm and tripping (12 terminals)	**Q34**	–	–	–	–	–	–	✓	✓	✓	✓	✓	✓		
1 Pt1000 resistance thermometer (2 terminals)	**Q35**	✓	✓	✓	✓	✓	✓	✓	✓	✓	✓	✓	✓		
2 Pt1000 resistance thermometer (4 terminals)	**Q36**	✓	✓	✓	✓	✓	✓	✓	✓	✓	✓	✓	✓		
3 Pt100 resistance thermometers (6 terminals)	**Q60**	–	–	–	–	–	–	✓	✓	✓	✓	✓	✓		
6 Pt100 resistance thermometers (12 terminals)	**Q61**	–	–	–	–	–	–	✓	✓	✓	✓	✓	✓		
1 Pt100 resistance thermometer (2 terminals)	**Q62**	–	–	–	–	–	–	✓	✓	✓	✓	✓	✓		
3 Pt100 resistance thermometers (9 terminals)	**Q63**	–	–	–	–	–	–	✓	✓	✓	✓	✓	✓		
6 Pt100 resistance thermometers (18 terminals)	**Q64**	–	–	–	–	–	–	✓	✓	✓	✓	✓	✓		
2 Pt100 resistance thermometers in basic configuration for bearing (4 terminals)	**Q72**	–	–	–	–	–	–	✓	✓	✓	✓	✓	✓		
2 Pt100 resistance thermometers for bearing (6 terminals)	**Q78**	–	–	–	–	–	–	✓	✓	✓	✓	✓	✓		
2 Pt100 double resistance thermometers for bearing (12 terminals)	**Q79**	–	–	–	–	–	–	✓	✓	✓	✓	✓	✓		
Motor connection and terminal box															
External grounding	**H04**	✓	✓	✓	✓	✓	✓	☐	☐	☐	☐	☐	☐		
Terminal box on NDE	**H08**	O. R.	O. R.	O. R.	O. R.	O. R.	O. R.	O. R.	O. R.	✓	✓	✓	✓		
Second external grounding	**H70**	–	–	–	–	–	–	✓	✓	✓	✓	✓	✓		
Connected in star for dispatch	**M01**	✓	✓	✓	✓	✓	✓	✓	✓	✓	✓	✓	✓		
Connected in delta for dispatch	**M02**	✓	✓	✓	✓	✓	✓	✓	✓	✓	✓	✓	✓		
Rotation of the terminal box through 90°, entry from DE	**R10**	○	○	○	○	○	○	✓	✓	✓	✓	✓	✓		
Rotation of the terminal box through 90°, entry from NDE	**R11**	○	○	○	○	○	○	✓	✓	✓	✓	✓	✓		
Rotation of the terminal box through 180°	**R12**	○	○	○	○	○	○	✓	✓	✓	✓	✓	✓		
One EMC cable gland	**R14**	✓	✓	✓	✓	✓	✓	✓	✓	✓	✓	✓	✓		
One metal cable gland	**R15**	✓	✓	✓	✓	✓	✓	✓	✓	✓	✓	✓	✓		
EMC cable gland, maximum configuration	**R16**	✓	✓	✓	✓	✓	✓	✓	✓	✓	✓	✓	✓		
Stud terminal for cable connection, accessories pack (3 items)	**R17**	–	–	–	–	–	–	–	–	–	✓	✓	✓		
Metal cable gland, maximum configuration	**R18**	✓	✓	✓	✓	✓	✓	✓	✓	✓	✓	✓	✓		
Saddle terminal for connection without cable lug, accessories pack	**R19**	–	–	–	–	–	–	–	–	–	✓	✓	✓		
3 cables protruding, 0.5 m long	**R20**	✓	✓	✓	✓	✓	✓	✓	–	–	–	–	–		
3 cables protruding, 1.5 m long	**R21**	✓	✓	✓	✓	✓	✓	O. R.	O. R.	O. R.	O. R.	O. R.	O. R.		
6 cables protruding, 0.5 m long	**R22**	✓	✓	✓	✓	✓	✓	✓	–	–	–	–	–		
6 cables protruding, 1.5 m long	**R23**	✓	✓	✓	✓	✓	✓	O. R.	O. R.	O. R.	O. R.	O. R.	O. R.		
6 cables protruding, 3 m long	**R24**	✓	✓	✓	✓	✓	✓	O. R.	O. R.	O. R.	O. R.	O. R.	O. R.		
12 cables protruding with cable lugs		☐	☐	☐	☐	☐	☐	☐	☐	☐	☐	☐	☐		

For legends, see page 3/145.

© Innomotics 2024

Innomotics GP and Innomotics SD standard motors

Aluminum series Innomotics GP 1LE1073 and cast-iron series Innomotics SD 1LE1573, 1LE5773

Special versions	Additional identification code -Z with order code and plain text if required	Frame size 80	90	100	112	132	160	180	200	225	250	280	315	Motor version IEC	IE3
		1LE1073													
								1LE1573							
											1LE5773				
1LE1 . . . - . . . . . - . . . . -Z	Order code														
Motor connection and terminal box (continued)															
Larger terminal box	**R50**	✓	✓	✓	✓	✓	✓	✓	✓	✓	✓	✓	✓		
Terminal box without cable entry opening	**R51**	–	–	–	–	–	–	○	○	○	○	○	○		
Drilled removable entry plate	**R52**	–	–	–	–	–	–	✓	✓	✓	✓	✓	✓		
Undrilled removable entry plate	**R53**	–	–	–	–	–	–	✓	✓	✓	✓	✓	✓		
Cast-iron auxiliary terminal box (small)	**R62**	–	–	–	–	–	✓	✓	✓	✓	✓	✓	✓		
Cast-iron auxiliary terminal box (large)	**R63**	–	–	–	–	–	–	–	–	–	–	–	✓		
2 small cast-iron auxiliary terminal boxes	**R67**	–	–	–	–	–	–	✓	✓	✓	✓	✓	✓		
Version with reduced silicon amount according to VDMA 24364-C1/T70	**R77**	✓	✓	✓	✓	✓	✓	✓	✓	✓	✓	✓	✓		
Non-standard threaded through hole (metric, NPT or G thread)	**Y61 •** and customer specifications	–	–	–	–	–	–	✓	✓	✓	✓	✓	✓		
Windings and insulation															
Temperature class 155 (F), utilized according to 155 (F), with service factor	**N01**	✓	✓	✓	✓	✓	✓	✓	✓	✓	✓	✓	✓		
Temperature class 155 (F), utilized acc. to 155 (F), with increased power	**N02**	✓	✓	✓	✓	✓	✓	✓	✓	✓	✓	✓	✓		
Temperature class 155 (F), utilized acc. to 155 (F), with increased coolant temperature	**N03**	✓	✓	✓	✓	✓	✓	✓	✓	✓	✓	✓	✓		
Temperature class 155 (F), utilized acc. to 130 (B), coolant temperature 45 °C, derating approx. 4 %	**N05**	✓	✓	✓	✓	✓	✓	✓	✓	✓	✓	✓	✓		
Temperature class 155 (F), utilized acc. to 130 (B), coolant temperature 50 °C, derating approx. 8 %	**N06**	✓	✓	✓	✓	✓	✓	✓	✓	✓	✓	✓	✓		
Temperature class 155 (F), utilized acc. to 130 (B), coolant temperature 55 °C, derating approx. 13 %	**N07**	✓	✓	✓	✓	✓	✓	✓	✓	✓	✓	✓	✓		
Temperature class 155 (F), utilized acc. to 130 (B), coolant temperature 60 °C, derating approx. 18 %	**N08**	✓	✓	✓	✓	✓	✓	✓	✓	✓	✓	✓	✓		
Temperature class 180 (H)	**N10**	O. R.	O. R.	O. R.	O. R.	O. R.	O. R.	O. R.	O. R.	✓	✓	✓	✓		
Temperature class 180 (H) at rated power and max. CT 60 °C	**N11**	✓	✓	✓	✓	✓	✓	✓	✓	✓	✓	✓	✓		
Increased air humidity/temperature with 30 to 60 g water per m^3 of air	**N30**	✓	✓	✓	✓	✓	✓	✓	✓	✓	✓	✓	✓		
Increased air humidity/temperature with 60 to 100 g water per m^3 of air	**N31**	✓	✓	✓	✓	✓	✓	✓	✓	✓	✓	✓	✓		
Temperature class 155 (F), utilized acc. to 130 (B), with higher coolant temperature and/or installation altitude	**Y50 •** CT .. °C or IA .... m above sea level	–	–	✓	✓	✓	✓	✓	✓	✓	✓	✓	✓		
Temperature class 155 (F), utilized acc. to 155 (F), other requirements	**Y52 •** CT .. °C or IA .... m above sea level	✓	✓	✓	✓	✓	✓	✓	✓	✓	✓	✓	✓		
Temperature class 180 (H), utilized according to 155 (F)	**Y75 •** CT .. °C or IA .... m above sea level	–	–	O. R.	O. R.	O. R.	O. R.	✓	✓	✓	✓	✓	✓		
Unpainted (only cast-iron parts primed)	**S00**	○	○	○	○	○	○	○	○	○	○	○	○		
Unpainted, only primed	**S01**	✓	✓	✓	✓	✓	✓	✓	✓	✓	✓	✓	✓		
Special paint finish C3	**S02**	□	□	□	□	□	□	□	□	□	□	□	□		
Special paint finish sea air resistant C4	**S03**	✓	✓	✓	✓	✓	✓	✓	✓	✓	✓	✓	✓		
Special paint finish for use offshore C5	**S04**	–	–	–	–	–	–	✓	✓	✓	✓	✓	✓		
Internal coating	**S05**	✓	✓	✓	✓	✓	✓	✓	✓	✓	✓	✓	✓		
Top coat polyurethane	**S06**	✓	✓	✓	✓	✓	✓	✓	✓	✓	✓	✓	✓		
C5mid Special paint system with durability "medium"	**S08**	–	–	–	–	–	–	✓	✓	✓	✓	✓	✓		
CX Special paint system for offshore with durability "high"	**S09**	–	–	–	–	–	–	✓	✓	✓	✓	✓	✓		

For legends, see page 3/145.

© Innomotics 2024

Innomotics GP and Innomotics SD standard motors

Aluminum series Innomotics GP 1LE1073 and cast-iron series Innomotics SD 1LE1573, 1LE5773

Special versions	Additional identification code -Z with order code and plain text if required	Frame size												Motor version	
		80	90	100	112	132	160	180	200	225	250	280	315		
		1LE1073												IEC	IE3
								1LE1573							
											1LE5773				
1LE1 . . . - . . . . . - . . . . -Z	Order code														
Colors and paint finish (continued)															
Paint finish in other standard RAL colors: RAL 1015, 3000, 5002, 5009, 5010, 5012, 5015, 6011, 7001, 7011, 7016, 7031, 7032, 7035, 7037, 8012, 9005, 9010 (see Catalog Section 1 "Introduction")	**Y53 •** and paint finish RAL....	✓	✓	✓	✓	✓	✓	✓	✓	✓	✓	✓	✓		
Paint finish in special RAL colors: For RAL colors, see "Special paint finish in special RAL colors" (see Catalog Section 1 "Introduction")	**Y56 •** and paint finish RAL....	✓	✓	✓	✓	✓	✓	✓	✓	✓	✓	✓	✓		
Non-standard colors Colors see "Paint finish in non-standard colors" (see Catalog Section 1 "Introduction")	**Y66 •** and paint finish	✓	✓	✓	✓	✓	✓	✓	✓	✓	✓	✓	✓		
Modular technology – Basic versions															
Mounting of holding brake (standard assignment)	**F01**	✓	✓	✓	✓	✓	✓	✓	✓	✓	✓	✓	✓		
Mounting of PRECIMA brake	**F04**	–	–	✓	✓	✓	✓	✓	✓	✓	✓	✓	–		
Mounting of separately driven fan	**F70**	✓	✓	✓	✓	✓	✓	✓	✓	✓	✓	✓	✓		
Mounting of Kübler Sendix 5020 HTL, 1024 I rotary pulse encoder	**G11**	✓	✓	✓	✓	✓	✓	✓	✓	✓	✓	✓	✓		
Mounting of Kübler Sendix 5020 TTL, 1024 I rotary pulse encoder	**G12**	✓	✓	✓	✓	✓	✓	✓	✓	✓	✓	✓	✓		
Modular technology – Additional versions															
Brake supply voltage 24 V DC	**F10**	✓	✓	✓	✓	✓	✓	✓	✓	✓	✓	✓	✓		
Brake supply voltage 230 V AC, 50/60 Hz	**F11**	✓	✓	O	O	O	O	O	O	O	O	O	O		
Brake supply voltage 400 V AC, 50/60 Hz	**F12**	✓	✓	✓	✓	✓	✓	✓	✓	✓	✓	✓	✓		
Brake supply voltage 180 V DC	**F17**	✓	✓	✓	✓	✓	✓	✓	✓	✓	–	–	–		
Brake supply voltage 205 V DC	**F18**	✓	✓	✓	✓	✓	✓	✓	✓	✓	–	–	–		
Backstop, counterclockwise motion blocked, clockwise direction of rotation	**F40**	–	–	–	–	✓	✓	✓	✓	✓	✓	✓	✓		
Backstop, clockwise motion blocked, counterclockwise direction of rotation	**F41**	–	–	–	–	–	–	✓	✓	✓	✓	✓	✓		
Mechanical manual brake release with lever (no locking)	**F50**	✓	✓	✓	✓	✓	✓	✓	✓	✓	✓	✓	–		
Special technology															
Mounting of HOG 86E rotary pulse encoder	**G03**	–	–	✓	✓	✓	✓	✓	✓	✓	✓	✓	✓		
Mounting of LL 861 900 220 rotary pulse encoder	**G04**	–	–	✓	✓	✓	✓	✓	✓	✓	✓	✓	✓		
Mounting of HOG 9 DN 1024 I rotary pulse encoder	**G05**	–	–	✓	✓	✓	✓	✓	✓	✓	✓	✓	✓		
Mounting of HOG 10 D 1024 I rotary pulse encoder	**G06**	–	–	✓	✓	✓	✓	✓	✓	✓	✓	✓	✓		
Mounting of POG 10 DN rotary pulse encoder (only in combination with separately driven fan or brake)	**G07**	–	–	–	–	–	–	✓	✓	✓	✓	✓	✓		
Mounting of POG 9 rotary pulse encoder (only in combination with separately driven fan or brake)	**G08**	–	–	–	–	–	–	✓	✓	✓	✓	✓	✓		
Mounting of HOG 10 DN 1024 I rotary pulse encoder, terminal box moisture protection	**G15**	–	–	–	–	–	–	✓	✓	✓	✓	✓	✓		
Mounting of HOG 10 DN 1024 I rotary pulse encoder, terminal box dust protection	**G16**	–	–	–	–	–	–	✓	✓	✓	✓	✓	✓		
Mounting of Kübler Sendix 5834FS2 1024, SIL-2 rotary pulse encoder	**G21**	✓	✓	✓	✓	✓	✓	✓	✓	✓	✓	✓	✓		
Mounting of Kübler Sendix 5834FS3 1024, SIL-3 rotary pulse encoder	**G22**	✓	✓	✓	✓	✓	✓	✓	✓	✓	✓	✓	✓		
Mounting of HOG 100S–B76.626.01024.1 rotary pulse encoder	**G25**	–	–	–	–	–	–	✓	✓	✓	✓	✓	✓		
Mounting of LL FSI 862-184560-1024, SIL-2 rotary pulse encoder	**G27**	–	–	–	–	–	–	✓	✓	✓	✓	✓	✓		
Mounting of rotary pulse encoder XSI 850 Overspeed	**G93**							✓	✓	✓	✓	✓	✓		
Mounting of rotary pulse encoder XHI 861 Overspeed	**G94**							✓	✓	✓	✓	✓	✓		

For legends, see page 3/145.

© Innomotics 2024

Innomotics GP and Innomotics SD standard motors

Aluminum series Innomotics GP 1LE1073 and cast-iron series Innomotics SD 1LE1573, 1LE5773

Special versions	Additional identification code -Z with order code and plain text if required	Frame size 80	90	100	112	132	160	180	200	225	250	280	315	Motor version IEC	IE3
		1LE1073													
								1LE1573							
											1LE5773				
1LE1 . . . - . . . . . - . . . . -Z	Order code														
Special technology (continued)															
Mounting of rotary pulse encoder HOG 10 DN 1024 I + FSL, (integrated centrifugal switch, speed ... rpm), terminal box moisture protection	**Y74 •** and spec. speed .... rpm	–	–	–	–	–	–	✓	✓	✓	✓	✓	✓		
Mounting of rotary pulse encoder HOG 10 DN 1024 I + FSL, (integrated centrifugal switch, speed .... rpm), terminal box dust protection	**Y76 •** and spec. speed .... rpm	–	–	–	–	–	–	✓	✓	✓	✓	✓	✓		
Mounting of rotary pulse encoder HOG 10 DN 1024 I + ESL 93, (integrated electronic speed switch, speed .... rpm), terminal box dust protection	**Y79 •** and spec. speed (max 3) .... rpm	–	–	–	–	–	–	✓	✓	✓	✓	✓	✓		
Mechanical version and degrees of protection															
Low-noise version for 2-pole motors with clockwise direction of rotation	**F77**	–	–	–	–	✓	✓	✓	✓	✓	✓	✓	✓		
Low-noise version for 2-pole motors with counterclockwise direction of rotation	**F78**	–	–	–	–	✓	✓	✓	✓	✓	✓	✓	✓		
Prepared for mounted components, centering hole only	**G40**	✓	✓	✓	✓	✓	✓	☐	☐	☐	☐	☐	☐		
Prepared for mountings with D12 shaft	**G41**	✓	✓	✓	✓	✓	✓	✓	✓	✓	✓	✓	✓		
Prepared for mountings with D16 shaft	**G42**	✓	✓	✓	✓	✓	✓	✓	✓	✓	✓	✓	✓		
Mechanical protection for encoder	**G43**	✓	✓	✓	✓	✓	✓	✓	✓	✓	✓	✓	✓		
Protective cover	**H00**	✓	✓	✓	✓	✓	✓	✓	✓	✓	✓	✓	✓		
Screwed-on (instead of cast) feet	**H01**	☐	☐	☐	☐	☐	☐	☐	☐	☐	☐	☐	–		
Vibration-proof version; vibration resistance to Class 3M4 according to IEC 60721-3-3:1994	**H02**	✓	✓	✓	✓	✓	✓	✓	✓	✓	✓	✓	✓		
Condensation drainage holes	**H03**	✓	✓	✓	✓	✓	✓	☐	☐	☐	☐	☐	☐		
Rust-resistant screws (externally)	**H07**	✓	✓	✓	✓	✓	✓	✓	✓	✓	✓	✓	✓		
Degree of protection IP66	**H19**	✓	✓	✓	✓	✓	✓	✓	✓	✓	✓	✓	✓		
Degree of protection IP56	**H22**	✓	✓	✓	✓	✓	✓	✓	✓	✓	✓	✓	✓		
Drive-end seal for flange-mounting motors, oil-tight to 0.1 bar	**H23**	✓	✓	✓	✓	✓	✓	✓	✓	✓	✓	✓	✓		
Grounding brush for converter operation	**L52**	–	–	–	–	–	–	–	–	–	–	✓	✓		
Coolant temperature and installation altitude															
Coolant temperature –50 to +40 °C	**D02**	–	–	–	–	–	–	✓	✓	✓	✓	✓	✓		
Coolant temperature –40 to +40 °C	**D03**	✓	✓	✓	✓	✓	✓	✓	✓	✓	✓	✓	✓		
Coolant temperature –30 to +40 °C	**D04**	✓	✓	✓	✓	✓	✓	✓	✓	✓	✓	✓	✓		
Bearings and lubrication															
Regreasing device with M10 × 1 grease nipple according to DIN 71412-A	**L19**	–	–	–	–	–	–	✓	✓	✓	✓	○	○		
Located bearing DE	**L20**	✓	✓	✓	✓	✓	✓	✓	✓	✓	✓	✓	✓		
Located bearing NDE	**L21**	✓	✓	✓	✓	✓	☐	☐	☐	☐	☐	☐	☐		
Bearing design for increased cantilever forces	**L22**	✓	✓	✓	✓	✓	✓	✓	✓	✓	✓	✓	✓		
Regreasing device	**L23**	–	–	✓	✓	✓	✓	✓	✓	✓	✓	☐	☐		
Bearings reinforced at both ends for DE and NDE, bearing size 63	**L25**	✓	✓	✓	✓	✓	✓	✓	✓	✓	✓	☐	☐		
Reinforced bearings at both DE and NDE, DE bearing for increased cantilever forces	**L28**	–	–	–	–	–	–	✓	✓	✓	✓	–	–		
Bearings for high axial tension forces	**L34**	–	–	✓	✓	✓	✓	✓	✓	✓	✓	–	–		
Bearing insulation DE	**L50**	–	–	–	–	–	–	–	–	✓	✓	✓	✓		
Bearing insulation NDE	**L51**	–	–	✓	✓	✓	✓	✓	✓	✓	✓	✓	✓		
Measuring nipple for SPM shock pulse measurement for bearing inspection	**Q01**	–	–	✓	✓	✓	✓	✓	✓	✓	✓	✓	✓		
Balance and vibration severity															
Vibration severity grade A		☐	☐	☐	☐	☐	☐	☐	☐	☐	☐	☐	☐		
Vibration severity grade B	**L00**	✓	✓	✓	✓	✓	✓	✓	✓	✓	✓	✓	✓		
Half-key balancing (standard)		☐	☐	☐	☐	☐	☐	☐	☐	☐	☐	☐	☐		
Balancing without feather key	**L01**	✓	✓	✓	✓	✓	✓	✓	✓	✓	✓	✓	✓		
Full-key balancing	**L02**	✓	✓	✓	✓	✓	✓	✓	✓	✓	✓	✓	✓		

For legends, see page 3/145.

© Innomotics 2024

Innomotics GP and Innomotics SD standard motors

Aluminum series Innomotics GP 1LE1073 and cast-iron series Innomotics SD 1LE1573, 1LE5773

Special versions	Additional identification code -Z with order code and plain text if required	Frame size												Motor version	
		80	90	100	112	132	160	180	200	225	250	280	315		
		1LE1073												IEC	IE3
								1LE1573							
											1LE5773				
1LE1 . . . - . . . . . - . . . . -Z	Order code														
Shaft and rotor															
Shaft extension with standard dimensions, without feather keyway	**L04**	✓	✓	✓	✓	✓	✓	✓	✓	✓	✓	✓	✓		
Standard, cylindrical shaft extension (second shaft extension) NDE acc. to EN 50347	**L05**	✓	✓	✓	✓	✓	✓	✓	✓	✓	✓	✓	✓		
Standard shaft made of stainless steel (e.g. 1.4021)	**L06**	✓	✓	✓	✓	✓	✓	✓	✓	✓	✓	✓	✓		
Shaft extension run-out in accordance with IEC 60072-1 precision class	**L07**	✓	✓	✓	✓	✓	✓	✓	✓	✓	✓	✓	✓		
Shaft extension run-out, concentricity and perpendicularity in accordance with IEC 60072-1 precision class for flange-mounted motors	**L08**	✓	✓	✓	✓	✓	✓	✓	✓	✓	✓	✓	✓		
Non-standard cylindrical shaft extension, DE	**Y58 •** and customer specifications	✓	✓	✓	✓	✓	✓	✓	✓	✓	✓	✓	✓		
Non-standard cylindrical shaft extension, NDE	**Y59 •** and customer specifications	✓	✓	✓	✓	✓	✓	✓	✓	✓	✓	✓	✓		
Special shaft steel	**Y60 •** and customer specifications	–	–	–	–	–	–	O. R.	O. R.	O. R.	O. R.	O. R.	O. R.		
Heating and ventilation															
Sheet metal fan cover	**F74**	✓	✓	✓	✓	✓	✓	✓	✓	✓	✓	✓	✓		
Metal external fan	**F76**	✓	✓	✓	✓	✓	✓	✓	✓	✓	✓	✓	–		
Without external fan and without fan cover	**F90**	✓	✓	✓	✓	✓	✓	✓	✓	✓	✓	✓	✓		
Anti-condensation heating for 230 V (2 terminals)	**Q02**	✓	✓	✓	✓	✓	✓	✓	✓	✓	✓	✓	✓		
Anti-condensation heating for 115 V (2 terminals)	**Q03**	✓	✓	✓	✓	✓	✓	✓	✓	✓	✓	✓	✓		
Separately driven fan with non-standard voltage and/or frequency	**Y81 •** and customer specifications	–	–	–	–	–	–	–	–	✓	✓	✓	✓		
Rating plate and additional rating plates															
Second rating plate, loose	**M10**	✓	✓	✓	✓	✓	✓	✓	✓	✓	✓	✓	✓		
Rating plate, stainless steel	**M11**	☐	☐	☐	☐	☐	☐	☐	☐	☐	☐	☐	☐		
Additional rating plate with deviating rating plate data	**Y80 •** and customer specifications	✓	✓	✓	✓	✓	✓	✓	✓	✓	✓	✓	✓		
Additional rating plate with customer specifications	**Y82 •** and customer specifications	✓	✓	✓	✓	✓	✓	✓	✓	✓	✓	✓	✓		
Additional information on rating plate and on package label (max. 20 characters)	**Y84 •** and customer specifications	✓	✓	✓	✓	✓	✓	✓	✓	✓	✓	✓	✓		
Adhesive label, supplied loose (printed with: Article No., Serial No.; 2 lines of text)	**Y85 •** and customer specifications	–	–	✓	✓	✓	✓	✓	✓	✓	✓	✓	✓		
Packaging, safety notes, documentation and test certificates															
Inspection certificate 3.1 according to EN 10204	**B02**	✓	✓	✓	✓	✓	✓	✓	✓	✓	✓	✓	✓		
Document - Electrical datasheet	**B60**	✓	✓	✓	✓	✓	✓	✓	✓	✓	✓	✓	✓		
Document - Order dimensional drawing	**B61**	✓	✓	✓	✓	✓	✓	✓	✓	✓	✓	✓	✓		
Standard test (routine test) with acceptance	**B65**	–	–	✓	✓	✓	✓	✓	✓	✓	✓	✓	✓		

© Innomotics 2024

Innomotics GP and Innomotics SD standard motors

Aluminum series Innomotics GP 1LE1073 and cast-iron series Innomotics SD 1LE1573, 1LE5773

Special versions	Additional identification code **-Z** with order code and plain text if required	Frame size												Motor version	
		80	**90**	**100**	**112**	**132**	**160**	**180**	**200**	**225**	**250**	**280**	**315**		
		1LE1073												IEC	IE3
								1LE1573							
											1LE5773				
1LE1 . . . - . . . . . - . . . . -Z	Order code														
Packaging, safety notes, documentation and test certificates (continued)															
Remote acceptance	**B77**	–	–	–	–	–	–	–	–	✓	✓	✓	✓		
Hybrid acceptance	**B78**	–	–	–	–	–	–	–	–	✓	✓	✓	✓		
Type test with heat run for horizontal motors, without acceptance	**B82**	✓	✓	✓	✓	✓	✓	✓	✓	✓	✓	✓	✓		
Type test with heat run for horizontal motors, with acceptance	**B83**	✓	✓	✓	✓	✓	✓	✓	✓	✓	✓	✓	✓		

☐ Standard version
O Without additional charge
• This order code only determines the price of the version – Additional plain text is required.
✓ With additional charge
O. R. Possible on request
– Not possible

Note:
The catalog provides an overview of the available motor options but doesn't detail the correct logic combinations.
For a customized selection tailored to your specific requirements, please use the Siemens Product Configurator at the following address: configurator.innomotics.com

© Innomotics 2024

Overview

Couplings

The motor from Innomotics is connected to the machine or gear unit through a coupling. Flender is an important coupling manufacturer with a wide range of products.

For standard applications, Innomotics recommends that flexible couplings, types N-EUPEX and RUPEX or torsionally rigid couplings, types ARPEX and ZAPEX are used. For special applications, FLUDEX and ELPEX-S couplings are recommended.

Available from:

Siemens contact partner – ordering from catalog Siemens MD 10.1 "FLENDER Standard Couplings"

or

Flender GmbH
Kupplungswerk Mussum
Industriepark Bocholt
Schlavenhorst 100
46395 Bocholt, Germany
Phone +49 (2871) 922185
Fax +49 (2871) 922579

www.flender.com

Taper pins according to DIN 258 with threaded ends and constant taper lengths

Taper pins are used for components that are repeatedly removed. The drilled hole is conically ground using a conical reamer until the pin can be pushed in by hand until the cone shoulder lies approx. 3 to 4 mm above the rim of the hole.

It can then be driven in using a hammer until it is correctly seated. The pin is removed from the drilled hole by screwing on the nut and tightening it.

Standardized taper pins are commercially available.

For instance, available from:

Otto Roth GmbH & Co. KG
Rutesheimer Strasse 22
70499 Stuttgart, Germany
Phone +49 (711) 1388-0
Fax +49 (711) 1388-233

www.ottoroth.de
Email: info@ottoroth.de

Foundation block according to DIN 799

The foundation blocks are inserted into the stone foundation and embedded in concrete. They are used for fixing machines of medium size, slide rails, pedestal bearings, base frames, etc. After the fixing bolts have been unscrewed, the machines can be shifted without them having to be lifted.

When the machine is initially installed, the foundation block that is bolted to the machine (without washers) and fitted with taper pins is not embedded with concrete until the machine has been fully aligned. In this case, the machine is positioned 2 to 3 mm lower. The difference in shaft height is compensated by inserting shims on final installation. The taper pins safeguard the exact position of the machine when it is repeatedly removed and replaced without the need for realignment.

Available from:

Lütgert & Co. GmbH
Postfach 42 51
33276 Gütersloh, Germany
Phone +49 (5241) 7407-0
Fax +49 (5241) 7407-90

www.luetgert-antriebe.de
Email: info@luetgert-antriebe.de

Slide rails with fixing bolts and tensioning screws according to DIN 42923

Slide rails are used to tension the belt of a machine easily and conveniently when there is no belt-tensioning pulley. They are fixed to the base using stone bolts or foundation blocks.

The assignment of slide rails to motor size can be found in DIN 42923.
For motors of frame sizes 355 to 450, there are no standardized slide rails (please inquire).

Available from:

Lütgert & Co. GmbH
Postfach 42 51
33276 Gütersloh, Germany
Phone +49 (5241) 7407-0
Fax +49 (5241) 7407-90

www.luetgert-antriebe.de
Email: info@luetgert-antriebe.de

© Innomotics 2024

More information

Replacement motors and repair parts

- Commitment to provide replacement motors and repair parts following delivery of the motor:
  - For up to 3 years after delivery of the original motor, in the event of total motor failure, Innomotics will supply a comparable replacement motor with regard to the mounting dimensions and functions (the type series may vary).
  - If a replacement motor is supplied within the 3-year period, this does not mean that the warranty restarts.
  - Replacement motors delivered after the active production of the machine series are also identified as spare motors on the rating plate.
  - Spare parts are offered only for these spare motors onrequest; repair and replacement are not possible.
  - After a period of 3 years (after the delivery of the original motor), it is only possible to repair these motors (depending on the availability of the spare parts required).
  - For up to 5 years after the delivery of the original motor, spare parts will be available and for a further 5 years, Innomotics will provide information about spare parts and will supply documents when required.
- When repair parts are ordered, the following details must be provided:
  - Designation and part number
  - Article No. and factory number of the motor.

  Example for ordering a fan cover 1LE1003, frame size 112 M, 4-pole:
  Fan cover No. 7.40,
  1LE1003-1BB23-4AA4-Z, part No. E1001/5236197_01_001
- For bearing types, see Catalog Section 1 "Introduction".
- Repair parts for 1MJ6, 1MJ7, 1MJ8, 1MJ1, 1ME8, 1ML8 motors are available on request.
- For standard components, a commitment to supply repaired parts does not apply.

You will find telephone numbers for other countries on our Internet site:
innomotics.com/hub/en/customer-service

© Innomotics 2024

Innomotics GP and Innomotics SD standard motors

Notes on the dimensions

Overview

- Dimension designations according to EN 50347 and IEC 60072.
- Fits
  The shaft extensions specified in the dimension tables (DIN 748) and centering spigot diameters (EN 50347) are machined with the following fits:

Dimension designation	ISO fit DIN ISO 286-2	
D, DA	to 30 over 30 to 50 over 50	j6 k6 m6
N	to 250 over 250	j6 h6
F, FA		h9
S	flange (FF)H17	H17

  The drilled holes of couplings and belt pulleys should have an ISO fit of at least H7.
  Dimension K: nominal dimension according IEC 60072-1, negative deviation of tolerance H17 possible

- Dimensional tolerances
  For the following dimensions, the admissible deviations are given below:

Dimension	Dimension	Admissible deviation
H	to 250 over 250	– 0.5 – 1.0
E, EA		– 0.5

  Keyways and feather keyways (dimensions GA, GC, F, and FA) are made in compliance with DIN 6885 Part 1.
- All dimensions are specified in mm.
- The overall width of the motor is identical to the "AC" dimension.

© Innomotics 2024

Overview

A dimensional drawing can be created in the "Siemens Product Configurator" for every configurable motor.
A dimensional drawing can be requested for every other motor.

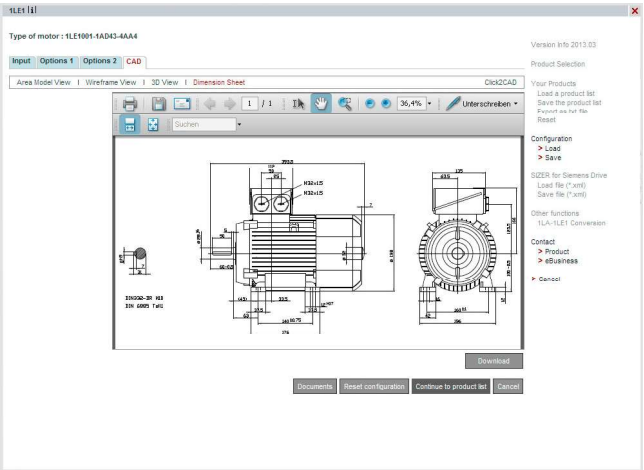

When a complete Article No. is entered with or without order codes, a dimensional drawing can be called up under the "Documentation" tab.

These dimensional drawings can be presented in different views and sections and printed.
The corresponding dimension sheets can be exported, saved and processed further in DXF format (interchange/import format for CAD systems) or as bitmap graphics.

Online access in the Siemens Industry Mall

The SPC is integrated into the can be used on the Internet.
configurator.innomotics.com

3

© Innomotics 2024

Innomotics GP and Innomotics SD standard motors

IE4 – self-ventilated · Frame sizes 100 L to 200 L

Dimensional drawings

Type of construction IM B3

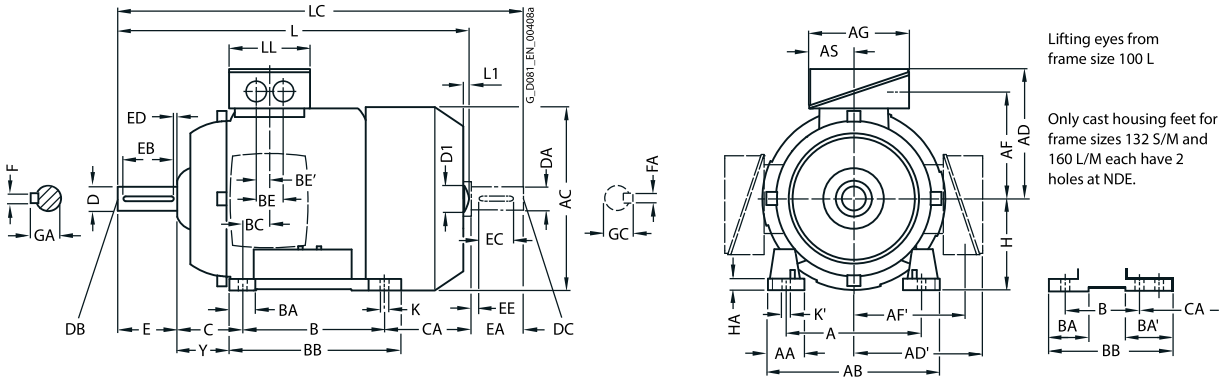

Types of construction IM B5 and IM V1

For flange dimensions, see page 1/59 (**Z** = the number of retaining holes)

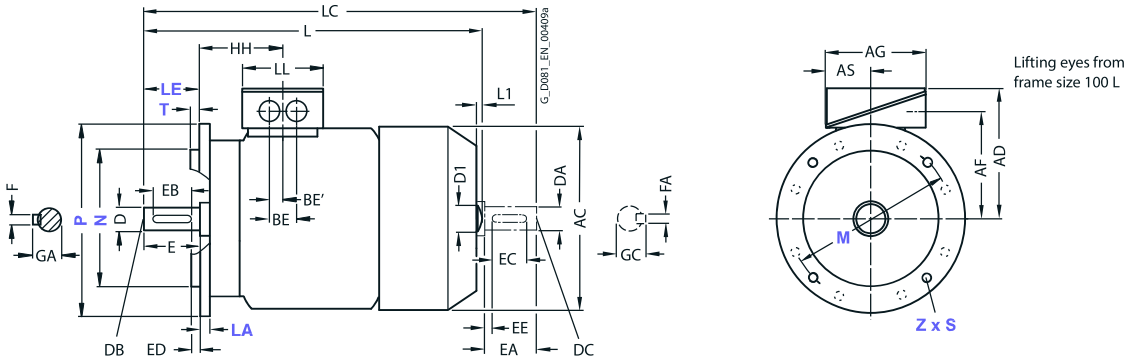

For motor			Dimension designation acc. to **IEC**																				
Frame size	Motor type 1LE1004-	No. of poles	A	AA	**AB**	AC	**AD**	AD'	AF	AF'	AG	AS	B	BA	BA'	BB	BC	BE	BE'	C	CA	**H**	HA	Y
100 L	1AA4	2	160	42	**196**	198	**166**	166	125.5	125.5	135	63.5	140	37.5	37.5	176	33.5	50	25	63	176	**100**	12	45
	1AB4	4																						
	1AB5	4																			216			
112 M	1BA2	2	190	46	**226**	222	**177**	177	136.5	136.5	135	63.5	140	37.5	37.5	176	26	50	25	70	155	**112**	12	52
	1BB2	4																			200			
132 S	1CA0	2	216	53	**256**	262	**202**	202	159.5	159.5	155	70.5	140	38	76[1]	218[2]	26.5	48	24	89	166.5	**132**	15	69
	1CA1	2													38	180					216.5			
	1CB0	4																						
132 M	1CB2	4	216	53	**256**	262	**202**	202	159.5	159.5	155	70.5	178	38	76	218	26.5	48	24	89	178.5	**132**	15	69
160 M	1DA2	2	254	60	**300**	314	**236.5**	236.5	190	190	175	77.5	210	44	89[3]	300[4]	47	57	28.5	108	192	**160**	18	85
	1DA3	2													44	256					252			
	1DB2	4																						
160 L	1DA4	2	254	60	**300**	314	**236.5**	236.5	190	190	175	77.5	254	44	44	300	47	57	28.5	108	208	**160**	18	85
	1DB4	4																						
180 M	1EA2	2	279	65	**339**	356	**259**	259	212.5	212.5	175	77.5	241	80	100	328	30	57	28.5	121	232	**180**	20	95
	1EB2	4																						
180 L	1EB4	4	279	65	**339**	356	**259**	259	212.5	212.5	175	77.5	279	80	100	328	30	57	28.5	121	194	**180**	20	95
200 L	2AA4	2	318	70	**378**	396	**296**	296	238	238	225	102.5	305	90	100	355	45	75	37.5	133	202	**200**	25	108
	2AA5	2																						
	2AB5	4																						

1) With screwed-on feet, dimension BA' is 38 mm.
2) With screwed-on feet, dimension BB is 180 mm.
3) With screwed-on feet, dimension BA' is 44 mm.
4) With screwed-on feet, dimension BB is 256 mm.
5) With screwed-on feet, dimension CA is 192 mm.

© Innomotics 2024

Innomotics GP and Innomotics SD standard motors

Dimensional drawings

Type of construction IM B35

For flange dimensions, see page 1/59 (**Z** = the number of retaining holes)

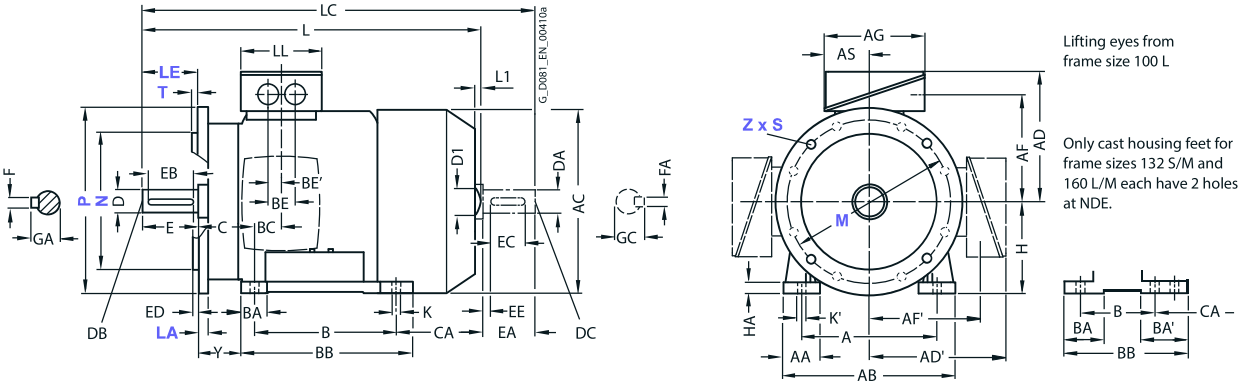

Type of construction IM B14

For flange dimensions, see page 1/59 (**Z** = the number of retaining holes)

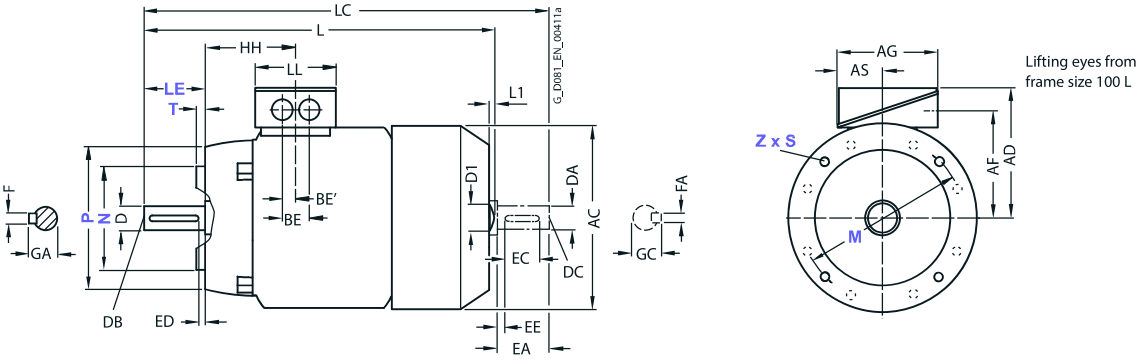

For motor			Dimension designation acc. to **IEC**								DE shaft extension							NDE shaft extension						
Frame size	Motor type 1LE1004-	No. of poles	HH	K	K'	L[1]	L1	D1	LC	LL	D	DB	E	EB	ED	F	GA	DA	DC	EA	EC	EE	FA	GC
100 L	1AA4	2	96.5	12	16	**430.5**	7	32	489	112	28	M10	60	50	5	8	31	24	M8	50	40	5	8	27
	1AB4	4																						
	1AB5	4				**480.5**			529															
112 M	1BA2	2	96	12	16	**414**	7	32	475	112	28	M10	60	50	5	8	31	24	M8	50	40	5	8	27
	1BB2	4				**464**			520															
132 S	1CA0	2	115.5	12	16	**465**	8.5	39	535.5	130	38	M12	80	70	5	10	41	28	M10	60	50	5	8	31
	1CA1	2				**515**			585.5															
	1CB0	4																						
132 M	1CB2	4	115.5	12	16	**515**	8.5	39	585.5	130	38	M12	80	70	5	10	41	28	M10	60	50	5	8	31
160 M	1DA2	2	155	15	19	**604**	10	45	730	145	42	M16	110	90	10	12	45	42	M16	110	90	10	12	45
	1DA3	2				**664**			790															
	1DB2	4																						
160 L	1DA4	2	155	15	19	**664**	10	45	790	145	42	M16	110	90	10	12	45	42	M16	110	90	10	12	45
	1DB4	4																						
180 M	1EA2	2	151	14.5	19	**698**	–	–	814	145	48	M16	110	100	5	14	52	48	M16	110	100	5	14	52
	1EB2	4																						
180 L	1EB4	4	151	14.5	19	**698**	–	–	814	145	48	M16	110	100	5	14	52	48	M16	110	100	5	14	52
200 L	2AA4	2	178	18.5	25	**746**	–	–	860	185	55	M20	110	100	5	16	59	55	M20	110	100	5	16	59
	2AA5	2																						
	2AB5	4																						

[1] The length is specified as far as the tip of the fan cover.

© Innomotics 2024

Innomotics GP and Innomotics SD standard motors

IE3, NEMA Premium Efficient – self-ventilated · Frame sizes 63 M to 90 L

Dimensional drawings

Type of construction IM B3

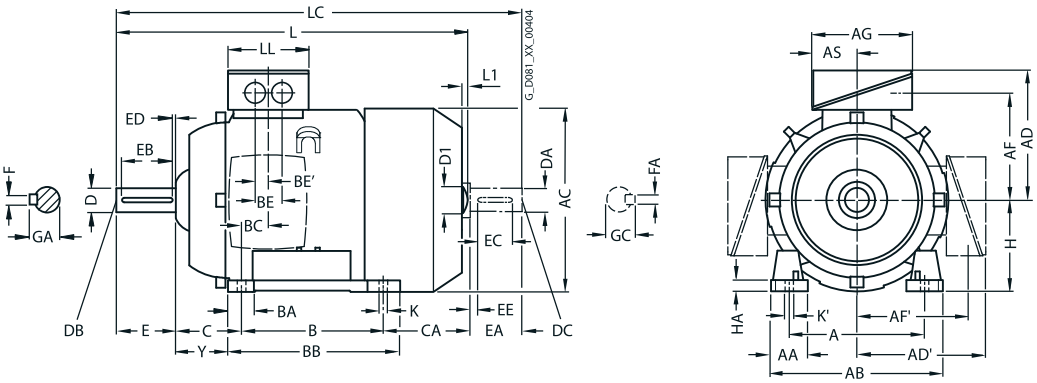

3

Types of construction IM B5 and IM V1

For flange dimensions, see page 1/59 (**Z** = the number of retaining holes)

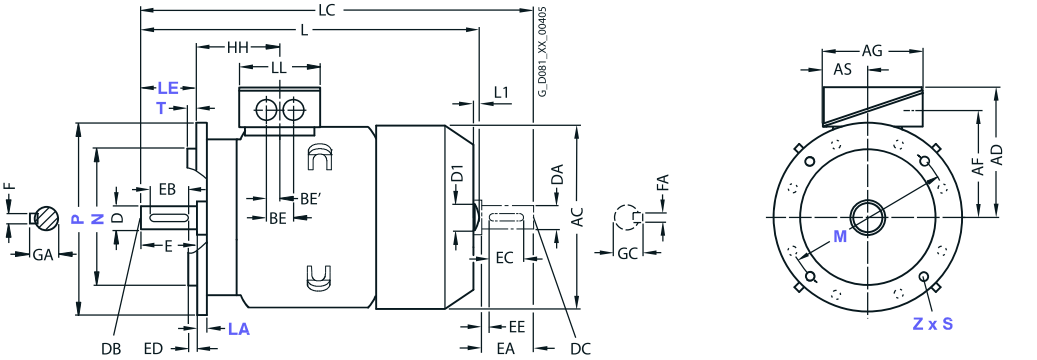

For motor			Dimension designation acc. to **IEC**																			
Frame size	Motor type	No. of poles	A	AA	**AB**	AC	**AD**	AD'	AF	AF'	AG	AS	B	BA	BB	BC	BE	BE'	C	CA	**H**	HA	Y
63 M	1LE1003, 1LE1043 -0BA2, -0BA3 -0BB2, -0BB3	2, 4	100	27	**120**	124	**101**	101	77,5	77,5	75	37,5	80	27	96	29,5	32	14	40	66 92	**63**	7	32
71 M	1LE1003, 1LE1043 -0CA2, -0CB2 -0CC2, -0CA3, -0CB3, -0CC3, -0CD3	2, 4, 6, 8	112	30,5	**132**	145	**111** **109,5**	111 109,5	87,5 86	87,5 86	75	37,5	90	27	106	18,5	32	14	45	83 123	**71**	7	40
80 M	1LE1003, 1LE1043 -0DA2, -0DB2, -0DC2, -0DD2, -0DA3, -0DB3, -0DC3, -0DD3 1LE1023-0DA2, -0DB2, -0DC2 , -0DD2 -0DA3, -0DB3, -0DC3, -0DD3	2, 4, 6, 8	125	30,5	**150**	159	**121,5** **149,5**	121,5 149,5	96,5 112	96,5 112	93 119,5	43 61,5	100	32	118	23	–[1] 50	18[1] 25	50	113 148 113 148	**80**	8	41
90 S	1LE1003, 1IE1043 -0EA0, -0EB0, -0EC0, -0ED0 1LE1023-0EA0, -0EB0, -0EC0, -0ED0	2, 4, 6, 8	140	30,5	**165**	178	**126** **154,5**	126	101,5 117,5	101,5 117	93 119,5	43 61,5	100	33	143	22,5	–[1]	18[1]	56	159	**90**	10	47
90 L	1LE1003, 1LE1043 -0EA4, -0EB4 -0EC4 -0ED4 1LE1023-0EA4, -0EB4, -0ED4	2, 4, 6, 8	140	30,5	**165**	178	**126** **154,5**	126	101,5 117,5	101,5 117,5	93 119,5	43 61,5	125	33	143	22,5	–[1]	18[1]	56	174 134 134	**90**	10	47

[1] Only one termination hole available, except for 1LE1023.
In this case, dimension BE is 32 mm.

© Innomotics 2024

Dimensional drawings

Type of construction IM B35

For flange dimensions, see page 1/59 (**Z** = the number of retaining holes)

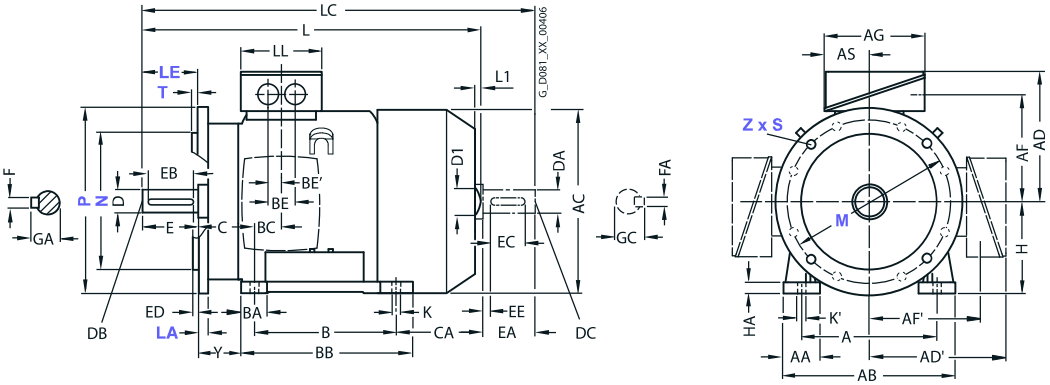

Type of construction IM B14

For flange dimensions, see page 1/59 (**Z** = the number of retaining holes)

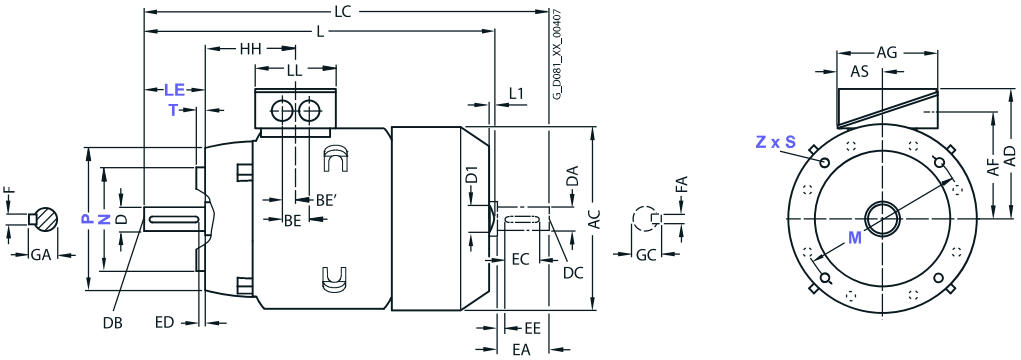

For motor			Dimension designation acc. to **IEC**								DE shaft extension							NDE shaft extension						
Frame size	Motor type	No. of poles	HH	K	K'	**L**[1]	L1	D1	LC	LL	D	DB	E	EB	ED	F	GA	DA	DC	EA	EC	EE	FA	GC
63 M	1LE1003, 1LE1043 -0BA2, -0BA3, --0BB2, -0BB3	2, 4		7	10	**202,5**			232	75	11	M4	23	16	3,5	4	12,5	11	M4	23	16	3,5	4	12,5
						228,5			258															
71 M	1LE1003, 1LE1043 -0CA2, -0CB2 -0CC2, -0CA3, -0CB3, -0CC3, -0CD3	2, 4, 6, 8		7	10	**240**			278	75	14	M5	30	22	4	5	16	14	M5	30	22	4	5	16
						280			318															
80 M	1LE1003, 1LE1043 -0DA2, -0DB2, -0DC2, -0DD2, -0DA3, -0DB3, -0DC3, -0DD3	2, 4, 6, 8	73	9,5	13,5	**292**	–	–	343	79	19	M6	40	32	4	6	21,5	19	M6	40	32	4	6	21,5
						327			378															
	1LE1023-0DA2, -0DB2, -0DC2 , -0DD2 -0DA3, -0DB3, -0DC3, -0DD3					**292**			343	123														
						327			378															
90 S	1LE1003, 1IE1043 -0EA0, -0EB0, -0EC0, -0ED0	2, 4, 6, 8	78,5	10	14	**347**	–	–	405	79	24	M8	50	40	5	8	27	19	M6	40	32	4	6	21,5
	1LE1023-0EA0, -0EB0, -0EC0, -0ED0									123														
90 L	1LE1003, 1LE1043 -0EA4, -0EB4 -0EC4 -0ED4	2, 4, 6, 8	78,5	10	14	**387**	–	–	445	79	24	M8	50	40	5	8	27	19	M6	40	32	4	6	21,5
						347			405															
	1LE1023-0EA4, -0EB4, -0ED4									123														

[1] The length is specified as far as the tip of the fan cover.

© Innomotics 2024

Innomotics GP and Innomotics SD standard motors

IE3, NEMA Premium Efficient – self-ventilated · Frame sizes 100 L to 200 L

Dimensional drawings

Type of construction IM B3

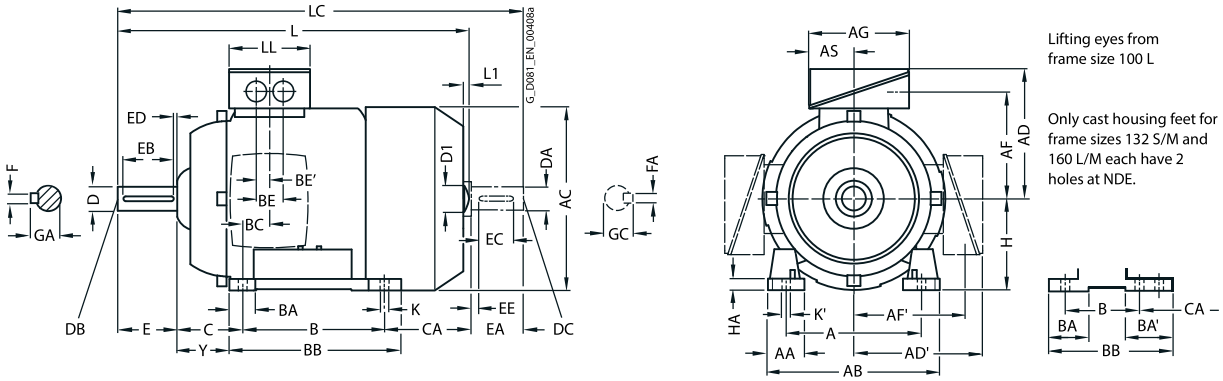

3

Types of construction IM B5 and IM V1

For flange dimensions, see page 1/59 (**Z** = the number of retaining holes)

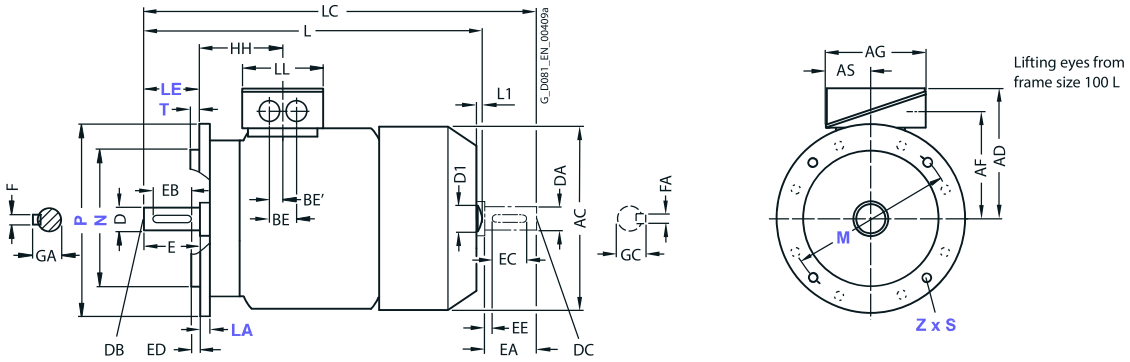

For motor			Dimension designation acc. to **IEC**																				
Frame size	Motor type 1LE1003- 1LE1023- 1LE1043-	No. of poles	A	AA	**AB**	AC	**AD**	AD'	AF	AF'	AG	AS	B	BA	BA'	BB	BC	BE	BE'	C	CA	**H**	HA	Y
100 L	1AA4, 1AB4, 1AB5, 1AC3, 1AD5 1AC4, 1AD4	2, 4, 6, 8	160	42	**196**	198	**166**	166	125.5	125.5	135	63.5	140	37.5	37.5	176	33.5	50	25	63	176 141	**100**	12	45
112 M	1BA2, 1BB2, 1BC1, 1BC2, 1BD1	2, 4, 6	190	46	**226**	222	**177**	177	136.5	136.5	135	63.5	140	37.5	37.5	176	26	50	25	70	155	**112**	12	52
132 S	1CA0, 1CC0, 1CC1, 1CD0 1CA1, 1CB0	2, 6, 8 2, 4	216	53	**256**	262	**202**	202	159.5	159.5	155	70.5	140	38	76[1] 38	218[2] 180	26.5	48	24	89	167 217	**132**	15	69
132 M	1CC2 1CB2, 1CC3, 1CD2	6 4, 6, 8	216	53	**256**	262	**202**	202	159.5	159.5	155	70.5	178	38	76 38	218	26.5	48	24	89	129 179	**132**	15	69
160 M	1DA2, 1DA3, 1DB2, 1DC2, 1DD2, 1DD3	2, 4, 6, 8	254	60	**300**	314	**236.5**	236.5	190	190	175	77.5	210	44	89[3]	300[4]	47	57	28.5	108	192	**160**	18	85
160 L	1DA4, 1DB4, 1DC4, 1DD4	2, 4, 6, 8	254	60	**300**	314	**236.5**	236.5	190	190	175	77.5	254	44	89	300	47	57	28.5	108	208 148	**160**	18	85
180 M	1EA2 1EB2	2, 4	279	65	**339**	356	**259**	259	212.5	212.5	175	77.5	241	80	100	328	30	57	28.5	121	232	**180**	20	95
180 L	1EB4, 1EC4, 1ED4	4, 6, 8	279	65	**339**	356	**259**	259	212.5	212.5	175	77.5	279	80	100	328	30	57	28.5	121	194	**180**	20	95
200 L	2AA4, 2AA5, 2AB5, 2AC4, 2AC5, 2AD5	2, 4, 6, 8	318	70	**378**	396	**296**	296	238	238	225	102.5	305	90	100	355	45	75	37.5	133	202	**200**	25	108

1) With screwed-on feet, dimension BA' is 38 mm.
2) With screwed-on feet, dimension BB is 180 mm.
3) With screwed-on feet, dimension BA' is 44 mm.
4) With screwed-on feet, dimension BB is 256 mm.
5) Only one termination hole available except for 1LE1023. Here the dimension BE 32 mm.

© Innomotics 2024

Innomotics GP and Innomotics SD standard motors

IE3, NEMA Premium Efficient – self-ventilated · Frame sizes 100 L to 200 L

Dimensional drawings

Type of construction IM B35

For flange dimensions, see page 1/59 (**Z** = the number of retaining holes)

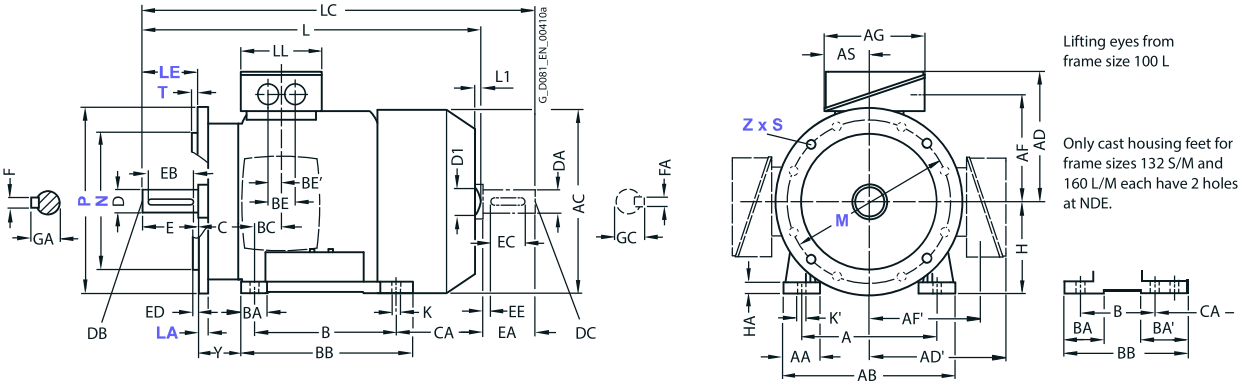

3

Type of construction IM B14

For flange dimensions, see page 1/59 (**Z** = the number of retaining holes)

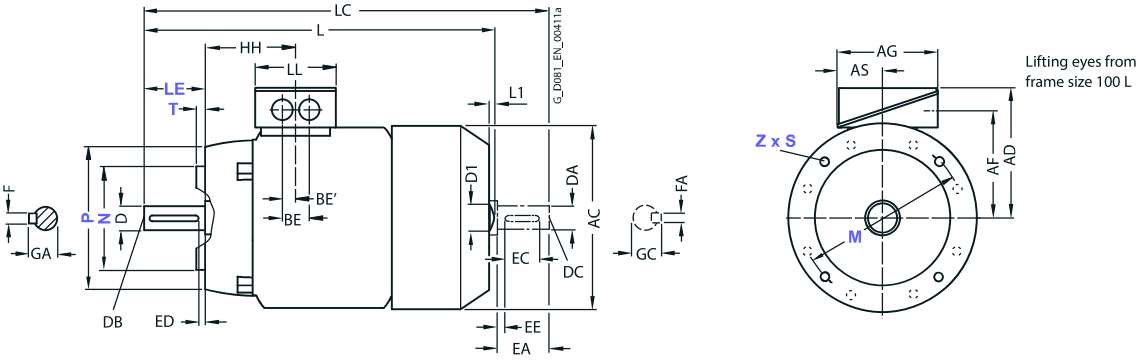

For motor			Dimension designation acc. to **IEC**								DE shaft extension							NDE shaft extension						
Frame size	Motor type 1LE1003-1LE1023-1LE1043	No. of poles	HH	K	K'	**L**[1]	L1	D1	LC	LL	D	DB	E	EB	ED	F	GA	DA	DC	EA	EC	EE	FA	GC
100 L	1AA4, 1AB4, 1AB5, 1AC3, 1AD5 1AC4, 1AD4	2, 4, 6, 8	96.5	12	16	**430.5** **395,5**	7	32	489 454	112	28	M10	60	50	5	8	31	24	M8	50	40	5	8	27
112 M	1BA2, 1BB2, 1BC1, 1BC2, 1BD2	2, 4, 6	96	12	16	**414**	7	32	475	112	28	M10	60	50	5	8	31	24	M8	50	40	5	8	27
132 S	1CA0, 1CC0, 1CC1, 1CD0 1CA1, 1CB0	2, 6, 8 2, 4	115.5	12	16	**465** **515**	8.5	39	535.5 585.5	130	38	M12	80	70	5	10	41	28	M10	60	50	5	8	31
132 M	1CC2 1CB2, 1CC3, 1CD2	6 4, 6, 8	115.5	12	16	**465** **515**	8.5	39	535.5 585.5	130	38	M12	80	70	5	10	41	28	M10	60	50	5	8	31
160 M	1DA2, 1DA3, 1DB2, 1DC2, 1DD2, 1DD3	2, 4, 6, 8	155	15	19	**604**	10	45	730	145	42	M16	110	90	10	12	45	42	M16	110	90	10	12	45
160 L	1DA4, 1DB4, 1DC4, 1DD4	2, 4, 6, 8	155	15	19	**664** **604**	10	45	790 730	145	42	M16	110	90	10	12	45	42	M16	110	90	10	12	45
180 M	1EA2 1EB2	2, 4	151	14.5	19	**698**	–	–	814	145	48	M16	110	100	5	14	52	48	M16	110	100	5	14	52
180 L	1EB4, 1EC4, 1ED4	4, 6, 8	151	14.5	19	**698**	–	–	814	145	48	M16	110	100	5	14	52	48	M16	110	100	5	14	52
200 L	2AA4, 2AA5, 2AB5, 2AC4, 2AC5, 2AD5	2, 4, 6, 8	178	18.5	25	**746**	–	–	860	185	55	M20	110	100	5	16	59	55	M20	110	100	5	16	59

[1] The length is specified as far as the tip of the fan cover.

© Innomotics 2024

Innomotics GP and Innomotics SD standard motors

IE3 – self-ventilated with increased power · Frame sizes 80 M to 200 L

Dimensional drawings

Type of construction IM B3

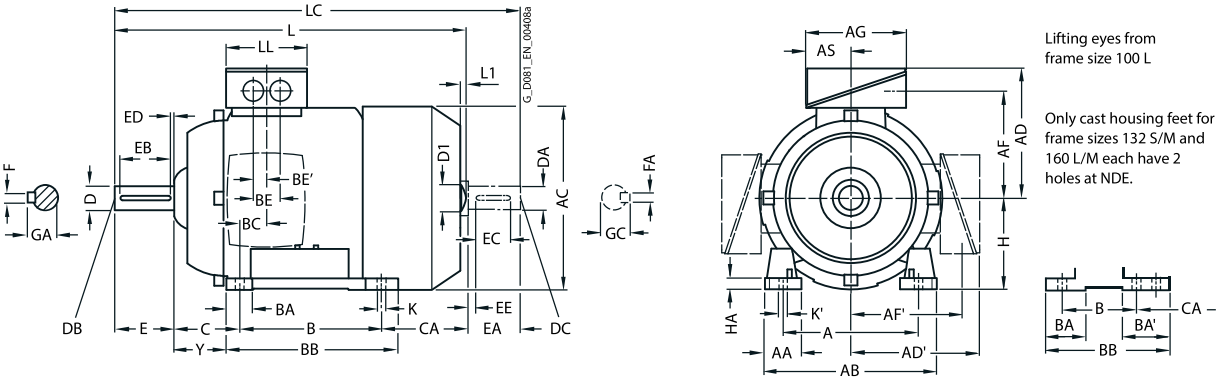

3

Types of construction IM B5 and IM V1

For flange dimensions, see page 1/59 (**Z** = the number of retaining holes)

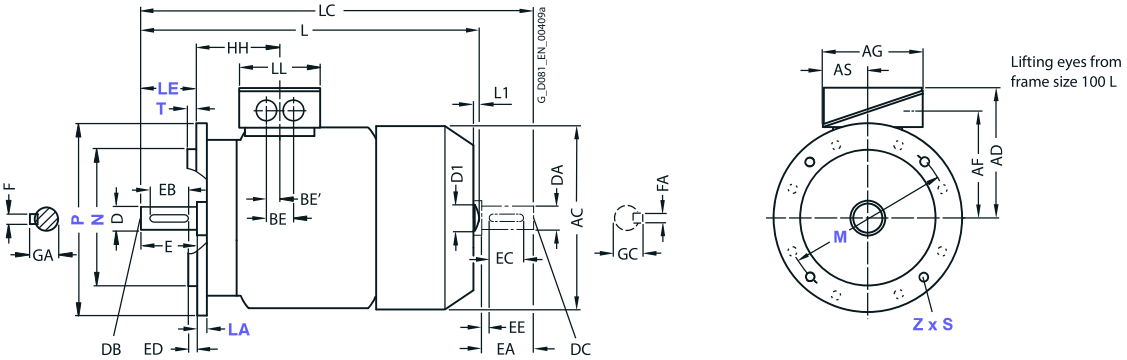

For motor			Dimension designation acc. to **IEC**																					
Frame size	Motor type	No. of poles	A	AA	**AB**	AC	**AD**	AD'	AF	AF'	AG	AS	B	BA	BA'	BB	BC	BE	BE'	C	CA	**H**	HA	Y
80 M	1LE1003-0DA6, -0DB6 1LE1043-0DA6, -0DB6	2, 4	125	30.5	**150**	159	**121.5**	121.5	96.5	96.5	93	43	100	32	32	118	23	–	18	50	148	**80**	8	41
90 L	1LE1003-0EA6, 1LE1043-0EA6,	2	140	30.5	**165**	178	**126**	101.5	101.5	101.5	93	43	125	33	54	143	22.5	–	18	56	174	**90**	10	47
100 L	1LE1003-1AA6, -1AB6 1LE1043-1AA6, -1AB6	2, 4	160	42	**196**	198	**166**	125.5	125.5	125.5	135	63.5	140	37.5	37.5	176	33.5	50	25	63	176 216 176 216	**100**	12	45
112 M	1LE1003-1BA6, -1BB6 1LE1043-1BA6,	2, 4	190	46	**226**	22	**177**	136.5	136.5	136.5	135	63.5	140	37.5	37.5	176	26	50	25	70	155 200 155	**112**	12	52
132 M	1LE1003, 1LE1043 -1CA6, -1CA7 1LE1043-1CA6	2	216	53	**256**	262	**202**	202	159.5	159.5	155	70.5	178	38	38	218	26.5	48	24	89	179	**132**	15	69
160 L	1LE1003-1DA6 -1DB6 1LE1043-1DA6	2, 4	254	60	**300**	314	**236.5**	236.5	190	190	175	77.5	254	44	44	300	47	57	28.5	108	268	**160**	18	85
180 L	1LE1003-1EA6 -1EB6, -1EC6 1LE1043-1EC6	2, 4, 6	279	65	**339**	356	**259**	259	212.5	212.5	175	77.5	279	80	100	328	30	57	28.5	121	194	**180**	20	95
200 L	1LE1003-2AA6 -2AB6, -2AC6, -2AD6 1LE1043-2AC6, -2AD6	2, 4, 6, 8	318	70	**378**	396	**296**	296	238	238	225	102.5	305	90	100	355	45	75	37.5	133	202	**200**	25	108

© Innomotics 2024

Innomotics GP and Innomotics SD standard motors

IE3 – self-ventilated with increased power · Frame sizes 80 M to 200 L

Dimensional drawings

Type of construction IM B35

For flange dimensions, see page 1/59 (**Z** = the number of retaining holes)

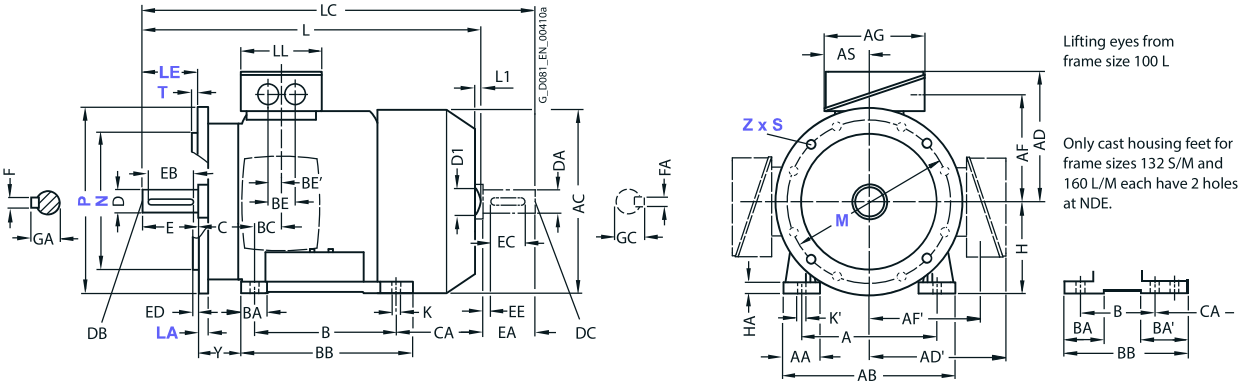

Type of construction IM B14

For flange dimensions, see page 1/59 (**Z** = the number of retaining holes)

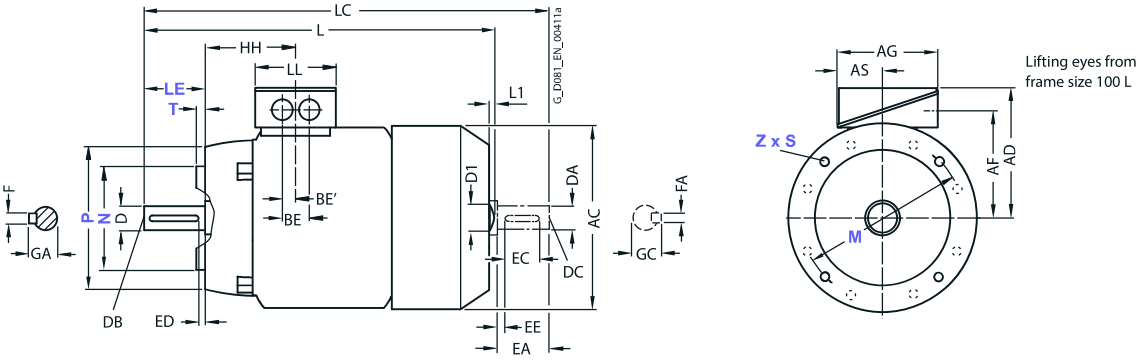

For motor			Dimension designation acc. to **IEC**								DE shaft extension							NDE shaft extension						
Frame size	Motor type	No. of poles	HH	K	K'	**L**[1]	L1	D1	LC	LL	D	DB	E	EB	ED	F	GA	DA	DC	EA	EC	EE	FA	GC
80 M	1LE1003-0DA6, -0DB6 1LE1043-0DA6, -0DB6	2, 4	73	9,5	13,5	**327**	–	–	378	79	19	M6	6	32	4	6	21,5	19	M6	40	32	4	6	21,5
90 L	1LE1003-0EA6, 1LE1043-0EA6	2	78,5	10	14	**387**	–	–	445	79	24	M8	8	40	5	8	27	19	M6	40	32	4	6	21,5
100 L	1LE1003-1AA6, -1AB6 1LE1043-1AA6, -1AB6	2, 4	96,5	12	16	**430,5** **480,5** **430,5** **480,5**	7	32	489 529 489 529	112	28	M10	8	50	5	8	31	24	M8	50	40	5	8	27
112 M	1LE1003-1BA6, -1BB6 1LE1043-1BA6	2	96	12	16	**414** **464** **414**	7	32	475 520 475	112	28	M10	8	50	5	8	31	24	M8	50	40	5	8	27
132 M	1LE1003, 1LE1043 -1CA6, -1CA7 1LE1043-1CA6	2	115,5	12	16	**515**	8,5	39	585,5	130	38	M12	80	70	5	10	41	28	M10	60	50	5	8	31
160 L	1LE1003-1DA6 -1DB6 1LE1043-1DA6	2, 4	155	15	19	**664**	10	45	790	145	42	M16	110	90	10	12	45	42	M16	110	90	10	12	45
180 L	1LE1003-1EA6, -1EB6, -1EC6 1LE1043-1EC6	2, 4, 6	151	14,5	19	**698**	–	–	814	145	48	M16	110	100	5	14	52	48	M16	110	100	5	14	52
200 L	1LE1003-2AA6 -2AB6, -2AC6, -2AD6 1LE1043-2AC6, -2AD6	2, 4, 6, 8	178	18,5	25	**746**	–	–	860	185	55	M20	110	100	5	16	59	55	M20	110	100	5	16	59

[1] The length is specified as far as the tip of the fan cover.

© Innomotics 2024

Innomotics GP and Innomotics SD standard motors

IE3 – forced-air cooled · Frame sizes 63 M to 90 L

Dimensional drawings

Type of construction IM B3

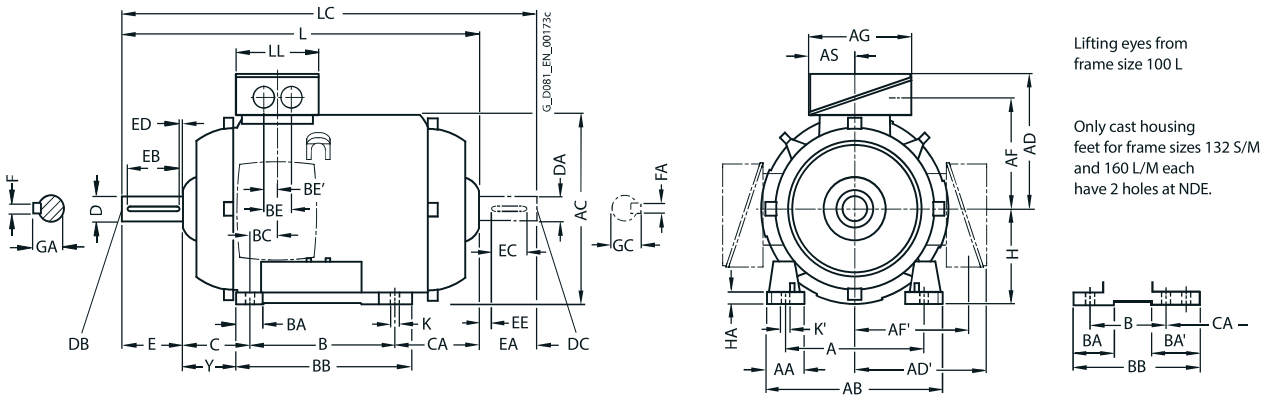

3

Types of construction IM B5 and IM V1

For flange dimensions, see page 1/59 (**Z** = the number of retaining holes)

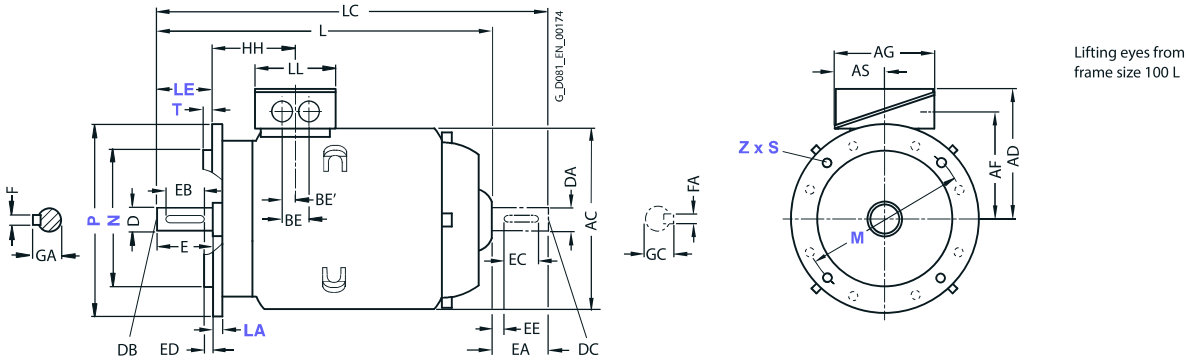

For motor			Dimension designation acc. to **IEC**																					
Frame size	Motor type 1LE1023-1LE1043-	No. of poles	A	AA	**AB**	AC	**AD**	AD'	AF	AF'	AG	AS	B	BA	BA'	BB	BC	BE	BE'	C	CA	**H**	HA	Y
63 M	0BA2, 0BA3, 0BB2, -0BB3	2, 4	100	27	**120**	124	**101**	101	77.5	77.5	75	37.5	80	27	27	96	29.5	32	14	40		**63**	7	32
71 M	0CA2, 0CB2, 0CC2, 0CA3, 0CB3, 0CC3, 0CD3	2, 4, 6, 8	112	30.5	**132**	145	**111**	111	87.5	87.5	75	37.5	90	27	27	106	18.5	32	14	45		**71**	7	40
							109.5	109.5	86	86														
80 M	0DA2, 0DB2, 0DC2	2, 4, 6	125	30.5	**150**	159	**121.5**	121.5	96.5	96.5	93	43	100	32	32	118	23	–	18[1]	50	70	**80**	8	41
	0DA3, 0DB3, 0DC3	2, 4, 6																			105.5			
90 S	0EA0, 0EB0, 0EC0	2, 4, 6	140	30.5	**165**	178	**126**	126	101.5	101.5	93	43	100	33	54	143	22.5	–	18[1]	56	130	**90**	10	47
90 L	0EA4, 0EB4, 0EC4	2, 4, 6	140	30.5	**165**	178	**126**	126	101.5	101.5	93	43	125	33	54	143	22.5	–	18[1]	56	118	**90**	10	47

[1] Only one termination hole available.

© Innomotics 2024

Innomotics GP and Innomotics SD standard motors

IE3 – forced-air cooled · Frame sizes 63 M to 90 L

Dimensional drawings

Type of construction IM B35

For flange dimensions, see page 1/59 (**Z** = the number of retaining holes)

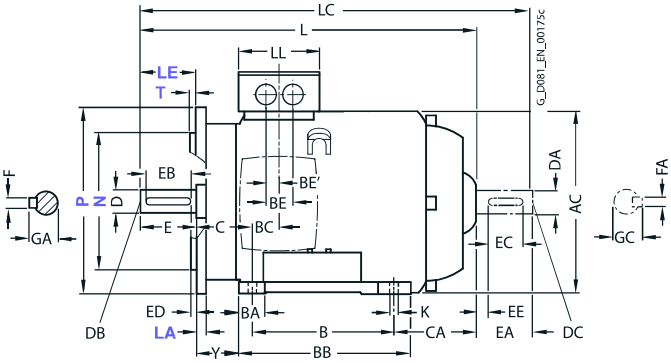

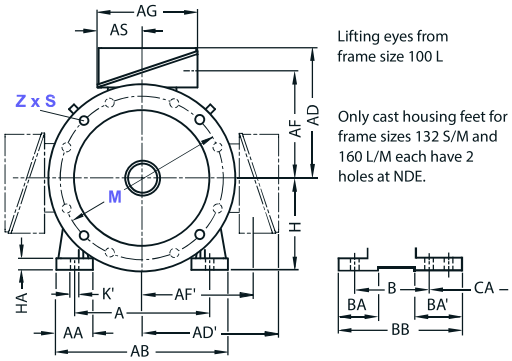

Type of construction IM B14

For flange dimensions, see page 1/59 (**Z** = the number of retaining holes)

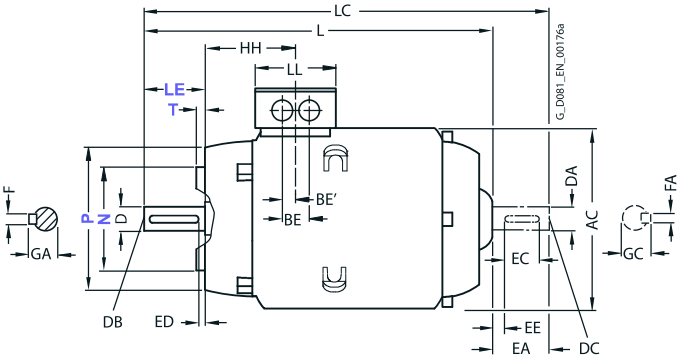

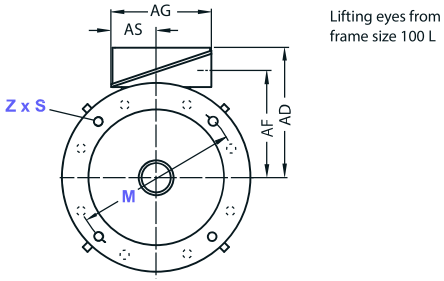

For motor			Dimension designation acc. to **IEC**						DE shaft extension							NDE shaft extension						
Frame size	Motor type 1LE1023-1LE1043-	No. of poles	HH	K	K'	**L**	LC	LL	D	DB	E	EB	ED	F	GA	DA	DC	EA	EC	EE	FA	GC
63 M	0BA2, 0BA3, 0BB2, 0BB3	2, 4		7	10	**202.5** **228.5**		75	11	M4	23	16	3.5	4	12.5							
71 M	0CA2, 0CB2, 0CC2, 0CA3, 0CB3, 0CC3, 0CD3	2, 4, 6, 8		7	10	**240** **280**		75	14	M5	30	22	4	5	16							
80 M	0DA2, 0DB2, 0DC2	2, 4, 6	73	9.5	13.5	**253.5**	300.5	79	19	M6	40	32	4	6	21.5	19	M6	40	32	4	6	21.5
	0DA3, 0DB3, 0DC3	2, 4, 6				**288**	335.5															
90 S	0EA0, 0EB0, 0EC0	2, 4, 6	78.5	10	14	**294.5**	349	79	19	M6	40	32	5	8	27	19	M6	40	32	4	6	21.5
90 L	0EA4, 0EB4, 0EC4	2, 4, 6	78.5	10	14	**334.5**	389	79	19	M6	40	32	5	8	27	19	M6	40	32	4	6	21.5

© Innomotics 2024

Innomotics GP and Innomotics SD standard motors

IE3 – forced-air cooled · Frame sizes 100 L to 200 L

Dimensional drawings

Type of construction IM B3

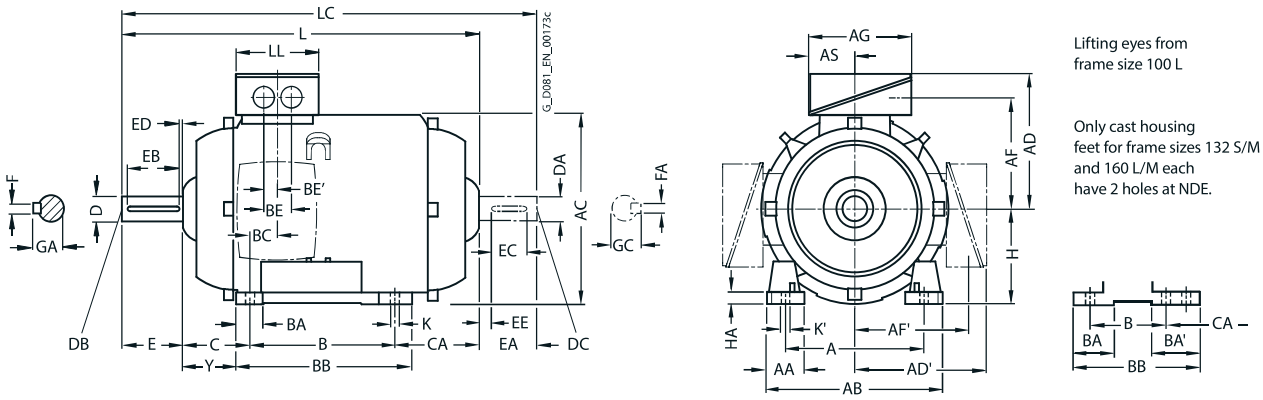

Types of construction IM B5 and IM V1

For flange dimensions, see page 1/59 (**Z** = the number of retaining holes)

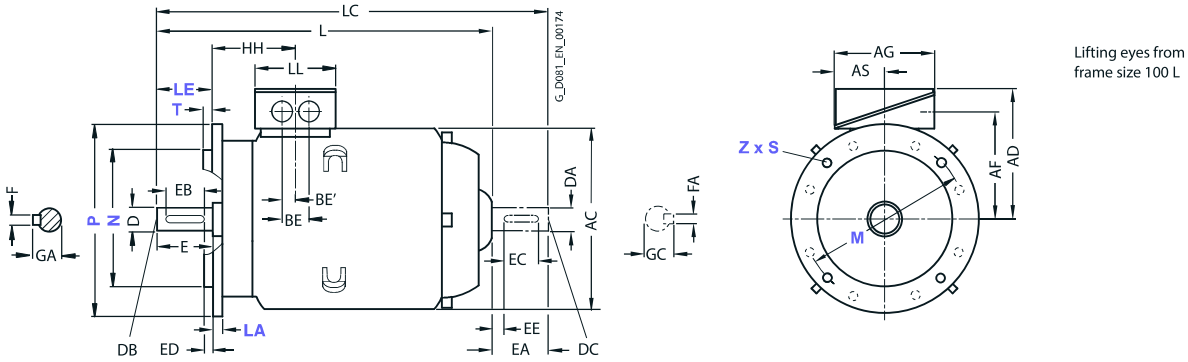

For motor			Dimension designation acc. to **IEC**																					
Frame size	Motor type 1LE1023- 1LE1043-	No. of poles	A	AA	**AB**	AC	**AD**	AD'	AF	AF'	AG	AS	B	BA	BA'	BB	BC	BE	BE'	C	CA	**H**	HA	Y
100 L	1AA4, 1AB4, 1AB5	2, 4	160	42	**196**	198	**166**	166	125.5	125.5	135	63.5	140	37.5	37.5	176	33.5	50	25	63	–	**100**	12	45
	1AC3	6																						
112 M	1BA2, 1BB2	2, 4	190	46	**226**	222	**177**	177	136.5	136.5	135	63.5	140	37.5	37.5	176	26	50	25	70	–	**112**	12	52
132 S	1CA0, 1CC0	2, 6	216	53	**256**	262	**202**	202	159.5	159.5	155	70.5	140	38	76[1]	218[2]	26.5	48	24	89	–	**132**	15	69
	1CA1, 1CB0	2, 4													38	180								
132 M	1CC2	6	216	53	**256**	262	**202**	202	159.5	159.5	155	70.5	178	38	76	218	26.5	48	24	89	–	**132**	15	69
	1CB2, 1CC3	4, 6													38									
160 M	1DA2, 1DA3, 1DB2, 1DC2	2, 4, 6	254	60	**300**	314	**236.5**	236.5	190	190	175	77.5	210	44	89[3]	300[4]	47	57	28.5	108	–	**160**	18	85
160 L	1DA4, 1DB4, 1DC4	2, 4, 6	254	60	**300**	314	**236.5**	236.5	190	190	175	77.5	254	44	44	300	47	57	28.5	108	–	**160**	18	85
180 M	1EA2, 1EB2,	2, 4	279	65	**339**	356	**259**	259	212.5	212.5	175	77.5	241	80	100	328	30	57	28.5	121	–	**180**	20	95
180 L	1EB4, 1EC4	4, 6	279	65	**339**	356	**259**	259	212.5	212.5	175	77.5	279	80	100	328	30	57	28.5	121	–	**180**	20	95
200 L	2AA4, 2AA5, 2AB5, 2AC4, 2AC5	2, 4, 6	318	70	**378**	396	**296**	296	238	238	225	102.5	305	90	100	355	45	75	37.5	133	–	**200**	25	108

1) With screwed-on feet, dimension BA' is 38 mm.
2) With screwed-on feet, dimension BB is 180 mm.
3) With screwed-on feet, dimension BA' is 44 mm.
4) With screwed-on feet, dimension BB is 256 mm.

© Innomotics 2024

Innomotics GP and Innomotics SD standard motors

IE3 – forced-air cooled · Frame sizes 100 L to 200 L

Dimensional drawings

Type of construction IM B35

For flange dimensions, see page 1/59 (**Z** = the number of retaining holes)

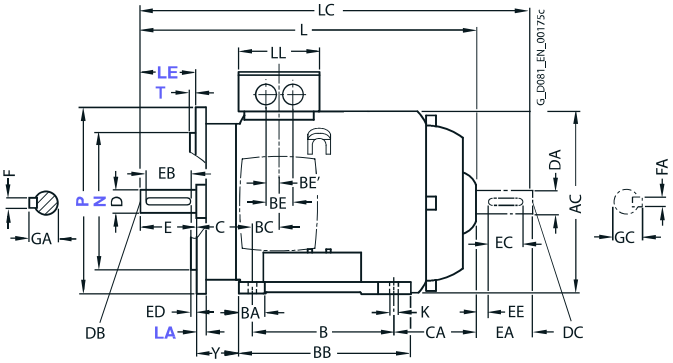

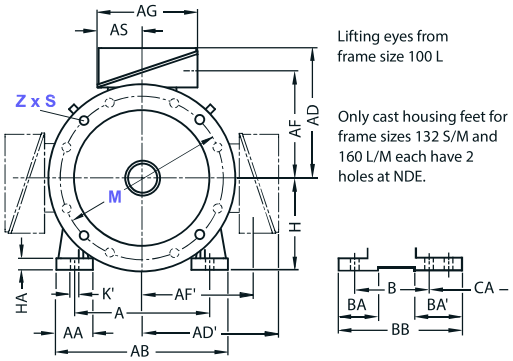

Type of construction IM B14

For flange dimensions, see page 1/59 (**Z** = the number of retaining holes)

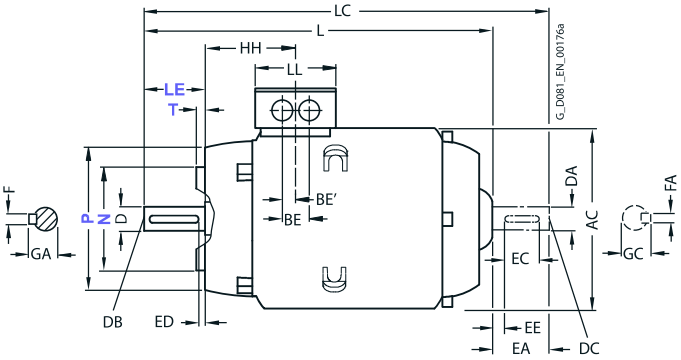

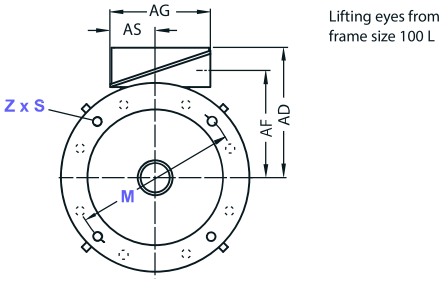

For motor			Dimension designation acc. to **IEC**						DE shaft extension							NDE shaft extension						
Frame size	Motor type 1LE1023-1LE1043-	No. of poles	HH	K	K'	**L**	LC	LL	D	DB	E	EB	ED	F	GA	DA	DC	EA	EC	EE	FA	GC
100 L	1AA4, 1AB4, 1AB5	2, 4	96.5	12	16	**356.5**	411	112	28	M10	60	50	5	8	31	24	M8	50	40	5	8	27
	1AC3	6																				
112 M	1BA2, 1BB2	2, 4	96	12	16	**336**	390	112	28	M10	60	50	5	8	31	24	M8	50	40	5	8	27
132 S	1CA0, 1CC0	2, 6	115.5	12	16	**380.5**	446	130	38	M12	80	70	5	10	41	28	M10	60	50	5	8	31
	1CA1, 1CB0	2, 4				**430.5**	496									–	–	–	–	–	–	–
132 M	1CC2	6	115.5	12	16	**380.5**	446	130	38	M12	80	70	5	10	41	28	M10	60	50	5	8	31
	1CB2, 1CC3	4, 6				**430.5**	496									–	–	–	–	–	–	–
160 M	1DA2, 1DA3, 1DB2, 1DC2	2, 4, 6	155	15	19	**510**	630	145	42	M16	110	90	10	12	45	42	M16	110	90	10	12	45
160 L	1DA4, 1DB4, 1DC4	2, 4, 6	155	15	19	**570**	690	145	42	M16	110	90	10	12	45	42	M16	110	90	10	12	45
180 M	1EA2, 1EB2	2, 4	151	14.5	19	**592**	706	145	48	M16	110	100	5	14	52	48	M16	110	100	5	14	52
180 L	1EB4, 1EC4	4, 6	151	14.5	19	**592**	706	145	48	M16	110	100	5	14	52	48	M16	110	100	5	14	52
200 L	2AA4, 2AA5, 2AB5, 2AC4, 2AC5	2, 4, 6	178	18.5	25	**642**	772	185	55	M20	110	100	5	16	59	55	M20	110	100	5	16	59

© Innomotics 2024

Innomotics GP and Innomotics SD standard motors

IE3, NEMA Premium Efficient – self-ventilated · Frame sizes 100 L to 200 L

Dimensional drawings

Type of construction IM B3

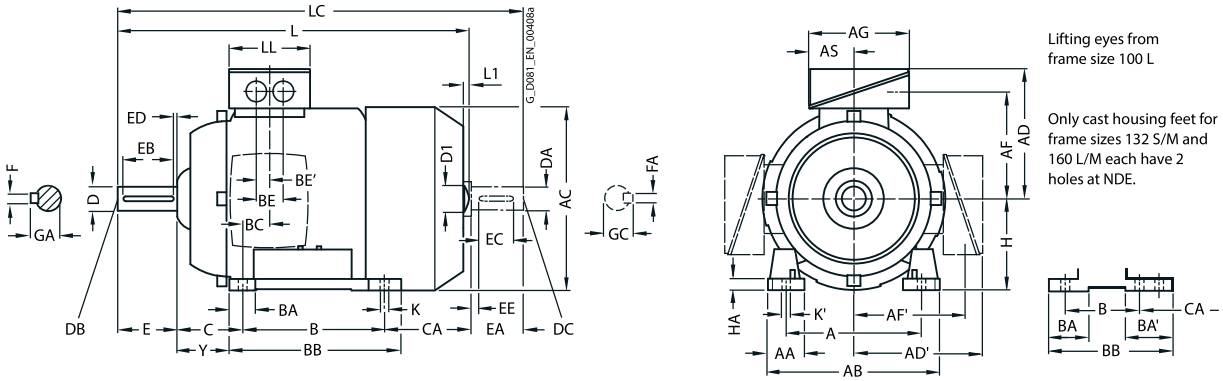

3

Types of construction IM B5 and IM V1

For flange dimensions, see page 1/59 (**Z** = the number of retaining holes)

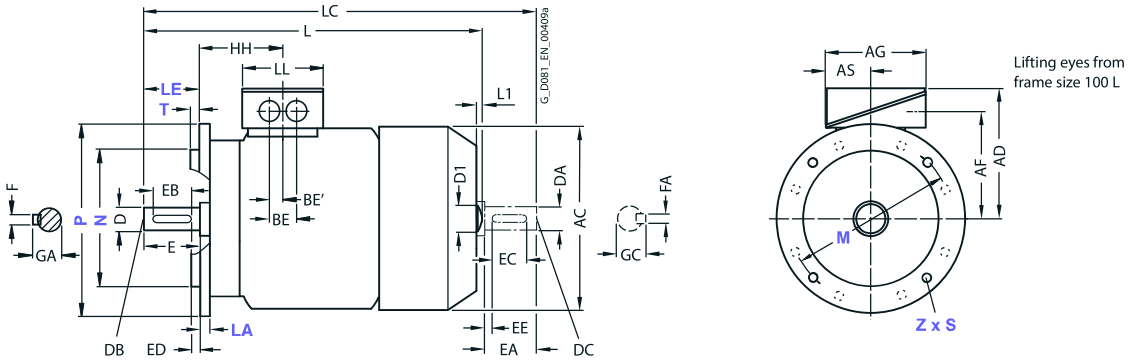

For motor			Dimension designation acc. to **IEC**																					
Frame size	Motor type 1LE1083-	No. of poles	A	AA	**AB**	AC	**AD**	AD'	AF	AF'	AG	AS	B	BA	BA'	BB	BC	BE	BE'	C	CA	**H**	HA	Y
100 L	1AA4, 1AB4	2, 4	160	42	**196**	198	**166**	166	125.5	125.5	135	63.5	140	37.5	37.5	176	33.5	50	25	63	176	**100**	12	45
	1AB5	4																			216			
112 M	1BA2	2	190	46	**226**	222	**177**	177	136.5	136.5	135	63.5	140	37.5	37.5	176	26	50	25	70	155	**112**	12	52
	1BB2	4																			200			
132 S	1CA0, 1CA1, 1CB0	2, 4	216	53	**256**	262	**202**	202	159.5	159.5	155	70.5	140	38	76[1]	218[2]	26.5	48	24	89	167	**132**	15	69
132 M	1CB2	4	216	53	**256**	262	**202**	202	159.5	159.5	155	70.5	178	38	76	218	26.5	48	24	89	179	**132**	15	69
160 M	1DA2, 1DA3, 1DB2	2, 4	254	60	**300**	314	**236.5**	236.5	190	190	175	77.5	210	44	89[3]	300[4]	47	57	28.5	108	192	**160**	18	85
160 L	1DA4, 1DB4	2, 4	254	60	**300**	314	**236.5**	236.5	190	190	175	77.5	254	44	89	300	47	57	28.5	108	208	**160**	18	85
180 M	1EA2 1EB2	2, 4	279	65	**339**	356	**259**	259	212.5	212.5	175	77.5	241	80	100	328	30	57	28.5	121	232	**180**	20	95
180 L	1EB4, 1EC4, 1ED4	4, 6, 8	279	65	**339**	356	**259**	259	212.5	212.5	175	77.5	279	80	100	328	30	57	28.5	121	194	**180**	20	95
200 L	2AA4, 2AA5, 2AB5, 2AC4, 2AC5, 2AD5	2, 4, 6, 8	318	70	**378**	396	**296**	296	238	238	225	102.5	305	90	100	355	45	75	37.5	133	202	**200**	25	108

1) With screwed-on feet, dimension BA' is 38 mm.
2) With screwed-on feet, dimension BB is 180 mm.
3) With screwed-on feet, dimension BA' is 44 mm.
4) With screwed-on feet, dimension BB is 256 mm.

© Innomotics 2024

Innomotics GP and Innomotics SD standard motors

IE3, NEMA Premium Efficient – self-ventilated · Frame sizes 100 L to 200 L

Dimensional drawings

Type of construction IM B35

For flange dimensions, see page 1/59 (**Z** = the number of retaining holes)

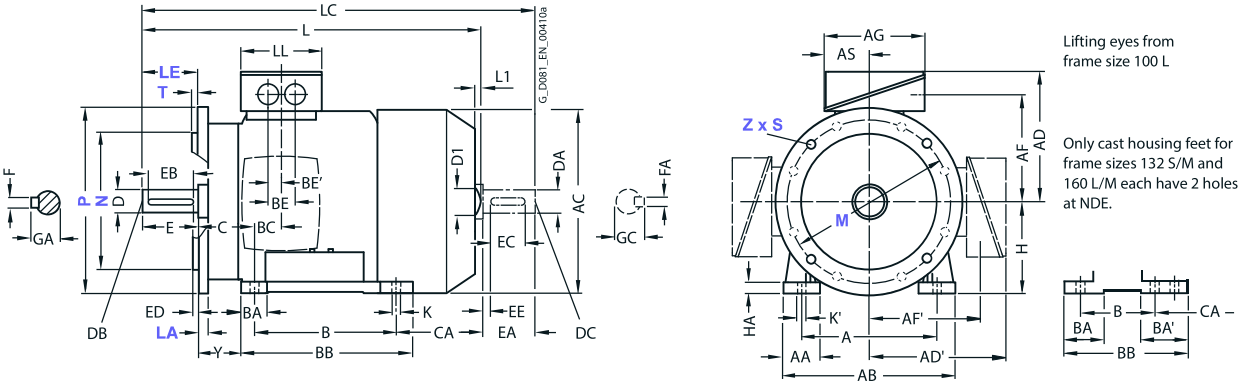

Type of construction IM B14

For flange dimensions, see page 1/59 (**Z** = the number of retaining holes)

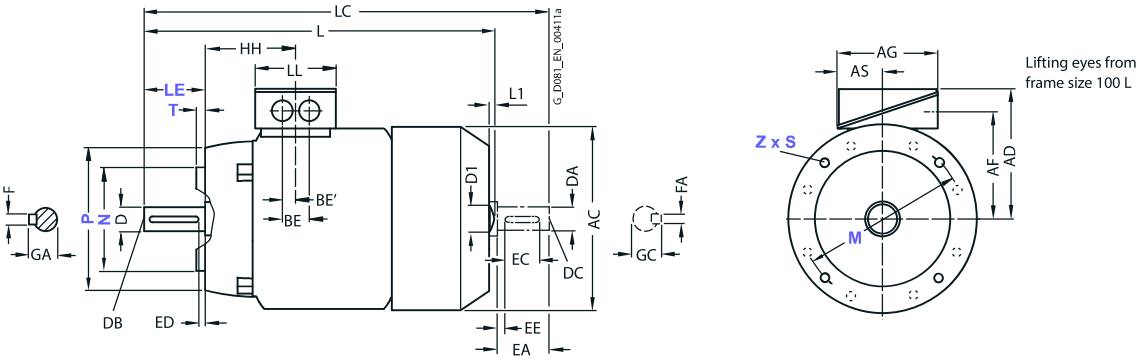

For motor			Dimension designation acc. to **IEC**								DE shaft extension							NDE shaft extension						
Frame size	Motor type 1LE1083	No. of poles	HH	K	K'	**L**[1]	L1	D1	LC	LL	D	DB	E	EB	ED	F	GA	DA	DC	EA	EC	EE	FA	GC
100 L	1AA4, 1AB4	2, 4	96.5	12	16	**430.5**	7	32	489	112	28	M10	60	50	5	8	31	24	M8	50	40	5	8	27
	1 AB5	4				**470.5**			529															
112 M	1BA2	2	96	12	16	**414**	7	32	475	112	28	M10	60	50	5	8	31	24	M8	50	40	5	8	27
	1BB2	4				**459**			520															
132 S	1CA0, 1CA1, 1CB0	2, 4	115.5	12	16	**515**	8.5	39	585.5	130	38	M12	80	70	5	10	41	28	M10	60	50	5	8	31
132 M	1CB2	4	115.5	12	16	**515**	8.5	39	585.5	130	38	M12	80	70	5	10	41	28	M10	60	50	5	8	31
160 M	1DA2, 1DA3, 1DB2	2, 4	155	15	19	**604**	10	45	730	145	42	M16	110	90	10	12	45	42	M16	110	90	10	12	45
160 L	1DA4, 1DB4	2, 4	155	15	19	**664**	10	45	790	145	42	M16	110	90	10	12	45	42	M16	110	90	10	12	45
180 M	1EA2 1EB2	2, 4	151	14.5	19	**698**	–	–	814	145	48	M16	110	100	5	14	52	48	M16	110	100	5	14	52
180 L	1EB4, 1EC4, 1ED4	4, 6, 8	151	14.5	19	**698**	–	–	814	145	48	M16	110	100	5	14	52	48	M16	110	100	5	14	52
200 L	2AA4, 2AA5, 2AB5, 2AC4, 2AC5, 2AD5	2, 4, 6, 8	178	18.5	25	**746**	–	–	860	185	55	M20	110	100	5	16	59	55	M20	110	100	5	16	59

[1] The length is specified as far as the tip of the fan cover.

© Innomotics 2024

Innomotics GP and Innomotics SD standard motors

IR3 Rendimento Premium – self-ventilated · Frame sizes 80 M to 160 L

Dimensional drawings

ype of construction IM B3

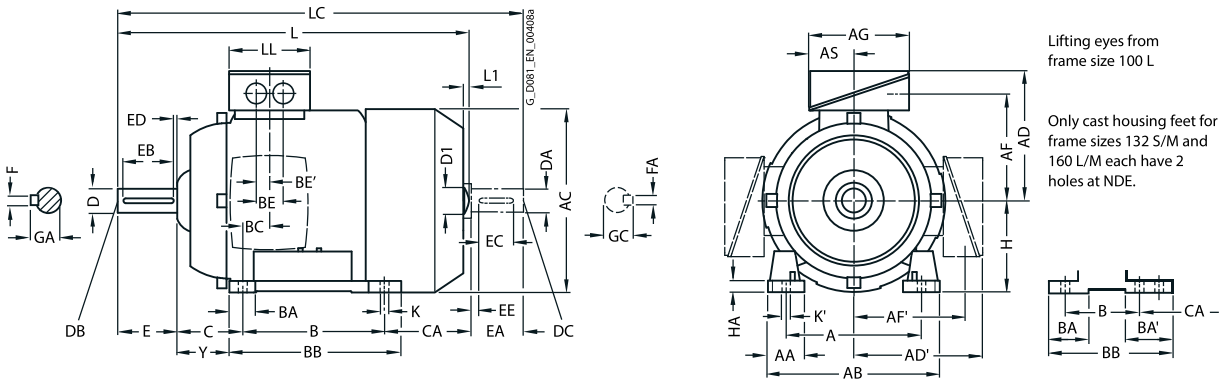

3

Types of construction IM B5 and IM V1

For flange dimensions, see page 1/59 (**Z** = the number of retaining holes)

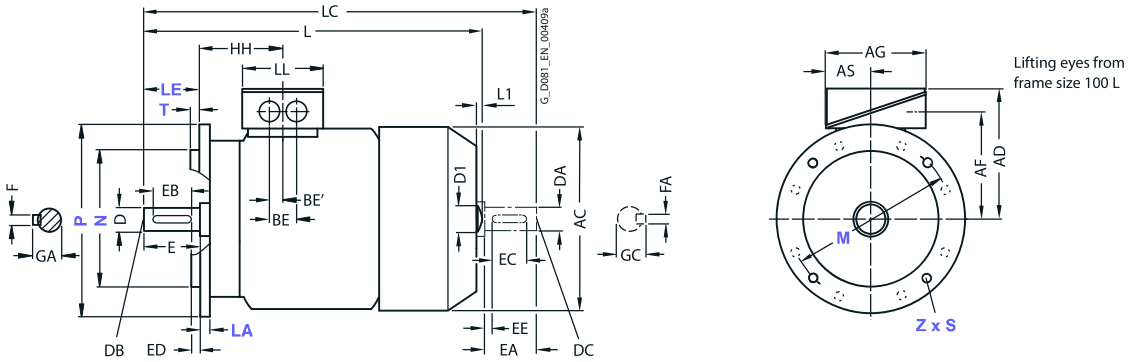

For motor			Dimension designation acc. to **IEC**																				
Frame size	Motor type 1LE1073-	No. of poles	A	AA	**AB**	AC	**AD**	AD´	AF	AF´	AG	AS	B	BA	BA´	BB	BC	BE	BE´	C	CA	**H**	HA	Y
80 M	0DA3, 0DA6, 0DB3, 0DB6, 0DC3, 0DD3	2, 4, 6, 8	125	30.5	**150**	159	**121.5**	121.5	96.5	96.5	93	43	100	32	-	118	23	–	18	50	113	**80**	8	41
	0DC2	6, 8																						
90 S	0EA4, 0EB4	2, 4	140	305	**165**	178	**126**	126	101.5	101.5	93	43	100	33	-	143	22.5	–	18	56	159	**90**	10	47
	0EC0, 0ED0	6, 8																						
90 L	0EB6	4	140	305	**165**	178	**126**	126	101.5	101.5	93	43	125	33	-	143	22.5	–	18	56	154	**90**	10	47
	0ED4	8																						
100 L	1AA4,1AA6, 1AB5, 1AC3	2, 4, 6, 8	160	42	**196**	198	**166**	166	125.5	125.5	135	63.5	140	37.5	37.5	176	33.5	50	25	63	176	**100**	12	45
	1AB6	4																						
	1AD4	8																						
112 M	1BA5,1BA6, 1BB5, 1BC1,	2, 4, 6, 8	190	46	**226**	222	**177**	177	136.5	136.5	135	63.5	140	37.5	37	176	26	50	25	70	155	**112**	12	52
	1BB6	4																						
132 S	1CA1,1CB2	2, 4	216	53	**256**	262	**202**	202	159.5	159.5	155	70.5	140	38	76	218	26.5	48	24	89	178.5	**132**	15	69
	1CC0,1CC1, 1CC2,1CC4, 1CD0	6, 8													38	180					128.5			
132 M	1CA5,1CA6, 1CC3,1CC6,	2, 6, 8	216	53	**256**	262	**202**	202	159.5	159.5	155	70.5	178	38	76	218	26.5	48	24	89	178.5	**132**	15	69
	1CB5, 1CB6	4																						
160 M	1DA4,1DB4, 1DC3,1DC4	2, 4, 6	254	60	**300**	314	**236.5**	236.5	190	190	175	77.5	210	44	44	256	47	57	28.5	108	192	**160**	18	85
	1DA3,1DD1, 1DD3	2, 8																						
160 L	1DA6, 1DB6, 1DC6, 1DD4	2, 4, 6, 8	254	60	**300**	314	**236.5**	236.5	190	190	175	77.5	254	44	89	300	47	57	28.5	108	208	**160**	18	85

© Innomotics 2024

Innomotics GP and Innomotics SD standard motors

Dimensional drawings

Type of construction IM B35

For flange dimensions, see page 1/59 (**Z** = the number of retaining holes)

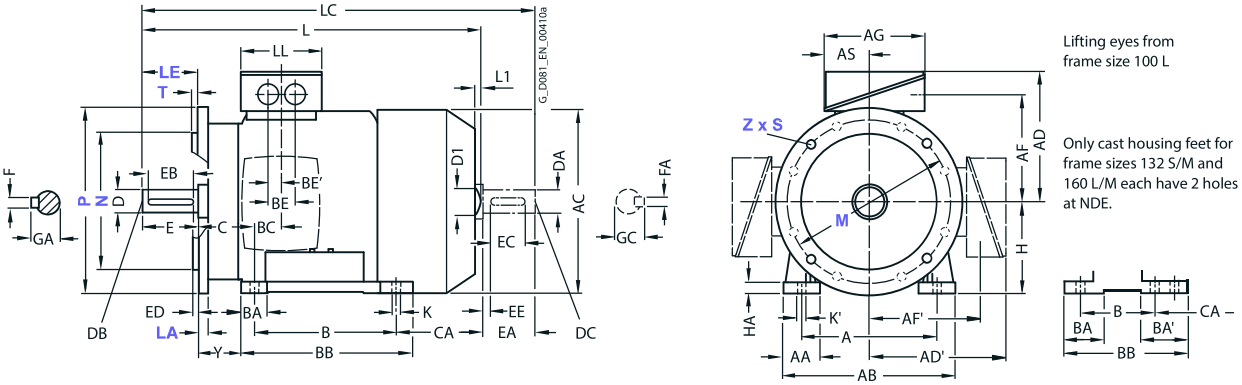

Type of construction IM B14

For flange dimensions, see page 1/59 (**Z** = the number of retaining holes)

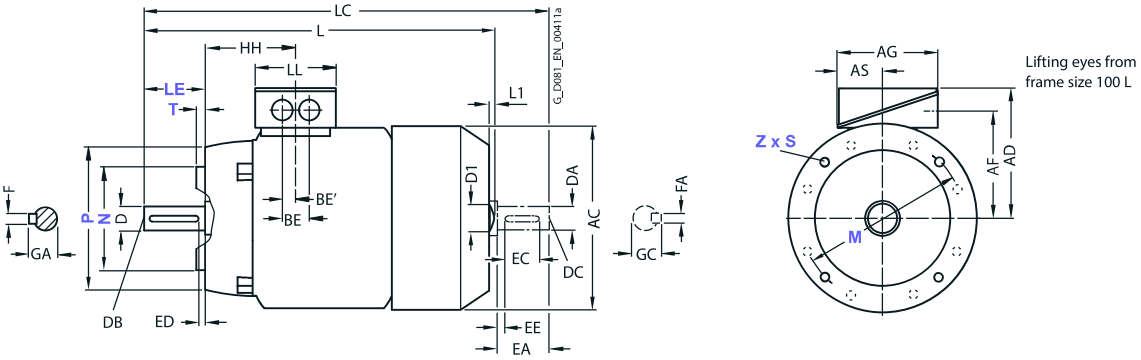

For motor			Dimension designation acc. to **IEC**								DE shaft extension							NDE shaft extension						
Frame size	Motor type 1LE1073-	No. of poles	HH	K	K'	**L**[1]	L1	D1	LC	LL	D	DB	E	EB	ED	F	GA	DA	DC	EA	EC	EE	FA	GC
80 M	0DA3, 0DA6, 0DB3, 0DB6, 0DC3, 0DD3	2, 4, 6, 8	73	9.5	13.5	**327**	–	–	378	79	19	M6	40	32	4	6	21.5	19	M6	40	32	4	6	21.5
	0DC2	6, 8				**292**			343															
90 S	0EA4, 0EB4	2, 4	78.5	10	14	**387**	–	–	445	79	24	M8	50	40	5	8	27	19	M6	40	32	4	6	21.5
	0EC0, 0ED0	6, 8				**347**			405															
90 L	0EB6	4	78.5	10	14	**433**	–	–	491	79	24	M8	50	40	5	8	27	19	M6	40	32	4	6	21.5
	0ED4	8				**347**			405															
100 L	1AA4,1AA6, 1AB5, 1AC3	2, 4, 6, 8	96.5	12	16	**430.5**	7	32	489	112	28	M10	60	50	5	8	31	24	M8	50	40	5	8	27
	1AB6	4				**480.5**			529															
	1AD4	8				**395.5**			454															
112 M	1BA5,1BA6, 1BB5, 1BC1,	2, 4, 6, 8	96	12	16	**414**	7	32	475	112	28	M10	60	50	5	8	31	24	M8	50	40	5	8	27
	1BB6	4				**464**			520															
132 S	1CA1,1CB2	2, 4	115.5	12	16	**515**	8.5	39	585.5	130	38	M12	80	70	5	10	41	28	M10	60	50	5	8	31
	1CC0,1CC1, 1CC2,1CC4, 1CD0	6, 8				**465**			535.5															
132 M	1CA5,1CA6, 1CC3,1CC6,	2, 6, 8	115.5	12	16	**515**	8.5	39	585.5	130	38	M12	80	70	5	10	41	28	M10	60	50	5	8	31
	1CB5, 1CB6	4				**574**			644.5															
160 M	1DA4,1DB4, 1DC3,1DC4	2, 4, 6	155	15	19	**664**	10	45	730	145	42	M16	110	90	10	12	45	42	M16	110	90	10	12	45
	1DA3,1DD1, 1DD3	2, 8				**604**																		
160 L	1DA6, 1DB6, 1DC6, 1DD4	2, 4, 6, 8	155	15	19	**664**	10	54	790	145	42	M16	110	90	10	12	45	42	M16	110	90	10	12	45

[1] In the low-noise version, a second shaft extension and/or mounted encoder is not possible.

© Innomotics 2024

Innomotics GP and Innomotics SD standard motors

IE1, IE2, NEMA Energy Efficient and pole-changing – self-ventilated · Frame sizes 63 M to 200

TDimensional drawings

Type of construction IM B3

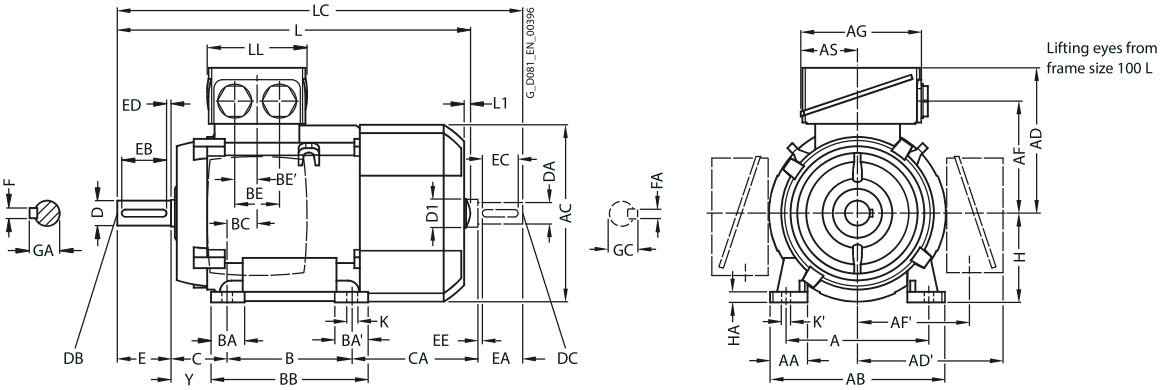

3

Types of construction IM B5 and IM V1

For flange dimensions, see page 1/59 (**Z** = the number of retaining holes)

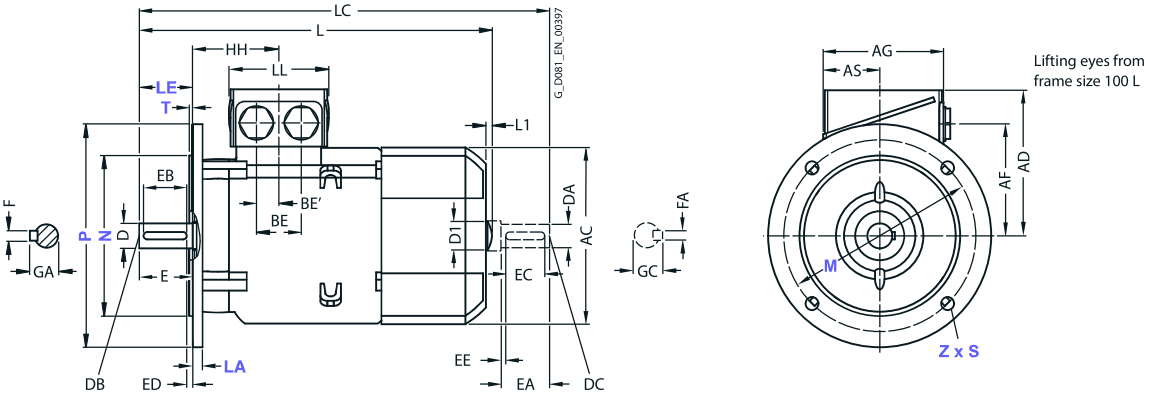

For motor			Dimension designation acc. to **IEC**																					
Frame size	Motor type 1LE100. 1LE101. 1LE1021	No. of poles	A	AA	**AB**	AC	**AD**	AD'	AF	AF'	AG	AS	B	BA	BA'	BB	BC	BE	BE'	C	CA	**H**	HA	Y
63 M	1LE100.-0B.2 1LE1002-0B.3	2, 4, 6	100	27	**120**	124	**101**	–	78	–	75	37.5	80	27	–	96	30	32	18	40	66	**63**	7	32
	1LE1001-0B.3 1LE1002-0B.6	2, 4																			92			
71 M	1LE1001, 1LE1002	2, 4, 6, 8	112	30.5	**132**	145	**111**	–	88	–	75	37.5	90	27	–	106	18	32	18	45	83	**71**	7	40
80 M	1LE1001 1LE1041	2, 4, 6	125	30.5	**150**	159	**121.5**	121.5	96.5	96.5	93	43	100	32	32	118	23	–	18[1]	50	113	**80**	8	41
90 S		2, 4, 6	140	30.5	**165**	178	**126**	126	101.5	101.5	93	43	100	33	54	143	22.5	–	18[1]	56	174	**90**	10	47
90 L		2, 4, 6	140	30.5	**165**	178	**126**	126	101.5	101.5	93	43	125	33	54	143	22.5	–	18[1]	56	174	**90**	10	47
100 L	All	2, 4, 6, 8	160	42	**196**	198	**166**	166	125.5	125.5	135	63.5	140	37.5	37.5	176	33.5	50	25	63	141	**100**	12	45
112 M	All	2, 4, 6, 8	190	46	**226**	222	**177**	177	136.5	136.5	135	63.5	140	37.5	37.5	176	26	50	25	70	130	**112**	12	52
132 S	All	2, 4, 6, 8	216	53	**256**	262	**202**	202	159.5	159.5	155	70.5	140	38	76[3]	218[4]	26.5	48	24	89	167	**132**	15	69
132 M	All	2, 4, 6, 8	216	53	**256**	262	**202**	202	159.5	159.5	155	70.5	178	38	76	218	26.5	48	24	89	179	**132**	15	69
160 M	All	2, 4, 6, 8	254	60	**300**	314	**236.5**	236.5	190	190	175	77.5	210	44	89[5]	300[6]	47	57	28.5	108	192	**160**	18	85
160 L	All	2, 4, 6, 8	254	60	**300**	314	**236.5**	236.5	190	190	175	77.5	254	44	89	300	47	57	28.5	108	148[2]	**160**	18	85
180 M	All	2, 4, 6, 8	279	65	**339**	356	**259**	259	212.5	212.5	175	77.5	241	80	100	328	30	57	28.5	121	232	**180**	20	95
180 L	All	2, 4, 6, 8	279	65	**339**	356	**259**	259	212.5	212.5	175	77.5	279	80	100	328	30	57	28.5	121	194	**180**	20	95
200 L	All	2, 4, 6, 8	318	70	**378**	396	**296**	296	238	238	225	102.5	305	90	100	355	45	75	37.5	133	202	**200**	25	108

1) Only one termination hole available.
2) Only for pole-changing types 1LE1011-1DP6 and 1LE1012-1DQ6 the dimension CA* is 208 mm.
3) With screwed-on feet, dimension BA' is 38 mm.
4) With screwed-on feet, dimension BB is 180 mm.
5) With screwed-on feet, dimension BA' is 44 mm.
6) With screwed-on feet, dimension BB is 256 mm.

© Innomotics 2024

Dimensional drawings

Type of construction IM B35

For flange dimensions, see page 1/59 (**Z** = the number of retaining holes)

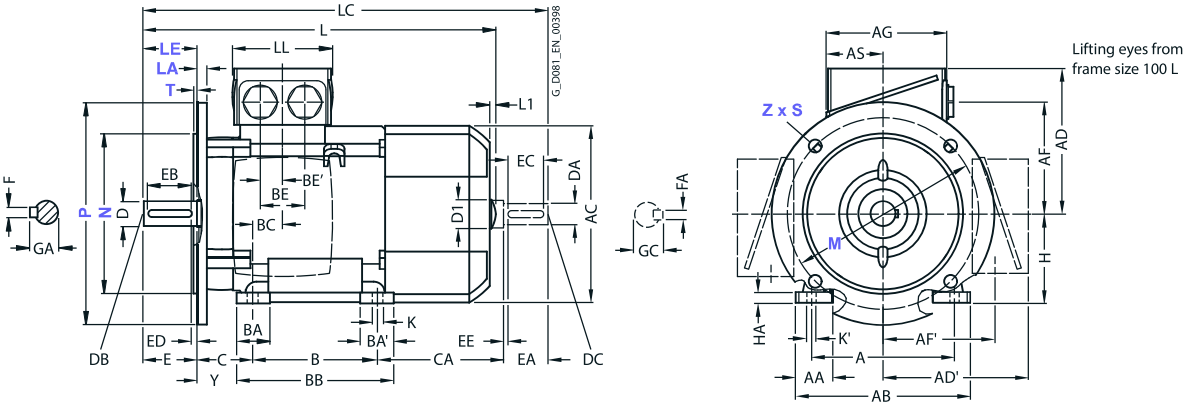

Type of construction IM B14

For flange dimensions, see page 1/59 (**Z** = the number of retaining holes)

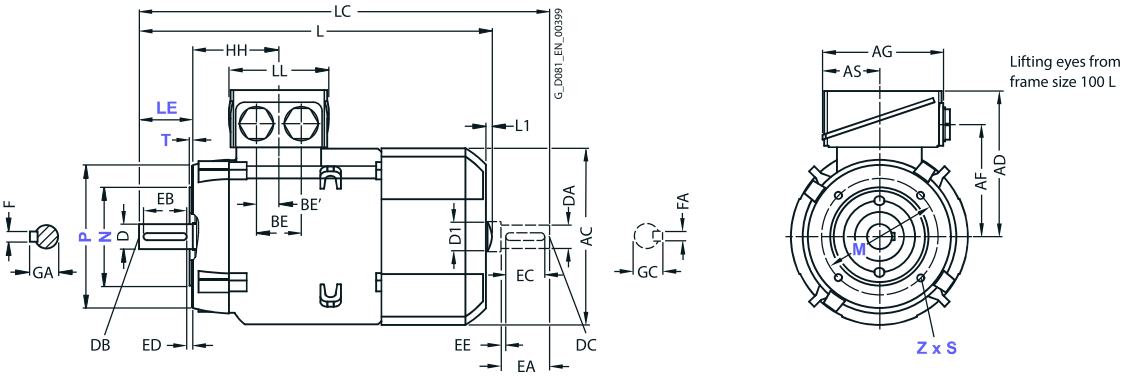

For motor			Dimension designation acc. to **IEC**								DE shaft extension							NDE shaft extension						
Frame size	Motor type 1LE100. 1LE101. 1LE1021	No. of poles	HH	K	K'	**L**[1]	L1	D1	LC	LL	D	DB	E	EB	ED	F	GA	DA	DC	EA	EC	EE	FA	GC
63 M	1LE100.-0B.2 1LE1002-0B.3	2, 4, 6	69.5	7	10	**202.5**[4]	–	–	232[4]	75	11	M4	23	16	3.5	4	12.5	11	M4	23	16	3.5	4	12.5
	1LE1001-0B.3 1LE1002-0B.6	2, 4				**228.5**			258															
71 M	1LE1001, 1LE1002	2, 4, 6, 8	63.5	7	10	**240**	–	–	278	75	14	M5	30	22	4	5	16	14	M5	30	22	4	5	16
80 M	1LE1001 1LE1041	2, 4, 6	73	9.5	13.5	**292**	–	–	342.5	79	19	M6	40	32	4	6	21.5	19	M6	40	32	4	6	21.5
90 S		2, 4, 6	78.5	10	14	**347**	–	–	405	79	24	M8	50	40	5	8	27	19	M6	40	32	4	6	21.5
90 L		2, 4, 6	78.5	10	14	**347**	–	–	405	79	24	M8	50	40	5	8	27	19	M6	40	32	4	6	21.5
100 L	All	2, 4, 6, 8	96.5	12	16	**395.5**	7	32	454	112	28	M10	60	50	5	8	31	24	M8	50	40	5	8	27
112 M	All	2, 4, 6, 8	96	12	16	**389** **414**	7	32	450 475	112	28	M10	60	50	5	8	31	24	M8	50	40	5	8	27
132 S	All	2, 4, 6, 8	115.5	12	16	**465**	8.5	39	535.5	130	38	M12	80	70	5	10	41	28	M10	60	50	5	8	31
132 M	All	2, 4, 6, 8	115.5	12	16	**465**	8.5	39	535.5	130	38	M12	80	70	5	10	41	28	M10	60	50	5	8	31
160 M	All	2, 4, 6, 8	155	15	19	**604**	10	45	730	145	42	M16	110	90	10	12	45	42	M16	110	90	10	12	45
160 L	All	2, 4, 6, 8	155	15	19	**604**[2]	10	45	730[3]	145	42	M16	110	90	10	12	45	42	M16	110	90	10	12	45
180 M	All	2, 4, 6, 8	151	14.5	19	**698**	–	–	814	145	48	M16	110	100	5	14	52	48	M16	110	100	5	14	52
180 L	All	2, 4, 6, 8	151	14.5	19	**698**	–	–	814	145	48	M16	110	100	5	14	52	48	M16	110	100	5	14	52
200 L	All	2, 4, 6, 8	178	18.5	25	**746**	–	–	860	185	55	M20	110	100	5	16	59	55	M20	110	100	5	16	59

1) The length is specified as far as the tip of the fan cover.
2) Only for pole-changing types 1LE1011-1DP6 and 1LE1012-1DQ6 the dimension L is 664 mm.
3) Only for pole-changing types 1LE1011-1DP6 and 1LE1012-1DQ6 the dimension LC is 790 mm.
4) For 1LE1002-0B.3 with the type of construction code letters (14th position of the article number) **F**, **G**, **H** (IM B5, IM V1 without protective cover, IM V3) is dimension L 228.5 mm. Dimension LC is 258 mm.

© Innomotics 2024

Innomotics GP and Innomotics SD standard motors

IE1, IE2 – self-ventilated with increased power · Frame sizes 80 M to 200 L

Dimensional drawings

Type of construction IM B3

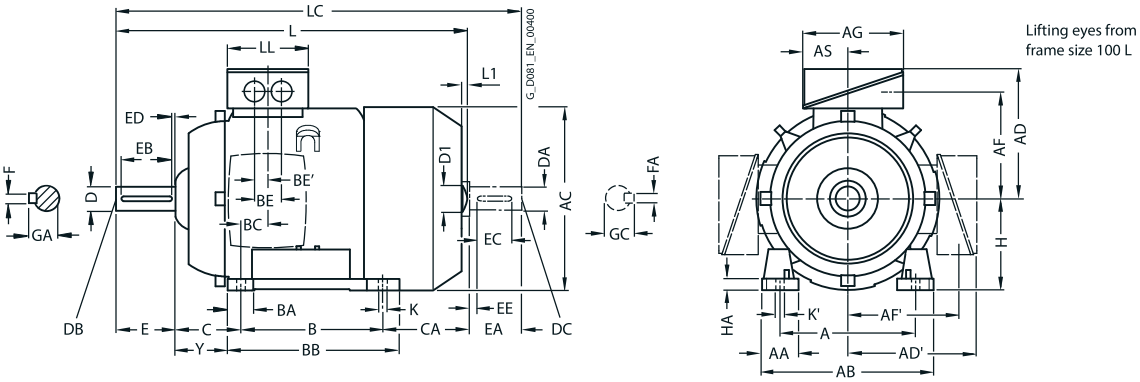

3

Types of construction IM B5 and IM V1

For flange dimensions, see page 1/59 (**Z** = the number of retaining holes)

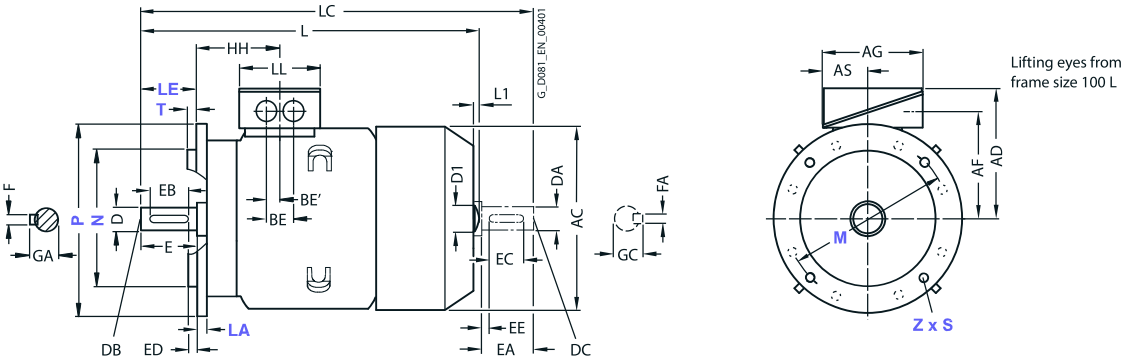

For motor			Dimension designation acc. to **IEC**																					
Frame size	Motor type 1LE1001 1LE1002 1LE1041	No. of poles	A	AA	**AB**	AC	**AD**	AD'	AF	AF'	AG	AS	B	BA	BA'	BB	BC	BE	BE'	C	CA	**H**	HA	Y
80 M	All	2, 4	125	30.5	**150**	159	**121.5**	121.5	96.5	96.5	93	43	100	32	32	118	23	–	18[1]	50	148	**80**	8	41
90 L	All	2, 4	140	30.5	**165**	178	**126**	126	101.5	101.5	93	43	125	33	54	143	22.5	–	18[1]	56	174	**90**	10	47
100 L	All	2, 4, 6, 8	160	42	**196**	198	**166**	166	125.5	125.5	135	63.5	140	37.5	37.5	176	33.5	50	25	63	176	**100**	12	45
112 M	All	2, 4, 6, 8	190	46	**226**	222	**177**	177	136.5	136.5	135	63.5	140	37.5	37.5	176	26	50	25	70	155	**112**	12	52
132 M	All	2, 4, 6, 8	216	53	**256**	262	**202**	202	159.5	159.5	155	70.5	178	38	76	218	26.5	48	24	89	179	**132**	15	69
160 L	All	2, 4, 6, 8	254	60	**300**	314	**236.5**	236.5	190	190	175	77.5	254	44	89	300	47	57	28.5	108	208	**160**	18	85
180 L	1LE1001 1LE1002	2, 4, 6, 8	279	65	**339**	356	**259**	259	212.5	212.5	175	77.5	279	80	100	328	30	57	28.5	121	194	**180**	20	95
200 L	1LE1001 1LE1002	2, 4, 6, 8	318	70	**378**	396	**296**	296	238	238	225	102.5	305	90	100	355	45	75	37.5	133	202	**200**	25	108

[1] Only one termination hole available.

© Innomotics 2024

Innomotics GP and Innomotics SD standard motors

IE1, IE2 – self-ventilated with increased power · Frame sizes 80 M to 200 L

Dimensional drawings

Type of construction IM B35

For flange dimensions, see page 1/59 (**Z** = the number of retaining holes)

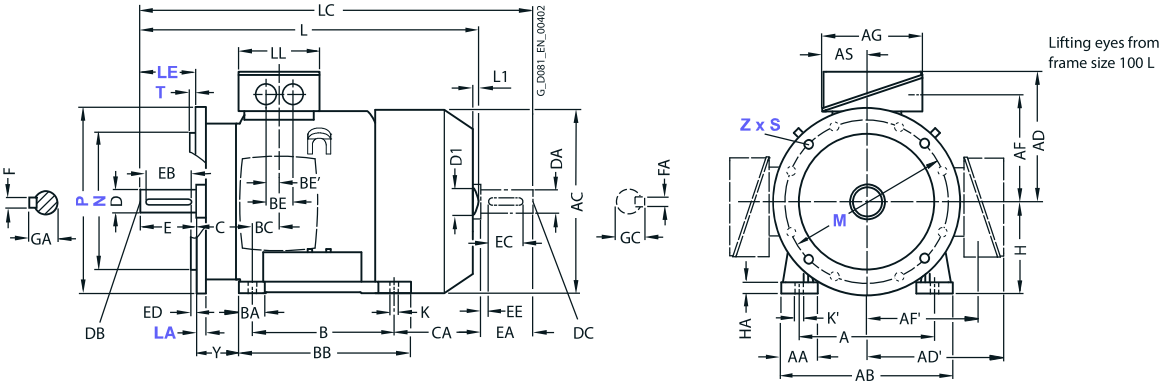

Type of construction IM B14

For flange dimensions, see page 1/59 (**Z** = the number of retaining holes)

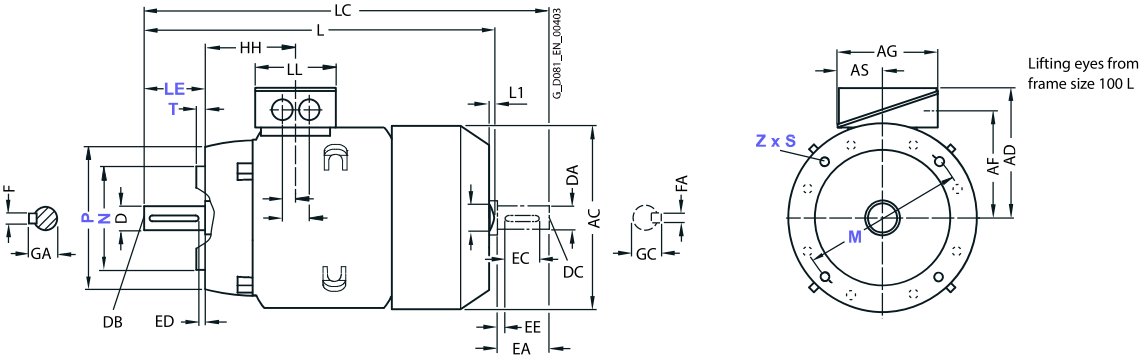

For motor			Dimension designation acc. to **IEC**								DE shaft extension							NDE shaft extension						
Frame size	Motor type 1LE1001 1LE1002 1LE1041	No. of poles	HH	K	K'	**L** [1]	L1	D1	LC	LL	D	DB	E	EB	ED	F	GA	DA	DC	EA	EC	EE	FA	GC
80 M	All	2, 4	73	9.5	13.5	**327**	327	–	378	79	19	M6	40	32	4	6	21.5	19	M6	40	32	4	6	21.5
90 L	All	2, 4	78.5	10	14	**387**	–	–	445	79	24	M8	50	40	5	8	27	19	M6	40	32	4	6	21.5
100 L	All	2, 4, 6, 8	96.5	12	16	**430.5**	7	32	489	112	28	M10	60	50	5	8	31	24	M8	50	40	5	8	27
112 M	All	2, 4, 6, 8	96	12	16	**414**	7	32	475	112	28	M10	60	50	5	8	31	24	M8	50	40	5	8	27
132 M	All	2, 4, 6, 8	115.5	12	16	**515**	8.5	39	585.5	130	38	M12	80	70	5	10	41	28	M10	60	50	5	8	31
160 L	All	2, 4, 6, 8	155	15	19	**664**	10	45	790	145	42	M16	110	90	10	12	45	42	M16	110	90	10	12	45
180 L	1LE1001 1LE1002	2, 4, 6	151	14.5	19	**698**	–	–	814	145	48	M16	110	100	5	14	52	48	M16	110	100	5	14	52
200 L	1LE1001 1LE1002	2, 4, 6	178	18.5	25	**746**	–	–	860	185	55	M20	110	100	5	16	59	55	M20	110	100	5	16	59

[1] The length is specified as far as the tip of the fan cover.

© Innomotics 2024

Innomotics GP and Innomotics SD standard motors

IE1, IE2 – forced-air/naturally cooled · Frame sizes 80 M to 200 L

Dimensional drawings

Type of construction IM B3

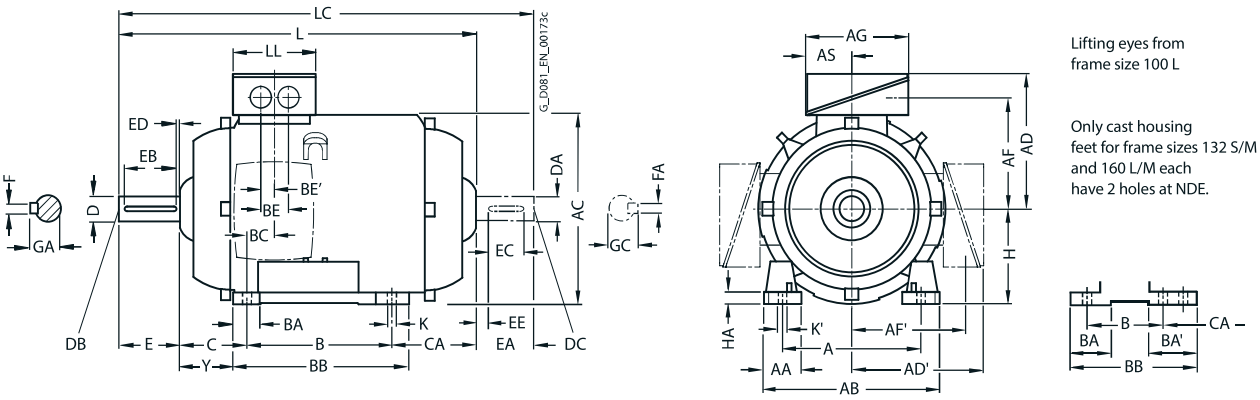

Types of construction IM B5 and IM V1

For flange dimensions, see page 1/59 (**Z** = the number of retaining holes)

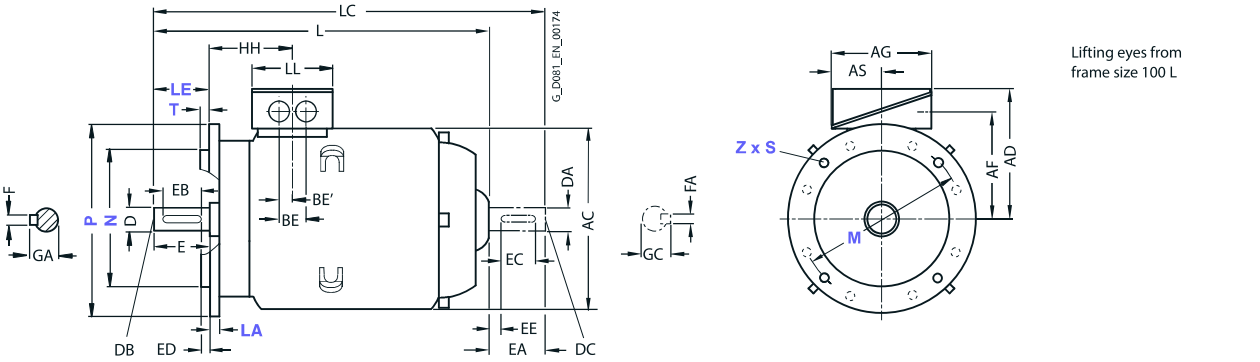

For motor			Dimension designation acc. to **IEC**																				
Frame size	Motor type 1LE100. 1PC100. 1LE1021	No. of poles	A	AA	**AB**	AC	**AD**	AD'	AF	AF'	AG	AS	B	BA	BA'	BB	BC	BE	BE'	C	CA	**H**	HA	Y
80 M	1LE1001	2, 4, 6	125	30.5	**150**	159	**121.5**	121.5	96.5	96.5	93	43	100	32	32	118	23	–	18[5]	50	70.5	**80**	8	41
	1LE1021	2, 4, 6					**149.5**	149.5	112.5	112.5	119.5	61.5												
90 S	1LE1001	2, 4, 6	140	30.5	**165**	178	**126**	126	101.5	101.5	93	43	100	33	54	143	22.5	–[5]	18[5]	56	103	**90**	10	47
	1LE1021	2, 4, 6					**154.5**	154.5	117.5	117.5	119.5	61.5												
90 L	1LE1001	2, 4, 6	140	30.5	**165**	178	**126**	126	101.5	101.5	93	43	125	33	54	143	22.5	–[5]	18[5]	56	78	**90**	10	47
	1LE1021	2, 4, 6					**154.5**	154.5	117.5	117.5	119.5	61.5												
100 L	All	2, 4, 6, 8	160	42	**196**	198	**166**	166	125.5	125.5	135	63.5	140	37.5	37.5	176	33.5	50	25	63	63	**100**	12	45
112 M	All	2, 4 6, 8	190	46	**226**	222	**177**	177	136.5	136.5	135	63.5	140	37.5	37.5	176	26	50	25	70	45 70	**112**	12	52
132 S	All	2, 4, 6, 8	216	53	**256**	261	**202**	202	159.5	159.5	155	70.5	140	38	76[1]	218[2]	26.5	48	24	89	77	**132**	15	69
132 M	All	2, 4, 6, 8	216	53	**256**	261	**202**	202	159.5	159.5	155	70.5	178	38	76	218	26.5	48	24	89	39	**132**	15	69
160 M	All	2, 4, 6, 8	254	60	**300**	314	**236.5**	236.5	190	190	175	77.5	210	44	89[3]	300[4]	47	57	28.5	108	92	**160**	18	85
160 L	All	2, 4, 6, 8	254	60	**300**	314	**236.5**	236.5	190	190	175	77.5	254	44	89	300	47	57	28.5	108	48	**160**	18	85
180 M	1LE1001 1LE1021	2, 4, 6, 8	279	65	**339**	356	**259**	259	212.5	212.5	175	77.5	241	80	100	328	30	57	28.5	121	124	**180**	20	95
200 L	1LE1001 1LE1021	2, 4, 6, 8	318	70	**378**	396	**296**	296	238	238	225	102.5	305	90	100	355	45	75	37.5	133	101	**200**	25	108

1) With screwed-on feet, dimension BA' is 38 mm.
2) With screwed-on feet, dimension BB is 180 mm.
3) With screwed-on feet, dimension BA' is 44 mm.
4) With screwed-on feet, dimension BB is 256 mm.
5) Only one termination hole available, except for 1LE1021. In this case, dimension BE is 32 mm.

© Innomotics 2024

Innomotics GP and Innomotics SD standard motors

IE1, IE2 – forced-air/naturally cooled · Frame sizes 80 M to 200 L

Dimensional drawings

Type of construction IM B35

For flange dimensions, see page 1/59 (**Z** = the number of retaining holes)

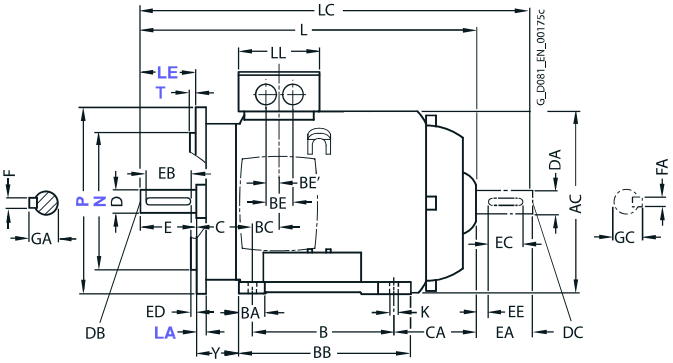

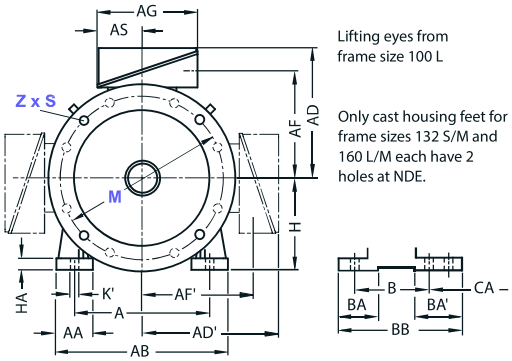

Type of construction IM B14

For flange dimensions, see page 1/59 (**Z** = the number of retaining holes)

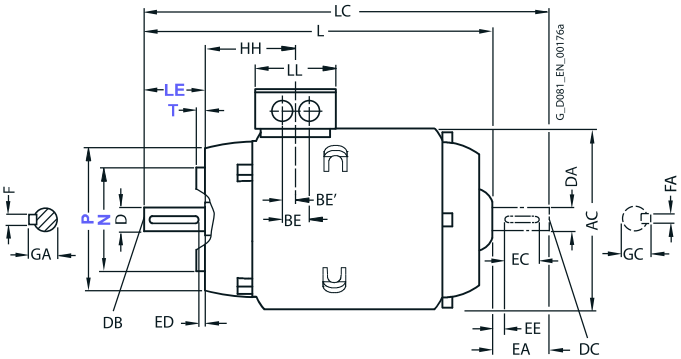

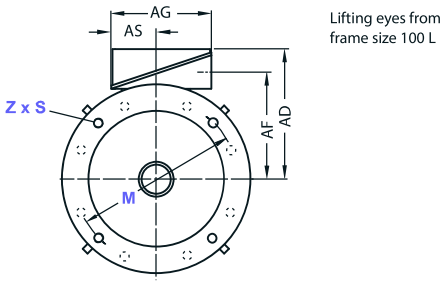

For motor			Dimension designation acc. to **IEC**						DE shaft extension							NDE shaft extension						
Frame size	Motor type 1LE100. 1PC100. 1LE1021	No. of poles	HH	K	K'	**L**	LC	LL	D	DB	E	EB	ED	F	GA	DA	DC	EA	EC	EE	FA	GC
80 M	1LE1001	2, 4, 6	73	9.5	13.5	**253**	300.5	79	19	M6	40	32	4	6	21.5	19	M6	40	32	4	6	21.5
	1LE1021	2, 4, 6						123														
90 S	1LE1021	2, 4, 6	78.5	10	14	**294.5**	349	79	24	M8	50	40	5	8	27	19	M6	40	32	4	6	21.5
	1LE1021	2, 4, 6						123														
90 L	1LE1021	2, 4, 6	78.5	10	14	**294.5**	349	123	24	M8	50	40	5	8	27	19	M6	40	32	4	6	21.5
	1LE1021	2, 4, 6						123														
100 L	All	2, 4, 6, 8	96.5	12	16	**324**	376	112	28	M10	60	50	5	8	31	24	M8	50	40	5	8	27
112 M	All	2, 4 6, 8	96	12	16	**311** **336**	365 390	112	28	M10	60	50	5	8	31	24	M8	50	40	5	8	27
132 S	All	2, 4, 6, 8	115.5	12	16	**380.5**	446	130	38	M12	80	70	5	10	41	28	M10	60	50	5	8	31
132 M	All	2, 4, 6, 8	115.5	12	16	**380.5**	446	130	38	M12	80	70	5	10	41	28	M10	60	50	5	8	31
160 M	All	2, 4, 6, 8	155	15	19	**510**	630	145	42	M16	110	90	10	12	45	42	M16	110	90	10	12	45
160 L	All	2, 4, 6, 8	155	15	19	**510**	630	145	42	M16	110	90	10	12	45	42	M16	110	90	10	12	45
180 M	1LE1001 1LE1021	2, 4, 6, 8	151	14.5	19	**698**	706	145	48	M16	110	100	5	14	52	48	M16	110	100	5	14	51.5
200 L	1LE1001 1LE1021	2, 4, 6, 8	178	18.5	25	**746**	759	185	55	M20	110	100	5	16	59	55	M20	110	100	100	16	59

© Innomotics 2024

Innomotics GP and Innomotics SD standard motors

IE4 – self-ventilated · Frame sizes 100 L to 160 L

Dimensional drawings

Type of construction IM B3

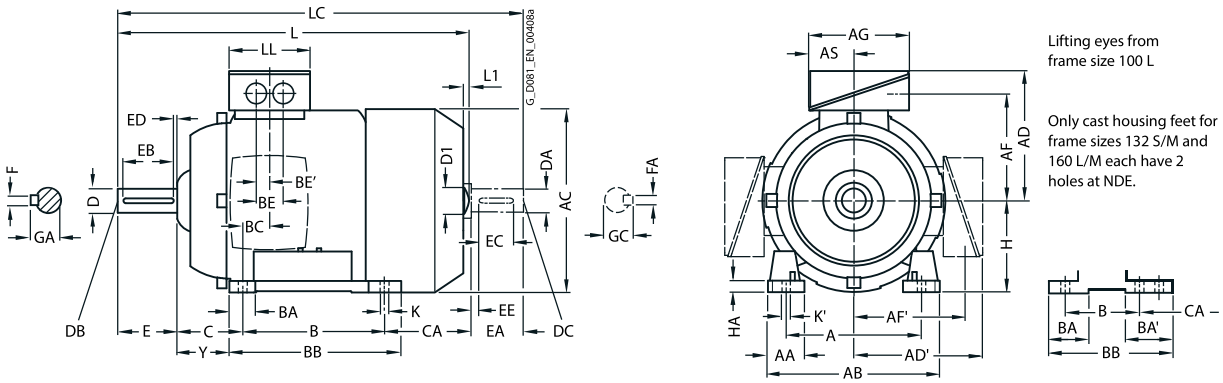

Types of construction IM B5 and IM V1

For flange dimensions, see page 1/59 (**Z** = the number of retaining holes)

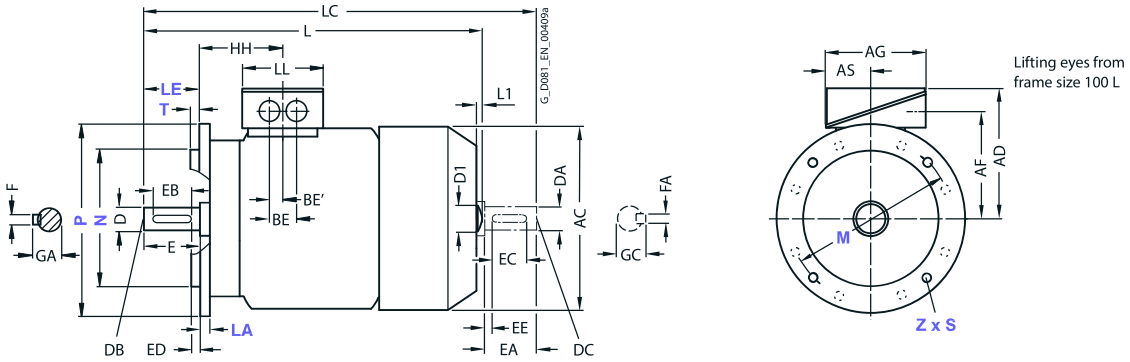

For motor			Dimension designation acc. to **IEC**																					
Frame size	Motor type 1LE1504- 1LE1604-	No. of poles	A	AA	**AB**	AC	**AD**	AD'	AF	AF'	AG	AS	B	BA	BA'	BB	BC	BE	BE'	C	CA	**H**	HA	Y
100 L	1AA4 1AB4 1AB5	2 4 4	160	42	**196**	217	**193**	193	147	147	163	80.5	140	48	48	176	37.5	48	24	63	176	**100**	12	45
112 M	1BA2 1BB2	2 4	190	46	**226**	239	**195**	195	150	150	163	80.5	140	48	48	176	30	48	24	70	155	**112**	12	52
132 S	1CA0 1CA1, 1CB0	2 2, 4	216	53	**256**	281	**214.5**	214.5	169	169	163	80.5	140	52[1]	89[5] –	218[2]	26.5	48	24	89	130 178.5	**132**	15	69
132 M	1CB2	4	216	53	**256**	281	**214.5**	214.5	169	169	163	80.5	178	52[1]	89[6]	218	26.5	48	24	89	178.5	**132**	15	69
160 M	1DA2 1DA3,1DB2	2 2, 4	254	60	**300**	333.5	**261**	261	213	213	190	92	210	73[3]	117[7]	300[4]	37	60	30	108	148	**160**	18	85
160 L	1DA4 1DB4	2 4	254	60	**300**	333.5	**261**	261	213	213	190	92	254	73[3]	117[8]	300	37	60	30	108	208	**160**	18	85

1) With screwed-on feet, dimension BA is 41 mm.
2) With screwed-on feet, dimension BB is 180 mm.
3) With screwed-on feet, dimension BA is 51 mm.
4) With screwed-on feet, dimension BB is 256 mm.
5) With screwed-on feet, dimension BA' is 41 mm.
6) With screwed-on feet, dimension BA' is 79 mm.
7) With screwed-on feet, dimension BA' is 51 mm.
8) With screwed-on feet, dimension BA' is 95 mm.

© Innomotics 2024

Dimensional drawings

Type of construction IM B35

For flange dimensions, see page 1/59 (**Z** = the number of retaining holes)

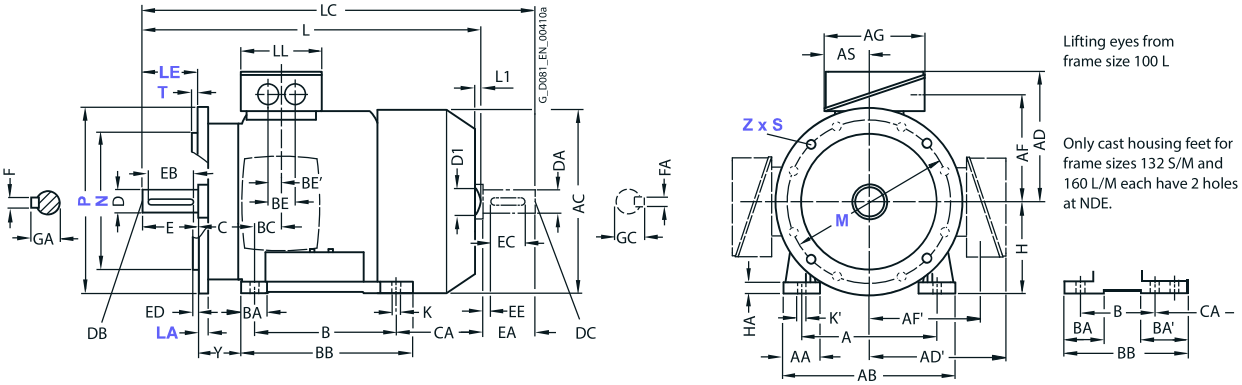

Type of construction IM B14

For flange dimensions, see page 1/59 (**Z** = the number of retaining holes)

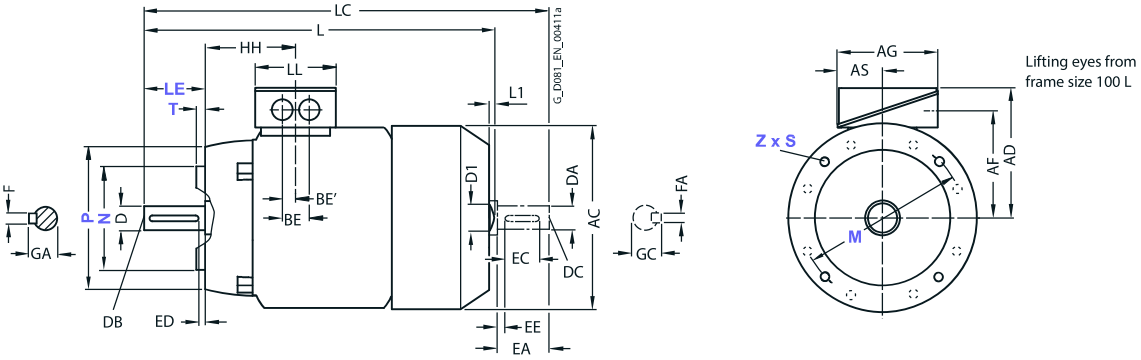

For motor			Dimension designation acc. to **IEC**								DE shaft extension							NDE shaft extension						
Frame size	Motor type 1LE1504- 1LE1604-	No. of poles	HH	K	K'	**L**[1]	L1[2]	D1	LC	LL	D	DB	E	EB	ED	F	GA	DA	DC	EA	EC	EE	FA	GC
100 L	1AA4 1AB4 1AB5	2 4 4	100.5	12	16	**432.5** **482.5**	7 7	32	489 529	134	28	M10	60	50	5	8	31	24	M8	50	40	5	8	27
112 M	1BA2 1BB2	2 4	100.5	12	16	**415.5** **465.5**	7	32	475 515	134	28	M10	60	50	5	8	31	24	M8	50	40	5	8	27
132 S	1CA0 1CA1, 1CB0	2 2, 4	115.5	12	16	**466.5** **516.5**	8.5	39	535.5 585.5	134	38	M12	80	70	5	10	41	28	M10	60	50	5	8	31
132 M	1CB2	4	115.5	12	16	**516.5**	8.5	39	585.5	134	38	M12	80	70	5	10	41	28	M10	60	50	5	8	31
160 M	1DA2 1DA3, 1DB2	2 2, 4	145	15	19	**606** **666**	10	45	730	165	42	M16	110	90	10	12	45	42	M16	110	90	10	12	45
160 L	1DA4 1DB4	2 4	145	15	19	**666**	10	45	790	165	42	M16	110	90	10	12	45	42	M16	110	90	10	12	45

[1] For 1LE16 motors less dimension L1.
[2] Only for 1LE15 motors.

© Innomotics 2024

Innomotics GP and Innomotics SD standard motors

IE4 – self-ventilated · Frame sizes 180 M to 315 L

Dimensional drawings

Type of construction IM B3

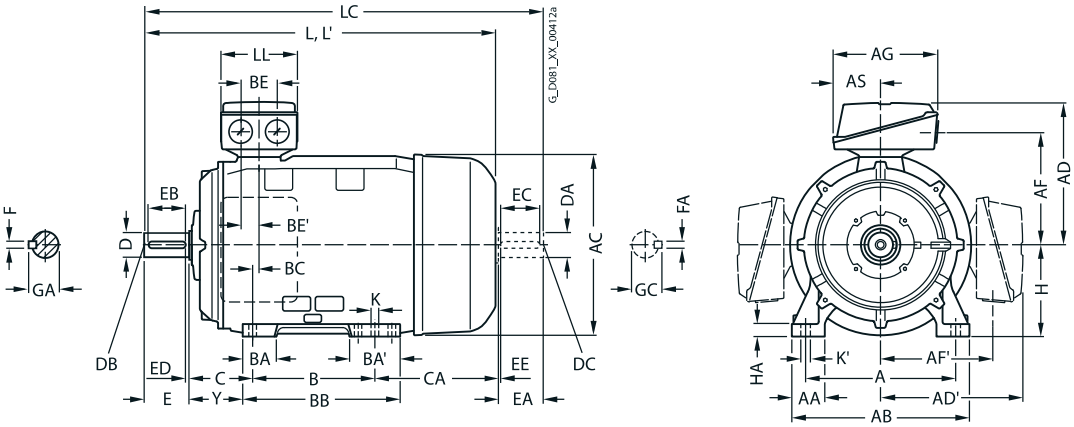

Types of construction IM B5 and IM V1

For flange dimensions, see page 1/59 (**Z** = the number of retaining holes)

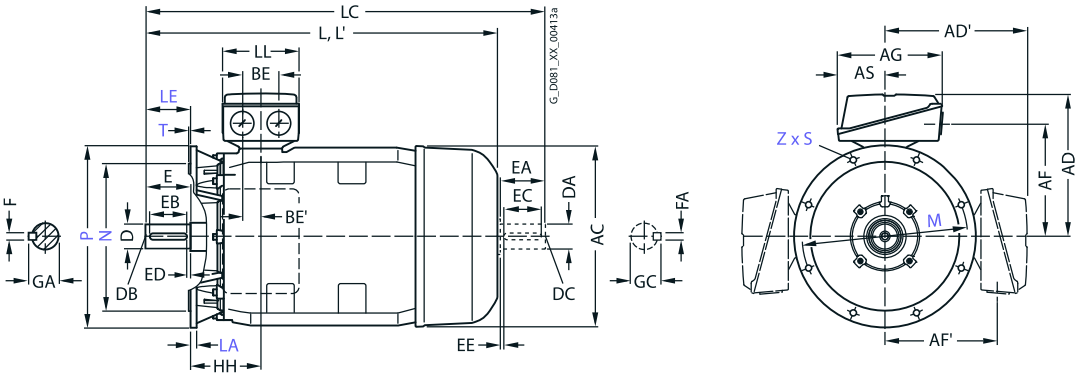

For motor			Dimension designation acc. to **IEC**																		
Frame size	Motor type 1LE1504- 1LE1604-	No. of poles	A	AA	**AB**	AC	**AD**	AD'	AF	AF'	AG	AS	B*	BA	BA'	BB	BC	BE	BE'	C	CA*
180 M	1EA2	2	279	65	**339**	356	**286**	286	234	234	189	92	241/	85	120	328	34	60	30	121	202
180 M	1EB2	4											279								
180 L	1EB4	4																			
200 L	2AA4	2	318	70	**378**	396	**315**	315	258.5	258.5	265	112	305	104	104	355	31	85	42.5	133	177
	2AA5, 2AB5	2, 4																			
225 S	2BB0	4	356	80	**436**	449	**338**	338	282	282	266	112	286	92	117	361	15	85	42.5	149	218
225 M	2BA2	2	356	80	**436**	449	**338**	338	282	282	266	112	311	92	117	361	15	85	42.5	149	253
	2BB2	4																			
250 M	2CA2	2	406	100	**490**	497	**410**	410	322	322	319	145	349	102	102	409	24	110	55	168	230
	2CB2	4																			
280 S	2DA0	2	457	100	**540**	551	**433**	433	345	345	319	145	368	101	152	479	20	110	55	190	267
	2DB0	4																			
280 M	2DA2	2	457	100	**540**	551	**433**	433	345	345	319	145	419	101	152	479	20	110	55	190	216
	2DB2	4																			326
315 S	3AA0	2	508	120	**610**	616	**515**	515	404	404	374	164	406	113	170	527	22	110	55	216	295
315 M[2]	3AB0	4	508	120	**610**	616	**515**	515	404	404	374	164	457	113	170	578	22	110	55	216	295
315 M[1]	3AA2	2																			409
	3AB2	4																			
315 L[1]	3AA4	2	508	120	**610**	616	**515**	515	404	404	374	164	508	113	170	578	22	110	55	216	358
	3AB4	4																			
	3AA5	2												176	227	648					513
	3AB5	4																			

* Please note that version 3AB0 does not comply with EN 50347 with respect to assignment of this dimension to the frame size.

[1] With terminal box position right, terminal box left, and with order code **H01** only screwed-on feet with 3 drilled holes with dimension "B" (406, 457, and 508 mm). The dimension "BB" will then be 666 mm.

[2] 1LE1504-3AB0 and 1LE1604-3AB0 4-pole motors cannot be constructed in standard frame size 315 S because they require the longer housing of frame size 315 M in order to achieve the requisite efficiency levels. The foot clearance dimension "B" therefore changes from 406 to 457 mm. The motors comply with standard IEC 60034, but not with standard EN 50347 in this respect.

© Innomotics 2024

Innomotics GP and Innomotics SD standard motors

IE4 – self-ventilated · Frame sizes 180 M to 315 L

Dimensional drawings

Type of construction IM B35

For flange dimensions, see page 1/59 (**Z** = the number of retaining holes)

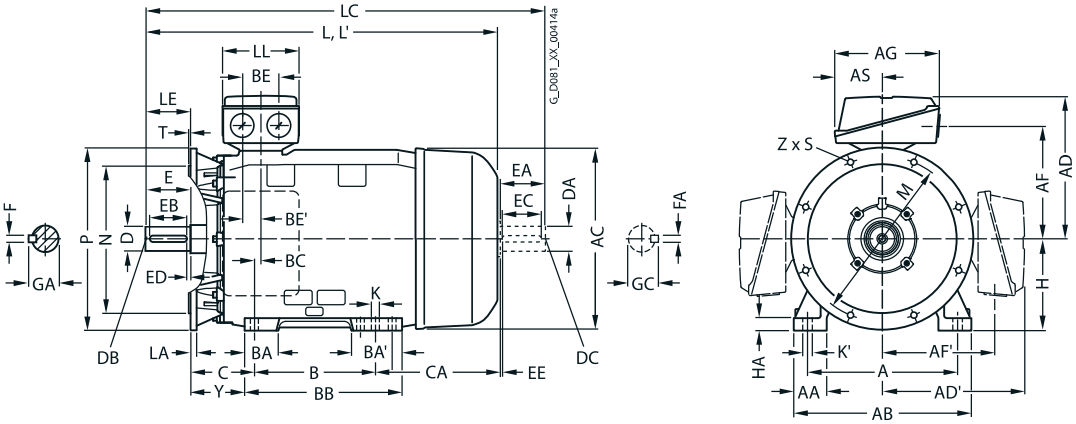

For motor		Dimension designation acc. to **IEC**									DE shaft extension							NDE shaft extension						
Motor type 1LE1504- 1LE1604-	No. of poles	**H**	HA	Y	HH	K	K'	**L**	LC[1]	LL	D	DB	E	EB	ED	F	GA	DA	DC	EA	EC	EE	FA	GC
1EA2	2	**180**	20	95	155	15	19	**698**	814	164	48	M16	110	100	5	14	51.5	48	M16	110	100	5	14	51.5
1EB2	4								784															
1EB4	4								814															
2AA4	2	**200**	25	108	164	19	25	**746**	860	197	55	M20	110	100	5	16	59	55	M20	110	100	5	16	59
2AA5, 2AB5	2, 4							**746**																
2BB0	4	**225**	34	124	164	19	25	**848**	903	197	60	M20	140	125	10	18	64	55	M20	110	100	5	16	59
2BA2	2	**225**	34	124	164	19	25	**818**	933	197	55	M20	110	100	5	16	59	48	M16	110	100	5	14	51.5
2BB2	4							**928**	963		60		140	125	10	18	64	55	M20				16	59
2CA2	2	**250**	40	138	192	24	30	**887**	1002	233	60	M20	140	125	10	18	64	55	M20	110	100	5	16	59
2CB2	4							**957**	1032		65						69	60		140	125	10	18	64
2DA0	2	**280**	40	160	210	24	30	**1070**	1105	233	65	M20	140	125	10	18	69	60	M20	140	125	10	18	64
2DB0	4										75					20	79.5	65						69
2DA2	2	**280**	40	160	210	24	30	**1070**	1215	233	65	M20	140	125	10	18	69	60	M20	140	125	10	18	64
2DB2	4										75					20	79.5	65						69
3AA0	2	**315**	50	181	238	28	35	**1052**	1197	299	65	M20	140	125	10	18	69	60	M20	140	125	10	18	64
3AB0	4	**315**	50	181	238	28	35	**1247**	1392	299	80	M20	170	140	25	22	85	70	M20	140	125	10	20	74.5
3AA2	2							**1217**	1362		65		140	125	10	18	69	60					18	64
3AB2	4							**1247**	1392		80		170	140	25	22	85	70					20	74.5
3AA4	2	**315**	50	181	238	28	35	**1217**	1362	299	65	M20	140	125	10	18	69	60	M20	140	125	10	18	64
3AB4	4							**1402**	1392		80		170	140	25	22	85	70					20	74.5
3AA5	2			146				**1372**	1517		65		140	125	10	18	69	60					18	64
3AB5	4							**1402**	1547		80		170	140	25	22	85	70					20	74.5

[1] In the low-noise version, a second shaft extension and/or mounted encoder is not possible.

© Innomotics 2024

Innomotics GP and Innomotics SD standard motors

IE3, NEMA Premium Efficient – self-ventilated · Frame sizes 71 M to 160 L

Dimensional drawings

Type of construction IM B3

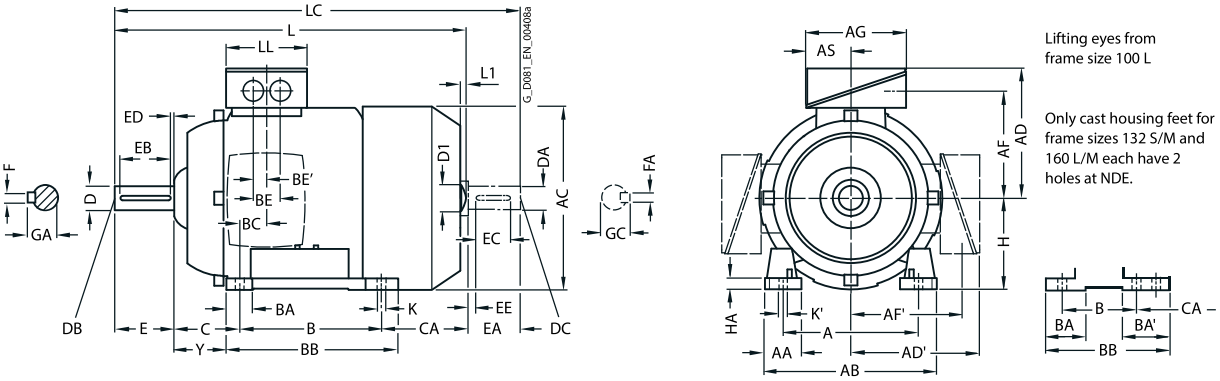

3

Types of construction IM B5 and IM V1

For flange dimensions, see page 1/59 (**Z** = the number of retaining holes)

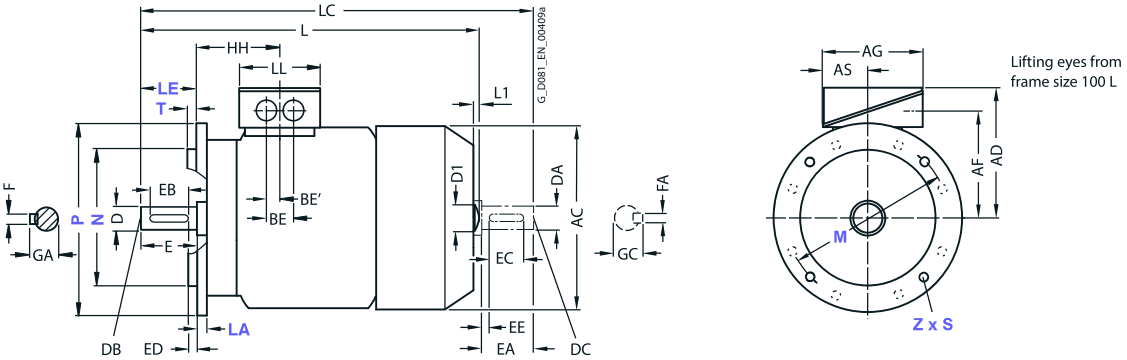

For motor			Dimension designation acc. to **IEC**																					
Frame size	Motor type 1LE15.3- 1LE16.3-	No. of poles	A	AA	**AB**	AC	**AD**	AD'	AF	AF'	AG	AS	B	BA	BA'	BB	BC	BE	BE'	C	CA	**H**	HA	Y
71 M	1LE15.3- 0..0, 0..2 0..3	2, 4, 6	112	30,5	**132**	145	**149**	149	112	112	126	62	90	32	32	106	21	36	18	45	83	**71**	7	37
80 M	1LE15.3- 0..0, 0..2, 0..3, 0..6	2, 4, 6	125	30,5	**150**	162	**159**	159	122	122	126	62	100	32	32	118	22,5	36	18	50	112,5 148	**80**	8	41
90 S	1LE15.3- 0..0, 0..2, 0..3	2, 4, 6	140	30,5	**165**	180	**164**	164	127	127	126	62	100	33	54	143	24,5	36	18	56	159	**90**	11	47
90 L	1LE15.3-0..6	2, 4, 6	140	30,5	**165**	180	**164**	164	127	127	126	62	125	33	54	143	24,5	36	18	56	174	**90**	11	47
100 L	1AA4, 1AA6, 1AB4, 1AB5, 1AB6 1AC4	2, 4 6	160	42	**196**	217	**193**	193	147	147	163	80,5	140	48	48	176	37,5	48	24	63	176 216 176	**100**	12	45
112 M	1BA2, 1BA6, 1BB2, 1BC2, 1BD2 1BB6	2, 4, 6	190	46	**226**	239	**195**	195	150	150	163	80,5	140	48	48	176	30	48	24	70	155 200	**112**	12	52
132 S	1CA0, 1CC0, 1CD0 1CA1, 1CA6, 1CA7, 1CB0	2, 6, 8 2, 4	216	53	**256**	281	**214,5**	214,5	169	169	163	80,5	140	52[5]	89[1] –	218[2]	26,5	48	24	89	166,5 178,5	**132**	15	69
132 M	1CC2 1CB2, 1CC3, 1CD2 1CB6	6 4, 6, 8 4	216	53	**256**	281	**214,5**	214,5	169	169	163	80,5	178	52[5]	89[1] –	218	26,5	48	24	89	128,5 178,5	**132**	15	69
160 M	alle	2, 4, 6, 8	254	60	**300**	333,5	**261**	261	213	213	190	92	210	73[6]	117[3]	300[4]	37	60	30	108	192	**160**	18	85
160 L	alle	2, 4, 6, 8	254	60	**300**	333,5	**261**	261	213	213	190	92	254	73[6]	117[3]	300	37	60	30	108	148	**160**	18	85

1) With screwed-on feet, dimension BA' is 41 mm.
2) With screwed-on feet, dimension BB is 180 mm.
3) With screwed-on feet, dimension BA' is 51 mm.
4) With screwed-on feet, dimension BB is 256 mm.
5) With screwed-on feet, dimension BA is 41 mm.
6) With screwed-on feet, dimension BA is 51 mm.

© Innomotics 2024

Innomotics GP and Innomotics SD standard motors

IE3, NEMA Premium Efficient – self-ventilated · Frame sizes 71 M to 160 L

Dimensional drawings

Type of construction IM B35

For flange dimensions, see page 1/59 (**Z** = the number of retaining holes)

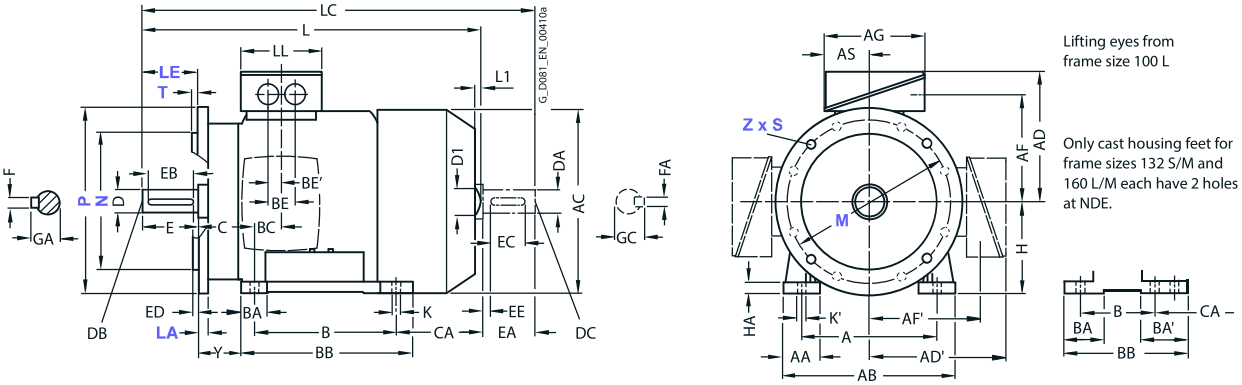

Type of construction IM B14

For flange dimensions, see page 1/59 (**Z** = the number of retaining holes)

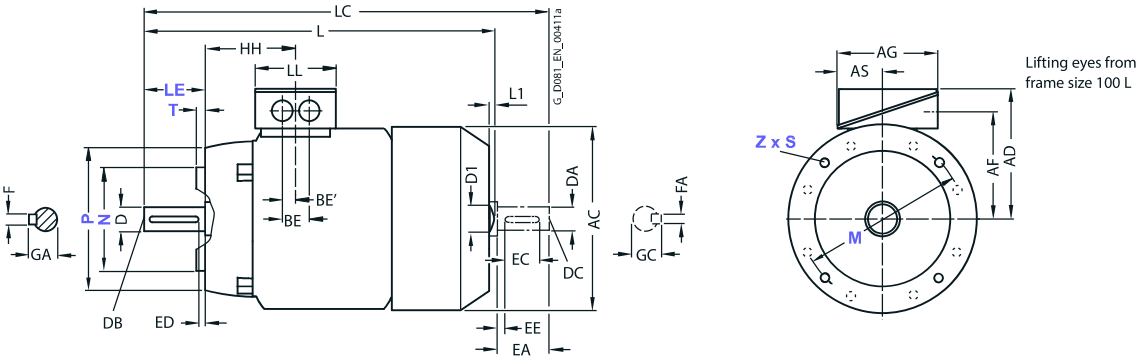

For motor			Dimension designation acc. to **IEC**								DE shaft extension							NDE shaft extension						
Frame size	Motor type 1LE15.3- 1LE16.3-	No. of poles	HH	K	K'	**L**[1]	L1[2]	D1	LC	LL	D	DB	E	EB	ED	F	GA	DA	DC	EA	EC	EE	FA	GC
71 M	1LE15.3-	2, 4, 6																						
	0..0, 0..2		64.5	7.5	7.5	**240**	–	–	278	102	14	M5	30	22	4	5	16	14	M5	30	22	4	5	16
	0..3					**280**			318															
80 M	1LE15.3-	2, 4, 6																						
	0..0, 0..2		71.5	10	10	**292**	–	–	343	102	19	M6	40	32	4	6	21.5	19	M6	40	32	4	6	21.5
	0..3, 0..6					**327**			378															
90 S	1LE15.3-	2, 4, 6																						
	0..0, 0..2, 0..3		79.5	10	10	**347**	–	–	405	102	24	M8	50	40	5	8	27	19	M6	40	27	4	6	21.5
90 L	1LE15.3-0..6	2, 4, 6	79.5	10	10	**387**	–	–	445	102	24	M8	50	40	5	8	27	19	M6	40	27	4	6	21.5
100 L	1AA4, 1AA6, 1AB4, 1AB5, 1AB6,	2, 4	100.5	12	16	**432.5**	7	32	489	134	28	M10	60	50	5	8	31	24	M8	50	40	5	8	27
	1AC4	6				**397**			342.5															
112 M	1BA2, 1BA6, 1BB2, 1BC2, 1BD2 1BB6	2, 4, 6	100.5	12	16	**415.5**	7	32	475	134	28	M10	60	50	5	8	31	24	M8	50	40	5	8	27
						465,5			520															
132 S	1CA0, 1CC0, 1CD0	2, 6, 8	115.5	12	16	**466.5**	8.5	39	535.5	134	38	M12	80	70	5	10	41	28	M10	60	50	5	8	31
	1CA1, 1CA6, 1CA7, 1CB0	2, 4				**516.5**			585.5															
132 M	1CC2	6	115.5	12	16	**466.5**	8.5	39	535.5	134	38	M12	80	70	5	10	41	28	M10	60	50	5	8	31
	1CB2, 1CC3, 1CD2	4, 6, 8				**516.5**			585.5															
	1CB6	4				**567.5**	–		630.5															
160 M	All	2, 4, 6, 8	145	14.5	18	**606**	10	45	730	165	42	M16	110	90	10	12	45	42	M16	110	90	10	12	45
160 L	All	2, 4, 6, 8	145	14.5	18	**666**	10	45	790	165	42	M16	110	90	10	12	45	42	M16	110	90	10	12	45

1) For 1LE16 motors less dimension L1.
2) Only for 1LE15 motors.

© Innomotics 2024

Innomotics GP and Innomotics SD standard motors

IE3, NEMA Premium Efficient – self-ventilated · Frame sizes 180 M to 315 L

Dimensional drawings

Type of construction IM B3

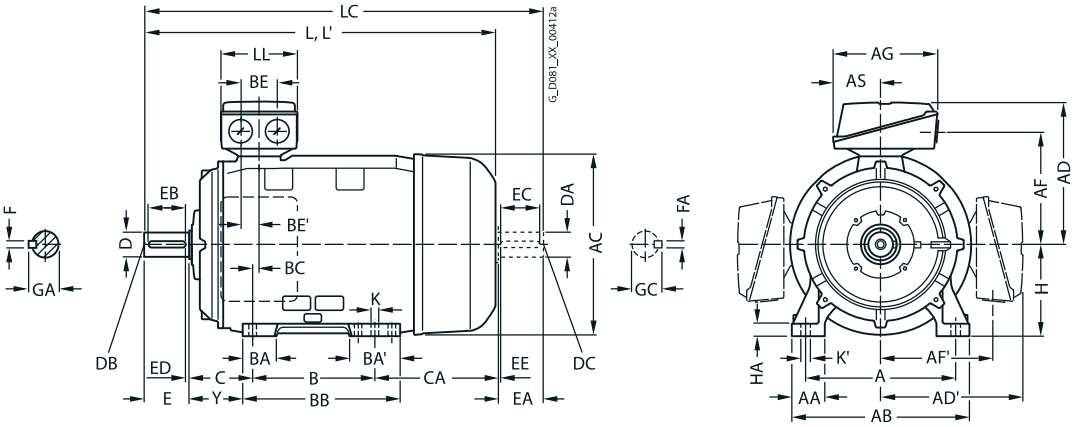

Types of construction IM B5 and IM V1

For flange dimensions, see page 1/59 (**Z** = the number of retaining holes)

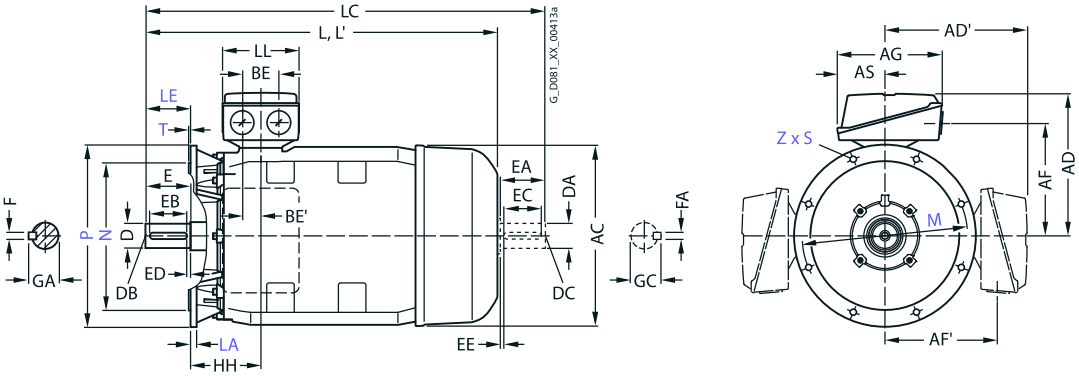

For motor			Dimension designation acc. to **IEC**																		
Frame size	Motor type 1LE1503-, 1LE1523-, 1LE1543- 1LE1603-, 1LE1623-, 1LE1643-	No. of poles	A	AA	**AB**	AC	**AD**	AD'	AF	AF'	AG	AS	B	BA	BA'	BB	BC	BE	BE'	C	CA
180 M/ 180 L	1EB2, 1EC4	4, 6	279	65	**339**	356	**286**	286	234	234	190	92	241	85	120	328	34	60	30	121	202
	1EA2, 1EB4, 1ED4	2, 4, 8																			
200 L	2AA4, 2AC4	2, 6	318	70	**378**	396	**315**	315	259	259	266	112	305	104	104	355	31	85	42.5	133	177
	2AA5, 2AB5,2AC5, 2AD5, 2AD6	2, 4, 6, 8																			202
225 S	2BB0, 2BD0	4, 8	356	80	**436**	449	**338**	338	282	282	266	112	286	92	117	361	15	85	42.5	149	218
225 M	2BA2	2	356	80	**436**	449	**338**	338	282	282	266	112	311	92	117	361	15	85	42.5	149	253
	2BB2, 2BC2, 2BD2	4, 6, 8																			
250 M	2CA2	2	406	100	**490**	497	**410**	410	322	322	319	145	349	102	102	409	24	110	55	168	230
	2CB2, 2CC2, 2CD2, 2CD6	4, 6, 8																			
280 S	2DA0	2	457	100	**540**	551	**433**	433	345	345	319	145	368	101	152	479	20	110	55	190	267
	2DB0, 2DC0, 2DD0	4, 6, 8																			
280 M	2DC2, 2DD2, 2DD6	6, 8	457	100	**540**	551	**433**	433	345	345	319	145	419	101	152	479	20	110	55	190	326
	2DA2	2																			
	2DB2	4																			
315 S	3AA0	2	508	120	**610**	616	**515**	515	404	404	374	164	406	113	170	527	22	110	55	216	295
	3AB0, 3AC0, 3AD0	4, 6, 8																			
315 M[1]	3AA2	2	508	120	**610**	616	**515**	515	404	404	374	164	457	113	170	578	22	110	55	216	409
	3AB2, 3AC2, 3AD2	4, 6, 8																			
315 L[1]	3AA4	2	508	120	**610**	616	**515**	515	404	404	374	164	508	113	170	578	22	110	55	216	358
	3AB4, 3AC4, 3AD4	4, 6, 8																			
	3AA5	2												176	227	648					513
	3AB5, 3AC5, 3AC6, 3AD5, 3AD6	4, 6, 8																			

[1] With terminal box position right, terminal box left, and with order code **H01** only screwed-on feet with 3 drilled holes with dimension "B" (406, 457, and 508 mm). The dimension "BB" will then be 666 mm.

© Innomotics 2024

Innomotics GP and Innomotics SD standard motors

IE3, NEMA Premium Efficient – self-ventilated · Frame sizes 180 M to 315 L

Dimensional drawings

Type of construction IM B35

For flange dimensions, see page 1/59 (**Z** = the number of retaining holes)

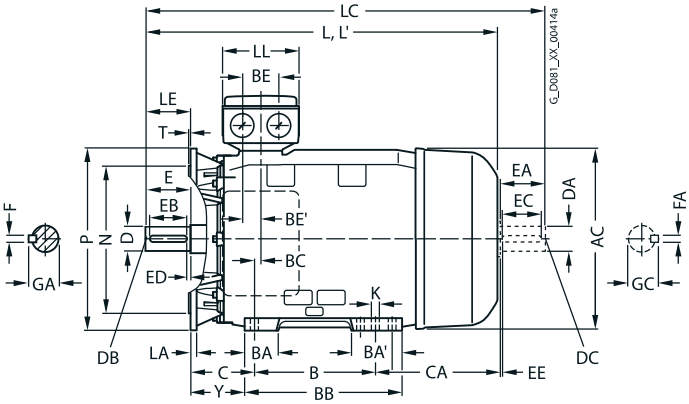

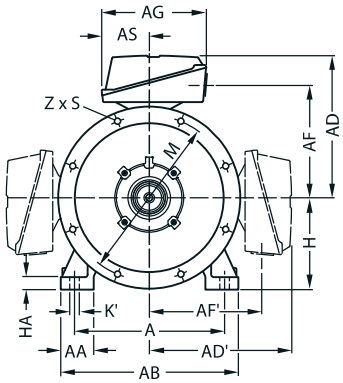

For motor	Dimension designation acc. to **IEC**									DE shaft extension							NDE shaft extension						
Motor type 1LE1503-, 1LE1523-, 1LE1543- 1LE1603-, 1LE1623-, 1LE1643-	**H**	HA	Y	HH	K	K'	**L**	LC[1]	LL	D	DB	E	EB	ED	F	GA	DA	DC	EA	EC	EE	FA	GC
1EB2, 1EC4	**180**	20	95	155	15	19	**668**	784	164	48	M16	110	100	5	14	51.5	48	M16	110	100	5	14	51.5
1EA2, 1EB4, 1ED4							**698**	814															
2AA4, 2AC4	**200**	25	108	164	19	25	**721**	835	197	55	M20	110	100	5	16	59	55	M20	110	100	5	16	59
2AA5, 2AB5,2AC5, 2AD5, 2AD6							**746**	860															
2BB0, 2BD0	**225**	34	124	164	19	25	**788**	903	197	60	M20	140	125	10	18	64	55	M20	110	100	5	16	59
2BA2							**818**	933	197	55		110	100	5	16	59	48	M16				14	51.5
2BB2, 2BC2, 2BD2							**848**	963		60		140	125	10	18	64	55	M20				16	59
2CA2	**250**	40	138	192	24	30	**887**	1002	233	60	M20	140	125	10	18	64	55	M20	110	100	5	16	59
2CB2, 2CC2, 2CD2, 2CD6								1032		65						69	60		140	125	10	18	64
2DA0	**280**	40	160	210	24	30	**960**	1105	233	65	M20	140	125	10	18	69	60	M20	140	125	10	18	64
2DB0, 2DC0, 2DD0										75					20	79.5	65						69
2DC2, 2DD2, 2DD6							**960**	1105	233	75		140	125	10	20	79.5	65				10	18	69
2DA2							**1070**	1215		65					18	69	60						64
2DB2										75					20	79.5	65						69
3AA0	**315**	50	181	238	28	35	**1052**	1197	299	65	M20	140	125	10	18	69	60	M20	140	125	10	18	64
3AB0, 3AC0, 3AD0							**1082**	1227		80		170	140	25	22	85	70					20	74.5
3AA2							**1217**	1362	299	65		140	125	10	18	69	60				10	18	64
3AB2, 3AC2, 3AD2							**1247**	1392		80		170	140	25	22	85	70					20	74.5
3AA4							**1217**	1362	299	65		140	125	10	18	69	60				10	18	64
3AB4, 3AC4, 3AD4							**1247**	1392		80		170	140	25	22	85	70					20	74.5
3AA5			146				**1372**	1517		65		140	125	10	18	69	60					18	64
3AB5, 3AC5, 3AC6, 3AD5, 3AD6							**1402**	1547		80		170	140	25	22	85	70					20	74.5

[1] In the low-noise version, a second shaft extension and/or mounted encoder is not possible.

© Innomotics 2024

Innomotics GP and Innomotics SD standard motors

IE3 – 1LE1583 self-ventilated · Frame sizes 100 L to 200 L

Dimensional drawings

Type of construction IM B3

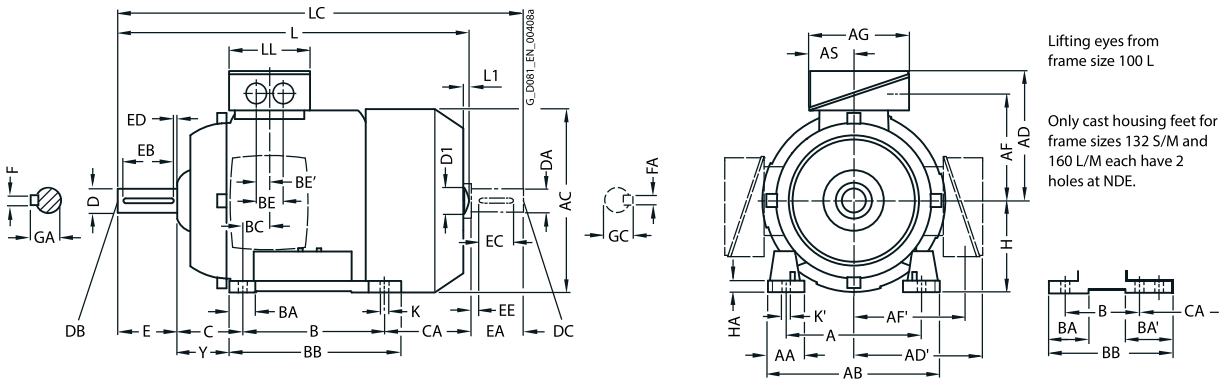

3

Types of construction IM B5 and IM V1

For flange dimensions, see page 1/59 (**Z** = the number of retaining holes)

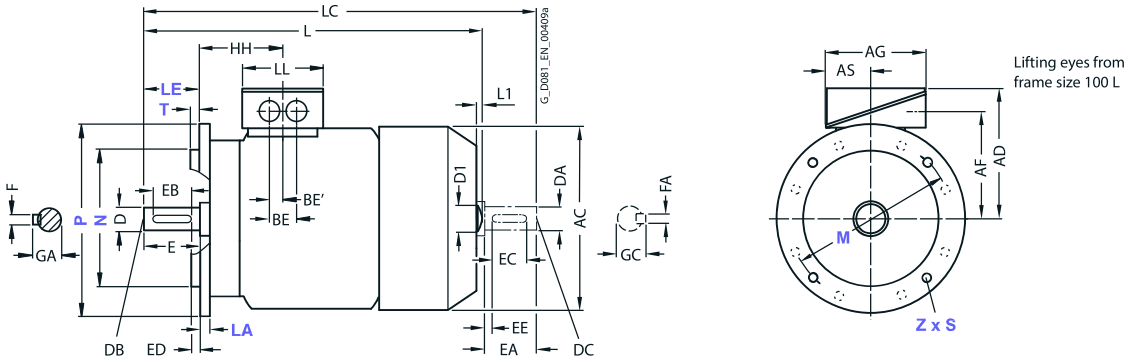

For motor			Dimension designation acc. to **IEC**																					
Frame size	Motor type 1LE1583-	No. of poles	A	AA	**AB**	AC	**AD**	AD'	AF	AF'	AG	AS	B	BA	BA'	BB	BC	BE	BE'	C	CA	**H**	HA	Y
100 L	1AA4, 1AB4, 1AB5	2, 4	160	42	**196**	217	**193**	193	147	147	163	80.5	140	48	48	176	37.5	48	24	63	141 181	**100**	12	45
112 M	1BA2, 1BB2	2 4	190	46	**226**	239	**195**	195	150	150	163	80.5	140	48	48	176	30	48	24	70	130 175	**112**	12	52
132 S	1CA0, 1CA1 1CB0	2, 4	216	53	**256**	281	**214.5**	214.5	169	169	163	80.5	140	52[5]	89[1]	218[2]	26.5	48	24	89	178.5	**132**	15	69
132 M	1CB2		216	53	**256**	281	**214.5**	214.5	169	169	163	80.5	178	52[5]	89[1]	218	26.5	48	24	89	128.5	**132**	15	69
160 M	1DA2, 1DA3 1DB2	2, 4	254	60	**300**	333.5	**261**	261	213	213	190	92	210	73[6]	117[3]	300[4]	37	60	30	108	192	**160**	18	85
160 L	1DA4, 1DB4	2, 4	254	60	**300**	333.5	**261**	261	213	213	190	92	254	73[6]	117[3]	300	37	60	30	108	208	**160**	18	85
180 M/ 180 L	1EB2, 1EC4 1EA2, 1EB4	4, 6 2, 4	279	65	**339**	356	**286**	286	234	234	190	92	241	85	120	328	34	60	30	121	164 194	**180**	20	95
200 L	2AA4, 2AC4, 2AA5, 2AB5, 2AC5	2, 6 2, 4, 6	318	70	**378**	396	**315**	315	259	259	266	112	305	104	104	355	31	85	42.5	133	177 202	**200**	25	108

1) With screwed-on feet, dimension BA' is 41 mm.
2) With screwed-on feet, dimension BB is 180 mm.
3) With screwed-on feet, dimension BA' is 51 mm.
4) With screwed-on feet, dimension BB is 256 mm.
5) With screwed-on feet, dimension BA is 41 mm.
6) With screwed-on feet, dimension BA is 51 mm.

© Innomotics 2024

Dimensional drawings

Type of construction IM B35

For flange dimensions, see page 1/59 (**Z** = the number of retaining holes)

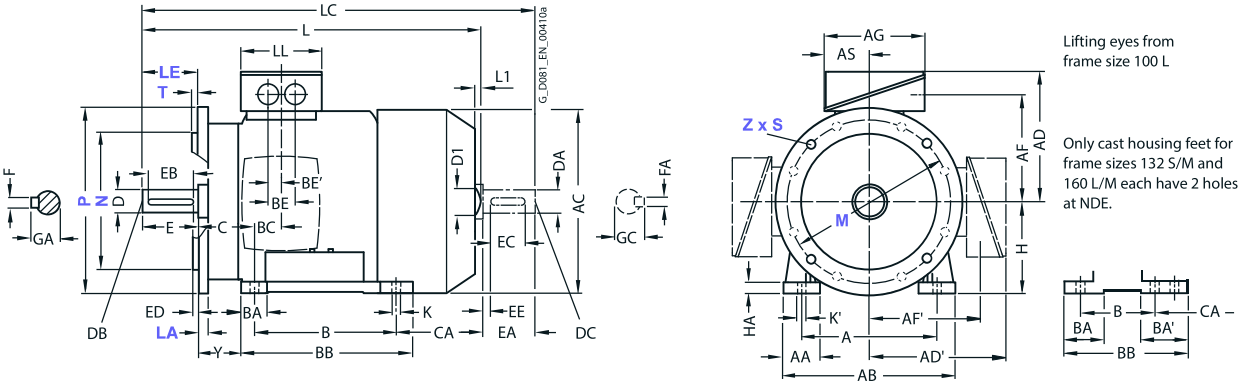

Type of construction IM B14

For flange dimensions, see page 1/59 (**Z** = the number of retaining holes)

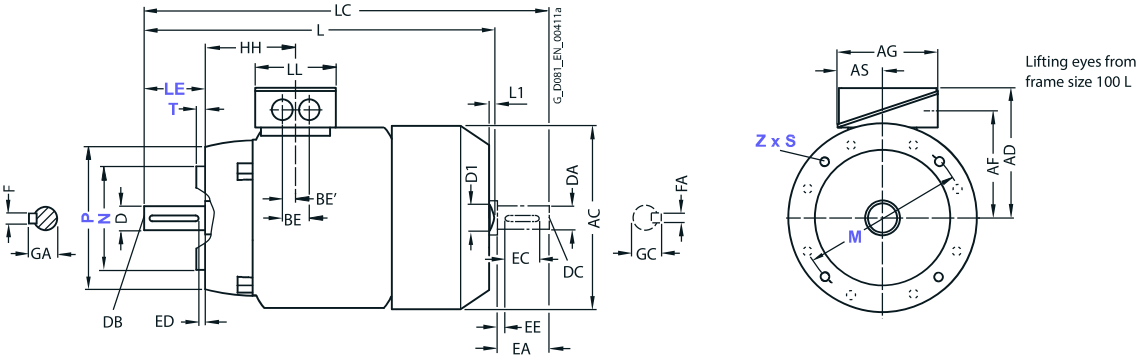

For motor			Dimension designation acc. to **IEC**								DE shaft extension							NDE shaft extension						
Frame size	Motor type 1LE1583	No. of poles	HH	K	K'	**L**	L1 [1]	D1	LC	LL	D	DB	E	EB	ED	F	GA	DA	DC	EA	EC	EE	FA	GC
100 L	1AA4,1AB4, 1AB5	2 4	100.5	12	16	**432.5** **472.5**	7	32	489 529	134	28	M10	60	50	5	8	31	24	M8	50	40	5	8	27
112 M	1BA2, 1BB2	2 4	100.5	12	16	**415.5** **450.5**	7	32	475 520	134	28	M10	60	50	5	8	31	24	M8	50	40	5	8	27
132 S	1CA0, 1CA1, 1CB0	2, 4	115.5	12	16	**516.5**	8.5	39	585.5	134	38	M12	80	70	5	10	41	28	M10	60	50	5	8	31
132 M	1CB2	4	115.5	12	16	**516.5**	8.5	39	585.5	134	38	M12	80	70	5	10	41	28	M10	60	50	5	8	31
160 M	1DA2, 1DA3, 1DB2	2, 4	145	14.5	18	**606**	10	45	730	165	42	M16	110	90	10	12	45	42	M16	110	90	10	12	45
160 L	1DA4, 1DB4	2, 4	145	14.5	18	**666**	10	45	790	165	42	M16	110	90	10	12	45	42	M16	110	90	10	12	45
180 M/ 180 L	1EB2, 1EC4 1EA2, 1EB4	4, 6 2, 4	155	15	19	**668** **698**	–	–	784 814	164	48	M16	110	100	5	14	51.5	48	M16	110	100	5	14	51.5
200 L	2A4, 2AC4, 2AA5, 2AB5, 2AC5	2, 6 2, 4, 6	164	19	25	**721** **746**	–	–	835 860	197	55	M20	110	100	5	16	59	55	M20	110	100	5	16	59

[1] In the low-noise version, a second shaft extension and/or mounted encoder is not possible.

© Innomotics 2024

Innomotics GP and Innomotics SD standard motors

IE3 – 1LE1583 self-ventilated · Frame sizes 225 S to 315 L

Dimensional drawings

Type of construction IM B3

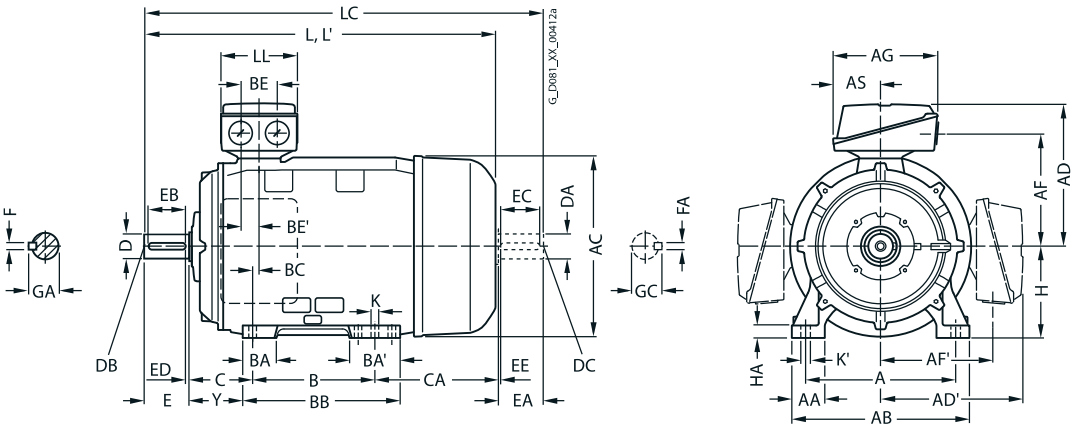

3

Types of construction IM B5 and IM V1

For flange dimensions, see page 1/59 (**Z** = the number of retaining holes)

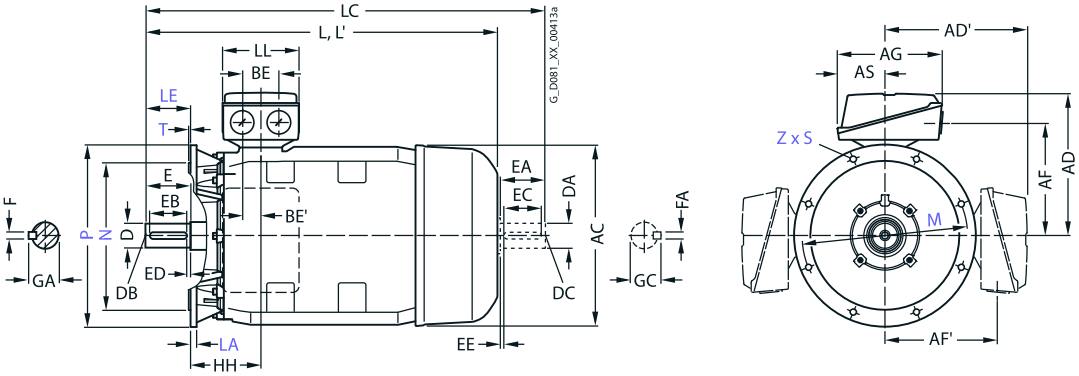

For motor			Dimension designation acc. to **IEC**																		
Frame size	Motor type 1LE1583-	No. of poles	A	AA	**AB**	AC	**AD**	AD'	AF	AF'	AG	AS	B	BA	BA'	BB	BC	BE	BE'	C	CA
225 S	2BB0	4	356	80	**436**	449	**338**	338	282	282	266	112	286	92	117	361	15	85	42.5	149	278
	2BD0	8													118						218
225 M	2BB2, 2BC2	4, 6	356	80	**436**	449	**338**	338	282	282	266	112	311	92	117	361	15	85	42.5	149	333
	2BA2	2																			253
	2BD2	8													118						193
250 M	2CA2, 2CD2	2 8	406	100	**490**	497	**410**	410	322	322	319	145	349	102	102	409	24	110	55	168	235
	2CB2, 2CC2	4 6																			305
280 S	2DA0, 2DB0	2 4	457	100	**540**	551	**433**	433	345	345	319	145	368	101	152	479	20	110	55	190	377
	2DC0, 2DD0	6, 8																			267
280 M	2DA2, 2DB2, 2DC2	2, 4 6	457	100	**540**	551	**433**	433	345	345	319	145	419	101	152	479	20	110	55	190	326
	2DD2	8																			216
315 S	3AA0, 3AD0	2 8	508	120	**610**	616	**515**	515	404	404	374	164	406	113	170	527	22	110	55	216	295
315 M	3AA2[1], 3AB0, 3AB2[1], 3AC0, 3AC2	2 4, 6	508	120	**610**	616	**515**	515	404	404	374	164	457	113	170	578	22	110	55	216	409
	3AD2[1]	8														527					244
315 L[1]	3AA4, 3AB4, 3AD4, 3AD5, 3AD6	2 4, 6, 8	508	120	**610**	616	**515**	515	404	404	374	164	508	113	170	578	22	110	55	216	358
	3AA5, 3AC4, 3AC5, 3AC6 3AB5	2 6 4												176	227	648					513

[1] With terminal box position right, terminal box left, and with order code **H01** only screwed-on feet with 3 drilled holes with dimension "B" (406, 457, and 508 mm). The dimension "BB" will then be 666 mm.

© Innomotics 2024

Dimensional drawings

Type of construction IM B35

For flange dimensions, see page 1/59 (**Z** = the number of retaining holes)

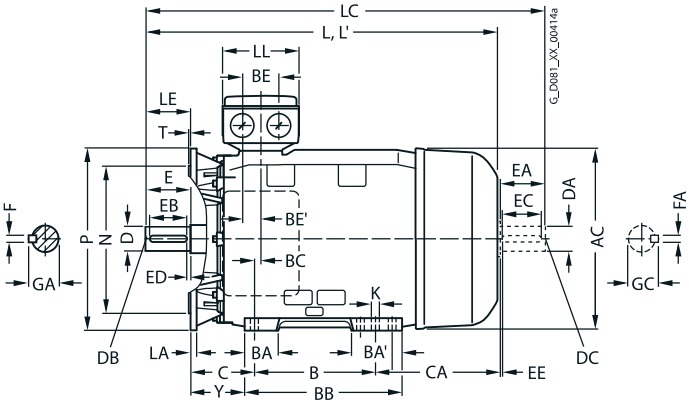

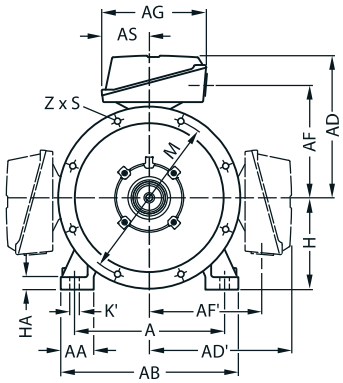

For motor Motor type 1LE1583-	Dimension designation acc. to **IEC** **H**	HA	Y	HH	K	K'	**L**	LC [1]	LL	DE shaft extension D	DB	E	EB	ED	F	GA	NDE shaft extension DA	DC	EA	EC	EE	FA	GC
2BB0	**225**	34	124	164	19	25	**848**	903	197	60	M20	140	125	10	18	64	55	M20	110	100	5	16	59
2BD0							**788**																
2BB2, 2BC2	**225**	34	124	164	19	25	**928**	963	197	60	M20	140	125	10	18	64	55	M20	110	100	5	16	59
2BA2							**818**	933		55		110	100	5	16	59	48	M16				14	51.5
2BD2							**788**	903		60		140	125	10	18	64	55	M20				16	59
2CA2,	**250**	40	138	192	24	30	**887**	1002	233	60	M20	140	125	10	18	64	55	M20	110	100	5	16	59
2CD2								1032		65						69	60		140	125	10	18	64
2CB2,							**957**	1032															
2CC2								1072								64							
2DA0,	**280**	40	160	210	24	30	**1070**	1215	233	65	M20	140	125	10	18	69	60	M20	140	125	10	18	64
2DB0										75					20	79.5	65						69
2DC0, 2DD0							**960**	1105															
2DA2,	**280**	40	160	210	24	30	**1070**	1215	233	65	M20	140	125	10	18	69	60	M20	140	125	10	18	64
2DB2, 2DC2										75					20	79.5	65						69
2DD2							**960**	1105															
3AA0,	**315**	50	181	238	28	35	**1052**	1197	299	65	M20	140	125	10	18	69	60	M20	140	125	10	18	64
3AD0							**1082**	1227		80		170	140	25	22	85	70					20	74.5
3AA2,	**315**	50	181	238	28	35	**1217**	1362	299	65	M20	140	125	10	18	69	60	M20	140	125	10	18	64
3AB0, 3AB2, 3AC0, 3AC2							**1247**	1392		80		170	140	25	22	85	70					20	74.5
3AD2							**1082**	1227															
3AA4,	**315**	50	181	238	28	35	**1217**	1362	299	65	M20	140	125	10	18	69	60	M20	140	125	10	18	64
3AB4, 3AD4, 3AD5, 3AD6							**1247**	1392		80		170	140	25	22	85	70					20	74.5
3AA5,			146				**1372**	1517		65		140	125	10	18	69	60					18	64
3AC4, 3AC5, 3AC6							**1402**	1547		80		170	140	25	22	85	70					20	74.5
3AB5					22																		

[1] In the low-noise version, a second shaft extension and/or mounted encoder is not possible.

© Innomotics 2024

Innomotics GP and Innomotics SD standard motors

IR3 Rendimento Premium – self-ventilated · Frame sizes 180 M to 280 M

Dimensional drawings

Type of construction IM B3

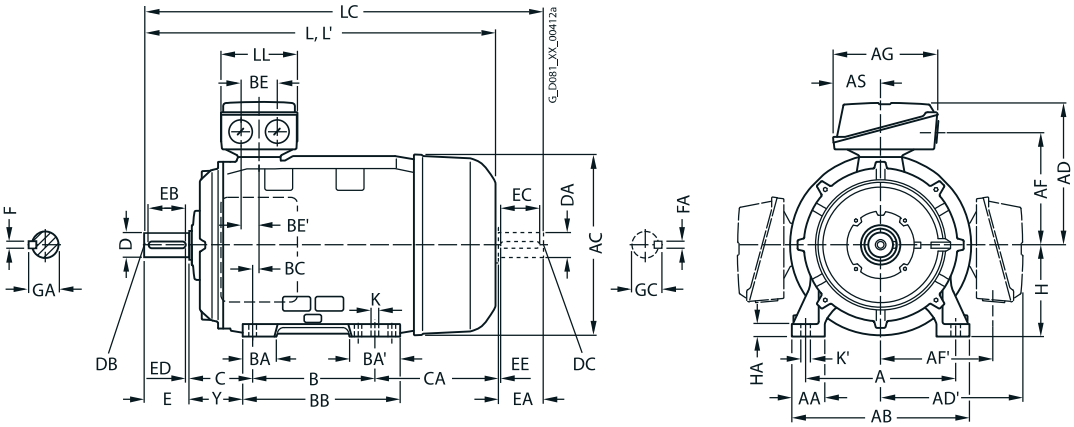

Types of construction IM B5 and IM V1

For flange dimensions, see page 1/59 (**Z** = the number of retaining holes)

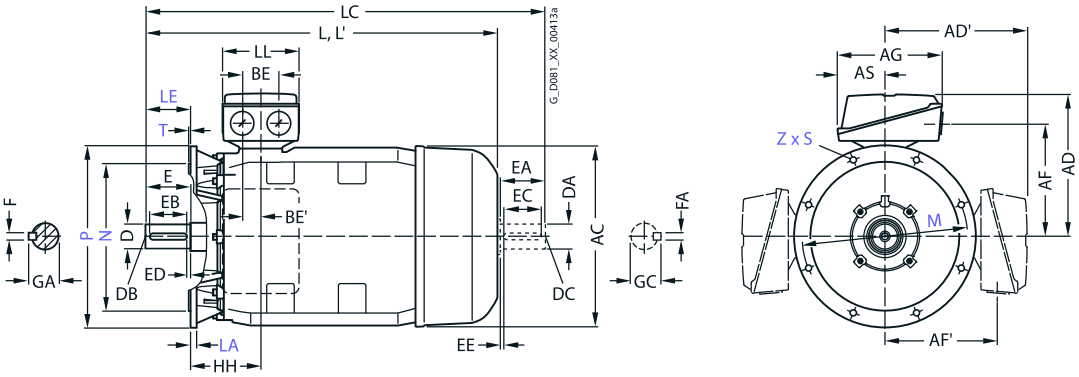

For motor			Dimension designation acc. to **IEC**																		
Frame size	Motor type 1LE1573-	No. of poles	A	AA	**AB**	AC	**AD**	AD´	AF	AF´	AG	AS	B	BA	BA´	BB	BC	BE	BE´	C	CA
180 M	1EB4	4	279	65	**339**	356	**286**	286	234	234	190	92	241	85	120	328	34	60	30	121	202
	1ED3	8																			
180 L	1EC6, 1ED4, 1ED6	6, 8	279	65	**339**	356	**286**	286	234	234	190	92	279	85	120	328	34	60	30	121	202
200 L	2AA5, 2AB5, 2AB6, 2AC5, 2AC6, 2AD6	2, 4, 6, 8	318	70	**378**	396	**315**	315	259	259	266	112	305	104	104	355	31	85	42.5	133	177
	2AA4	2																			
225 S	2BA2	2	356	80	**436**	449	**338**	338	282	282	266	112	286	92	115	361	15	85	42.5	149	278
	2BB2	4																			
225 M	2BD2	8	356	80	**436**	449	**338**	338	282	282	266	112	286	92	118	361	15	85	42.5	149	218
	2BA6	2											311		117						253
	2BB6, 2BC6	4, 6																			
	2BD6	8													115						
250 M	2CA6	2	406	100	**490**	497	**410**	410	322	322	319	145	349	102	102	409	24	110	55	168	305
	2CB6, 2CC6	4, 6																			
	2CD6, 2CD7	8																			235
280 S	2DA2	2	457	100	**540**	551	**433**	433	345	345	319	145	368	101	152	479	20	110	55	190	377
	2DB2	4																			
	2DC2	6																			267
	2DC6	6																			377
	2DD6	8																			267
280 M	2DA6	2	457	100	**540**	551	**433**	433	345	345	319	145	419	101	152	479	20	110	55	190	326
	2DB6	4																			
	2DC7, 2DD7	6, 8											368								377

© Innomotics 2024

Innomotics GP and Innomotics SD standard motors

Dimensional drawings

Type of construction IM B35

For flange dimensions, see page 1/59 (**Z** = the number of retaining holes)

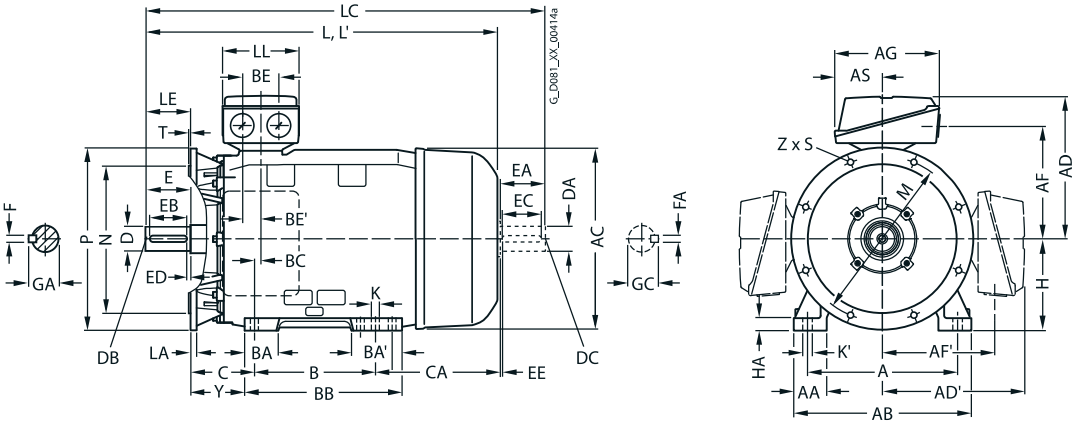

For motor			Dimension designation acc. to **IEC**									DE shaft extension							NDE shaft extension						
Frame size	Motor type 1LE1573-	No. of poles	**H**	HA	Y	HH	K	K´	**L**	LC[1]	LL	D	DB	E	EB	ED	F	GA	DA	DC	EA	EC	EE	FA	GC
180 M	1EB4	4	**180**	20	95	155	15	19	**698**	814	164	48	M16	110	100	5	14	51.5	48	M16	110	100	5	14	51.5
	1ED3	8							**668**	784															
180 L	1EC6, 1ED4, 1ED6	6, 8	**180**	20	95	155	15	19	**698**	814	164	48	M16	110	100	5	14	51.5	48	M16	110	100	5	14	51.5
200 L	2AA5, 2AB5, 2AB6, 2AC5, 2AC6, 2AD6	2, 4, 6, 8	**200**	25	108	164	19	25	**746**	860	197	55	M20	110	100	5	16	59	55	M20	110	100	5	16	59
	2AA4	2							**721**	835															
225 S	2BA2	2	**225**	34	124	164	19	25	**818**	933	197	55	M20	110	100	5	16	59	48	M16	110	100	5	14	51.5
	2BB2	4							**848**	963		60		140	125	10	18	64	55	M20				16	59
225 M	2BD2	8	**225**	34	124	164	19	25	**788**	903	197	60	M20	140	125	10	18	64	55	M20	110	100	5	16	59
	2BA6	2							**898**	933		55		110	100	5	16	59	48					14	51.5
	2BB6, 2BC6	4, 6							**928**	963		60		140	125	10	18	64	55					16	59
	2BD6	8							**848**																
250 M	2CA6	2	**250**	40	138	192	24	30	**957**	1002	233	60	M20	140	125	10	18	64	55	M20	110	100	5	16	59
	2CB6, 2CC6	4, 6								1072		65						69	60		140	125	10	18	64
	2CD6, 2CD7	8							**887**	1032															
280 S	2DA2	2	**280**	40	160	210	24	30	**1070**	1215	233	65	M20	140	125	10	18	69	60	M20	140	125	10	18	64
	2DB2	4															20	79.5	65						69
	2DC2	6							**960**	1105															
	2DC6	6							**1070**																
	2DD6	8							**960**						124										
280 M	2DA6	2	**280**	40	160	210	24	30	**1070**	1215	233	65	M20	140	125	10	18	69	60	M20	140	125	10	18	64
	2DB6	4															20	79.5	65						69
	2DC7, 2DD7	6, 8								1105															

[1] In the low-noise version, a second shaft extension and/or mounted encoder is not possible.

© Innomotics 2024

Innomotics GP and Innomotics SD standard motors

IR3 Rendimento Premium – self-ventilated · Frame sizes 315 S to 315 L

Dimensional drawings

Type of construction IM B3

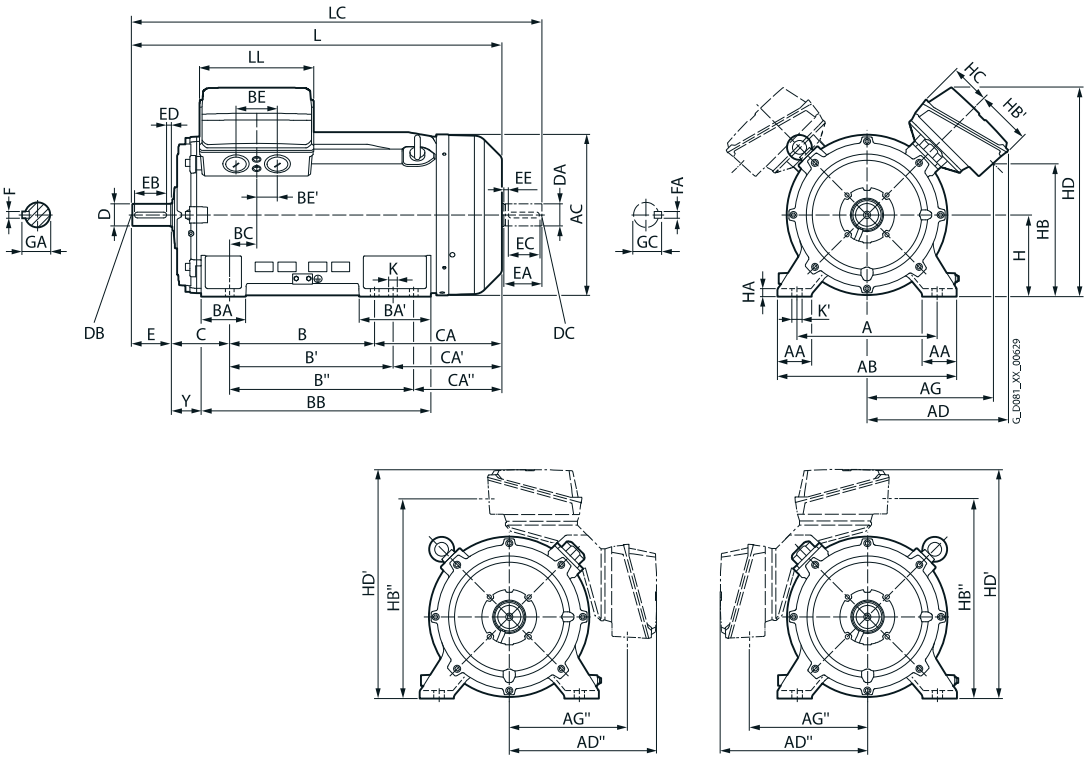

3

Types of construction IM B5 and IM V1

For flange dimensions, see page 1/59 (**Z** = the number of retaining holes)

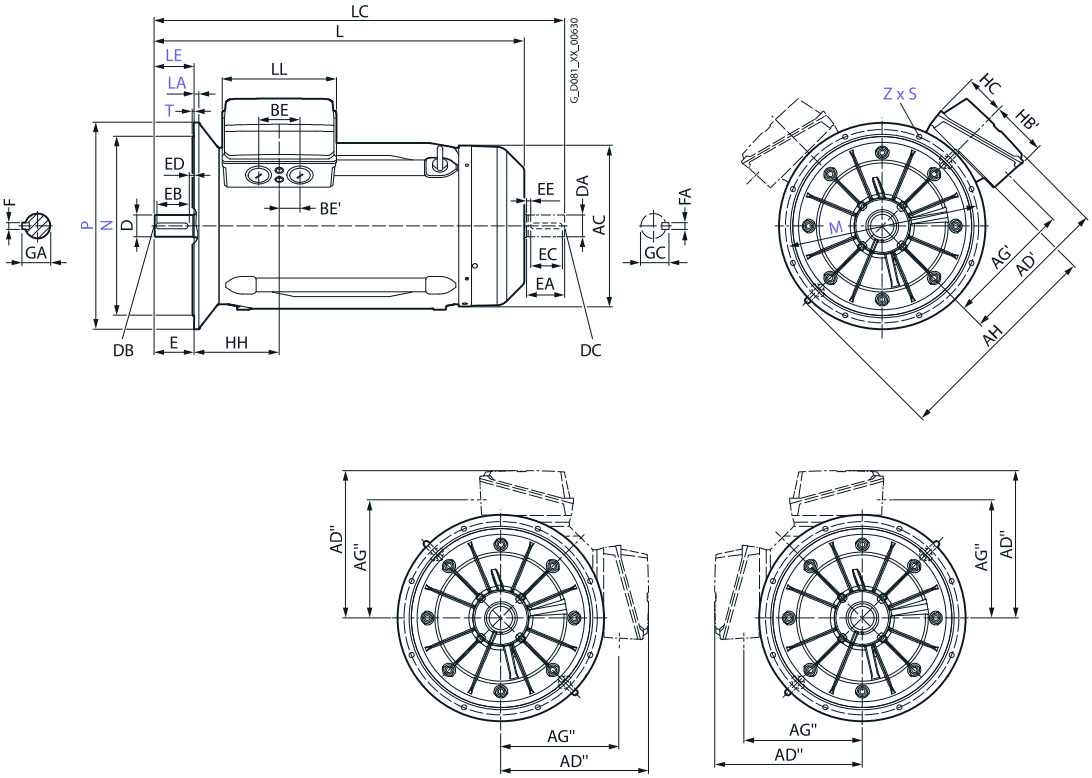

© Innomotics 2024

Innomotics GP and Innomotics SD standard motors

Dimensional drawings

Type of construction IM B35

For flange dimensions, see page 1/59 (**Z** = the number of retaining holes)

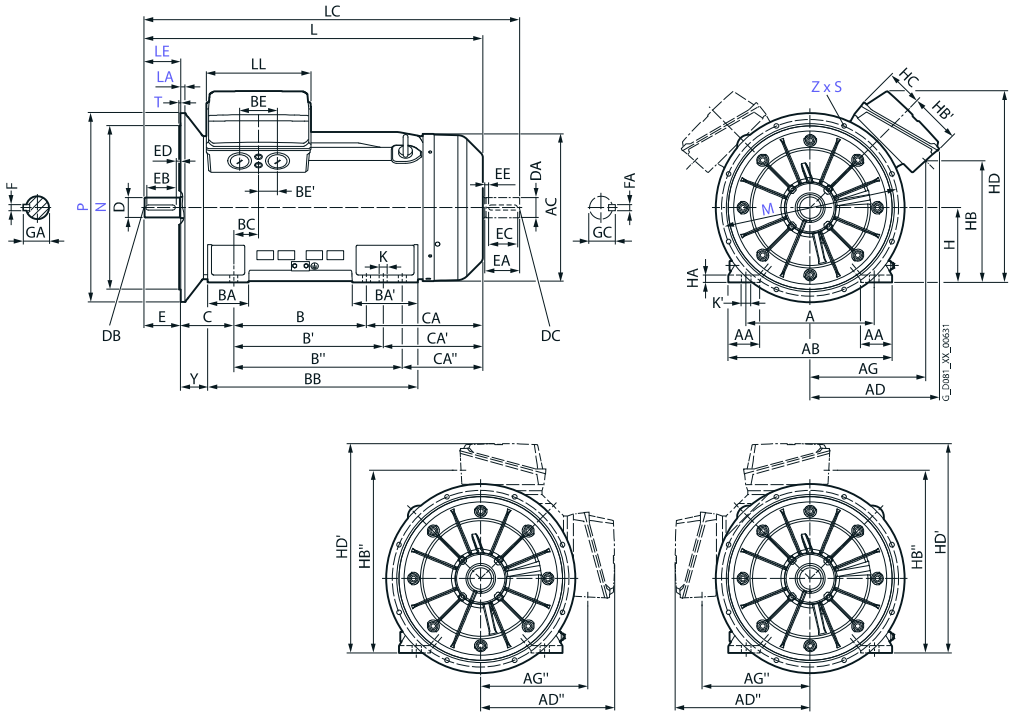

For motor			Dimension designation acc. to **IEC**																									
Frame size	Motor type 1LE5773-	No. of poles	A	AA	**AB**	AC	**AD**	AD´	AD´´	AG	AG´	AG´´	AH	B	B´	B´´	BA	BA´	BB	BC	BE	BE´	C	CA	CA´	CA´´	**H**	HA	HB
315 S	3AA2	2	508	120	**610**	624	**544**	565	540	554	459	444	680	457	508	–	176	227	648	139	120	60	216	469	418	–	**315**	50	413
	3AB2	4								491	480	434									135	67.5							491
315 M	3AA4	2	508	120	**610**	624	**544**	565	540	554	459	444	680	457	508	–	176	227	648	139	120	60	216	469	418	–	**315**	50	413
	3AA5	2																											
	3AB4, 3AB5, 3AC4, 3AC5, 3AC6, 3AD4, 3AD5	4, 6, 8								491	480	434									135	67.5							491
315 L	3AB6	4	508	120	**610**	624	**544**	565	540	553	459	434	805	508	560	630	176	299	770	139	120	60	216	528	476	406	**315**	50	413
	3AB7	4								554		446												618	566	496			497
	3AC7, 3AD7	6, 8								491	470	421									135	67.5		528	476	406			491
	3AD8	8								554	459	446												618	566	496			497
	3AA6	2										434	805	457	508	–	176	227	648	139	120	60		469	418	-			413
	3AD6	8								491	480		680			–					135	67.5							491

For motor			Dimension designation acc. to **IEC**											DE shaft extension							NDE shaft extension							
Frame size	Motor type 1LE5773-	No. of poles	HB´	HB´´	HC	HD	HD´	HH	Y	K	K´	**L**	LC[1]	LL	D	DB	E	EB	ED	F	GA	DA	DC	EA	EC	EE	FA	GC
315 S	3AA2	2	336	759	167	800	855	355	146	28	35	**1132**	1427	327	65	M20	140	125	10	18	69	60	M20	140	125	10	18	64
	3AB2	4	226	761								**1312**	1457		85		170	140	25	22	90	70					20	74.5
315 M	3AA4	2	336	759	167	800	855	355	146	28	35	**1132**	1427	327	65	M20	140	125	10	18	69	60	M20	140	125	10	18	64
	3AA5	2		749								**1282**																
	3AB4, 3AB5, 3AC4, 3AC5, 3AC6, 3AD4, 3AD5	4, 6, 8	226	761	167	800	855	355	146	28	35	**1312**	1457	327	85	M20	170	140	25	22	90	70	M20	140	125	10	20	74.5
315 L	3AB6	4	336	749	167	800	855	355	146	28	35	**1422**	1567	327	85	M20	170	140	25	22	90	70	M20	140	125	10	20	74.5
	3AB7	4	336	749		885						**1512**	1657															
	3AC7, 3AD7	6, 8	226	763		800						**1422**	1567															
	3AD8	8	336	749								**1512**	1657															
	3AA6	2										**1282**	1427		65		140	125	10	18	69	60					18	64
	3AD6	8	226	761								**1312**	1457		85		170	140	25	22	90	70					20	74.5

[1] In the low-noise version, a second shaft extension and/or mounted encoder is not possible.

© Innomotics 2024

Innomotics GP and Innomotics SD standard motors

IE1, IE2, NEMA Energy Efficient – self-ventilated · Frame sizes 71 M to 160 L

Dimensional drawings

Type of construction IM B3

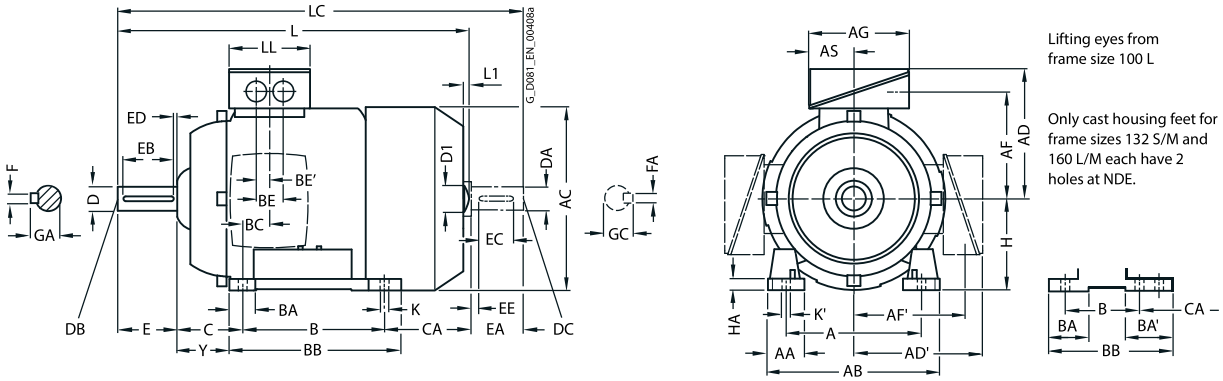

3

Types of construction IM B5 and IM V1

For flange dimensions, see page 1/59 (**Z** = the number of retaining holes)

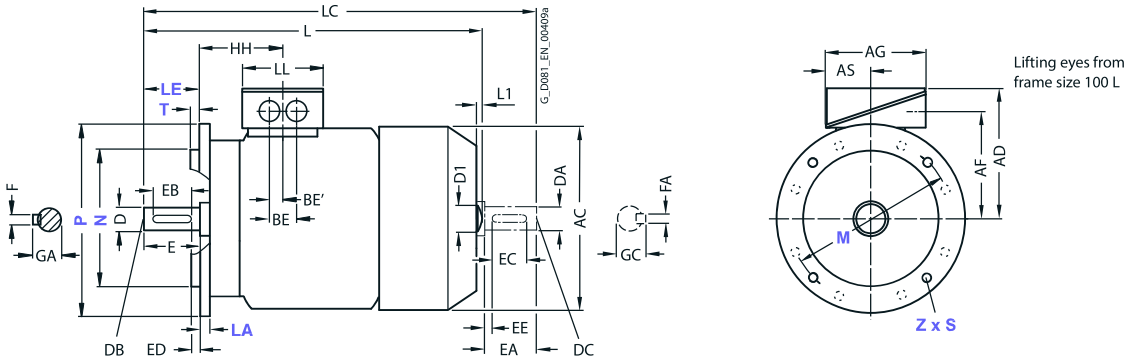

For motor			Dimension designation acc. to **IEC**																					
Frame size	Motor type 1LE15.1, 1LE16.1 1LE1502	No. of poles	A	AA	**AB**	AC	**AD**	AD'	AF	AF'	AG	AS	B	BA	BA'	BB	BC	BE	BE'	C	CA	**H**	HA	Y
71 M	1LE15.1	2, 4, 6	112	30.5	**132**	145	**149**	149	112	112	126	62	90	32	32	106	21	36	18	45	83	**71**	7	37
80 M	1LE15.1	2, 4, 6	125	30.5	**150**	162	**159**	159	122	122	126	62	100	32	32	118	22.5	36	18	50	112.5	**80**	8	41
90 S	1LE15.1	2, 4, 6	140	30.5	**165**	180	**164**	164	127	127	126	62	100	33	54	143	24.5	36	18	56	159	**90**	11	47
90 L	1LE15.1	2, 4, 6	140	30.5	**165**	180	**164**	164	127	127	126	62	125	33	54	143	24.5	36	18	56	134	**90**	11	47
100 L	All	2, 4, 6, 8	160	42	**196**	217	**193**	193	147	147	163	80.5	140	48	48	176	37.5	48	24	63	141	**100**	12	45
112 M	All	2, 4, 6 8	190	46	**226**	239	**195**	195	150	150	163	80.5	140	48	48	176	30	48	24	70	130 155	**112**	12	52
132 S	All	2, 4, 6, 8	216	53	**256**	281	**214.5**	214.5	169	169	163	80.5	140	52[5]	89[1]	218[3]	26.5	48	24	89	166.5	**132**	15	69
132 M	All	2, 4, 6, 8	216	53	**256**	281	**214.5**	214.5	169	169	163	80.5	178	52[5]	89[1]	218	26.5	48	24	89	128.5	**132**	15	69
160 M	All	2, 4, 6, 8	254	60	**300**	333.5	**265**	265	213	213	190	92	210	73[6]	117[2]	300[4]	37	60	30	108	192	**160**	18	85
160 L	All	2, 4, 6, 8	254	60	**300**	333.5	**265**	265	213	213	190	92	254	73[6]	117[2]	300	37	60	30	108	148	**160**	18	85

1) With screwed-on feet, dimension BA' is 41 mm.
2) With screwed-on feet, dimension BA' is 51 mm.
3) With screwed-on feet, dimension BB is 180 mm.
4) With screwed-on feet, dimension BB is 256 mm.
5) With screwed-on feet, dimension BA is 41 mm.
6) With screwed-on feet, dimension BA is 51 mm.

© Innomotics 2024

Innomotics GP and Innomotics SD standard motors

IE1, IE2, NEMA Energy Efficient – self-ventilated · Frame sizes 71 M to 160 L

Dimensional drawings

Type of construction IM B35

For flange dimensions, see page 1/59 (**Z** = the number of retaining holes)

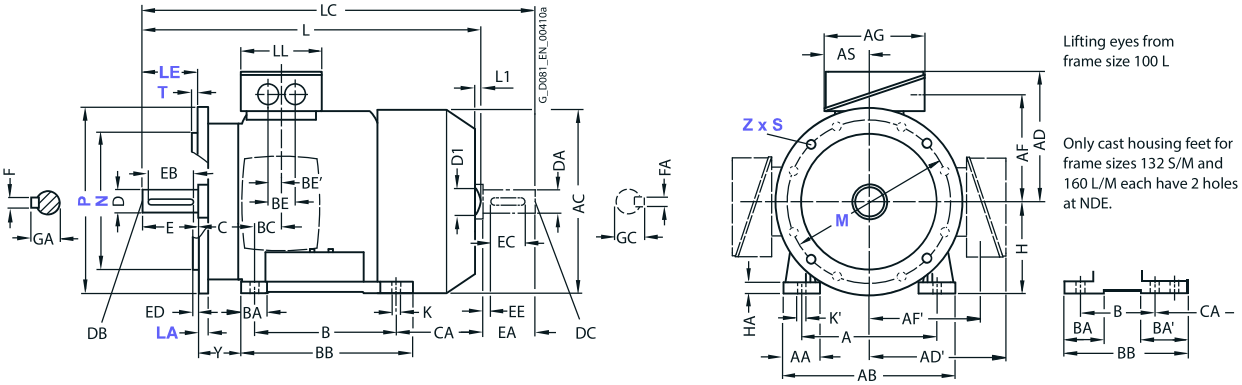

Type of construction IM B14

For flange dimensions, see page 1/59 (**Z** = the number of retaining holes)

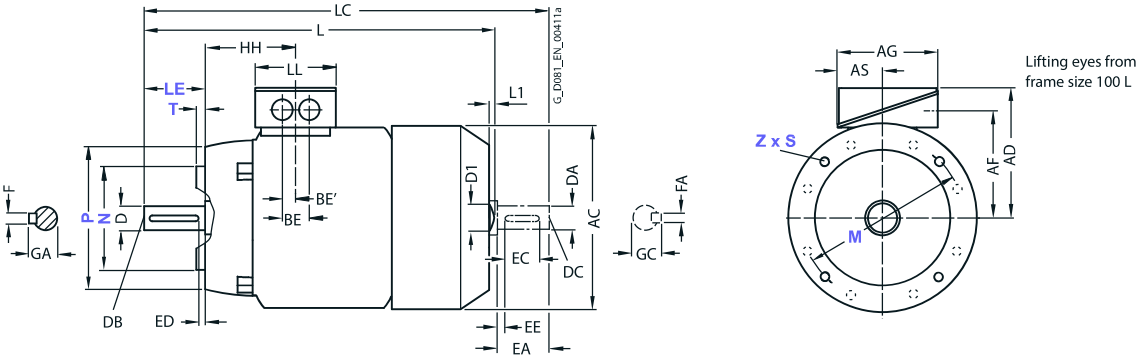

For motor			Dimension designation acc. to **IEC**								DE shaft extension							NDE shaft extension						
Frame size	Motor type 1LE15.1, 1LE16.1 1LE1502	No. of poles	HH	K	K'	**L**[1]	L1[2]	D1	LC	LL	D	DB	E	EB	ED	F	GA	DA	DC	EA	EC	EE	FA	GC
71 M	1LE15.1	2, 4, 6	64.5	7.5	7.5	**240**	–	–	278	102	14	M5	30	22	4	5	16	14	M5	30	22	4	5	16
80 M	1LE15.1	2, 4, 6	71.5	10	10	**292**	–	–	342.5	102	19	M6	40	32	4	6	21.5	19	M6	40	32	4	6	21.5
90 S	1LE15.1	2, 4, 6	79.5	10	10	**347**	–	–	405	102	24	M8	50	40	5	8	27	19	M6	40	32	4	6	21.5
90 L	1LE15.1	2, 4, 6	79.5	10	10	**347**	–	–	405	102	24	M8	50	40	5	8	27	19	M6	40	32	4	6	21.5
100 L	All	2, 4, 6, 8	100.5	12	16	**397.5**	7	32	454	134	28	M10	60	50	5	8	31	24	M8	50	40	5	8	27
112 M	All	2, 4, 6 8	100.5	12	16	**390.5** **415.5**	7	32	450 475	134	28	M10	60	50	5	8	31	24	M8	50	40	5	8	27
132 S	All	2, 4, 6, 8	115.5	12	16	**466.5**	8.5	39	535.5	134	38	M12	80	70	5	10	41	28	M10	60	50	5	8	31
132 M	All	2, 4, 6, 8	115.5	12	16	**466.5**	8.5	39	535.5	134	38	M12	80	70	5	10	41	28	M10	60	50	5	8	31
160 M	All	2, 4, 6, 8	145	14.5	18	**606**	10	45	730	165	42	M16	110	90	10	12	45	42	M16	110	90	10	12	45
160 L	All	2, 4, 6, 8	145	14.5	18	**606**	10	45	730	165	42	M16	110	90	10	12	45	42	M16	110	90	10	12	45

[1] For 1LE16 motors less dimension L1.
[2] Only for 1LE15 motors.

© Innomotics 2024

Innomotics GP and Innomotics SD standard motors

IE1, IE2, NEMA Energy Efficient – self-ventilated · Frame sizes 180 M to 250 M

Dimensional drawings

Type of construction IM B3

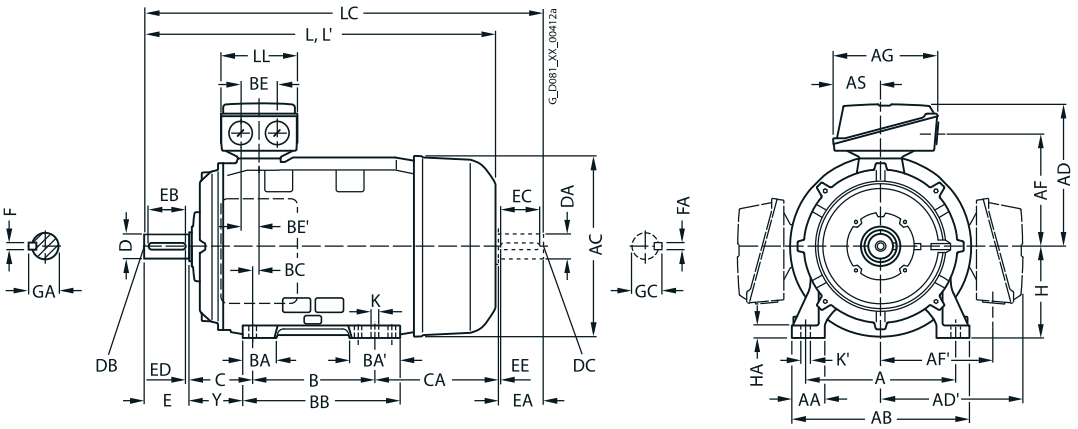

Types of construction IM B5 and IM V1

For flange dimensions, see page 1/59 (**Z** = the number of retaining holes)

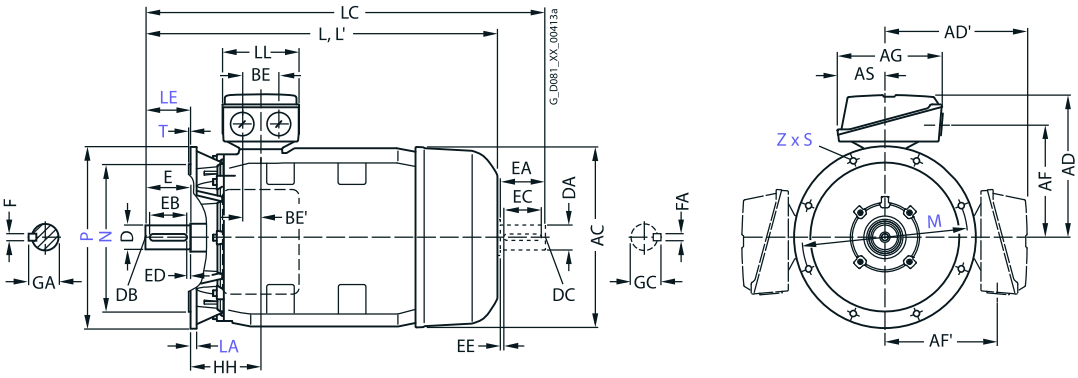

For motor			Dimension designation acc. to **IEC**																		
Frame size	Motor type 1LE1501-, 1LE1521-, 1LE1541- 1LE1601- 1LE1502-	No. of poles	A	AA	**AB**	AC	**AD**	AD'	AF	AF'	AG	AS	B	BA	BA'	BB	BC	BE	BE'	C	CA
180 M/ 180 L	1EB2[1],1EA2, 1EB2, 1EC4	2, 4, 6	279	65	**339**	356	**286**	286	234	234	189	91	241	85	120	328	34	60	30	121	202
	1EB4, 1EA6, 1EB6, 1EC6	2, 4, 6											279								
200 L	2AA4,2AA5, 2AB5, 2AC4,2AC5, 2AD5	2, 4, 6, 8	318	70	**378**	396	**315**	315	258.5	258.5	265	112	305	104	104	355	31	85	42.5	133	177
	2AA6, 2AB6, 2AC6, 2AD6	2, 4, 6, 8																			
225 S/ 225 M	2BB0, 2BD0,	4, 8	356	80	**436**	449	**338**	338	282	282	266	112	311	92	117	361	15	85	42.5	149	253
	2BB2, 2BC2, 2BD2, 2BB6, 2BC6, 2BD6	4, 6, 8											286[1]								
	2BA2, 2BA6	2											286[1]								
250 M	2CA2, 2CA6	2	406	100	**490**	497	**410**	410	322	322	319	145	349	102	102	409	24	110	55	168	230
	2CB2, 2CC2, 2CD2, 2CC6, 2CD6,	4, 6, 8																			
	2CB6	4																			300

[1] Only applicable for 1LE1502.

© Innomotics 2024

Dimensional drawings

Type of construction IM B35

For flange dimensions, see page 1/59 (**Z** = the number of retaining holes)

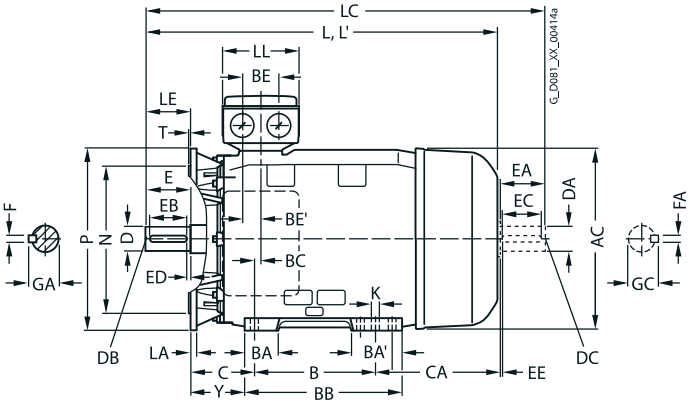

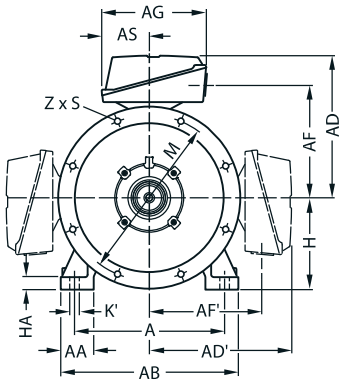

For motor	Dimension designation acc. to **IEC**									DE shaft extension							NDE shaft extension						
Motor type	**H**	HA	Y	HH	K	K'	**L**	LC[1]	LL	D	DB	E	EB	ED	F	GA	DA	DC	EA	EC	EE	FA	GC
1LE1501-, 1LE1521-, 1LE1541- 1LE1601- 1LE1502-																							
1EB2[2],1EA2, 1EB2, 1EC4	**180**	20	95	155	15	19	**668**	784	164	48	M16	110	100	5	14	51.5	48	M16	110	100	5	14	51.5
1EB4, 1EA6, 1EB6, 1EC6							**698**	814															
2AA4,2AA5, 2AB5, 2AC4,2AC5, 2AD5	**200**	25	108	164	19	25	**721**	835	197	55	M20	110	100	5	16	59	55	M20	110	100	5	16	59
2AA6, 2AB6, 2AC6, 2AD6							**746**	860															
2BB0, 2BD0	**225**	34	124	164	19	25	**788**	903	197	60	M20	140	125	10	18	64	55	M20	110	100	5	16	59
2BB2, 2BC2, 2BD2, 2BB6, 2BC6, 2BD6								963															
							848																
2BA2, 2BA6							**818**	933		55		110	100	5	16	59	48	M16				14	51.5
2CA2, 2CA6	**250**	40	138	192	24	30	**887**	1002	233	60	M20	140	125	10	18	64	55	M20	110	100	5	16	59
2CB2, 2CC2, 2CD2, 2CC6, 2CD6								1032		65						69	60		140	125	10	18	64
2CB6							**957**	1072															

[1] In the low-noise version, a second shaft extension and/or mounted encoder is not possible.

[2] Only applicable for 1LE1502.

© Innomotics 2024

Innomotics GP and Innomotics SD standard motors

IE1, IE2, NEMA Energy Efficient – self-ventilated · Frame sizes 280 S to 315 L

Dimensional drawings

Type of construction IM B3

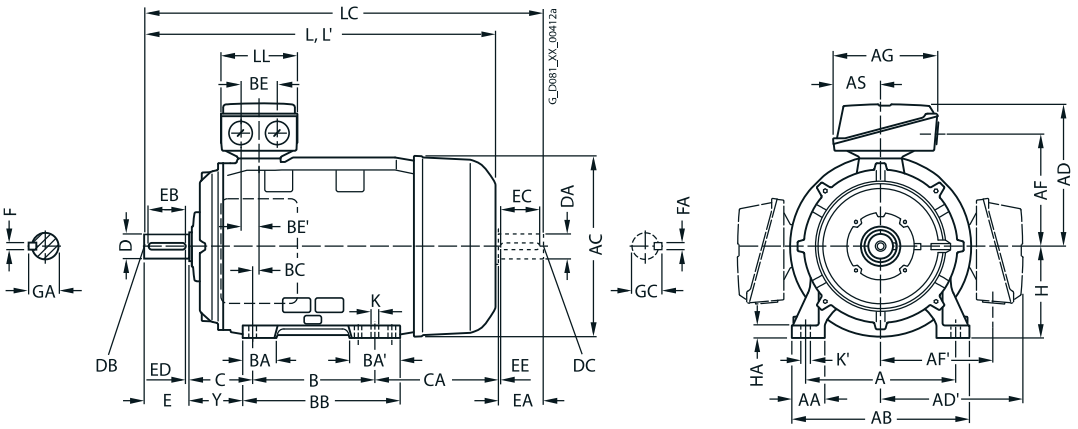

3

Types of construction IM B5 and IM V1

For flange dimensions, see page 1/59 (**Z** = the number of retaining holes)

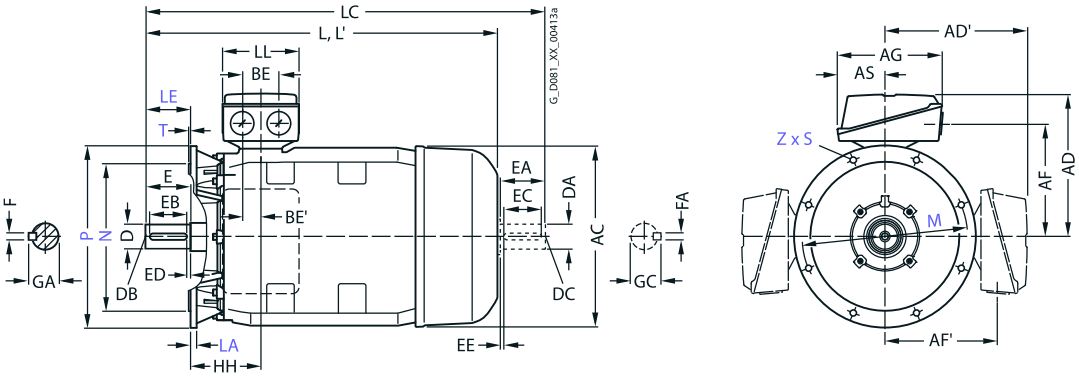

For motor			Dimension designation acc. to **IEC**																		
Frame size	Motor type 1LE1501-, 1LE1521-, 1LE1541- 1LE1601- 1LE1502-	No. of poles	A	AA	**AB**	AC	**AD**	AD'	AF	AF'	AG	AS	B	BA	BA'	BB	BC	BE	BE'	C	CA
280 S	2DA0	2	457	100	**540**	551	**433**	433	345	345	319	145	368	101	152	479	20	110	55	190	267
	2DB0, 2DC0, 2DD0	4, 6, 8																			267
280 M	2DA6	2											419								326
	2DA2																				216
	2DB2, 2DC2, 2DD2, 2DC6, 2DD6	4, 6, 8																			
	2DB6	4																			326
315 S	3AA0, 3AA2[2]	2	508	120	**610**	616	**515**	515	404	404	374	164	406	113	170	527	22	110	55	216	295
	3AB0, 3AC0, 3AD0	4, 6, 8																			
315 M	3AA2[1], 3AA5[2]	2											457			578					409
	3AB2[1]	4																			
	3AC2, 3AD2	6, 8																			
315 L[1]	3AA4	2											508			578					358
	3AB4, 3AC4, 3AD4, 3AC5, 3AD5, 3AD6	4, 6, 8																			
	3AA5, 3AA6	2											508	176	227	648					
	3AB5, 3AC6	4, 6																			

[1] For orders with screwed-on feet (order code **H01**), these screwed-on feet have 3 drilled holes on the NDE side with the dimension B 406 mm, 457 mm, and 508 mm respectively; the dimension BB is 666 mm.

[2] Only applicable for 1LE1502.

© Innomotics 2024

Innomotics GP and Innomotics SD standard motors

IE1, IE2, NEMA Energy Efficient – self-ventilated · Frame sizes 280 S to 315 L

Dimensional drawings

Type of construction IM B35

For flange dimensions, see page 1/59 (**Z** = the number of retaining holes)

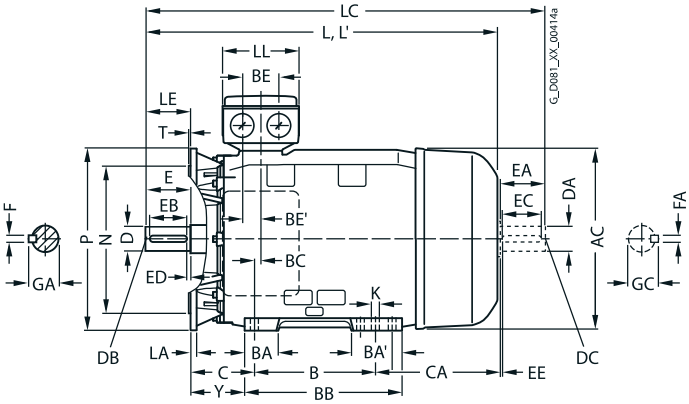

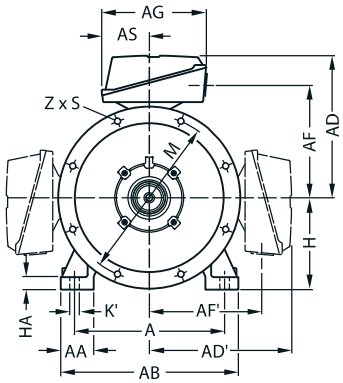

For motor	Dimension designation acc. to **IEC**									DE shaft extension							NDE shaft extension						
Motor type 1LE1501-, 1LE1521-, 1LE1541- 1LE1601- 1LE1502-	**H**	HA	Y	HH	K	K'	**L**	LC[1]	LL	D	DB	E	EB	ED	F	GA	DA	DC	EA	EC	EE	FA	GC
2DA0	**280**	40	160	210	24	30	**960**	1105	233	65	M20	140	125	10	18	69	60	M20	140	125	10	18	64
2DB0, 2DC0, 2DD0										75					20	79.5	65						69
2DA6							**1070**	1215		65					18	69	60						64
2DA2							**960**	1105															
2DB2, 2DC2, 2DD2, 2DC6, 2DD6										75					20	79.5	65						69
2DB6							**1070**	1215															
3AA0, 3AA2[2]	**315**	50	181	238	28	35	**1052**	1197	299	65	M20	140	125	10	18	69	60	M20	140	125	10	18	64
3AB0, 3AC0, 3AD0							**1082**	1227		80		170	140	25	22	85	70					20	74.5
3AA2, 3AA5[2]							**1217**	1362		65		140	125	10	18	69	60					18	64
3AB2							**1247**	1392		80		170	140	25	22	85	70					20	74.5
3AC2, 3AD2							**1082**	1227															
3AA4							**1217**	1362		65		140	125	10	18	69	60					18	64
3AB4, 3AC4, 3AD4, 3AC5, 3AD5, 3AD6							**1247**	1392		80		170	140	25	22	85	70					20	74.5
3AA5, 3AA6			146				**1372**	1517		65		140	125	10	18	69	60					18	64
3AB5, 3AC6							**1402**	1547		80		170	140	25	22	85	70					20	74.5

[1] In the low-noise version, a second shaft extension and/or mounted encoder is not possible.

[2] Only applicable for 1LE1502.

© Innomotics 2024

Innomotics SD standard motors next generation

© Innomotics 2024

4

© Innomotics 2024

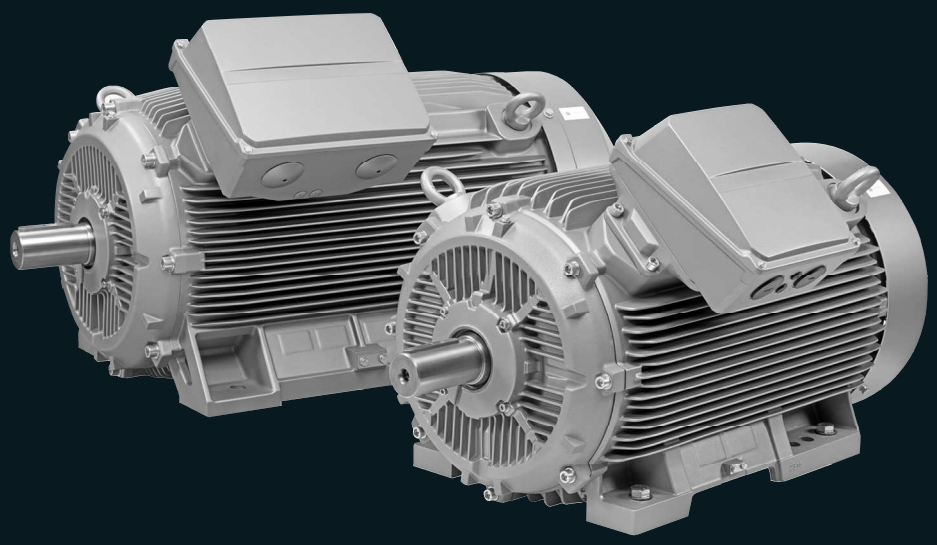

© Innomotics 2024

4 Innomotics SD standard motors next generation

4/2 Orientation

4/10 Article number code

4/12 IE4 Super Premium Efficiency

Cast-iron series Innomotics SD
4/12 _ 1LE5504 Basic Line
4/14 _ 1LE5504 Basic Line with increased power
4/15 _ 1LE5604 Performance Line
Cast-iron series Innomotics SD Add
4/16 _ 1LE5534 Basic Line
4/18 _ 1LE5634 Performance Line
Cast-iron series Innomotics SD Pro
4/19 _ 1LE5584 Basic Line

4/20 IE3 Premium Efficiency

Cast-iron series Innomotics SD
4/20 _ 1LE5503 Basic Line
4/21 _ 1LE5603 Performance Line
Cast-iron series Innomotics SD Add
4/22 _ 1LE5533 Basic Line
4/24 _ 1LE5633 Performance Line
Cast-iron series Innomotics SD Pro
4/25 _ 1LE5583 Basic Line
4/26 _ 1LE5683 Performance Line

4/27 Article No. supplements and special versions

Voltages
4/27 _ Cast-iron series Innomotics SD 1LE55, 1LE56
Types of construction
4/31 _ Cast-iron series Innomotics SD 1LE55, 1LE56
Motor protection
4/34 _ Cast-iron series Innomotics SD 1LE55, 1LE56
Terminal box position
4/35 _ Cast-iron series Innomotics SD 1LE55, 1LE56
Options
4/36 _ Cast-iron series Innomotics SD 1LE55, 1LE56
4/43 Accessories

4/45 Dimensions

4/45 Notes on the dimensions
4/45 Dimension sheet generator
4/46 Cast-iron series Innomotics SD, SD Add and SD pro
Cast-iron series Innomotics SD
4/47 _ IE4 – Frame sizes 280 S to 315 L
Cast-iron series Innomotics SD Add
4/49 _ IE4 – Frame sizes 315 S to 315 L
Cast-iron series Innomotics SD Pro
4/50 _ IE4 – Frame sizes 280 S to 315 L
4/51 Cast-iron series Innomotics SD, SD Add and SD pro
Cast-iron series Innomotics SD
4/54 _ IE4, IE3 – Frame sizes 315 L to 355 L
Cast-iron series Innomotics SD Add
4/55 _ IE4, IE3 – Frame sizes 315 L to 450
Cast-iron series Innomotics SD Pro
4/56 _ IE4, IE3 – Frame sizes 315 L to 450

© Innomotics 2024

Innomotics SD standard motors next generation

Overview

The Innomotics SD next generation is a new scalable generation of low-voltage motors. With their impressive performance and the additional versatility in their range of applications, this new motor series offers entry into a future-proof drive technology.

In addition to the future topics of digitalization and energy efficiency, this motor generation was developed with the focus on design optimization, which has resulted in a very compact motor design with a high power density.
A standardized option range and the variable terminal box concept also enable flexible use of the motors in different system configurations and applications. The fact that the motors can either be operated on the line supply or with a converter is part of their versatility.

The following versions are available in the new 1LE5 motor series, differentiated by their performance features and functionality:

- **Innomotics SD**
  These motors are characterized by reliable and powerful performance even in the toughest environmental conditions. The characteristics with higher torques ensure that higher starting and breakaway torques are available. Innomotics SD can be used as standard in the European Economic Area and have the CE-mark and UKCA-marking. The required minimum efficiency levels have to be considered when selecting the motor.
- **Innomotics SD Add**
  The characteristic product feature of the Innomotics SD Add are the low starting currents. These not only meet industry-specific specifications, above all, in process industries, but also have a positive impact on the operating quality (higher power system stability, lower thermal load, increased motor lifetime).
  Innomotics SD Add can be used as standard in the European Economic Area and North America. The required minimum efficiency levels have to be considered when selecting the motor. These motors have in addition to the CE-mark and UKCA-marking also approvals for USA (UL safety and DoE listing) as well as approvals for Canada (CSA safety and CSA Energy Efficiency Verification). They are supplied with the electrical values stamped on the rating plate in accordance with IEC and EISA requirements. In addition, many other certificates are optionally available.
- **Innomotics SD Pro**
  The Innomotics SD Pro range is characterized by its extremely flexible concept, which makes it universally deployable, in any plant, in any country in the world. The Premium winding insulation system of these motors is designed such that converter operation is possible at voltages up to 690 V, which does not require any dv/dt or sinewave filter at the converter output.
  The permissible peak-peak voltages are:
  $\hat{U}_{phase\text{-}to\text{-}phase} \leq 4400$ V and $\hat{U}_{phase\text{-}to\text{-}ground} \leq 3000$ V
  Innomotics SD Pro can be used as standard in the European Economic Area and North America. The required minimum efficiency levels have to be considered when selecting the motor. These motors have in addition to the CE-mark and UKCA-marking also approvals for USA (UL safety and DoE listing) as well as approvals for Canada (CSA safety and CSA Energy Efficiency Verification). They are supplied with the electrical values stamped on the rating plate in accordance with IEC and EISA requirements. In addition, many other certificates are optionally available.

Innomotics SD variants

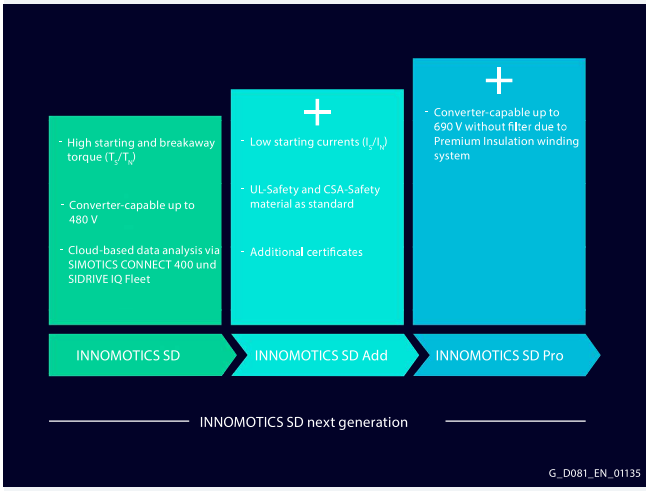

© Innomotics 2024

Benefits

- Rugged design in the cast-iron housing increases reliability and availability.
- Compact dimensions/high power density enable use even in confined space conditions.
- High energy efficiency in line (IE3, IE4) and converter operation (IES2) enable energy-saving operation.
- A standardized range of options and a variable terminal box concept increase the flexible adaptation to the requirements of the application.
- Support of line and converter operation reduces the variety.
- Provision of comprehensive CAD data simplifies the design and engineering phase.

Application

Innomotics SD motors are ideal for use in a large number of standard applications, such as

- Pumps, fans, compressors
- Conveyors
- Winders
- Mixers
- Extruders
- Cranes

They are preferably used in industries such as

- Mining, cement
- Chemical industry
- Oil and gas
- Steel industry
- Water, waste water
- Heating, ventilation and air conditioning (HVAC)
- Pulp and paper industry
- Marine engineering

© Innomotics 2024

Innomotics SD standard motors next generation

Configuration

Terminal box positions

Standard [2]	Rotated 180° [2]		Rotated 90°, cable entry DE [2]		Rotated 90°, cable entry NDE [2]	
1LE5...-.....-... ■	1LE5...-.....-... ■ -Z	■■■	1LE5...-.....-... ■ -Z	■■■	1LE5...-.....-... ■ -Z	■■■

Frame size 315 extended power output; Frame size 355, 400, 450

4

© Innomotics 2024

Configuration

Terminal box positions for flanged types of construction only

Standard — 1LE5...-.....-... ■ | Rotated 180° — 1LE5...-.....-... ■ | ■■■ | 1LE5...-.....-... ■ | ■■■ | 1LE5...-.....-... ■ | ■■■

Frame size 315 extended power output; Frame size 355, 400, 450

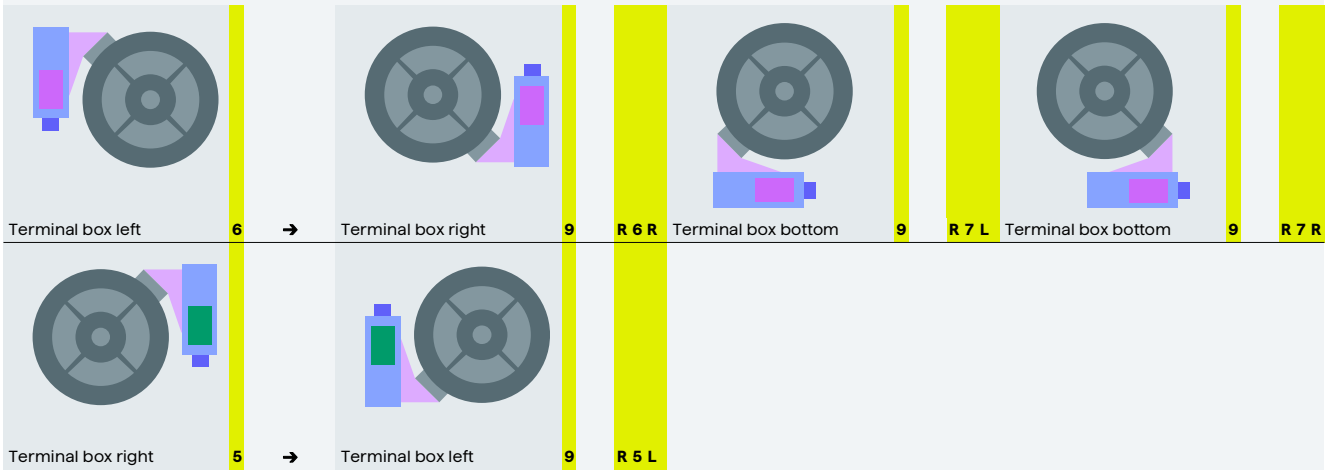

Standard [1] — 1LE5...-.....-... ■ | Rotated 180° [1] — 1LE5...-.....-... ■ | ■■■ | Rotated 90°, cable entry DE [1] — 1LE5...-.....-... ■ | ■■■ | Rotated 90°, cable entry NDE [1] — 1LE5...-.....-... ■ | ■■■

Frame size 315 standard power output; Frame size 280

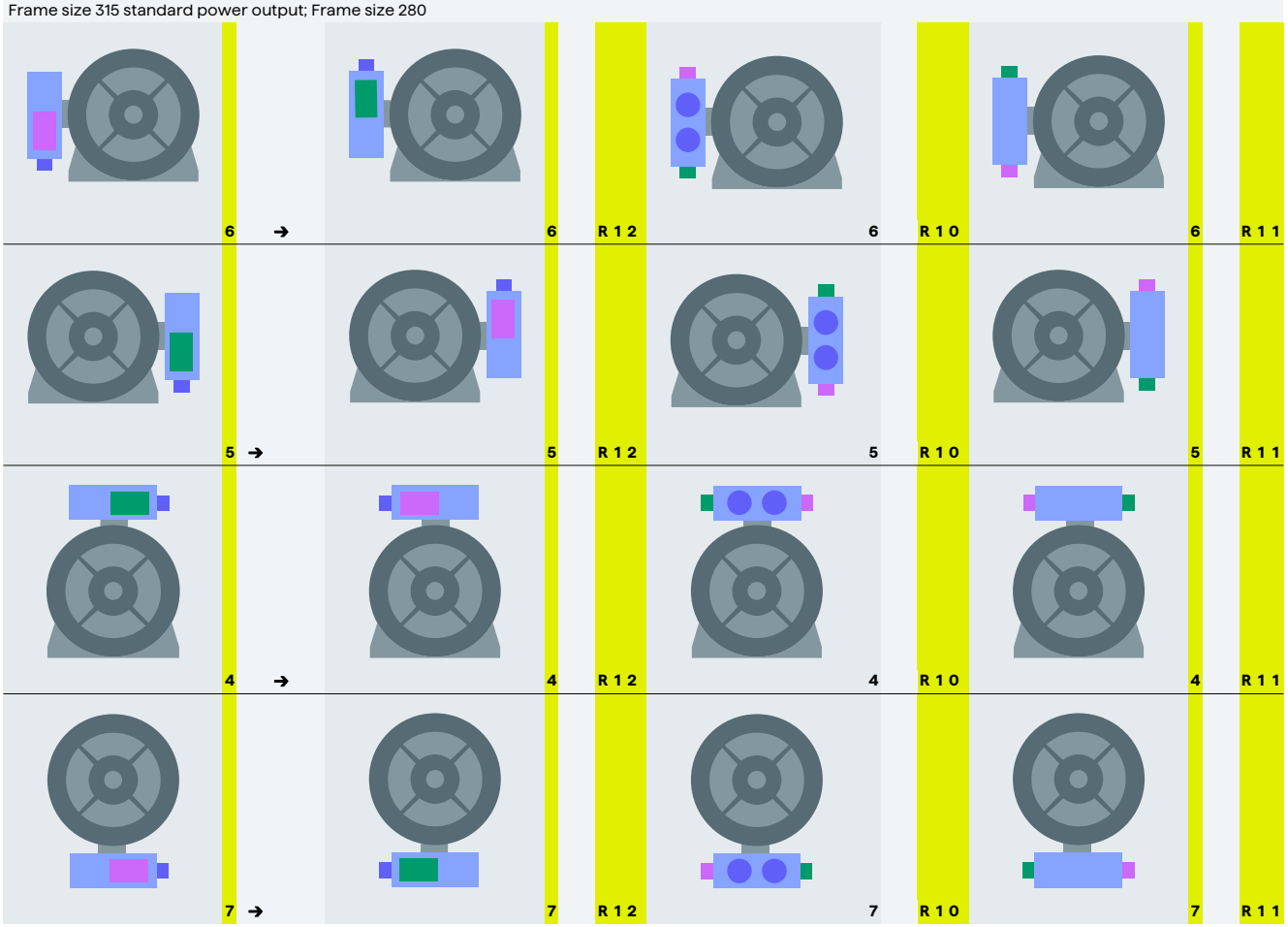

4

© Innomotics 2024

Innomotics SD standard motors next generation

Types of construction

IM B3

IM B5

Legend

- Auxiliary terminal box 1 (3)
- Auxiliary terminal box 2 (4)
- Terminal box
- Adapter
- Cable entry

[1] Only for frame size 280 (for all motor types).
Only for frame size 315 if 11th position of Article No.
for all poles **0**, **2**, **4**, **5**; for 6-, 8-pole motors **6**.

[2] Only for frame size 315 if 11th position of Article No.
for 2-, 4-pole motors **6**, **7**, for 6-, 8-pole motors **7**, **8**.

© Innomotics 2024

Technical specifications

Overview of technical specifications

This table lists the most important technical specifications. For more information and details, see Catalog Section 1 "Introduction".

Type of motor	Innomotics SD 1LE5 IEC Low-Voltage Motors
Connection types	Star/delta connection The connection type to be used can be taken from the Article No. supplements for the required motor.
Number of poles	2, 4, 6, 8
Frame sizes	280 S ... 450
Rated power	37 ... 1000 kW
Frequencies	50 Hz and 60 Hz
Versions	_ IE3 (Premium Efficiency) _ IE4 (Super Premium Efficiency)
Marking	IEC 60034-30-1 IE3, IE4: 2, 4, 6 and 8-pole
Rated speed (synchronous speed)	750 ... 3600 rpm
Rated torque	240 ... 8100 Nm
Insulation of the stator winding in accordance with EN 60034-1 (IEC 60034-1)	_ SD and SD Add: Temperature class 155 (F), utilized to temperature class 130 (B) DURIGNIT IR 2000 insulation system _ SD Pro: Temperature class 155 (F), utilized to temperature class 155 (F) DURIGNIT IR 2000 insulation system
Degree of protection according to EN 60034-5 (IEC 60034-5)	IP55 as standard
Cooling in accordance with EN 60034-6 (IEC 60034-6)	_ Self-ventilated (IC411) _ Forced-air cooled motors w/o ext. fan/fan cover (IC418) _ Forced-air cooled (IC416)
Permissible coolant temperature and installation altitude	−20 ... +40 °C as standard, installation altitude up to 1000 m above sea level. See "Coolant temperature and installation altitude" in Catalog Section 1 "Introduction".
Standard voltages according to EN 60038 (IEC 60038)	50 Hz: 400 V, 500 V, 690 V The voltage used can be found in the "Selection and ordering data" for the required motor.
Type of construction according to EN 60034-7 (IEC 60034-7)	_ Without flange: IM B3, IM B6, IM B7, IM B8, IM V5, IM V6 _ With flange: IM B5, IM V1, IM V3, IM B35
Paint finish Suitability of paint finish for climate group according to IEC 60721, Part 2-1	Standard: color RAL 7030 stone gray See "Paint finish" in Catalog Section 1 "Introduction".
Vibration severity grade according to EN 60034-14 (IEC 60034-14)	Grade A (normal – without special vibration requirements) Optionally: Grade B (with special vibration requirements) See "Balance and vibration severity" in Catalog Section 1 "Introduction".
Shaft extension according to DIN 748 (IEC 60072)	Balancing type: Half-key balancing as standard See "Balance and vibration severity" in Catalog Section 1 "Introduction".
Sound pressure level according to EN ISO 1680 (tolerance +3 dB)	The sound pressure level is listed in the selection and ordering data for the required motor.
Weights	The weight is listed in the selection and ordering data for the required motor.
Modular mounting concept	Rotary pulse encoder, brake, separately driven fan or prepared for mountings
Consistent series concept	_ Terminal box diagonally split - and can be optionally rotated through 4 x 90° _ Bearings at DE and NDE are of identical design, reinforced bearings available as an option
Options	See "Article No. supplements and special versions"

Converter operation

The motors are suitable for line operation and optionally for converter operation (bearing insulation NDE, order code **L51**). The values specified in the selection tables apply for pure sinusoidal supplies.

Rated voltage

The tolerance for the rated voltage is in accordance with EN 60034-1 in all cases, a rated voltage range is not specified.

Motor protection

A motor protection function can be implemented using the I2t sensing circuit implemented in the converter software.

If required, more precise motor protection can be provided by directly measuring the temperature using Pt100 / Pt1000 resistance thermometers or PTC thermistors in the motor winding. Some converters from Siemens determine the motor temperature using the resistance of the temperature sensor. They can be set to a required temperature for alarm and tripping.

© Innomotics 2024

Technical specifications

Bearings

To avoid damage caused by bearing currents, insulated bearings (**L51**) must be ordered.

When operating multiphase induction motors with a converter, the bearings are electrically stressed as a result of a capacitively induced voltage across the bearing lubricating film (as a result of the inherent principle of operation). The physical cause of this is the common-mode voltage at the converter output that is inherent in the control method for a converter: The sum of the three phase voltages is – in contrast to pure line operation – not equal to zero at every point in time. The high-frequency, pulsed common-mode voltage results in a residual current that flows back to the converter DC link via the internal capacitances of the motor, the motor housing and the grounding circuit. The machine's internal capacitances include the main insulation winding capacitance, the geometric capacitance between the rotor and stator, the lubricating film capacitance and the capacitance of any bearing insulation that may be present. The current flowing through the internal capacitances is proportional to the gradient, i.e. the voltage change of the common-mode voltage ($i(t) = C \cdot du/dt$).

4

In order to apply currents to the motor which are sinusoidal as far as possible (smooth running, oscillation torques, stray losses), a high clock frequency is required for the converter's output voltage. The related (very steep) switching edges of the converter output voltage (and also, therefore, of the common-mode voltage) cause correspondingly high capacitive currents and voltages on the machine's internal capacitances.

In the worst-case scenario, the capacitive voltage induced via the bearing can lead to random arcing through the bearing lubricating film, thus causing premature bearing aging or damage. (The current pulses caused by the arcing across the lubricating film are referred to as EDM (Electrostatic Discharge Machining) currents in the literature.)

This physical effect, which occurs in isolated cases, has mostly been observed in connection with larger motors. EMC-compliant installation of the drive system is a basic prerequisite for preventing premature bearing damage via bearing currents. The most important measures for reducing damage to bearings.

- Insulated bearing at the non-drive end (NDE) (order code **L51**)
- Use cables with a symmetrical cable cross-section

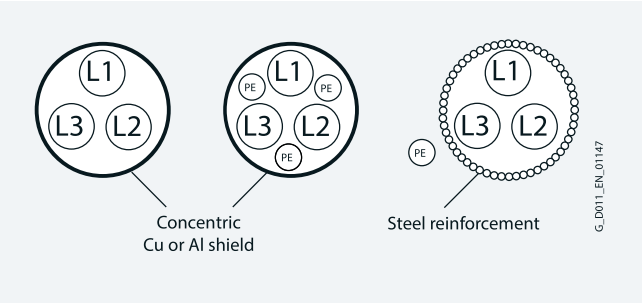

- Preference given to a supply with insulated neutral point (IT system)
- Using grounding cables with low impedance over a wide frequency range (DC up to approximately 70 MHz): for example, plaited copper ribbon cables, HF litz wires
- Separate HF equipotential-bonding cable between motor housing and driven machine
- Separate HF equipotential-bonding cable between motor housing and converter PE busbar
- 360° HF contacting of the cable shield on the motor housing and the converter PE busbar. This can be achieved using EMC screwed glands on the motor end and EMC shield clips at the converter, for example
- Using motor reactors at the converter
- Common-mode filters at the converter output.

Thermal torque limits

In the case of self-ventilated motors, the thermally admissible load torques are reduced for continuous operation for speeds below the rated speed. This must be taken into account for applications, especially those that do not have a square law load torque. Also in the case of forced-air cooled motors (order code **F70**), the maximum load torques are reduced slightly for high speed ranges.

When motors are operated at speeds above their rated speed (in the field-weakening range), the maximum load torque is also reduced.

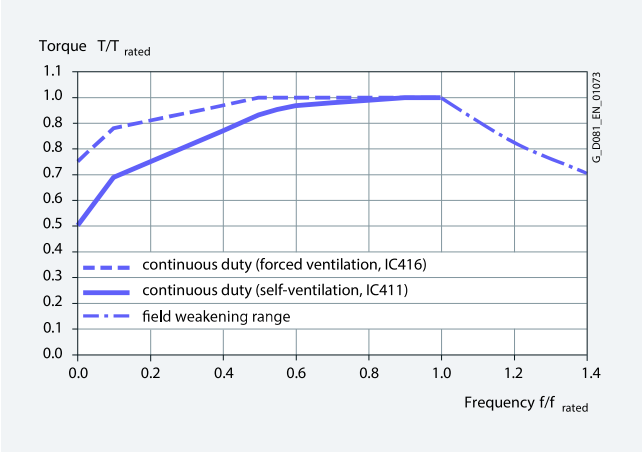

1LE5 motors of frame size 280 to 450
The current data can be obtained in the SIZER (www.siemens.com/sizer) configuration tool.

© Innomotics 2024

More information

For further information, please get in touch with your local Siemens contact and use the Siemens Product Configurator.

Contacts: innomotics.com/hub/de/contact/map

SPC: configurator.innomotics.com

Here, you can find out about certain technologies through Siemens contact partners worldwide.

Wherever possible, you will find a local contact for:

_ Technical support
_ Spare parts/repairs
_ Service
_ Training
_ Sales
_ Technical consultation/engineering

You start by selecting a:

_ country
_ product or
_ sector.

4

© Innomotics 2024

Innomotics SD standard motors next generation

Article number code

Selection and ordering data

The article number consists of a combination of digits and letters and is divided into three hyphenated blocks to provide a better overview, e.g.:
1LE5504-3AA63-4AA2-Z
H00

The first block (positions 1 to 7) identifies the motor type. The second block (positions 8 to 12) defines the motor frame size and length, the number of poles and power and in some cases the frequency/voltage. In the third block (positions 13 to 16), the frequency/voltage, type of construction and further design features are encoded.

For deviations in the second and third block from the catalog codes either **Z** or **90** should be used as appropriate.

Ordering data:

- Complete Article No. and order code(s) or plain text
- If a quotation has been requested, please specify the quotation number in addition to the Article No.
- When ordering a complete motor as a spare part, please specify the works serial No. for the previously supplied motor as well as the Article No.

Structure of the Article No.:	Position: 1	2	3	4	5	6	7	-	8	9	10	11	12	-	13	14	15	16		
1st to 4th position: Digit, letter, letter, digit	_ Self-ventilated by fan mounted on and driven by the rotor _ Forced-air cooled by air flow from the fan to be driven with option extension **F90**	1	L	E	5															
5th position: Digit	Cast-iron housing Basic Line Cast-iron housing Performance Line					5 6														
6th to 7th position: 2 digits	Innomotics SD motors with IE4 Super Premium Efficiency Innomotics SD Add motors with IE4 Super Premium Efficiency Innomotics SD Pro motors with IE4 Super Premium Efficiency Innomotics SD motors with IE3 Premium Efficiency Innomotics SD Add motors with IE3 Premium Efficiency Innomotics SD Pro motors with IE3 Premium Efficiency						0 4 3 4 8 4 0 3 3 4 8 3													
8th, 9th and 11th position: Digit, letter, digit	**Motor frame size** (frame size as a combination of shaft height and overall length, encoded)								2 ... 4	D ... B		0 ... 8								
10th position: Letter	**No. of poles** A: 2-pole B: 4-pole C: 6-pole D: 8-pole										A B C D									
12th and 13th position: 2 digits	**Voltage, circuit and frequency** (encoded with two digits, 9-0 requires order code M.. (e.g. M1Y))												0 ... 9		0 ... 7					
14th position: Letter	**Type of construction** (encoded with A ... Y)															A ... Y				
15th position: Letter	**Motor protection** (encoded with A ... Z; Z requires order code Q.. (e.g. Q3A))																A ... Z			
16th position: Digit	**Terminal box position** Terminal box base left with terminal box at the top [1] Terminal box base right with terminal box at the top [1] Terminal box base left with terminal box 45° [1] Terminal box base right with terminal box 45° [1] Terminal box at the top [2] Terminal box on right-hand side Terminal box on left-hand side Terminal box at the bottom Special mounted components																	0 1 2 3 4 5 6 7 9		
	Special order versions: encoded – additional order code required not encoded – additional plain text required																		-	Z

Technical data and rated voltage:

The technical data usually refer to a rated voltage of 400 V and 50 Hz which is related to position 12 and 13 = 34 (voltage code). This voltage code also defines the rated voltage for 60 Hz which is 460 V. From shaft (frame size) 400 upwards, the standard voltage code changes for some variants (marked with a footnote). In this case, the technical data refer to a rated voltage of:

- 690 V and 50 Hz (position 12 and 14 = 47), or
- 575 V and 60 Hz (position 12 and 14 = 40)

[1] Only for frame size 315 if 11th position of Article No. for 2-, 4-pole motors **6**, **7**, for 6-, 8-pole motors **7**, **8** and for frame size 355 to 450.

[2] Only for frame size 280 and 315 if 11th position of Article No. for all poles **0**, **2**, **4**, **5**; for 6-, 8-pole motors **6**.

© Innomotics 2024

Selection and ordering data

Ordering example

Selection criteria	Requirement	Structure of the Article No.
Motor type 1LE5	Standard motor with IE4 Super Premium Efficiency, self-ventilated, IP55 degree of protection, cast-iron version, Performance Line	**1LE5604-■■■■■-■■■■**
Motor frame size/No. of poles/Speed	315 L/2-pole/3000 rpm	**1LE5604-3AA6■-■■■■**
Rated power	250 kW	
Voltage and frequency	400 VΔ/690 VY, 50 Hz	**1LE5604-3AA63-4■■■**
Type of construction with special version	IM V5 with protective cover [1]	**1LE5604-3AA63-4C■■-Z H00**
Motor protection	1 or 3 PTC thermistors – for tripping (2 terminals)	**1LE5604-3AA63-4CB■-Z H00**
Terminal box position	Terminal box base left with terminal box 45°	**1LE5604-3AA63-4CB2-Z H00**

4

[1] Standard without protective cover – the protective cover is defined with order code **H00** and must be ordered in addition to the Article No. with **-Z** and this order code.

© Innomotics 2024

Innomotics SD standard motors next generation

IE4

Cast-iron series Innomotics SD 1LE5504 Basic Line – self-ventilated or forced-air cooled

Selection and ordering data

P_{rated}, 50 Hz/ P50 kW	Frame size FS	Operating values at rated power n_{rated}, 50 Hz rpm	T_{rated}, 50 Hz Nm	Different IE class 60 Hz/P60	η_{rated}, 50 Hz, 4/4 %	η_{rated}, 50 Hz, 3/4 %	η_{rated}, 50 Hz, 2/4 %	$\cos\varphi_{rated}$, 50 Hz, 4/4	I_{rated}, 50 Hz, 400 V A	T_{LR}/T_{rated}, 50 Hz	I_{LR}/I_{rated}, 50 Hz	T_B/T_{rated}, 50 Hz	L_{pfA}, 50 Hz dB(A)	L_{WA}, 50 Hz dB(A)	Cast-iron series 1LE5504 Basic Line Article No. ▲ New	$m_{IM\ B3}$ kg	J kgm²
_ Cooling: Self-ventilated (IC411)																	
_ Efficiency according to IEC 60034-30-1: IE4 Super Premium Efficiency																	
_ Insulation: Thermal class 155 (temperature class F), IP55 degree of protection, utilization in accordance with thermal class 130 (temperature class B)																	
2-pole: 3000 rpm at 50 Hz																	
5.5	**132 S**	2950	17.8		90.9	91.4	90.7	0.88	9.9	2.6	8.5	3.8	70	83	▲ **1LE5504-1CA0** ■-■■■■	72	0.023
7.5	**132 S**	2950	24.5		91.7	92.2	92.1	0.89	13.3	2.7	8.5	3.9	70	83	▲ **1LE5504-1CA1** ■-■■■■	80	0.027
11	**160 M**	2955	35.5		92.6	92.7	92	0.89	19.3	2.6	7.9	3.4	69	82	▲ **1LE5504-1DA2** ■-■■■■	134	0.061
15	**160 M**	2960	48.5		93.3	93.7	93.4	0.89	26	2.8	8.5	3.5	72	85	▲ **1LE5504-1DA3** ■-■■■■	144	0.07
18.5	**160 L**	2960	60		93.7	93.6	93.1	0.89	32	3	8.5	3.5	72	85	▲ **1LE5504-1DA4** ■-■■■■	162	0.08
22	**180 M**	2972	71		94	94.2	93.8	0.89	38	2.6	8	3.4	69	82	▲ **1LE5504-1EA2** ■-■■■■	214	0.173
30	**200 L**	2970	96		94.5	94.8	94.5	0.89	51	2.5	7.5	3	73	86	▲ **1LE5504-2AA4** ■-■■■■	291	0.271
37	**200 L**	2972	119		94.8	94.9	94.5	0.89	63	2.8	8.5	3.1	73	86	▲ **1LE5504-2AA5** ■-■■■■	300	0.286
45	**225 M**	2979	144		95	95	94.3	0.89	77	2.9	8.5	3.4	73	87	▲ **1LE5504-2BA2** ■-■■■■	354	0.46
55	**250 M**	2982	176		95.3	95.5	95	0.89	94	2.7	8.4	3.1	74	88	▲ **1LE5504-2CA2** ■-■■■■	450	0.767
75	**280 S**	2978	240		95.6	95.8	95.6	0.9	126	2.8	8.5	3.2	73	87	**1LE5504-2DA0** ■-■■■■	556	0.797
90	**280 M**	2980	290		95.8	96.1	95.8	0.9	151	2.7	8.5	3	73	87	**1LE5504-2DA2** ■-■■■■	600	0.895
110	**315 S**	2988	350		96	95.9	95.1	0.9	184	2.5	9.1	3.7	72	86	**1LE5504-3AA0** ■-■■■■	916	1.84
132	**315 M**	2988	420		96.2	96.2	95.6	0.9	220	2.6	9.8	3.9	73	88	**1LE5504-3AA2** ■-■■■■	1010	2.08
160	**315 L**	2986	510		96.3	96.3	95.8	0.9	265	2.5	9.6	3.9	75	89	**1LE5504-3AA4** ■-■■■■	1050	2.25
200	**315 L**	2986	640		96.5	96.6	96.2	0.91	330	2.7	9.7	3.7	74	89	**1LE5504-3AA5** ■-■■■■	1240	2.75
250	**315 L**	2986	800		96.5	96.4	95.7	0.88	425	3	9.3	4.2	80	94	**1LE5504-3AA6** ■-■■■■	1340	2.82
315	**315 L**	2986	1010		96.5	96.3	95.5	0.87	540	3.5	9.9	4.2	81	96	**1LE5504-3AA7** ■-■■■■	1520	3.27
4-pole: 1500 rpm at 50 Hz																	
5.5	**132 S**	1475	35.5		91.9	92.3	91.7	0.8	10.8	2.5	7.6	3.5	57	70	▲ **1LE5504-1CB0** ■-■■■■	80	0.046
7.5	**132 M**	1475	48.5		92.6	92.7	91.7	0.81	14.4	2.7	8.2	3.8	57	70	▲ **1LE5504-1CB2** ■-■■■■	93	0.059
11	**160 M**	1482	71		93.3	93.4	92.5	0.82	20.5	2.9	8.5	3.6	62	75	▲ **1LE5504-1DB2** ■-■■■■	146	0.136
15	**160 L**	1482	97	IE3	93.9	94.1	93.6	0.82	28	3	8.5	3.6	66	79	▲ **1LE5504-1DB4** ■-■■■■	170	0.158
18.5	**180 M**	1480	119		94.2	94.7	94.4	0.82	34.5	2.6	7.9	3	68	81	▲ **1LE5504-1EB2** ■-■■■■	230	0.253
22	**180 L**	1480	142		94.5	94.7	94.4	0.82	41	2.8	8.5	3.6	68	81	▲ **1LE5504-1EB4** ■-■■■■	234	0.272
30	**200 L**	1486	193		94.9	95.1	94.7	0.82	56	2.8	8	3.3	65	78	▲ **1LE5504-2AB5** ■-■■■■	295	0.516
37	**225 S**	1486	240		95.2	95.5	95.3	0.85	66	2.6	8.5	3.1	61	75	▲ **1LE5504-2BB0** ■-■■■■	365	0.743
45	**225 M**	1488	290		95.4	95.7	95.5	0.85	80	3	8.5	3.3	65	79	▲ **1LE5504-2BB2** ■-■■■■	410	0.884
55	**250 M**	1488	355		95.7	96	95.8	0.86	96	2.5	8.4	3	62	76	▲ **1LE5504-2CB2** ■-■■■■	488	1.33
75	**280 S**	1490	480		96	96.2	96	0.87	130	2.8	8.5	3.4	64	78	**1LE5504-2DB0** ■-■■■■	610	1.74
90	**280 M**	1488	580		96.1	96.4	96.3	0.88	154	2.8	8.5	3.4	67	81	**1LE5504-2DB2** ■-■■■■	681	2.03
110	**315 S**	1491	700		96.3	96.4	96	0.86	192	3.3	8.6	3.3	66	80	**1LE5504-3AB0** ■-■■■■	922	2.74
132	**315 M**	1490	850		96.4	96.6	96.3	0.85	235	3.3	8.2	3.2	67	81	**1LE5504-3AB2** ■-■■■■	942	2.91
160	**315 L**	1490	1030		96.6	96.8	96.6	0.85	280	3.3	7.9	3.1	68	83	**1LE5504-3AB4** ■-■■■■	1200	3.79
200	**315 L**	1490	1280		96.7	96.9	96.8	0.85	350	3.4	7.8	3.1	69	83	**1LE5504-3AB5** ■-■■■■	1290	4.37
250	**315 L**	1490	1600	IE3	96.7	96.8	96.5	0.86	435	2.8	7.9	3.2	75	90	**1LE5504-3AB6** ■-■■■■	1500	4.98
315	**315 L**	1490	2000	IE3	96.7	96.7	96.3	0.83	570	3.2	8.5	3.5	75	90	**1LE5504-3AB7** ■-■■■■	1560	5.39

Voltages [1]		Version						Order code
50 Hz 400 VΔ/690 VY	60 Hz [1] 460 VΔ	**Standard**	**3**	**4**				–
50 Hz 500 VΔ		Without additional charge	**4**	**0**				–
50 Hz 690 VΔ		With additional charge	**4**	**7**				–
For other voltages [1] and more information, see from page 4/27			■	■				...
Types of construction		Version						Order code
Without flange	IM B3	**Standard**			**A**			–
With flange	IM B5	With additional charge			**F**			–
For other types of construction and more information, see from page 4/31					■			...
Motor protection		Version						Order code
Without		**Standard**				**A**		–
PTC thermistor with 3 temperature sensors		With additional charge				**B**		–
For other motor protection and more information, see from page 4/34						■		...
Terminal box position		Version						Order code
Terminal box base right with terminal box 45° [2) 3)]		**Standard**					**3**	–
Terminal box top [2) 4)]		**Standard**					**4**	–
For other terminal box positions and more information, see from page 4/35							■	...
Special versions								Order code(s)
Forced-air cooled motors w/o ext. fan/fan cover (IC418)		**1LE5504-....**	■-	■■■■			-Z	F90+...+...+...
For options, see from page 4/36		**1LE5504-....**	■-	■■■■			-Z	...+...+...+...

Note:
Further IE4 motors are available as standard Innomotics SD (1LE15) motors, see page 3/9 and 3/10.

For legends and foot notes, see page 4/14.

© Innomotics 2024

Selection and ordering data

P_{rated}, 50 Hz/ P50 kW	Frame size FS	Operating values at rated power n_{rated}, 50 Hz rpm	T_{rated}, 50 Hz Nm	Different IE class 60 Hz/P60	η_{rated}, 50 Hz, 4/4 %	η_{rated}, 50 Hz, 3/4 %	η_{rated}, 50 Hz, 2/4 %	$\cos\varphi_{rated}$, 50Hz, 4/4	I_{rated}, 50 Hz, 400 V A	T_{LR}/T_{rated}, 50 Hz	I_{LR}/I_{rated}, 50 Hz	T_B/T_{rated}, 50 Hz	L_{pfA}, 50 Hz dB(A)	L_{WA}, 50 Hz dB(A)	Cast-iron series 1LE5504 Basic Line Article No. ▲ New	$m_{IM\ B3}$ kg	J kgm²
_ Cooling: Self-ventilated (IC411)																	
_ Efficiency according to IEC 60034-30-1: IE4 Super Premium Efficiency																	
_ Insulation: Thermal class 155 (temperature class F), IP55 degree of protection, utilization in accordance with thermal class 130 (temperature class B)																	
6-pole: 1000 rpm at 50 Hz																	
3	**132 S**	982	29		88.6	88.6	87.2	0.71	6.9	2.5	7.2	3.4	56	69	▲ **1LE5504-1CC0** ■-■■■■	72	0.048
4	**132 M**	984	39		89.5	89.5	88.2	0.72	9	2.8	8	4	56	69	▲ **1LE5504-1CC2** ■-■■■■	80	0.06
5.5	**132 M**	982	53	IE3	90.5	90.4	89	0.72	12.2	3.1	8	3.9	56	69	▲ **1LE5504-1CC3** ■-■■■■	97	0.079
15	**180 L**	986	145	IE3	92.9	93.2	92.6	0.8	29	2.7	7.8	3.1	66	79	▲ **1LE5504-1EC4** ■-■■■■	214	0.308
18.5	**200 L**	988	179	IE3	93.4	93.8	93.5	0.8	35.5	2.5	8	3	59	72	▲ **1LE5504-2AC4** ■-■■■■	259	0.565
22	**200 L**	988	215	IE3	93.7	93.9	93.4	0.81	42	2.7	8	3.4	59	72	▲ **1LE5504-2AC5** ■-■■■■	280	0.65
30	**225 S**	988	290	IE3	94.2	94.7	94.7	0.82	56	2.9	8	3	61	74	▲ **1LE5504-2BC2** ■-■■■■	374	1.03
37	**250 M**	988	360	IE3	94.5	95	95	0.83	68	2.5	8.1	3	59	73	▲ **1LE5504-2CC2** ■-■■■■	456	1.51
45	**280 S**	992	435		94.8	95.2	94.6	0.83	83	3.3	8	3.5	57	71	**1LE5504-2DC0** ■-■■■■	550	1.88
55	**280 M**	991	530	IE3	95.1	95.3	95	0.84	99	3.5	8.5	3.1	60	75	**1LE5504-2DC2** ■-■■■■	538	2.09
75	**315 S**	992	720		95.4	95.6	95.2	0.84	135	2.7	8.2	3.5	63	77	**1LE5504-3AC0** ■-■■■■	830	3.18
90	**315 M**	992	870		95.6	95.9	95.7	0.85	160	2.8	8.2	3.5	62	76	**1LE5504-3AC2** ■-■■■■	900	3.77
110	**315 L**	992	1060		95.8	96.1	96	0.86	193	2.8	8.3	3.5	63	78	**1LE5504-3AC4** ■-■■■■	1020	4.49
132	**315 L**	992	1270		96	96.3	96.3	0.87	230	2.8	8.4	3.5	64	79	**1LE5504-3AC5** ■-■■■■	1130	5.32
160	**315 L**	993	1540		96.2	96.4	96.1	0.82	295	2.9	8	3.1	70	85	**1LE5504-3AC6** ■-■■■■	1260	5.67
200	**315 L**	992	1930		96.3	96.4	96.1	0.82	365	3	7.5	3.2	68	83	**1LE5504-3AC7** ■-■■■■	1410	6.28
250	**315 L**	992	2400		96.5	96.6	96.3	0.81	460	3.2	8.2	3.3	69	84	**1LE5504-3AC8** ■-■■■■	1700	8
8-pole: 750 rpm at 50 Hz																	
4	**160 M**	736	52		87.1	87.1	85.6	0.71	9.3	2.2	5.6	2.5			▲ **1LE5504-1DD2** ■-■■■■	128	0.126
5.5	**160 M**	736	71		88.3	88.6	87.9	0.72	12.5	2.2	5.6	2.5			▲ **1LE5504-1DD3** ■-■■■■	142	0.147
7.5	**160 L**	734	98	IE3	89.3	90	89.2	0.74	16.4	2.3	5.1	2.5	66	79	▲ **1LE5504-1DD4** ■-■■■■	166	0.179
11	**180 L**	734	143		90.4	91.2	90.8	0.74	23.5	2.1	5.7	2.5	65	78	▲ **1LE5504-1ED4** ■-■■■■	226	0.361
15	**200 L**	736	195		91.2	91.8	91.6	0.75	31.5	2.3	6.6	3	58	71	▲ **1LE5504-2AD5** ■-■■■■	278	0.64
18.5	**225 S**	738	240		91.7	92.2	91.7	0.76	38.5	2.6	7	3	57	71	▲ **1LE5504-2BD0** ■-■■■■	305	0.679
22	**225 M**	738	285		92.1	92.4	91.9	0.76	45.5	2.7	7	3.2	57	70	▲ **1LE5504-2BD2** ■-■■■■	321	0.776
30	**250 M**	739	390	IE3	92.7	93.2	92.9	0.77	61	2.3	6.8	2.5	58	72	▲ **1LE5504-2CD2** ■-■■■■	398	1.15
37	**280 S**	740	475		93.1	93.8	93.7	0.78	74	2.4	6.8	2.6	55	69	**1LE5504-2DD0** ■-■■■■	483	1.54
45	**280 M**	740	580	IE3	93.4	94.1	94.2	0.8	87	2.5	6.8	2.6	57	71	**1LE5504-2DD2** ■-■■■■	538	1.9
55	**315 S**	743	710		93.7	93.9	93.4	0.8	106	2.3	6.1	2.5	58	73	**1LE5504-3AD0** ■-■■■■	762	2.53
75	**315 M**	742	970		94.2	94.5	94.1	0.81	142	2.4	6.3	2.6	58	72	**1LE5504-3AD2** ■-■■■■	834	3.13
90	**315 L**	742	1160		94.4	94.7	94.4	0.82	168	2.5	6.1	2.5	58	73	**1LE5504-3AD4** ■-■■■■	943	3.73
110	**315 L**	742	1420		94.7	95.1	94.9	0.82	205	2.4	6.3	2.6	61	75	**1LE5504-3AD5** ■-■■■■	1030	4.44
132	**315 L**	741	1700		94.9	95.3	95.1	0.82	245	2.4	6.1	2.5	65	80	**1LE5504-3AD6** ■-■■■■	1110	5.09
160	**315 L**	741	2050		95.1	95.5	95.5	0.79	305	2.3	6.3	2.5	64	79	**1LE5504-3AD7** ■-■■■■	1420	6.78
200	**315 L**	742	2550		95.4	95.6	95.4	0.78	390	2.9	6.7	2.8	72	86	**1LE5504-3AD8** ■-■■■■	1660	8.5

Voltages [1]		Version						Order code
50 Hz 400 VΔ/690 VY	60 Hz [1] 460 VΔ	**Standard**	**3**	**4**				–
50 Hz 500 VΔ		Without additional charge	**4**	**0**				–
50 Hz 690 VΔ		With additional charge	**4**	**7**				–
For other voltages [1] and more information, see from page 4/27			■	■				**...**
Types of construction		Version						Order code
Without flange	IM B3	**Standard**			**A**			–
With flange	IM B5	With additional charge			**F**			–
For other types of construction and more information, see from page 4/31					■			**...**
Motor protection		Version						Order code
Without		**Standard**				**A**		–
PTC thermistor with 3 temperature sensors		With additional charge				**B**		–
For other motor protection and more information, see from page 4/34						■		**...**
Terminal box position		Version						Order code
Terminal box base right with terminal box 45° [2] [3]		**Standard**					**3**	–
Terminal box top [2] [4]		**Standard**					**4**	–
For other terminal box positions and more information, see from page 4/35							■	**...**
Special versions								Order code(s)
Forced-air cooled motors w/o ext. fan/fan cover (IC418)		**1LE5504-....** ■-■■■■ -Z						**F90+...+...+...**
For options, see from page 4/36		**1LE5504-....** ■-■■■■ -Z						**...+...+...+...**

Note:
Further IE4 motors are available as standard Innomotics SD (1LE15) motors, see page 3/9 and 3/10.

For legends and foot notes, see page 4/14.

© Innomotics 2024

Cast-iron series Innomotics SD 1LE5504 Basic Line with increased power – self-ventilated or forced-air cooled

Selection and ordering data

P_{rated}, 50 Hz/ P50 kW	Frame size FS	Operating values at rated power n_{rated}, 50 Hz rpm	T_{rated}, 50 Hz Nm	Different IE class 60 Hz/P60	η_{rated}, 50 Hz, 4/4 %	η_{rated}, 50 Hz, 3/4 %	η_{rated}, 50 Hz, 2/4 %	$\cos\varphi_{rated}$, 50 Hz, 4/4	I_{rated}, 50 Hz, 400 V A	T_{LR}/T_{rated}, 50 Hz	I_{LR}/I_{rated}, 50 Hz	T_B/T_{rated}, 50 Hz	L_{pfA}, 50 Hz dB(A)	L_{WA}, 50 Hz dB(A)	Cast-iron series 1LE5504 Basic Line Article No. ▲ New	$m_{IM\ B3}$ kg	J kgm²
_ Cooling: Self-ventilated (IC411)																	
_ Efficiency according to IEC 60034-30-1: IE4 Super Premium Efficiency																	
_ Insulation: Thermal class 155 (temperature class F), IP55 degree of protection, utilization in accordance with thermal class 130 (temperature class B)																	
2-pole: 3000 rpm at 50 Hz																	
75	**250 M**	2982	240		95.6	95.8	95.5	0.9	N/A	2.8	9	3.4	74	88	▲ **1LE5504-2CA6** ■-■■■■	463	0.811
110	**280 M**	2980	350		96	96.3	96.1	0.9	N/A	2.8	9.1	3.5	77	91	**1LE5504-2DA6** ■-■■■■	680	1.07
4-pole: 1500 rpm at 50 Hz																	
75	**250M**	1488	480		96	96.3	96.1	0.85	N/A	2.8	8.7	3.2	65	79	▲ **1LE5504-2CB6** ■-■■■■	583	1.72
110	**280 M**	1490	700		96.3	96.6	96.5	0.88	N/A	2.9	9.5	3.5	69	84	**1LE5504-2DB6** ■-■■■■	808	2.55
6-pole: 1000 rpm at 50 Hz																	
45	**250 M**	990	435	IE3	94.8	95.1	94.9	0.83	N/A	2.9	8.8	3.5	62	76	▲ **1LE5504-2CC6** ■-■■■■	507	1.8
75	**280 M**	991	720	IE3	95.4	95.7	95.4	0.85	N/A	3.6	9	3.7	60	74	**1LE5504-2DC6** ■-■■■■	666	2.63
8-pole: 750 rpm at 50 Hz																	
37	**250 M**	738	480	IE3	93.1	93.7	93.5	0.79	N/A	2.6	6.5	2.9	58	73	▲ **1LE5504-2CD6** ■-■■■■	447	1.44
55	**280 M**	740	710		93.7	94.2	94	0.78	N/A	3	7.2	3	58	72	**1LE5504-2DD6** ■-■■■■	567	2.08

Voltages [1]		Version						Order code
50 Hz 400 VΔ/690 VY	60 Hz [1] 460 VΔ	**Standard**	**3**	**4**				–
50 Hz 500 VΔ		Without additional charge	**4**	**0**				–
50 Hz 690 VΔ		With additional charge	**4**	**7**				–
For other voltages [1] and more information, see from page 4/27			■	■				**...**
Types of construction		Version						Order code
Without flange	IM B3	**Standard**			**A**			–
With flange	IM B5	With additional charge			**F**			–
For other types of construction and more information, see from page 4/31					■			**...**
Motor protection		Version						Order code
Without		**Standard**				**A**		–
PTC thermistor with 3 temperature sensors		With additional charge				**B**		–
For other motor protection and more information, see from page 4/34						■		**...**
Terminal box position		Version						Order code
Terminal box base right with terminal box 45° [2] [3]		**Standard**					**3**	–
Terminal box top [2] [4]		**Standard**					**4**	–
For other terminal box positions and more information, see from page 4/35							■	**...**
Special versions								Order code(s)
Forced-air cooled motors w/o ext. fan/fan cover (IC418)		**1LE5504-....**	■-■■■■				-Z	**F90+...+...+...**
For options, see from page 4/36		**1LE5504-....**	■-■■■■				-Z	**...+...+...+...**

Note:
Further IE4 motors are available as standard Innomotics SD (1LE15) motors, see page 3/9 and 3/10.

[1] Parallel supply lines are required, except in the case of connection to 690 V.
[2] For a power rating of 315 kW, 2-pole, 60 Hz and 315 kW, 4-pole, 50 Hz, a larger terminal box can be used (order code **R50**) due to the magnitude of the current.
Order code **R50** alters the motor dimensions.
[3] Only for frame size 315 if 11th position of Article No. for 2-, 4-pole motors **6**, **7**, for 6-, 8-pole motors **7**, **8** and for frame size 355 to 450.
[4] Only for frame size 280 (all motor types).
Only for frame size 315 if 11th position of Article No. for all poles **0**, **2**, **4**, **5**; for 6-, 8-pole motors **6**.

© Innomotics 2024

Selection and ordering data

P_{rated}, 50 Hz/ P50 kW	Frame size FS	Operating values at rated power n_{rated}, 50 Hz rpm	T_{rated}, 50 Hz Nm	Different IE class 60 Hz/P60	η_{rated}, 50 Hz, 4/4 %	η_{rated}, 50 Hz, 3/4 %	η_{rated}, 50 Hz, 2/4 %	$\cos\varphi_{rated}$, 50 Hz, 4/4	I_{rated}, 50 Hz, 400 V A	T_{LR}/T_{rated}, 50 Hz	I_{LR}/I_{rated}, 50 Hz	T_B/T_{rated}, 50 Hz	L_{pfA}, 50 Hz dB(A)	L_{WA}, 50 Hz dB(A)	Cast-iron series 1LE5604 Performance Line Article No.	$m_{IM\ B3}$ kg	J kgm²
_ Cooling: Self-ventilated (IC411)																	
_ Efficiency according to IEC 60034-30-1: IE4 Super Premium Efficiency																	
_ Insulation: Thermal class 155 (temperature class F), IP55 degree of protection, utilization in accordance with thermal class 130 (temperature class B)																	
2-pole: 3000 rpm at 50 Hz																	
250	**315 L**	2986	800		96.5	96.4	95.7	0.88	425	3	9.3	4.2	80	94	**1LE5604-3AA6** ■-■■■■	1340	2.82
315	**315 L**	2986	1010		96.5	96.3	95.5	0.87	540	3.5	9.9	4.2	81	96	**1LE5604-3AA7** ■-■■■■	1520	3.27
355	**355 L**	2988	1130		96.5	96.3	95.5	0.89	600	2.6	8.9	4	84	99	**1LE5604-3BA3** ■-■■■■	2100	4.74
400	**355 L**	2986	1280		96.5	96.4	95.9	0.92	650	2.6	8.5	3.4	83	98	**1LE5604-3BA4** ■-■■■■	2240	5.36
500	**355 L**	2988	1600		96.5	96.4	95.8	0.89	840	3	8.9	3.8	84	98	**1LE5604-3BA5** ■-■■■■	2340	5.76
4-pole: 1500 rpm at 50 Hz																	
250	**315 L**	1490	1600	IE3	96.7	96.8	96.5	0.86	435	2.8	7.9	3.2	75	90	**1LE5604-3AB6** ■-■■■■	1500	4.98
315	**315 L**	1490	2000	IE3	96.7	96.7	96.3	0.83	570	3.2	8.5	3.5	75	90	**1LE5604-3AB7** ■-■■■■	1560	5.39
355	**355 L**	1492	2250	IE3	96.7	96.7	96.2	0.83	640	2.8	7.9	2.8	81	96	**1LE5604-3BB3** ■-■■■■	2050	6.76
400	**355 L**	1492	2550	IE3	96.7	96.7	96.2	0.82	730	3.2	7.9	2.9	81	96	**1LE5604-3BB4** ■-■■■■	2080	7.16
500	**355 L**	1491	3200		96.7	96.8	96.6	0.86	870	3.1	8.1	3.3	80	96	**1LE5604-3BB5** ■-■■■■	2290	8.36
6-pole: 1000 rpm at 50 Hz																	
200	**315 L**	992	1930		96.3	96.4	96.1	0.82	365	3	7.5	3.2	68	83	**1LE5604-3AC7** ■-■■■■	1410	6.28
250	**315 L**	992	2400		96.5	96.6	96.3	0.81	460	3.2	8.2	3.3	69	84	**1LE5604-3AC8** ■-■■■■	1700	8
315	**355 L**	993	3050		96.6	96.8	96.5	0.84	560	2.8	7.8	3.2	73	89	**1LE5604-3BC2** ■-■■■■	2110	12.3
355	**355 L**	993	3400		96.6	96.7	96.3	0.83	640	2.9	8.4	3.3	74	89	**1LE5604-3BC3** ■-■■■■	2250	13.7
400	**355 L**	993	3850		96.6	96.7	96.5	0.84	710	2.8	8.1	3	75	90	**1LE5604-3BC4** ■-■■■■	2240	13.4
8-pole: 750 rpm at 50 Hz																	
160	**315 L**	741	2050		95.1	95.5	95.5	0.79	305	2.3	6.3	2.5	64	79	**1LE5604-3AD7** ■-■■■■	1420	6.78
200	**315 L**	742	2550		95.4	95.6	95.4	0.78	390	2.9	6.7	2.8	72	86	**1LE5604-3AD8** ■-■■■■	1660	8.5
250	**355 L**	744	3200		95.4	95.8	95.8	0.8	475	2.4	7.1	2.7	73	88	**1LE5604-3BD1** ■-■■■■	2280	13.3
315	**355 L**	744	4050		95.4	95.7	95.4	0.8	600	2.5	7.3	3	73	88	**1LE5604-3BD2** ■-■■■■	2310	14

Voltages [1]		Version						Order code
50 Hz 400 VΔ/690 VY	60 Hz [1] 460 VΔ	**Standard**	**3**	**4**				–
50 Hz 500 VΔ		Without additional charge	**4**	**0**				–
50 Hz 690 VΔ		With additional charge	**4**	**7**				–
For other voltages [1] and more information, see from page 4/27			■	■				**...**
Types of construction		Version						Order code
Without flange	IM B3	**Standard**			**A**			–
With flange	IM B5	With additional charge			**F**			–
For other types of construction and more information, see from page 4/31					■			**...**
Motor protection		Version						Order code
PTC thermistor with 3 temperature sensors		Standard				**B**		–
For other motor protection and more information, see from page 4/34						■		**...**
Terminal box position		Version						Order code
Terminal box base right with terminal box 45° [2] [3]		**Standard**					**3**	–
Terminal box top [2] [4]		**Standard**					**4**	–
For other terminal box positions and more information, see from page 4/35							■	**...**
Special versions								Order code(s)
Forced-air cooled motors w/o ext. fan/fan cover (IC418)		**1LE5604-....** ■-■■■■ -Z						**F90+...+...+...**
For options, see from page 4/36		**1LE5604-....** ■-■■■■ -Z						**...+...+...+...**

Note:
Further IE4 motors are available as standard Innomotics SD (1LE15) motors, see page 3/9 and 3/10.

[1] Parallel supply lines are required, except in the case of connection to 690 V.
[2] For a power rating of 315 kW, 2-pole, 60 Hz and 315 kW, 4-pole, 50 Hz, a larger terminal box can be used (order code **R50**) due to the magnitude of the current.
Order code **R50** alters the motor dimensions.
[3] Only for frame size 315 if 11th position of Article No. for 2-, 4-pole motors **6**, **7**, for 6-, 8-pole motors **7**, **8** and for frame size 355 to 450.
[4] Only for frame size 315 if 11th position of Article No. for all poles **0**, **2**, **4**, **5**; for 6-, 8-pole motors **6**.

© Innomotics 2024

Selection and ordering data

P_{rated}, 50 Hz/ P50 kW	Frame size FS	Operating values at rated power n_{rated}, 50 Hz rpm	T_{rated}, 50 Hz Nm	Different IE class 60 Hz/P60	η_{rated}, 50 Hz, 4/4 %	η_{rated}, 50 Hz, 3/4 %	η_{rated}, 50 Hz, 2/4 %	$\cos\varphi_{rated}$, 50 Hz, 4/4	I_{rated}, 50 Hz, 400 V A	T_{LR}/T_{rated}, 50 Hz	I_{LR}/I_{rated}, 50 Hz	T_B/T_{rated}, 50 Hz	L_{pfA}, 50 Hz dB(A)	L_{WA}, 50 Hz dB(A)	Cast-iron series 1LE5534 Basic Line Article No.	$m_{IM\ B3}$ kg	J kgm²
_ Cooling: Self-ventilated (IC411)																	
_ Efficiency according to IEC 60034-30-1: IE4 Super Premium Efficiency																	
_ Insulation: Thermal class 155 (temperature class F), IP55 degree of protection, utilization in accordance with thermal class 130 (temperature class B)																	
2-pole: 3000 rpm at 50 Hz																	
110	**315 S**	2982	350		96	95.9	95.2	0.91	182	2.1	6.5	2.7	74	89	**1LE5534-3AA0** ■-■■■■	898	1.67
132	**315 M**	2984	420		96.2	96.1	95.5	0.91	220	2.4	7.2	3	75	89	**1LE5534-3AA2** ■-■■■■	1010	1.97
160	**315 L**	2982	510		96.3	96.3	95.7	0.92	260	2.4	7.1	2.8	75	90	**1LE5534-3AA4** ■-■■■■	1090	2.25
200	**315 L**	2980	640		96.5	96.7	96.5	0.92	325	2.3	6.6	2.7	74	88	**1LE5534-3AA5** ■-■■■■	1280	2.65
250	**315 L**	2982	800		96.5	96.6	96.4	0.91	410	2.6	7.5	3	80	95	**1LE5534-3AA6** ■-■■■■	1340	2.82
315	**315 L**	2980	1010		96.5	96.7	96.5	0.91	520	2.4	7.5	2.9	81	96	**1LE5534-3AA7** ■-■■■■	1490	3.11
560 [1) 2)]	**400**	2988	1790		97	96.9	96.5	0.9	740	1.7	7.4	3.2	74	90	**1LE5534-4AA3** ■-■■■■	2900	8.9
630 [1) 2)]	**400**	2986	2000		96.9	97.1	96.8	0.9	830	1.4	6.9	2.8	74	90	**1LE5534-4AA5** ■-■■■■	3000	9.8
710 [3)]	**400**	2990	2250		97.2	97.3	96.9	0.89	950	2	7.8	3.1	74	90	**1LE5534-4AA7** ■-■■■■	3200	10.8
800 [1) 2) 3) 4)]	**450**	2991	2550		97.5	97.4	97.1	0.87	1090	1.6	8	4	75	91	**1LE5534-4BA3** ■-■■■■	4000	12.3
900 [1) 2) 3) 4)]	**450**	2988	2900		97.5	97.6	97.4	0.88	1210	1.9	7.8	3.8	75	91	**1LE5534-4BA5** ■-■■■■	4300	13.5
1000 [1) 2) 3) 4)]	**450**	2988	3200		97.5	97.7	97.6	0.89	1330	1.7	6.8	3.3	75	91	**1LE5534-4BA7** ■-■■■■	4500	14.7
4-pole: 1500 rpm at 50 Hz																	
110	**315 S**	1490	700		96.3	96.5	96.2	0.85	194	2.2	6.9	2.7	68	83	**1LE5534-3AB0** ■-■■■■	920	2.64
132	**315 M**	1490	850		96.4	96.6	96.5	0.86	230	2.2	6.9	2.6	67	81	**1LE5534-3AB2** ■-■■■■	1080	3.38
160	**315 L**	1490	1030		96.6	96.8	96.7	0.86	280	2.3	7.2	2.7	70	85	**1LE5534-3AB4** ■-■■■■	1240	3.91
200	**315 L**	1490	1280		96.7	97	97	0.87	345	2.6	7	2.5	74	88	**1LE5534-3AB5** ■-■■■■	1350	4.62
250	**315 L**	1488	1600		96.7	97	97	0.86	435	2.3	6.5	2.6	75	90	**1LE5534-3AB6** ■-■■■■	1520	5.09
315	**315 L**	1488	2000		96.7	96.9	96.8	0.85	550	2.2	7.2	2.8	75	90	**1LE5534-3AB7** ■-■■■■	1530	5.28
560 [1) 2)]	**400**	1492	3600		96.8	97	96.7	0.87	770	2	6.8	2.8	72	88	**1LE5534-4AB3** ■-■■■■	3100	14.9
630 [1) 2)]	**400**	1492	4050		96.9	97	96.6	0.87	860	2.2	7.3	3	74	90	**1LE5534-4AB5** ■-■■■■	3200	15.6
710 [3)]	**400**	1491	4550		96.9	97	96.9	0.88	960	2	6.4	2.6	74	90	**1LE5534-4AB7** ■-■■■■	3300	16.9
800 [3)]	**450**	1492	5100		96.9	97.1	96.9	0.87	1100	1.5	6.5	2.4	79	95	**1LE5534-4BB3** ■-■■■■	4000	24
900 [3)]	**450**	1493	5800		97.1	97.2	96.9	0.87	1230	1.7	7.2	2.7	79	95	**1LE5534-4BB5** ■-■■■■	4200	25.4
1000 [1) 3)]	**450**	1492	6400		97.1	97.2	97.1	0.88	1350	1.8	6.8	2.5	79	95	**1LE5534-4BB7** ■-■■■■	4400	28

Voltages [6)]		Version							Order code
50 Hz 400 VΔ/690 VY	60 Hz [6)] 460 VΔ	**Standard**	**3**	**4**					–
50 Hz 500 VΔ	60 Hz 575 VΔ	Without additional charge	**4**	**0**					–
50 Hz 690 VΔ		With additional charge	**4**	**7**					–
For other voltages [5)] and more information, see from page 4/27			■	■					**...**
Types of construction		Version							Order code
Without flange	IM B3	**Standard**			**A**				–
With flange	IM B5	With additional charge			**F**				–
For other types of construction and more information, see from page 4/31					■				**...**
Motor protection		Version							Order code
Without		**Standard**				**A**			–
PTC thermistor with 3 temperature sensors		With additional charge				**B**			–
For other motor protection and more information, see from page 4/34						■			**...**
Terminal box position		Version							Order code
Terminal box base right with terminal box 45° [3) 7)]		**Standard**					**3**		–
Terminal box top [4) 7)]		**Standard**					**4**		–
For other terminal box positions and more information, see from page 4/35							■		**...**
Special versions									Order code(s)
Forced-air cooled motors w/o ext. fan/fan cover (IC418)		**1LE5534-....**	■-	■■■■				-Z	**F90+...+...+...**
For options and information, see from page 4/36		**1LE5534-....**	■-	■■■■				-Z	**...+...+...+...**

For legends and foot notes, see page 4/17.

© Innomotics 2024

Selection and ordering data

P_{rated}, 50 Hz/ P50 kW	Frame size FS	Operating values at rated power n_{rated}, 50 Hz rpm	T_{rated}, 50 Hz Nm	Different IE class 60 Hz/P60	η_{rated}, 50 Hz, 4/4 %	η_{rated}, 50 Hz, 3/4 %	η_{rated}, 50 Hz, 2/4 %	$\cos\varphi_{rated}$, 50 Hz, 4/4	I_{rated}, 50 Hz, 400 V A	T_{LR}/T_{rated}, 50 Hz	I_{LR}/I_{rated}, 50 Hz	T_B/T_{rated}, 50 Hz	L_{pfA}, 50 Hz dB(A)	L_{WA}, 50 Hz dB(A)	Cast-iron series 1LE5534 Basic Line Article No.	$m_{IM\ B3}$ kg	J kgm²
_ Cooling: Self-ventilated (IC411)																	
_ Efficiency according to IEC 60034-30-1: IE4 Super Premium Efficiency																	
_ Insulation: Thermal class 155 (temperature class F), IP55 degree of protection, utilization in accordance with thermal class 130 (temperature class B)																	
6-pole: 1000 rpm at 50 Hz																	
75	**315 S**	993	720		95.4	95.5	95.1	0.82	138	2.3	7	2.8	63	77	**1LE5534-3AC0** ■-■■■■	831	3.02
90	**315 M**	993	870		95.6	95.7	95.2	0.83	164	2.4	7	2.8	62	77	**1LE5534-3AC2** ■-■■■■	903	3.57
110	**315 L**	992	1060		95.8	96	95.8	0.83	200	2.4	7	2.8	65	79	**1LE5534-3AC4** ■-■■■■	1020	4.25
132	**315 L**	993	1270		96	96.1	95.6	0.83	240	2.7	7.6	3	64	79	**1LE5534-3AC5** ■-■■■■	1100	4.86
160	**315 L**	992	1540		96.2	96.4	96.2	0.82	295	2.5	7.1	3	66	81	**1LE5534-3AC6** ■-■■■■	1260	5.73
200	**315 L**	992	1930		96.3	96.5	96.3	0.81	370	2.8	7	3	68	83	**1LE5534-3AC7** ■-■■■■	1410	6.39
250	**315 L**	992	2400		96.5	96.6	96.3	0.81	460	2.9	7.3	3	68	83	**1LE5534-3AC8** ■-■■■■	1640	8.1
450	**400**	994	4300		96.6	96.8	96.5	0.84	640	2.2	6.9	3	70	86	**1LE5534-4AC3** ■-■■■■	3100	25.5
500 [1]	**400**	994	4800		96.7	96.8	96.5	0.83	720	2.3	7.4	3.2	70	86	**1LE5534-4AC5** ■-■■■■	3300	27.4
560	**400**	994	5400		96.6	96.8	96.4	0.83	810	2.5	7.2	3.4	70	86	**1LE5534-4AC7** ■-■■■■	3300	28.6
630 [1) 2)]	**450**	995	6000		96.7	97	96.7	0.84	900	2	6.7	2.7	72	88	**1LE5534-4BC3** ■-■■■■	4100	38.6
710 [3)]	**450**	994	6800		96.8	97	96.9	0.84	1010	1.7	6.4	2.4	72	88	**1LE5534-4BC5** ■-■■■■	4200	41
800 [1) 3)]	**450**	994	7700		96.8	97	96.8	0.84	1140	1.9	6.8	2.5	74	90	**1LE5534-4BC7** ■-■■■■	4300	43.3
8-pole: 750 rpm at 50 Hz																	
55	**315 S**	743	710		93.7	93.9	93.4	0.8	106	2.3	6.1	2.5	58	73	**1LE5534-3AD0** ■-■■■■	762	2.53
75	**315 M**	742	970		94.2	94.5	94.1	0.81	142	2.4	6.3	2.6	58	72	**1LE5534-3AD2** ■-■■■■	834	3.13
90	**315 L**	742	1160		94.4	94.7	94.4	0.82	168	2.5	6.1	2.5	58	73	**1LE5534-3AD4** ■-■■■■	943	3.73
110	**315 L**	742	1420		94.7	95.1	94.9	0.82	205	2.4	6.3	2.6	61	75	**1LE5534-3AD5** ■-■■■■	1030	4.44
132	**315 L**	741	1700		94.9	95.3	95.1	0.82	245	2.4	6.1	2.5	65	80	**1LE5534-3AD6** ■-■■■■	1110	5.09
160	**315 L**	741	2050		95.1	95.5	95.5	0.79	305	2.4	6.2	2.4	67	82	**1LE5534-3AD7** ■-■■■■	1420	6.78
200	**315 L**	742	2550		95.4	95.6	95.4	0.78	390	2.9	6.7	2.8	72	86	**1LE5534-3AD8** ■-■■■■	1660	8.5
355	**400**	744	4550		95.8	96.1	95.8	0.8	530	2	6.5	2.6	64	80	**1LE5534-4AD3** ■-■■■■	2900	21.9
400	**400**	744	5100		96	96.2	96	0.81	590	2	6.5	2.5	64	80	**1LE5534-4AD5** ■-■■■■	3100	24.5
450	**400**	744	5800		95.9	96.2	95.9	0.8	680	2.4	7	2.8	64	80	**1LE5534-4AD7** ■-■■■■	3300	27.5
500 [5)]	**450**	744	6400		96.1	96.4	96.2	0.8	750	2	6.5	2.4	67	83	**1LE5534-4BD3** ■-■■■■	3800	34
560 [5)]	**450**	745	7200		96.3	96.5	96.2	0.8	840	1.9	6.7	2.5	67	83	**1LE5534-4BD5** ■-■■■■	4000	38
630 [1) 5)]	**450**	745	8100		96.4	96.6	96.3	0.79	960	1.9	7	2.5	67	83	**1LE5534-4BD7** ■-■■■■	4300	42.5

Voltages [6)]		Version							Order code
50 Hz 400 VΔ/690 VY	60 Hz [6)] 460 VΔ	**Standard**	**3**	**4**					–
50 Hz 500 VΔ	60 Hz 575 VΔ	Without additional charge	**4**	**0**					–
50 Hz 690 VΔ		With additional charge	**4**	**7**					–
For other voltages [6)] and more information, see from page 4/27			■	■					**...**
Types of construction		Version							Order code
Without flange	IM B3	**Standard**			**A**				–
With flange	IM B5	With additional charge			**F**				–
For other types of construction and more information, see from page 4/31					■				**...**
Motor protection		Version							Order code
Without		**Standard**				**A**			–
PTC thermistor with 3 temperature sensors		With additional charge				**B**			–
For other motor protection and more information, see from page 4/34						■			**...**
Terminal box position		Version							Order code
Terminal box base right with terminal box 45° [7) 8)]		**Standard**					**3**		–
Terminal box top [7) 9)]		**Standard**					**4**		–
For other terminal box positions and more information, see from page 4/35							■		**...**
Special versions									Order code(s)
Forced-air cooled motors w/o ext. fan/fan cover (IC418)		**1LE5534-....**	■	-■■■■				-Z	**F90+...+...+...**
For options and information, see from page 4/36		**1LE5534-....**	■	-■■■■				-Z	**...+...+...+...**

1) Terminal box 1XB1631.
2) Terminal box position NDE can only be ordered using order code **H09** (2 × terminal box TB3R61). Order code **H08** not available.
3) The standard version is 50 Hz 690 VΔ (voltage code **4-7**) or 60 Hz 575 VΔ (voltage code **4-0**).
4) In the series version, the maximum speed is n_{max} = 3000 rpm. Operation up to 3600 rpm at higher speeds on request for an additional charge.
5) Utilization with sinusoidal supply in accordance with thermal class 155 (temperature class F).
6) For frame size 315, parallel supply lines are required, except in the case of connection to 690 V.
7) For frame size 315 with power rating 315 kW, 2-pole, 60 Hz and 315 kW, 4-pole, 50 Hz, a larger terminal box can be used (order code **R50**) due to the magnitude of the current. Order code **R50** alters the motor dimensions.
8) Only for frame size 315 if 11th position of Article No. for 2-, 4-pole motors **6**, **7**, for 6-, 8-pole motors **7**, **8** and for frame size 355 to 450.
9) Only for frame size 315 if 11th position of Article No. for all poles **0**, **2**, **4**, **5**; for 6-, 8-pole motors **6**.

© Innomotics 2024

Selection and ordering data

P_{rated}, 50 Hz/ P50 kW	Frame size FS	Operating values at rated power n_{rated}, 50 Hz rpm	T_{rated}, 50 Hz Nm	Different IE class 60 Hz/P60	η_{rated}, 50 Hz, 4/4 %	η_{rated}, 50 Hz, 3/4 %	η_{rated}, 50 Hz, 2/4 %	$\cos\varphi_{rated}$, 50Hz, 4/4	I_{rated}, 50 Hz, 400 V A	T_{LR}/T_{rated}, 50 Hz	I_{LR}/I_{rated}, 50 Hz	T_B/T_{rated}, 50 Hz	L_{pfA}, 50 Hz dB(A)	L_{WA}, 50 Hz dB(A)	Cast-iron series 1LE5634 Performance Line Article No.	$m_{IM\ B3}$ kg	J kgm²
_ Cooling: Self-ventilated (IC411)																	
_ Efficiency according to IEC 60034-30-1: IE4 Super Premium Efficiency																	
_ Insulation: Thermal class 155 (temperature class F), IP55 degree of protection, utilization in accordance with thermal class 130 (temperature class B)																	
2-pole: 3000 rpm at 50 Hz																	
250	**315 L**	2982	800		96.5	96.6	96.4	0.91	410	2.6	7.5	3	80	95	**1LE5634-3AA6** ■-■■■■	1340	2.82
315	**315 L**	2980	1010		96.5	96.7	96.5	0.91	520	2.4	7.5	2.9	81	96	**1LE5634-3AA7** ■-■■■■	1490	3.11
355	**355 L**	2984	1140		96.5	96.4	95.9	0.9	590	2.3	8.4	3.1	83	98	**1LE5634-3BA3** ■-■■■■	2170	5.09
400	**355 L**	2986	1280		96.5	96.5	96	0.91	660	2.3	7.7	3.1	83	98	**1LE5634-3BA4** ■-■■■■	2240	5.46
500	**355 L**	2988	1600		96.5	96.4	95.8	0.89	840	2.8	8.5	3.7	83	98	**1LE5634-3BA5** ■-■■■■	2340	5.76
4-pole: 1500 rpm at 50 Hz																	
250	**315 L**	1488	1600	IE3	96.7	97	97	0.86	435	2.3	6.5	2.6	75	90	**1LE5634-3AB6** ■-■■■■	1520	5.09
315	**315 L**	1488	2000		96.7	96.9	96.8	0.85	550	2.2	7.2	2.8	75	90	**1LE5634-3AB7** ■-■■■■	1530	5.28
355	**355 L**	1491	2250	IE3	96.7	96.8	96.5	0.85	620	2.2	7.5	3.2	78	93	**1LE5634-3BB3** ■-■■■■	1960	6.26
400	**355 L**	1491	2550		96.7	96.9	96.6	0.85	700	2.3	7.3	3.2	79	95	**1LE5634-3BB4** ■-■■■■	2080	7.06
500	**355 L**	1491	3200		96.7	96.8	96.6	0.86	870	3.1	7.9	3.3	80	96	**1LE5634-3BB5** ■-■■■■	2290	8.36
6-pole: 1000 rpm at 50 Hz																	
200	**315 L**	992	1930		96.3	96.5	96.3	0.81	370	2.8	7	3	68	83	**1LE5634-3AC7** ■-■■■■	1410	6.39
250	**315 L**	992	2400		96.5	96.6	96.3	0.81	460	2.9	7.3	3	68	83	**1LE5634-3AC8** ■-■■■■	1640	8.1
315	**355 L**	992	3050		96.6	96.9	96.9	0.86	550	2.4	6.8	2.8	75	90	**1LE5634-3BC2** ■-■■■■	2150	12.9
355	**355 L**	993	3400		96.6	96.7	96.4	0.84	630	2.6	7.4	3.2	76	91	**1LE5634-3BC3** ■-■■■■	2250	13.8
400	**355 L**	994	3850		96.6	96.7	96.5	0.84	710	2.7	7.7	2.9	75	90	**1LE5634-3BC4** ■-■■■■	2240	13.4
8-pole: 750 rpm at 50 Hz																	
160	**315 L**	741	2050		95.1	95.5	95.5	0.79	305	2.2	6.2	2.4	64	79	**1LE5634-3AD7** ■-■■■■	1420	6.78
200	**315 L**	742	2550		95.4	95.6	95.4	0.78	390	2.9	6.7	2.8	72	86	**1LE5634-3AD8** ■-■■■■	1660	8.5
250	**355 L**	744	3200		95.4	95.8	95.8	0.8	475	2.4	7.1	2.7	73	88	**1LE5634-3BD1** ■-■■■■	2280	13.3
315	**355 L**	744	4050		95.4	95.7	95.4	0.8	600	2.4	7	2.9	73	88	**1LE5634-3BD2** ■-■■■■	2310	14

Voltages [1]		Version						Order code
50 Hz 400 VΔ/690 VY	60 Hz [1] 460 VΔ	**Standard**	**3**	**4**				–
50 Hz 500 VΔ		Without additional charge	**4**	**0**				–
50 Hz 690 VΔ		With additional charge	**4**	**7**				–
For other voltages [1] and more information, see from page 4/27			■	■				**...**
Types of construction		Version						Order code
Without flange	IM B3	**Standard**			**A**			–
With flange	IM B5	With additional charge			**F**			–
For other types of construction and more information, see from page 4/31					■			**...**
Motor protection		Version						Order code
PTC thermistor with 3 temperature sensors		**Standard**				**B**		–
For other motor protection and more information, see from page 4/34						■		**...**
Terminal box position		Version						Order code
Terminal box base left with terminal box 45° [2]		Without additional charge					**2**	–
Terminal box base right with terminal box 45° [2]		**Standard**					**3**	–
For other terminal box positions and more information, see from page 4/35							■	**...**
Special versions								Order code(s)
Forced-air cooled motors w/o ext. fan/fan cover (IC418)		**1LE5634-....** ■-■■■■ -Z						**F90+...+...+...**
For options and information, see from page 4/36		**1LE5634-....** ■-■■■■ -Z						**...+...+...+...**

[1] Parallel supply lines are required, except in the case of connection to 690 V.
[2] For a power rating of 315 kW, 2-pole, 60 Hz and 315 kW, 4-pole, 50 Hz, a larger terminal box can be used (order code **R50**) due to the magnitude of the current. Order code **R50** alters the motor dimensions.

© Innomotics 2024

Selection and ordering data

P_{rated}, 50 Hz/ P50 kW	Frame size FS	Operating values at rated power n_{rated}, 50 Hz rpm	T_{rated}, 50 Hz Nm	Different IE class 60 Hz/P60	η_{rated}, 50 Hz, 4/4 %	η_{rated}, 50 Hz, 3/4 %	η_{rated}, 50 Hz, 2/4 %	$\cos\varphi_{rated}$, 50Hz, 4/4	I_{rated}, 50 Hz, 400 V A	T_{LR}/T_{rated}, 50 Hz	I_{LR}/I_{rated}, 50 Hz	T_B/T_{rated}, 50 Hz	L_{pfA}, 50 Hz dB(A)	L_{WA}, 50 Hz dB(A)	Cast-iron series 1LE5584 Basic Line Article No.	$m_{IM\ B3}$ kg	J kgm²
_ Cooling: Self-ventilated (IC411)																	
_ Efficiency according to IEC 60034-30-1: IE4 Super Premium Efficiency																	
_ Insulation: Thermal class 155 (temperature class F), IP55 degree of protection, with sinusoidal supply or converter operation, utilization in accordance with thermal class 130 (temperature class B)																	
_ Optional and suitable for converter operation; U_{line} ≤ 690 V - IVIC-C premiuminsulation system																	
2-pole: 3000 rpm at 50 Hz																	
75	**280 S**	2982	240		95.6	95.6	95.1	0.9	126	3.2	9.2	3.7	75	90	▲ **1LE5584-2DA0** ■-■■■■	549	0.797
90	**280 M**	2982	290		95.8	95.9	95.5	0.9	151	3.1	9.5	3.9	73	87	▲ **1LE5584-2DA2** ■-■■■■	593	0.895
110	**315 S**	2984	350		96	95.8	95	0.9	184	2.3	7.8	3.1	74	88	▲ **1LE5584-3AA0** ■-■■■■	894	1.67
132	**315 M**	2986	420		96.2	96.1	95.4	0.91	220	2.8	8.9	3.5	74	89	▲ **1LE5584-3AA2** ■-■■■■	1020	2.09
160	**315 L**	2982	510		96.3	96.4	96.1	0.92	260	2.3	7.1	2.9	75	89	▲ **1LE5584-3AA4** ■-■■■■	1060	2.25
200	**315 L**	2984	640		96.5	96.6	96.3	0.91	330	2.9	8.5	3.4	73	87	▲ **1LE5584-3AA5** ■-■■■■	1300	2.75
4-pole: 1500 rpm at 50 Hz																	
75	**280 S**	1490	480	IE3	96	96.3	96.1	0.88	128	2.7	8.5	3.2	70	85	▲ **1LE5584-2DB0** ■-■■■■	688	2.03
90	**280 M**	1490	580	IE3	96.1	96.4	96.3	0.89	152	2.8	8.5	3.2	73	88	▲ **1LE5584-2DB2** ■-■■■■	792	2.44
110	**315 S**	1492	700		96.3	96.4	96	0.84	196	2.6	8.2	3.2	66	81	▲ **1LE5584-3AB0** ■-■■■■	945	2.8
132	**315 M**	1492	840		96.4	96.5	96.3	0.85	235	2.6	7.9	3	69	83	▲ **1LE5584-3AB2** ■-■■■■	1080	3.38
160	**315 L**	1492	1020		96.6	96.7	96.4	0.85	280	2.8	8.3	3.2	69	84	▲ **1LE5584-3AB4** ■-■■■■	1230	3.9
200	**315 L**	1492	1280		96.7	96.8	96.5	0.84	355	3.7	8.7	3.3	69	84	▲ **1LE5584-3AB5** ■-■■■■	1350	4.62
6-pole: 1000 rpm at 50 Hz																	
45	**280 S**	991	435	IE3	94.8	95.1	94.9	0.85	81	3.1	8.5	3.4	63	77	▲ **1LE5584-2DC0** ■-■■■■	547	1.88
55	**280 M**	990	530	IE3	95.1	95.4	95.1	0.84	99	3	9	3.7	61	75	▲ **1LE5584-2DC2** ■-■■■■	576	2.09
75	**315 S**	993	720		95.4	95.5	95	0.81	140	2.4	7	2.8	61	75	▲ **1LE5584-3AC0** ■-■■■■	832	3.02
90	**315 M**	993	870	IE3	95.6	95.7	95.2	0.83	164	2.4	7.1	2.8	61	75	▲ **1LE5584-3AC2** ■-■■■■	908	3.57
110	**315 L**	993	1060		95.8	95.9	95.6	0.82	200	2.7	7.5	3	62	77	▲ **1LE5584-3AC4** ■-■■■■	1020	4.25
132	**315 L**	993	1270		96	96.1	95.8	0.82	240	2.7	7.6	3	62	76	▲ **1LE5584-3AC5** ■-■■■■	1090	4.86
160	**315 L**	993	1540		96.2	96.3	95.9	0.81	295	2.8	7.6	3.1	67	82	▲ **1LE5584-3AC6** ■-■■■■	1260	5.72
200	**315 L**	993	1920		96.3	96.4	96.1	0.82	365	3.2	8.6	3.3	68	83	▲ **1LE5584-3AC7** ■-■■■■	1480	6.89
8-pole: 750 rpm at 50 Hz																	
37	**280 M**	740	475	IE3	93.1	93.6	93.4	0.8	72	2.8	7	2.8	60	74	▲ **1LE5584-2DD0** ■-■■■■	558	1.9
45	**280 M**	741	580	IE3	93.4	93.9	93.8	0.79	88	2.6	7	2.9	60	75	▲ **1LE5584-2DD2** ■-■■■■	562	2.08
55	**315 S**	742	710		93.7	94	93.7	0.79	107	2.2	6.1	2.4	57	72	▲ **1LE5584-3AD0** ■-■■■■	752	2.53
75	**315 M**	742	970		94.2	94.6	94.3	0.79	145	2.3	6.2	2.5	58	72	▲ **1LE5584-3AD2** ■-■■■■	825	3.13
90	**315 L**	742	1160		94.4	94.9	94.7	0.81	170	2.3	6.2	2.4	61	75	▲ **1LE5584-3AD4** ■-■■■■	933	3.72
110	**315 L**	742	1420	IE3	94.7	95	94.7	0.78	215	2.5	6.9	2.8	61	75	▲ **1LE5584-3AD5** ■-■■■■	1020	4.44
132	**315 L**	742	1700		94.9	95.2	94.8	0.78	255	2.8	6.7	2.8	64	78	▲ **1LE5584-3AD6** ■-■■■■	1110	5.27

Voltages [1]		Version							Order code
50 Hz 400 VΔ/690 VY	60 Hz [1] 460 VΔ	**Standard**	**3**	**4**					–
50 Hz 500 VΔ		Without additional charge	**4**	**0**					–
50 Hz 690 VΔ		With additional charge	**4**	**7**					–
For other voltages and more information, see from page 4/27			■	■					**...**
Types of construction		Version							Order code
Without flange	IM B3	**Standard**			**A**				–
With flange	IM B5	With additional charge			**F**				–
For other types of construction and more information, see from page 4/31					■				**...**
Motor protection		Version							Order code
Without		**Standard**				**A**			–
PTC thermistor with 3 temperature sensors		With additional charge				**B**			–
For other motor protection and more information, see from page 4/34						■			**...**
Terminal box position		Version							Order code
Terminal box base left with terminal box 45°		Without additional charge					**2**		–
Terminal box base right with terminal box 45° [2]		**Standard**					**3**		–
Terminal box at top		**Standard**					**4**		
For other terminal box positions and more information, see from page 4/35							■		**...**
Special versions									Order code(s)
Forced-air cooled motors w/o ext. fan/fan cover (IC418)		**1LE5584-....**	■	-	■	■	■	**-Z**	**F90+...+...+...**
For options and information, see from page 4/36		**1LE5584-....**	■	-	■	■	■	**-Z**	**...+...+...+...**

[1] Parallel supply lines are required, except in the case of connection to 690 V.
[2] Only for 6-pole motors with power rating of 200 kW.

© Innomotics 2024

Selection and ordering data

P_{rated}, 50 Hz/P50 kW	Frame size FS	Operating values at rated power n_{rated}, 50 Hz rpm	T_{rated}, 50 Hz Nm	Different IE class 60 Hz/P60	η_{rated}, 50 Hz, 4/4 %	η_{rated}, 50 Hz, 3/4 %	η_{rated}, 50 Hz, 2/4 %	$\cos\varphi_{rated}$, 50 Hz, 4/4	I_{rated}, 50 Hz, 400 V A	T_{LR}/T_{rated}, 50 Hz	I_{LR}/I_{rated}, 50 Hz	T_B/T_{rated}, 50 Hz	L_{pfA}, 50 Hz dB(A)	L_{WA}, 50 Hz dB(A)	Cast-iron series 1LE5503 Basic Line Article No.	$m_{IM\ B3}$ kg	J kgm²
_ Cooling: Self-ventilated (IC411)																	
_ Efficiency according to IEC 60034-30-1: IE3 Premium Efficiency																	
_ Insulation: Thermal class 155 (temperature class F), IP55 degree of protection, utilization in accordance with thermal class 130 (temperature class B)																	
2-pole: 3000 rpm at 50 Hz																	
250	**315 L**	2986	800		95.8	95.7	95	0.88	430	3	9.3	4.2	80	94	**1LE5503-3AA6** ■-■■■■	1340	2.82
315	**315 L**	2986	1010		95.8	95.6	94.8	0.87	550	3.5	9.9	4.2	81	96	**1LE5503-3AA7** ■-■■■■	1520	3.27
4-pole: 1500 rpm at 50 Hz																	
250	**315 L**	1490	1600		96	96.1	95.7	0.85	440	2.8	7.9	3.2	75	91	**1LE5503-3AB6** ■-■■■■	1290	4.27
315	**315 L**	1490	2000		96	96	95.6	0.83	570	3.2	8.5	3.5	75	90	**1LE5503-3AB7** ■-■■■■	1560	5.39
6-pole: 1000 rpm at 50 Hz																	
200	**315 L**	992	1930		95.8	95.9	95.6	0.82	365	3	7.5	3.2	68	83	**1LE5503-3AC7** ■-■■■■	1410	6.32
250	**315 L**	992	2400		95.8	95.9	95.6	0.81	465	3.2	8.2	3.3	69	84	**1LE5503-3AC8** ■-■■■■	1700	8
8-pole: 750 rpm at 50 Hz																	
160	**315 L**	741	2050		94.3	94.7	94.7	0.79	310	2.3	6.3	2.5	64	79	**1LE5503-3AD7** ■-■■■■	1420	6.78
200	**315 L**	742	2550		94.6	94.8	94.6	0.78	390	2.9	6.7	2.8	72	86	**1LE5503-3AD8** ■-■■■■	1660	8.5

Voltages [1]		Version						Order code
50 Hz 400 VΔ/690 VY	60 Hz [1] 460 VΔ	**Standard**	**3**	**4**				–
50 Hz 500 VΔ		Without additional charge	**4**	**0**				–
50 Hz 690 VΔ		With additional charge	**4**	**7**				–
For other voltages [1] and more information, see from page 4/27			■	■				**...**
Types of construction		Version						Order code
Without flange	IM B3	**Standard**			**A**			–
With flange	IM B5	With additional charge			**F**			–
For other types of construction and more information, see from page 4/31					■			**...**
Motor protection		Version						Order code
Without		**Standard**				**A**		–
PTC thermistor with 3 temperature sensors		With additional charge				**B**		–
For other motor protection and more information, see from page 4/34						■		**...**
Terminal box position		Version						Order code
Terminal box base left with terminal box 45° [2]		Without additional charge					**2**	–
Terminal box base right with terminal box 45° [2]		**Standard**					**3**	–
For other terminal box positions and more information, see from page 4/35							■	**...**
Special versions								Order code(s)
For options, see from page 4/36		**1LE5503-....** ■-■■■■ -Z						...+...+...+...

[1] Parallel supply lines are required, except in the case of connection to 690 V.

[2] For a power rating of 315 kW, 2-pole, 60 Hz and 315 kW, 4-pole, 50 Hz, a larger terminal box can be used (order code **R50**) due to the magnitude of the current. Order code **R50** alters the motor dimensions.

© Innomotics 2024

Selection and ordering data

P_{rated}, 50 Hz/ P50 kW	Frame size FS	Operating values at rated power n_{rated}, 50 Hz rpm	T_{rated}, 50 Hz Nm	Different IE class 60 Hz/P60	η_{rated}, 50 Hz, 4/4 %	η_{rated}, 50 Hz, 3/4 %	η_{rated}, 50 Hz, 2/4 %	$\cos\varphi_{rated}$, 50 Hz, 4/4	I_{rated}, 50 Hz, 400 V A	T_{LR}/T_{rated}, 50 Hz	I_{LR}/I_{rated}, 50 Hz	T_B/T_{rated}, 50 Hz	L_{pfA}, 50 Hz dB(A)	L_{WA}, 50 Hz dB(A)	Cast-iron series 1LE5603 Performance Line Article No.	$m_{IM\ B3}$ kg	J kgm²
_ Cooling: Self-ventilated (IC411)																	
_ Efficiency according to IEC 60034-30-1: IE3 Premium Efficiency																	
_ Insulation: Thermal class 155 (temperature class F), IP55 degree of protection, utilization in accordance with thermal class 130 (temperature class B)																	
2-pole: 3000 rpm at 50 Hz																	
250	**315 L**	2986	800		95.8	95.7	95	0.88	430	3	9.3	4.2	80	94	**1LE5603-3AA6** ■-■■■■	1340	2.82
315	**315 L**	2986	1010		95.8	95.6	94.8	0.87	550	3.5	9.9	4.2	81	96	**1LE5603-3AA7** ■-■■■■	1520	3.27
355	**355 L**	2988	1130		95.8	95.6	94.8	0.89	600	2.6	8.9	4	84	99	**1LE5603-3BA3** ■-■■■■	2100	4.74
400	**355 L**	2986	1280		95.8	95.7	95.2	0.92	660	2.6	8.5	3.4	83	98	**1LE5603-3BA4** ■-■■■■	2240	5.4
500	**355 L**	2988	1600		95.8	95.7	95.1	0.89	850	3	8.9	3.8	84	98	**1LE5603-3BA5** ■-■■■■	2340	5.76
4-pole: 1500 rpm at 50 Hz																	
250	**315 L**	1490	1600		96	96.1	95.7	0.85	440	2.8	7.9	3.2	75	91	**1LE5603-3AB6** ■-■■■■	1290	4.27
315	**315 L**	1490	2000		96	96	95.6	0.83	570	3.2	8.5	3.5	75	90	**1LE5603-3AB7** ■-■■■■	1560	5.39
355	**355 L**	1492	2250		96	96	95.4	0.86	620	2.9	7.9	2.8	81	96	**1LE5603-3BB3** ■-■■■■	2020	6.76
400	**355 L**	1492	2550		96	96	95.5	0.84	720	3.4	8.4	3	81	96	**1LE5603-3BB4** ■-■■■■	2110	7.16
500	**355 L**	1491	3200		96	96.1	95.9	0.86	870	3.1	8.1	3.3	80	96	**1LE5603-3BB5** ■-■■■■	2290	8.36
6-pole: 1000 rpm at 50 Hz																	
200	**315 L**	992	1930		95.8	95.9	95.6	0.82	365	3	7.5	3.2	68	83	**1LE5603-3AC7** ■-■■■■	1410	6.28
250	**315 L**	992	2400		95.8	95.9	95.6	0.81	465	3.2	8.2	3.3	69	84	**1LE5603-3AC8** ■-■■■■	1700	8
315	**355 L**	993	3050		95.8	95.8	95.3	0.82	580	2.9	7.8	3.2	75	90	**1LE5603-3BC2** ■-■■■■	2040	11.6
355	**355 L**	993	3400		95.8	95.9	95.5	0.83	640	2.9	8.4	3.3	74	89	**1LE5603-3BC3** ■-■■■■	2250	13.7
400	**355 L**	994	3850		95.8	96	95.8	0.84	720	2.8	8.1	3	75	90	**1LE5603-3BC4** ■-■■■■	2240	13.4
8-pole: 750 rpm at 50 Hz																	
160	**315 L**	741	2050		94.3	94.7	94.7	0.79	310	2.3	6.3	2.5	64	79	**1LE5603-3AD7** ■-■■■■	1420	6.78
200	**315 L**	742	2550		94.6	94.8	94.6	0.78	390	2.9	6.7	2.8	72	86	**1LE5603-3AD8** ■-■■■■	1660	8.5
250	**355 L**	744	3200		94.6	95	95	0.8	475	2.4	7.1	2.7	73	88	**1LE5603-3BD1** ■-■■■■	2280	13.3
315	**355 L**	744	4050		94.6	94.9	94.6	0.8	600	2.5	7.3	3	73	88	**1LE5603-3BD2** ■-■■■■	2310	14

Voltages [1]		Version						Order code
50 Hz 400 VΔ/690 VY	60 Hz [1] 460 VΔ	**Standard**	**3**	**4**				–
50 Hz 500 VΔ		Without additional charge	**4**	**0**				–
50 Hz 690 VΔ		With additional charge	**4**	**7**				–
For other voltages [1] and more information, see from page 4/27			■	■				**...**
Types of construction		Version						Order code
Without flange	IM B3	**Standard**			**A**			–
With flange	IM B5	With additional charge			**F**			–
For other types of construction and more information, see from page 4/31					■			**...**
Motor protection		Version						Order code
PTC thermistor with 3 temperature sensors		**Standard**				**B**		–
For other motor protection and more information, see from page 4/34						■		**...**
Terminal box position		Version						Order code
Terminal box base left with terminal box 45° [2]		Without additional charge					**2**	–
Terminal box base right with terminal box 45° [2]		**Standard**					**3**	–
For other terminal box positions and more information, see from page 4/35							■	**...**
Special versions								Order code(s)
For options, see from page 4/36		**1LE5603-....**	■	■	■	■	■	**-Z ...+...+...+...**

[1] Parallel supply lines are required, except in the case of connection to 690 V.
[2] For a power rating of 315 kW, 2-pole, 60 Hz and 315 kW, 4-pole, 50 Hz, a larger terminal box can be used (order code **R50**) due to the magnitude of the current. Order code **R50** alters the motor dimensions.

© Innomotics 2024

Cast-iron series Innomotics SD Add 1LE5533 Basic Line – self-ventilated or forced-air cooled

Selection and ordering data

P_{rated}, 50 Hz/ P50 kW	Frame size FS	Operating values at rated power n_{rated}, 50 Hz rpm	T_{rated}, 50 Hz Nm	Different IE class 60 Hz/P60	η_{rated}, 50 Hz, 4/4 %	η_{rated}, 50 Hz, 3/4 %	η_{rated}, 50 Hz, 2/4 %	$\cos\varphi_{rated}$, 50Hz, 4/4	I_{rated}, 50 Hz, 400 V A	T_{LR}/T_{rated}, 50 Hz	I_{LR}/I_{rated}, 50 Hz	T_B/T_{rated}, 50 Hz	L_{pfA}, 50 Hz dB(A)	L_{WA}, 50 Hz dB(A)	Cast-iron series 1LE5533 Basic Line Article No.	$m_{IM\ B3}$ kg	J kgm²
_ Cooling: Self-ventilated (IC411)																	
_ Efficiency according to IEC 60034-30-1: IE3 Premium Efficiency																	
_ Insulation: Thermal class 155 (temperature class F), IP55 degree of protection, utilization in accordance with thermal class 130 (temperature class B)																	
2-pole: 3000 rpm at 50 Hz																	
250	**315 L**	2982	800		95.8	95.9	95.6	0.91	2.8	415	7.2	3	80	94	**1LE5533-3AA6** ■-■■■■	1340	2.82
315	**315 L**	2980	1010		95.8	96	95.8	0.91	2.4	520	7.5	2.9	81	96	**1LE5533-3AA7** ■-■■■■	1490	3.11
560 1) 2)	**400**	2986	1790		96.6	96.7	96.3	0.9	1.7	930	7	3.2	74	90	**1LE5533-4AA3** ■-■■■■	2900	8.9
630 1) 2)	**400**	2986	2000		96.6	96.7	96.6	0.91	1.6	1030	7	3	74	90	**1LE5533-4AA5** ■-■■■■	3000	9.8
710 3)	**400**	2986	2250		96.8	96.9	96.7	0.91	1.6	670	7	2.9	74	90	**1LE5533-4AA7** ■-■■■■	3200	10.8
800 1) 2) 3) 4)	**450**	2988	2550		96.9	96.9	96.6	0.89	1.6	780	7.7	3.7	75	91	**1LE5533-4BA3** ■-■■■■	4000	12.3
900 1) 2) 3) 4)	**450**	2986	2900		97	97.1	96.9	0.89	1.5	870	7	3.4	75	91	**1LE5533-4BA5** ■-■■■■	4300	13.5
1000 1) 2) 3) 4)	**450**	2984	3200		97	97.2	97.1	0.9	1.5	960	6.5	3.1	75	91	**1LE5533-4BA7** ■-■■■■	4500	14.7
4-pole: 1500 rpm at 50 Hz																	
250	**315 L**	1490	1600		96	96.2	95.9	0.87	2.1	430	7.2	2.8	75	91	**1LE5533-3AB6** ■-■■■■	1400	4.55
315	**315 L**	1488	2000		96	96.2	96.1	0.85	2.2	560	7.2	2.8	75	90	**1LE5533-3AB7** ■-■■■■	1530	5.28
560	**400**	1492	3600		96.2	96.3	95.8	0.87	1.8	970	6.5	2.7	78	94	**1LE5533-4AB3** ■-■■■■	2800	12.8
630 1)	**400**	1492	4050		96.4	96.5	95.9	0.87	1.9	1080	6.8	2.7	78	94	**1LE5533-4AB5** ■-■■■■	3000	14.4
710 3)	**400**	1492	4550		96.5	96.6	96.2	0.88	1.9	700	6.8	2.7	78	94	**1LE5533-4AB7** ■-■■■■	3200	16.5
800 3)	**450**	1492	5100		96.5	96.6	96.1	0.87	1.9	800	7	2.8	81	97	**1LE5533-4BB3** ■-■■■■	3900	22.2
900 3)	**450**	1492	5800		96.6	96.7	96.2	0.86	1.6	910	7	2.7	81	97	**1LE5533-4BB5** ■-■■■■	4100	24.8
1000 1)	**450**	1492	6400		96.6	96.7	96.3	0.88	2	980	7	2.7	81	97	**1LE5533-4BB7** ■-■■■■	4300	27.4

Voltages 6)		Version						Order code
50 Hz 400 VΔ/690 VY	60 Hz 6) 460 VΔ	**Standard**	**3**	**4**				–
50 Hz 500 VΔ	60 Hz 575 VΔ	Without additional charge	**4**	**0**				–
50 Hz 690 VΔ		With additional charge	**4**	**7**				–
For other voltages 6) and more information, see from page 4/27			■	■				**...**
Types of construction		Version						Order code
Without flange	IM B3	**Standard**			**A**			–
With flange	IM B5	With additional charge			**F**			–
For other types of construction and more information, see from page 4/31					■			**...**
Motor protection		Version						Order code
Without		**Standard**				**A**		–
PTC thermistor with 3 temperature sensors		With additional charge				**B**		–
For other motor protection and more information, see from page 4/34						■		**...**
Terminal box position		Version						Order code
Terminal box base left with terminal box 45° 7)		Without additional charge					**2**	–
Terminal box base right with terminal box 45° 7)		**Standard**					**3**	–
For other terminal box positions and more information, see from page 4/35							■	**...**
Special versions								Order code(s)
Forced-air cooled motors w/o ext. fan/fan cover (IC418)		**1LE5533-....**	■-■■■■				**-Z**	**F90+...+...+...**
For options and information, see from page 4/36		**1LE5533-....**	■-■■■■				**-Z**	**...+...+...+...**

For legends and foot notes, see page 4/23.

© Innomotics 2024

Selection and ordering data

P_{rated}, 50 Hz/ P50 kW	Frame size FS	Operating values at rated power n_{rated}, 50 Hz rpm	T_{rated}, 50 Hz Nm	Different IE class 60 Hz/P60	η_{rated}, 50 Hz, 4/4 %	η_{rated}, 50 Hz, 3/4 %	η_{rated}, 50 Hz, 2/4 %	$\cos\varphi_{rated}$, 50 Hz, 4/4	I_{rated}, 50 Hz, 400 V A	T_{LR}/T_{rated}, 50 Hz	I_{LR}/I_{rated}, 50 Hz	T_B/T_{rated}, 50 Hz	L_{pfA}, 50 Hz dB(A)	L_{WA}, 50 Hz dB(A)	Cast-iron series 1LE5533 Basic Line Article No.	$m_{IM\ B3}$ kg	J kgm²
_ Cooling: Self-ventilated (IC411)																	
_ Efficiency according to IEC 60034-30-1: IE3 Premium Efficiency																	
_ Insulation: Thermal class 155 (temperature class F), IP55 degree of protection, utilization in accordance with thermal class 130 (temperature class B)																	
6-pole: 1000 rpm at 50 Hz																	
200	**315 L**	992	1930		95.8	96	95.8	0.81	370	2.8	7	3	68	83	**1LE5533-3AC7 ■-■■■■**	1410	6.39
250	**315 L**	992	2400		95.8	95.9	95.6	0.81	465	2.9	7.2	3	68	83	**1LE5533-3AC8 ■-■■■■**	1640	8.1
450	**400**	992	4350		96	96	95.7	0.85	640	2.2	6.7	2.9	72	88	**1LE5533-4AC3 ■-■■■■**	2900	22
500	**400**	992	4800		96.1	96.1	95.8	0.85	710	2.1	6.9	2.8	72	88	**1LE5533-4AC5 ■-■■■■**	3100	24.7
560 [1]	**400**	992	5400		96.2	96.3	96	0.86	780	2	6.6	2.8	72	88	**1LE5533-4AC7 ■-■■■■**	3300	27.8
630 [1]	**450**	993	6100		96.3	96.4	96.2	0.83	910	1.9	6.6	2.6	74	90	**1LE5533-4BC3 ■-■■■■**	3800	34.4
710 [3]	**450**	993	6800		96.3	96.4	96.3	0.85	1000	2.1	6.2	2.6	74	90	**1LE5533-4BC5 ■-■■■■**	4100	38.5
800 [1]	**450**	993	7700		96.5	96.7	96.5	0.85	1130	2.1	6.7	2.6	74	90	**1LE5533-4BC7 ■-■■■■**	4300	43.1
8-pole: 750 rpm at 50 Hz																	
160	**315 L**	741	2050		94.3	94.7	94.7	0.79	310	2.4	6.2	2.4	67	82	**1LE5533-3AD7 ■-■■■■**	1420	6.78
200	**315 L**	742	2550		94.6	94.8	94.6	0.78	390	2.9	6.7	2.8	72	86	**1LE5533-3AD8 ■-■■■■**	1660	8.5
355	**400**	742	4550		95.6	95.7	95.5	0.81	530	1.9	6.2	2.5	64	80	**1LE5533-4AD3 ■-■■■■**	2900	21.9
400	**400**	742	5100		95.7	95.8	95.6	0.82	590	1.9	6.2	2.4	64	80	**1LE5533-4AD5 ■-■■■■**	3100	24.5
450	**400**	742	5800		95.7	95.8	95.7	0.81	670	2.2	6.6	2.7	64	80	**1LE5533-4AD7 ■-■■■■**	3300	27.5
500 [5]	**450**	744	6400		95.8	96	95.8	0.81	740	1.9	6.2	2.3	67	83	**1LE5533-4BD3 ■-■■■■**	3800	34
560 [5]	**450**	744	7200		96	96.1	95.9	0.81	830	1.8	6.3	2.3	67	83	**1LE5533-4BD5 ■-■■■■**	4000	38
630 [1]	**450**	744	8100		96.1	96.2	95.9	0.8	950	1.8	6.6	2.4	67	83	**1LE5533-4BD7 ■-■■■■**	4300	42.5

Voltages [6]		Version						Order code
50 Hz 400 VΔ/690 VY	60 Hz [6] 460 VΔ	**Standard**	**3**	**4**				–
50 Hz 500 VΔ	60 Hz 575 VΔ	Without additional charge	**4**	**0**				–
50 Hz 690 VΔ		With additional charge	**4**	**7**				–
For other voltages [6] and more information, see from page 4/27			■	■				**...**
Types of construction		Version						Order code
Without flange	IM B3	**Standard**			**A**			–
With flange	IM B5	With additional charge			**F**			–
For other types of construction and more information, see from page 4/31					■			**...**
Motor protection		Version						Order code
Without		**Standard**				**A**		–
PTC thermistor with 3 temperature sensors		With additional charge				**B**		–
For other motor protection and more information, see from page 4/34						■		**...**
Terminal box position		Version						Order code
Terminal box base left with terminal box 45° [7]		Without additional charge					**2**	–
Terminal box base right with terminal box 45° [7]		**Standard**					**3**	–
For other terminal box positions and more information, see from page 4/35							■	**...**
Special versions								Order code(s)
Forced-air cooled motors w/o ext. fan/fan cover (IC418)		**1LE5533-....**	■	-	■■■■		-Z	**F90+...+...+...**
For options and information, see from page 4/36		**1LE5533-....**	■	-	■■■■		-Z	**...+...+...+...**

4

1) Terminal box 1XB1631.
2) Terminal box position NDE can only be ordered using order code **H09** (2 × terminal box TB3R61). Order code **H08** not available.
3) The standard version is 50 Hz 690 VΔ (voltage code **4-7**) or 60 Hz 575 VΔ (voltage code **4-0**).
4) In the series version, the maximum speed is n_{max} = 3000 rpm. Operation up to 3600 rpm on request for an additional charge.
5) Utilization with sinusoidal supply in accordance with thermal class 155 (temperature class F).
6) For frame size 315, parallel supply lines are required, except in the case of connection to 690 V.
7) For frame size 315 with power rating 315 kW, 2-pole, 60 Hz and 315 kW, 4-pole, 50 Hz, a larger terminal box can be used (order code **R50**) due to the magnitude of the current. Order code **R50** alters the motor dimensions

© Innomotics 2024

Selection and ordering data

P_{rated}, 50 Hz/P50 kW	Frame size FS	Operating values at rated power n_{rated}, 50 Hz rpm	T_{rated}, 50 Hz Nm	Different IE class 60 Hz/P60	η_{rated}, 50 Hz, 4/4 %	η_{rated}, 50 Hz, 3/4 %	η_{rated}, 50 Hz, 2/4 %	$\cos\varphi_{rated}$, 50 Hz, 4/4	I_{rated}, 50 Hz, 400 V A	T_{LR}/T_{rated}, 50 Hz	I_{LR}/I_{rated}, 50 Hz	T_B/T_{rated}, 50 Hz	L_{pfA}, 50 Hz dB(A)	L_{WA}, 50 Hz dB(A)	Cast-iron series 1LE5633 Performance Line Article No.	$m_{IM\ B3}$ kg	J kgm²
_ Cooling: Self-ventilated (IC411)																	
_ Efficiency according to IEC 60034-30-1: IE3 Premium Efficiency																	
_ Insulation: Thermal class 155 (temperature class F), IP55 degree of protection, utilization in accordance with thermal class 130 (temperature class B)																	
2-pole: 3000 rpm at 50 Hz																	
250	**315 L**	2982	800		95.8	95.9	95.6	0.91	415	2.8	7.2	3	80	94	**1LE5633-3AA6** ■-■■■■	1340	2.82
315	**315 L**	2980	1010		95.8	96	95.8	0.91	520	2.4	7.5	2.9	81	96	**1LE5633-3AA7** ■-■■■■	1490	3.11
355	**355 L**	2984	1140		95.8	95.7	95.2	0.9	590	2.3	8.4	3.1	83	98	**1LE5633-3BA3** ■-■■■■	2170	5.09
400	**355 L**	2986	1280		95.8	95.8	95.3	0.91	660	2.3	7.7	3.1	83	98	**1LE5633-3BA4** ■-■■■■	2240	5.46
500	**355 L**	2988	1600		95.8	95.7	95.1	0.89	850	2.8	8.5	3.7	83	98	**1LE5633-3BA5** ■-■■■■	2340	5.76
4-pole: 1500 rpm at 50 Hz																	
250	**315 L**	1490	1600		96	96.2	95.9	0.87	430	2.1	7.2	2.8	75	91	**1LE5633-3AB6** ■-■■■■	1400	4.55
315	**315 L**	1488	2000		96	96.2	96.1	0.85	560	2.2	7.2	2.8	75	90	**1LE5633-3AB7** ■-■■■■	1530	5.28
355	**355 L**	1491	2250		96	96.1	95.8	0.88	610	2.2	7.5	3.1	81	95	**1LE5633-3BB3** ■-■■■■	2070	6.36
400	**355 L**	1491	2550		96	96.1	95.9	0.87	690	2.1	7.3	3	80	95	**1LE5633-3BB4** ■-■■■■	2100	7.06
500	**355 L**	1491	3200		96	96.1	95.9	0.86	870	3.1	7.9	3.3	80	96	**1LE5633-3BB5** ■-■■■■	2290	8.36
6-pole: 1000 rpm at 50 Hz																	
200	**315 L**	992	1930		95.8	96	95.8	0.81	370	2.8	7	3	68	83	**1LE5633-3AC7** ■-■■■■	1410	6.39
250	**315 L**	992	2400		95.8	95.9	95.6	0.81	465	2.9	7.2	3	68	83	**1LE5633-3AC8** ■-■■■■	1640	8.1
315	**355 L**	992	3050		95.8	96.1	96.1	0.86	550	2.4	6.8	2.8	75	90	**1LE5633-3BC2** ■-■■■■	2150	12.9
355	**355 L**	993	3400		95.8	95.9	95.6	0.84	640	2.6	7.4	3.2	76	91	**1LE5633-3BC3** ■-■■■■	2250	13.8
400	**355 L**	994	3850		95.8	96	95.8	0.84	720	2.7	7.7	2.9	75	90	**1LE5633-3BC4** ■-■■■■	2240	13.4
8-pole: 750 rpm at 50 Hz																	
160	**315 L**	741	2050		94.3	94.7	94.7	0.79	310	2.2	6.2	2.4	64	79	**1LE5633-3AD7** ■-■■■■	1420	6.78
200	**315 L**	742	2550		94.6	94.8	94.6	0.78	390	2.9	6.7	2.8	72	86	**1LE5633-3AD8** ■-■■■■	1660	8.5
250	**355 L**	744	3200		94.6	95	95	0.8	475	2.4	7.1	2.7	73	88	**1LE5633-3BD1** ■-■■■■	2280	13.3
315	**355 L**	744	4050		94.6	94.9	94.6	0.8	600	2.4	7	2.9	73	88	**1LE5633-3BD2** ■-■■■■	2310	14

Voltages [1]		Version						Order code
50 Hz 400 VΔ/690 VY	60 Hz [1] 460 VΔ	**Standard**	**3**	**4**				–
50 Hz 500 VΔ		Without additional charge	**4**	**0**				–
50 Hz 690 VΔ		With additional charge	**4**	**7**				–
For other voltages [1] and more information, see from page 4/27			■	■				**...**
Types of construction		Version						Order code
Without flange	IM B3	**Standard**			**A**			–
With flange	IM B5	With additional charge			**F**			–
For other types of construction and more information, see from page 4/31					■			**...**
Motor protection		Version						Order code
PTC thermistor with 3 temperature sensors		**Standard**				**B**		–
For other motor protection and more information, see from page 4/34						■		**...**
Terminal box position		Version						Order code
Terminal box base left with terminal box 45° [2]		Without additional charge					**2**	–
Terminal box base right with terminal box 45° [2]		**Standard**					**3**	–
For other terminal box positions and more information, see from page 4/35							■	**...**

Special versions		Order code(s)
Forced-air cooled motors w/o ext. fan/fan cover (IC418)	**1LE5633-....** ■-■■■■ -Z	**F90+...+...+...**
For options and information, see from page 4/36	**1LE5633-....** ■-■■■■ -Z	**...+...+...+...**

[1] Parallel supply lines are required, except in the case of connection to 690 V.
[2] For a power rating of 315 kW, 2-pole, 60 Hz and 315 kW, 4-pole, 50 Hz, a larger terminal box can be used (order code **R50**) due to the magnitude of the current. Order code **R50** alters the motor dimensions.

© Innomotics 2024

Selection and ordering data

P_{rated}, 50 Hz/ P50 kW	Frame size FS	Operating values at rated power n_{rated}, 50 Hz rpm	T_{rated}, 50 Hz Nm	Different IE class 60 Hz/P60	η_{rated}, 50 Hz, 4/4 %	η_{rated}, 50 Hz, 3/4 %	η_{rated}, 50 Hz, 2/4 %	$\cos\varphi_{rated}$, 50Hz, 4/4	I_{rated}, 50 Hz, 400 V A	T_{LR}/T_{rated}, 50 Hz	I_{LR}/I_{rated}, 50 Hz	T_B/T_{rated}, 50 Hz	L_{pfA}, 50 Hz dB(A)	L_{WA}, 50 Hz dB(A)	Cast-iron series 1LE5583 Basic Line Article No.	$m_{IM\ B3}$ kg	J kgm²
_ Cooling: Self-ventilated (IC411)																	
_ Efficiency according to IEC 60034-30-1: IE3 Premium Efficiency																	
_ Insulation: Thermal class 155 (temperature class F), IP55 degree of protection, with sinusoidal supply or converter operation, utilization in accordance with thermal class 155 (temperature class F)																	
_ Optional and suitable for converter operation; $U_{line} \leq 690$ V - IVIC-C premiuminsulation system																	
2-pole: 3000 rpm at 50 Hz																	
250	**315 L**	2986	800		95.8	95.7	95	0.88	430	3	9.4	3.8	81	94	**1LE5583-3AA6** ■-■■■■	1340	2.82
315	**315 L**	2988	1010		95.8	95.6	94.7	0.87	550	3.7	10	4.3	82	96	**1LE5583-3AA7** ■-■■■■	1510	3.27
545 [1]	**400**	2988	1740		96.5	96.6	96.2	0.9	910	1.8	7.3	3.3	74	90	**1LE5583-4AA3** ■-■■■■	2900	8.9
610 [1]	**400**	2988	1950		96.5	96.6	96.5	0.91	1000	1.6	7.3	3.1	74	90	**1LE5583-4AA5** ■-■■■■	3000	9.8
680 [2]	**400**	2988	2150		96.7	96.8	96.6	0.91	650	1.7	7.3	3.1	74	90	**1LE5583-4AA7** ■-■■■■	3200	10.8
775 [1] [2] [3]	**450**	2989	2500		96.8	96.8	96.5	0.89	750	1.7	8.5	3.8	75	91	**1LE5583-4BA3** ■-■■■■	4000	12.3
875 [1] [2] [3]	**450**	2988	2800		96.9	97	96.7	0.89	850	1.7	7.7	3.7	75	91	**1LE5583-4BA5** ■-■■■■	4300	13.5
970 [1] [2] [3]	**450**	2987	3100		97	97.1	97	0.9	930	1.5	6.7	3.2	75	91	**1LE5583-4BA7** ■-■■■■	4500	14.7
4-pole: 1500 rpm at 50 Hz																	
250	**315 L**	1491	1600		96	96	95.6	0.84	445	3.2	8.1	3	75	90	**1LE5583-3AB6** ■-■■■■	1450	4.6
315	**315 L**	1490	2000		96	96.1	95.8	0.82	580	3	8.4	3.1	80	95	**1LE5583-3AB7** ■-■■■■	1600	5.39
545	**400**	1492	3500		96.1	96.2	95.7	0.87	940	1.8	6.7	2.7	78	94	**1LE5583-4AB3** ■-■■■■	2800	12.8
615	**400**	1492	3950		96.3	96.4	95.9	0.87	1060	1.9	6.9	2.8	78	94	**1LE5583-4AB5** ■-■■■■	3000	14.4
690 [2]	**400**	1492	4400		96.4	96.5	96.2	0.88	680	2	7	2.7	78	94	**1LE5583-4AB7** ■-■■■■	3200	16.5
785 [2]	**450**	1492	5000		96.4	96.5	96	0.87	780	2	7.2	2.8	81	97	**1LE5583-4BB3** ■-■■■■	3900	22.2
880 [2]	**450**	1492	5600		96.5	96.6	96.1	0.86	890	1.7	7.2	2.8	81	97	**1LE5583-4BB5** ■-■■■■	4100	24.8
980 [2]	**450**	1492	6300		96.5	96.6	96.2	0.88	970	2	7.1	2.8	81	97	**1LE5583-4BB7** ■-■■■■	4300	27.4
6-pole: 1000 rpm at 50 Hz																	
200	**315 L**	993	1920		95.8	95.9	95.5	0.83	365	3.1	8.9	3.3	70	85	**1LE5583-3AC7** ■-■■■■	1500	6.89
250	**315 L**	993	2400		95.8	95.9	95.6	0.81	465	3.4	8.8	3.3	70	84	**1LE5583-3AC8** ■-■■■■	1630	8
435	**400**	993	4200		95.9	96	95.7	0.84	780	2	6.7	2.8	72	88	**1LE5583-4AC3** ■-■■■■	2900	22
485	**400**	993	4650		96	96.1	95.7	0.86	850	2	6.7	2.7	72	88	**1LE5583-4AC5** ■-■■■■	3100	24.7
545 [1]	**400**	993	5200		96.1	96.2	95.9	0.86	950	2.1	6.7	2.9	72	88	**1LE5583-4AC7** ■-■■■■	3300	27.8
615 [1]	**450**	993	5900		96.3	96.5	96.2	0.84	1100	2.1	6.6	2.7	74	90	**1LE5583-4BC3** ■-■■■■	3800	34.4
690 [2]	**450**	993	6600		96.5	96.7	96.5	0.85	700	2	6.3	2.5	74	90	**1LE5583-4BC5** ■-■■■■	4100	38.5
780 [2]	**450**	993	7500		96.6	96.7	96.5	0.85	790	2	6.7	2.6	74	90	**1LE5583-4BC7** ■-■■■■	4300	43.1
8-pole: 750 rpm at 50 Hz																	
335	**400**	744	4300		95.5	95.6	95.3	0.8	630	2	6.9	2.6	64	80	**1LE5583-4AD3** ■-■■■■	2900	21.9
375	**400**	744	4800		95.6	95.7	95.5	0.8	710	2.1	7.2	2.8	64	80	**1LE5583-4AD5** ■-■■■■	3100	24.5
425	**400**	744	5500		95.7	95.8	95.6	0.8	800	2.1	7.2	2.7	64	80	**1LE5583-4AD7** ■-■■■■	3300	27.5
485	**450**	745	6200		95.8	95.9	95.6	0.79	920	2	7	2.6	67	83	**1LE5583-4BD3** ■-■■■■	3800	34
545	**450**	745	7000		95.9	96	95.7	0.79	1040	2	7	2.6	67	83	**1LE5583-4BD5** ■-■■■■	4000	38
600 [1]	**450**	745	7700		96	96.1	95.7	0.8	1130	2.1	7.3	2.6	67	83	**1LE5583-4BD7** ■-■■■■	4300	42.5

Voltages [4]		Version						Order code
50 Hz 400 VΔ/690 VY	60 Hz [4] 460 VΔ	**Standard**	**3**	**4**				–
50 Hz 500 VΔ	60 Hz 575 VΔ	Without additional charge	**4**	**0**				–
50 Hz 690 VΔ		With additional charge	**4**	**7**				–
For other voltages [4] and more information, see from page 4/27			■	■				...
Types of construction		Version						Order code
Without flange	IM B3	**Standard**			**A**			–
With flange	IM B5	With additional charge			**F**			–
For other types of construction and more information, see from page 4/31					■			...
Motor protection		Version						Order code
Without		**Standard**				**A**		–
PTC thermistor with 3 temperature sensors		With additional charge				**B**		–
For other motor protection and more information, see from page 4/34						■		...
Terminal box position		Version						Order code
Terminal box base left with terminal box 45° [5]		Without additional charge					**2**	–
Terminal box base right with terminal box 45° [5]		**Standard**					**3**	–
For other terminal box positions and more information, see from page 4/35							■	...
Special versions								Order code(s)
Forced-air cooled motors w/o ext. fan/fan cover (IC418)		**1LE5583-....** ■-■■■■ -Z						**F90+...+...+...**
For options and information, see from page 4/36		**1LE5583-....** ■-■■■■ -Z						...+...+...+...

1) Terminal box 1XB1631.
2) The standard version is 50 Hz 690 VΔ (voltage code **4-7**) or 60 Hz 575 VΔ (voltage code **4-0**).
3) In the series version, the maximum speed is n_{max} = 3000 rpm. Operation up to 3600 rpm on request.
4) Parallel supply lines are required, except in the case of connection to 690 V.
5) For frame size 315 with power rating 315 kW, 2-pole, 60 Hz and 315 kW, 4-pole, 50 Hz, a larger terminal box can be used (order code **R50**) due to the magnitude of the current. Order code **R50** alters the motor dimensions.

© Innomotics 2024

Innomotics SD standard motors next generation

Cast-iron series Innomotics SD Pro 1LE5683 Performance Line – self-ventilated or forced-air cooled

Selection and ordering data

P_{rated}, 50 Hz/ P50 kW	Frame size FS	Operating values at rated power n_{rated}, 50 Hz rpm	T_{rated}, 50 Hz Nm	Different IE class 60 Hz/P60	η_{rated}, 50 Hz, 4/4 %	η_{rated}, 50 Hz, 3/4 %	η_{rated}, 50 Hz, 2/4 %	$\cos\varphi_{rated}$, 50Hz, 4/4	I_{rated}, 50 Hz, 400 V A	T_{LR}/T_{rated}, 50 Hz	I_{LR}/I_{rated}, 50 Hz	T_B/T_{rated}, 50 Hz	L_{pfA}, 50 Hz dB(A)	L_{WA}, 50 Hz dB(A)	Cast-iron series 1LE5683 Performance Line Article No.	$m_{IM\ B3}$ kg	J kgm²
_ Cooling: Self-ventilated (IC411)																	
_ Efficiency according to IEC 60034-30-1: IE3 Premium Efficiency																	
_ Insulation: Thermal class 155 (temperature class F), IP55 degree of protection, with sinusoidal supply or converter operation, utilization in accordance with thermal class 155 (temperature class F																	
2-pole: 3000 rpm at 50 Hz																	
250	**315 L**	2986	800		95.8	95.7	95	0.88	430	3	9.4	3.8	81	94	**1LE5683-3AA6 ■-■■■■**	1340	2.82
315	**315 L**	2988	1010		95.8	95.6	94.7	0.87	550	3.7	10	4.3	82	96	**1LE5683-3AA7 ■-■■■■**	1510	3.27
355	**355 L**	2988	1130		95.8	95.6	94.8	0.89	600	2.5	10	3.8	83	99	**1LE5683-3BA3 ■-■■■■**	2070	4.74
400	**355 L**	2986	1280		95.8	95.7	95.2	0.92	660	2.6	8.7	3.3	83	98	**1LE5683-3BA4 ■-■■■■**	2220	5.36
500	**355 L**	2988	1600		95.8	95.8	95.3	0.89	850	2.8	9.1	3.8	81	96	**1LE5683-3BA5 ■-■■■■**	2330	5.76
4-pole: 1500 rpm at 50 Hz																	
250	**315 L**	1491	1600		96	96	95.6	0.84	445	3.2	8.1	3	75	90	**1LE5683-3AB6 ■-■■■■**	1450	4.6
315	**315 L**	1490	2000		96	96.1	95.8	0.82	580	3	8.4	3.1	80	95	**1LE5683-3AB7 ■-■■■■**	1600	5.39
355	**355 L**	1492	2250		96	96	95.5	0.86	620	2.7	8.8	3.4	80	95	**1LE5683-3BB3 ■-■■■■**	2010	6.76
400	**355 L**	1490	2550		96	96.2	95.9	0.87	690	2.5	7.7	2.9	80	95	**1LE5683-3BB4 ■-■■■■**	2080	7.06
500	**355 L**	1491	3200		96	96.1	95.8	0.85	880	2.9	8.2	3.2	81	96	**1LE5683-3BB5 ■-■■■■**	2310	8.36
6-pole: 1000 rpm at 50 Hz																	
200	**315 L**	993	1920		95.8	95.9	95.5	0.83	365	3.1	8.9	3.3	70	85	**1LE5683-3AC7 ■-■■■■**	1500	6.89
250	**315 L**	993	2400		95.8	95.9	95.6	0.81	465	3.4	8.8	3.3	70	84	**1LE5683-3AC8 ■-■■■■**	1630	8
315	**355 L**	994	3050		95.8	95.8	95.1	0.81	590	2.9	8.2	3.2	75	90	**1LE5683-3BC2 ■-■■■■**	2020	11.4
355	**355 L**	994	3400		95.8	96	95.7	0.85	630	2.5	8.2	3.1	75	90	**1LE5683-3BC3 ■-■■■■**	2230	13.4
400	**355 L**	993	3850		95.8	96	95.7	0.84	720	2.7	8	2.9	77	92	**1LE5683-3BC4 ■-■■■■**	2260	13.4

4

Voltages [1]		Version							Order code
50 Hz 400 VΔ/690 VY	60 Hz [1] 460 VΔ	**Standard**	**3**	**4**					–
50 Hz 500 VΔ		Without additional charge	**4**	**0**					–
50 Hz 690 VΔ		With additional charge	**4**	**7**					–
For other voltages [1] and more information, see from page 4/27			■	■					**...**
Types of construction		Version							Order code
Without flange	IM B3	**Standard**			**A**				–
With flange	IM B5	With additional charge			**F**				–
For other types of construction and more information, see from page 4/31					■				**...**
Motor protection		Version							Order code
PTC thermistor with 3 temperature sensors		**Standard**				**B**			–
For other motor protection and more information, see from page 4/34						■			**...**
Terminal box position		Version							Order code
Terminal box base left with terminal box 45° [2]		Without additional charge					**2**		–
Terminal box base right with terminal box 45° [2]		**Standard**					**3**		–
For other terminal box positions and more information, see from page 4/35							■		**...**
Special versions									Order code(s)
Forced-air cooled motors w/o ext. fan/fan cover (IC418)		**1LE5683-....**	■	-	■	■	■	■	**-Z F90+...+...+...**
For options and information, see from page 4/36		**1LE5683-....**	■	-	■	■	■	■	**-Z ...+...+...+...**

[1] Parallel supply lines are required, except in the case of connection to 690 V.
[2] For a power rating of 315 kW, 2-pole, 60 Hz and 315 kW, 4-pole, 50 Hz, a larger terminal box can be used (order code **R50**) due to the magnitude of the current. Order code **R50** alters the motor dimensions.

© Innomotics 2024

Selection and ordering data

Voltages	Article No. supplement			Frame size							Motor version	
	Voltage code 12th and 13th position of the Article No.		Additional identification code with order code and plain text, if required	132	160	180	200	225	250	280		
				1LE55.4 Basic Line							IEC	IE4
1LE5 . . . - . . . . ■- ■ . . .			Order code									
Voltage at 50 Hz or 60 Hz												
50 Hz 230 VΔ/400 VY; 60 Hz 460 VY [6]	2	2	–	□	□	□	□	□	□	□		
50 Hz 400 VΔ/690 VY, 60 Hz 460 VΔ [1]	3	4	–	□	□	□	□	□	□	□		
50 Hz 400 VΔ [4) 6)]	0	4	–	□	□	□	□	□	□	□		
50 Hz 500 VY [6]	2	7	–	○	○	○	○	○	○	○		
50 Hz 500 VΔ	4	0	–	○	○	○	○	○	○	○		
60 Hz 575 VΔ				–	–	–	–	–	–	–		
50 Hz 690 VΔ	4	7	–	✓	✓	✓	✓	✓	✓	✓		
50 Hz 220 VΔ/380 VY; 60 Hz 440 VY [6]	2	1	–	✓	✓	✓	✓	✓	✓	✓		
50 Hz 380 VΔ/660 VY, 60 Hz 440 VΔ [1]	3	3	–	✓	✓	✓	✓	✓	✓	✓		
50 Hz 240 VΔ/415 VY; 60 Hz 480 VY [5]	2	3	–	✓	✓	✓	✓	✓	✓	✓		
50 Hz 415 VΔ, 60 Hz 480 VΔ	3	5	–	✓	✓	✓	✓	✓	✓	✓		
60 Hz 380 VΔ/660 VY [1) 7)]	3	0	–	✓	✓	✓	✓	✓	✓	✓		
60 Hz 400 VΔ/690 VY [1) 7)]	3	1	–	✓	✓	✓	✓	✓	✓	✓		
60 Hz 220 VΔ/380 VY [7]	1	7		✓	✓	✓	✓	✓	✓	✓		
60 Hz 230 VΔ/400 VY [7]	1	8		✓	✓	✓	✓	✓	✓	✓		
Voltage at 60 Hz and required power												
220 VΔ/380 VY; 50 Hz power [6]	9	0	M2A	✓	✓	✓	✓	✓	✓	✓		
220 VΔ/380 VY; 60 Hz power [6) 7)]	9	0	M1A	✓	✓	✓	✓	✓	✓	✓		
380 VΔ/660 VY; 50 Hz power	9	0	M2B	✓	✓	✓	✓	✓	✓	✓		
380 VΔ; 50 Hz power				✓	✓	✓	✓	✓	✓	✓		
380 VΔ/660 VY 60Hz; 60 Hz power [7]	9	0	M1B	✓	✓	✓	✓	✓	✓	✓		
440 VY; 50 Hz power [6]	9	0	M2C	✓	✓	✓	✓	✓	✓	✓		
440 VY; 60 Hz power [6) 7)]	9	0	M1C	✓	✓	✓	✓	✓	✓	✓		
440 VΔ; 50 Hz power	9	0	M2D	✓	✓	✓	✓	✓	✓	✓		
440 VΔ; 60 Hz power [7]	9	0	M1D	✓	✓	✓	✓	✓	✓	✓		
460 VY; 50 Hz power [6]	9	0	M2E	✓	✓	✓	✓	✓	✓	✓		
460 VY; 60 Hz power [6) 7)]	9	0	M1E	✓	✓	✓	✓	✓	○	○		
460 VΔ; 50 Hz power	9	0	M2F	✓	✓	✓	✓	✓	✓	✓		
460 VΔ; 60 Hz power [7]	9	0	M1F	✓	✓	✓	✓	✓	○	○		
575 VY; 50 Hz power [6]	9	0	M2G	✓	✓	✓	✓	✓	✓	✓		
575 VY; 60 Hz power [6) 7)]	9	0	M1G	✓	✓	✓	✓	✓	✓	✓		
575 VΔ; 50 Hz power	9	0	M2H	✓	✓	✓	✓	✓	✓	✓		
575 VΔ; 60 Hz power [7]	9	0	M1H	✓	✓	✓	✓	✓	✓	✓		
400 VΔ/690 VY; 50 Hz power	9	0	M2J	✓	✓	✓	✓	✓	✓	✓		
400 VΔ; 50 Hz power				✓	✓	✓	✓	✓	✓	✓		
400 VΔ/690 VY; 60 Hz power [7]	9	0	M1J	✓	✓	✓	✓	✓	✓	✓		
480 VY; 50 Hz power [6]	9	0	M2K	✓	✓	✓	✓	✓	✓	✓		
480 VY; 60 Hz power [6) 7)]	9	0	M1K	✓	✓	✓	✓	✓	✓	✓		
480 VΔ; 50 Hz power	9	0	M2L	✓	✓	✓	✓	✓	✓	✓		
480 VΔ; 60 Hz power [7]	9	0	M1L	✓	✓	✓	✓	✓	✓	✓		
230 VΔ/400 VY; 50 Hz power [6]	9	0	M2M	✓	✓	✓	✓	✓	✓	✓		
230 VΔ/400 VY; 60 Hz power [6) 7)]	9	0	M1M	✓	✓	✓	✓	✓	✓	✓		

For legends and footnotes, see page 4/30.

© Innomotics 2024

Innomotics SD standard motors next generation

Cast-iron series Innomotics SD 1LE55, 1LE56

Voltages	Article No. supplement			Frame size							Motor version	
	Voltage code 12th and 13th position of the Article No.		Additional identification code with order code and plain text, if required	132	160	180	200	225	250	280		
				1LE55.4 Basic Line							IEC	IE4
1LE5 . . . - . . . . ■ - ■ . . .			Order code									
Voltage at 87 Hz and 87-Hz-power												
400 VΔ [6]	**9**	**0**	**M3A**	✓	✓	✓	✓	✓	✓	✓	Not for:	frame size 280 2-pole motors
Non-standard voltage and/or frequencies												
Non-standard winding [2] [3]	**9**	**0**	**M1Y •** and customer specifications	✓	✓	✓	✓	✓	✓	✓		

4

For legends and footnotes, see page 4/30.

© Innomotics 2024

Selection and ordering data

Voltages	Article No. supplement: Voltage code 12th and 13th position of the Article No.		Article No. supplement: Additional identification code with order code and plain text, if required	Frame size 315	355	400				450			Motor version	
				1LE55.4 Basic Line		1LE5534 -4AA3 - 4AA5	-4AB3 -4AB5 -4AC3 -4AC5 -4AC7 -4AD3 -4AD5 -4AD7	-4AA7	-4AB7	-4BA3 -4BA5 -4BA7	-4BB3 -4BB5 -4BB7 -4BC5 -4BC7	-4BC3 -4BD3 -4BD5 -4BD7	IEC	IE4
				1LE56.4 Performance Line										
				1LE55.3 Basic Line		1LE55.3 -4AA3 - 4AA5	-4AB3 -4AB5 -4AC3 -4AC5 -4AC7 -4AD3 -4AD5 -4AD7	-4AA7	-4AB7	-4BA3 -4BA5 -4BA7	-4BB3 -4BB5 -4BB7 -4BC5 -4BC7	-4BC3 -4BD3 -4BD5 -4BD7		IE3
1LE5 . . . - . . . . ■ - ■ . . .			Order code	1LE56.3 Performance Line										
Voltage at 50 Hz or 60 Hz														
50 Hz 230 VΔ/400 VY; 60 Hz 460 VY [6]	2	2	–	☐	–	–	–	–	–	–	–	–		
50 Hz 400 VΔ/690 VY, 60 Hz 460 VΔ [1]	3	4	–	☐	☐	☐	☐	O. R.	O. R.	O. R.	O. R.	☐		
50 Hz 400 VΔ [4] [6]	0	4	–	–	–	–	–	–	–	–	–	–		
50 Hz 500 VY [6]	2	7	–	○	–	–	–	–	–	–	–	–		
50 Hz 500 VΔ	4	0	–	○	○	○	○	○	○	○	○	○		
60 Hz 575 VΔ				–	–	○	○	☐	☐	O. R.	☐	○		
50 Hz 690 VΔ	4	7	–	✓	✓	○	○	☐	☐	☐	☐	○		
50 Hz 220 VΔ/380 VY; 60 Hz 440 VY [6]	2	1	–	O. R.	–	–	–	–	–	–	–	–		
50 Hz 380 VΔ/660 VY, 60 Hz 440 VΔ [1]	3	3	–	✓	✓	O. R.	✓	O. R.	O. R.	O. R.	O. R.	✓		
50 Hz 240 VΔ/415 VY; 60 Hz 480 VY [5]	2	3	–	✓	–	–	–	–	–	–	–	–		
50 Hz 415 VΔ, 60 Hz 480 VΔ	3	5	–	✓	✓	O. R.	✓	O. R.	O. R.	O. R.	O. R.	✓		
60 Hz 380 VΔ/660 VY [1]	3	0	–	✓	✓	–	–	–	–	–	–	–	Not for:	frame size 355 1LE55..-3BA5 and 3BB5
60 Hz 400 VΔ/690 VY [1]	3	1	–	✓	✓	–	–	–	–	–	–	–	Not for:	frame size 355 1LE55..-3BA5 and 3BB5
60 Hz 220 VΔ/380 VY	1	7		O. R.	–	–	–	–	–	–	–	–		
60 Hz 230 VΔ/400 VY	1	8		O. R.	–	–	–	–	–	–	–	–		
Voltage at 60 Hz and required power														
220 VΔ/380 VY; 50 Hz power [6]	9	0	M2A	O. R.	–	–	–	–	–	–	–	–		
220 VΔ/380 VY; 60 Hz power [6]	9	0	M1A	O. R.	–	–	–	–	–	–	–	–		
380 VΔ/660 VY; 50 Hz power	9	0	M2B	✓	✓	–	–	–	–	–	–	–	Not for:	frame size 355 1LE55..-3BA5 and 3BB5
380 VΔ; 50 Hz power				✓	✓	–	–	–	–	–	–	–		
380 VΔ/660 VY 60Hz; 60 Hz power	9	0	M1B	✓	–	–	–	–	–	–	–	–	Not for:	frame size 355 1LE55..-3BA5 and 3BB5
440 VY; 50 Hz power [6]	9	0	M2C	O. R.	–	–	–	–	–	–	–	–		
440 VY; 60 Hz power [6]	9	0	M1C	O. R.	–	–	–	–	–	–	–	–		
440 VΔ; 50 Hz power	9	0	M2D	✓	✓	✓	✓	O. R.	O. R.	O. R.	O. R.	✓		
440 VΔ; 60 Hz power	9	0	M1D	✓	–	✓	✓	O. R.	O. R.	O. R.	O. R.	✓		
460 VY; 50 Hz power [6]	9	0	M2E	✓	–	–	–	–	–	–	–	–		
460 VY; 60 Hz power [6]	9	0	M1E	○	–	–	–	–	–	–	–	–		
460 VΔ; 50 Hz power	9	0	M2F	✓	✓	✓	✓	O. R.	O. R.	O. R.	O. R.	✓		
460 VΔ; 60 Hz power	9	0	M1F	○	–	✓	✓	O. R.	O. R.	O. R.	O. R.	✓		
575 VY; 50 Hz power [6]	9	0	M2G	✓	–	–	–	–	–	–	–	–		
575 VY; 60 Hz power [6]	9	0	M1G	✓	–	–	–	–	–	–	–	–		

For legends and footnotes, see page 4/30.

© Innomotics 2024

Innomotics SD standard motors next generation

Cast-iron series Innomotics SD 1LE55, 1LE56

Voltages	Article No. supplement: Voltage code 12th and 13th position of the Article No.		Article No. supplement: Additional identification code with order code and plain text, if required	Frame size 315	355	400				450			Motor version	
				1LE55.4 Basic Line		1LE5534							IEC	IE4
						-4AA3 - 4AA5	-4AB3 -4AB5 -4AC3 -4AC5 -4AC7 -4AD3 -4AD5 -4AD7	-4AA7	-4AB7	-4BA3 -4BA5 -4BA7	-4BB3 -4BB5 -4BB7 -4BC5 -4BC7	-4BC3 -4BD3 -4BD5 -4BD7		
				1LE56.4 Performance Line										
				1LE55.3 Basic Line		1LE55.3 -4AA3 - 4AA5	-4AB3 -4AB5 -4AC3 -4AC5 -4AC7 -4AD3 -4AD5 -4AD7	-4AA7	-4AB7	-4BA3 -4BA5 -4BA7	-4BB3 -4BB5 -4BB7 -4BC5 -4BC7	-4BC3 -4BD3 -4BD5 -4BD7		IE3
1LE5 . . . -	■	■ . . .	Order code	1LE56.3 Performance Line										
Voltage at 60 Hz and required power (continued)														
575 VΔ; 50 Hz power	9	0	M2H	✓	✓	✓	✓	✓	✓	O. R.	✓	✓		
575 VΔ; 60 Hz power	9	0	M1H	✓	–	✓	✓	✓	✓	O. R.	✓	✓		
400 VΔ/690 VY; 50 Hz power	9	0	M2J	✓	✓	O. R.	✓	O. R.	O. R.	O. R.	O. R.	✓	Not for:	frame size 355 1LE55..-3BA5 and 3BB5
400 VΔ; 50 Hz power				✓	✓	–	–	–	–	–	–	–		
400 VΔ/690 VY; 60 Hz power	9	0	M1J	✓	–	O. R.	✓	O. R.	O. R.	O. R.	O. R.	✓	Not for:	frame size 355 1LE55..-3BA5 and 3BB5
480 VY; 50 Hz power [6]	9	0	M2K	✓	–	–	–	–	–	–	–	–		
480 VY; 60 Hz power [6]	9	0	M1K	✓	–	–	–	–	–	–	–	–		
480 VΔ; 50 Hz power	9	0	M2L	✓	✓	✓	✓	O. R.	O. R.	O. R.	O. R.	✓		
480 VΔ; 60 Hz power	9	0	M1L	✓	–	✓	✓	O. R.	O. R.	O. R.	O. R.	✓		
230 VΔ/400 VY; 50 Hz power [6]	9	0	M2M	O. R.	–	–	–	–	–	–	–	–		
230 VΔ/400 VY; 60 Hz power [6]	9	0	M1M	O. R.	–	–	–	–	–	–	–	–		
Voltage at 87 Hz and 87-Hz-power														
400 VΔ [6]	9	0	M3A	✓	✓	–	–	–	–	–	–	–	Not for:	frame size 280 2-pole motors
Non-standard voltage and/or frequencies														
Non-standard winding [2] [3]	9	0	M1Y • and customer specifications	✓	✓	✓	✓	✓	✓	✓	✓	✓		

☐ Standard version
O Without additional charge
• This order code only determines the price of the version – Additional plain text is required.
O. R. Possible on request
✓ With additional charge

1) Without additional measures not possible for converter operation at 690 VY and 660 VΔ (valid for 1LE5504, 1LE5604, 1LE5534, 1LE5634, 1LE5503, 1LE5603, 1LE5533 and 1LE5633).
2) Plain text must be specified in the order: Voltage between 200 and 690 V (voltages outside the range are available on request), frequency, circuit, rated power.
3) 2-pole version, frame size 450 for 60 Hz operation on request.
4) Possible up to 160 kW, over 200 kW not possible
5) Not for frame size 315 and 355, 11th position of Article No. 0, 2, 4, 5 (2- ... 8-pole) 6 (6- and 8-pole)
6) Not for frame size 315 and 355, 11th position of Article No. 6, 7 (2- and 4-pole motors) 7, 8 (6- and 8-pole motors)
7) Not for frame size 280, 11th position of Article No. 0, 2, 6 (2- and 4-pole motors) 7, 8 (6- and 8-pole motors)

© Innomotics 2024

Selection and ordering data

Types of construction	Article No. supplement: Type of construction code letter 14th position of the Article No.	Article No. supplement: For types of construction with order code(s) Article No. with additional identification code -Z	Frame size 132	160	180	200	225	250	280	315	355	400	450	Motor version	
			1LE55.4 Basic Line									1LE5534		IEC	IE4
								1LE56.4 Performance Line							
								1LE55.3 Basic Line				1LE55.3			IE3
								1LE56.3 Performance Line							
1LE5 . . . - . . . . . - . ■	. . (-Z)	Order code													
Without flange															
IM B3 [1) 2)]	**A**	**–**	□	□	□	□	□	□	□	□	□	□	□		
IM B6 [2)] 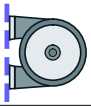	**T**	**–**	○	○	○	○	○	○	○	○	○	–	–		
IM B7 [2)] 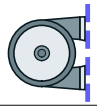	**U**	**–**	○	○	○	○	○	○	○	○	○	–	–		
IM B8 [2)]	**V**	**–**	○	○	○	○	○	○	○	○	○	–	–		
IM V6 [2)] 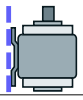	**D**	**–**	○	○	○	○	○	○	○	○	○	O. R. [7)]	O. R. [7)]		
IM V5 without protective cover [2)] 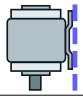	**C**	**–**	○	○	○	○	○	○	○	○	○	O. R. [7)]	O. R. [7)]		
IM V5 with protective cover [2) 3) 4)]	**C**	**H00**	✓	✓	✓	✓	✓	✓	✓	✓	✓	O. R. [7)]	O. R. [7)]		

For legends and footnotes, see page 4/33.

© Innomotics 2024

Innomotics SD standard motors next generation

Cast-iron series Innomotics SD 1LE55, 1LE56

Frame size	132	160	180	200	225	250	280	315	355	400	450	Motor version	
1LE55.4 Basic Line										1LE5534		IEC	IE4
1LE56.4 Performance Line													
1LE55.3 Basic Line										1LE55.3			IE3
1LE56.3 Performance Line													

Types of construction	Article No. supplement: Type of construction code letter 14th position of the Article No.	Article No. supplement: For types of construction with order code(s) Article No. with additional identification code -Z													
1LE5 . . . - . . . . . - . ■ . . (-Z)		Order code													
With flange	**EN 50347** / **DIN 42948**		**FF265** / **A 300**	**FF300** / **A 350**	**FF300** / **A 350**	**FF350** / **A 400**	**FF400** / **A 450**	**FF500** / **A 550**	**FF500** / **A 550**	**FF600/ FF740** / **A 660/ A 800**	**FF840 8)**	**FF940**	**FF1080**		
IM B5 2) 5) 6) 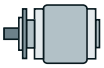	**F**		–	✓	✓	✓	✓	✓	✓	✓	✓	✓	✓	✓	Only for FF600: frame size 315, 11th position of Article No. 0, 2, 4, 5 (2-, 4-, 6- and 8-pole motors) 6 (6- and 8-pole motors)
IM V1 without protective cover 2) 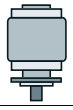	**G**		–	✓	✓	✓	✓	✓	✓	✓	✓	✓ 7)	✓ 7)		
IM V1 with protective cover 2) 3) 4)	**G**		**H00**	✓	✓	✓	✓	✓	✓	✓	✓	✓ 7)	✓ 7)	Only for FF740: frame size 315, 11th position of Article No. 6, 7 (2- and 4-pole motors) 7, 8 (6- and 8-pole motors)
IM V3 4)	**H**		–	✓	✓	✓	✓	✓	✓	✓	✓	–	–		
IM B35 3) 8) 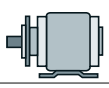	**J**		–	✓	✓	✓	✓	✓	✓	✓	✓	✓	✓		
IM V15 without protective cover 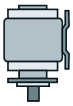	**W**			✓	✓	✓	✓	✓	✓	✓	✓	–	–	–	
IM V15 with protective cover 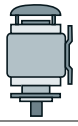	**W**		**H00**	✓	✓	✓	✓	✓	✓	✓	✓	–	–	–	
IM V35	**Y**			✓	✓	✓	✓	✓	✓	✓	✓	–	–	–	

For legends and footnotes, see page 4/33.

© Innomotics 2024

Innomotics SD standard motors next generation

Cast-iron series Innomotics SD 1LE55, 1LE56

Types of construction	Article No. supplement: Type of construction code letter 14th position of the Article No.	Article No. supplement: For types of construction with order code(s) Article No. with additional identification code -Z	Frame size 132	160	180	200	225	250	280	315	355	400	450	Motor version	
			1LE55.4 Basic Line									1LE5534		IEC	IE4
							1LE56.4 Performance Line								
							1LE55.3 Basic Line					1LE55.3			IE3
							1LE56.3 Performance Line								
1LE5 . . . - . . . . . - .	■ . . (-Z)	Order code													
With flange next larges	**EN 50347 DIN 42948**		**FF300 A 350**	**FF350 A 350**	**FF350 A 400**	**FF400 A 450**	**FF500 A 550**		**FF600 A 660**	**FF740 A 800**					
IM B5 [2) 6)] 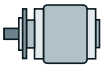	**F**	**P01**	✓	✓	✓	✓	✓	–	O. R.	✓	–	–	–	Only for:	frame size 315, 11th position of Article No. 0, 2, 4, 5 (2-, 4-, 6- and 8-pole motors) 6 (6- and 8-pole motors)
IM V1 without protective cover [2)] 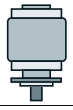	**G**	**P01**	✓	✓	✓	✓	✓	–	O. R.	✓	–	–	–		
IM V1 with protective cover [2) 4) 5)]	**G**	**P01+H00**	✓	✓	✓	✓	✓	–	O. R.	✓	–	–	–		
IM V3 [5)]	**H**	**P01**	✓	✓	✓	✓	✓	–	O. R.	✓	–	–	–		
IM B35 [3)] 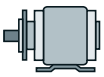	**J**	**P01**	✓	✓	✓	✓	✓	–	O. R.	✓	–	–	–		
With flange next smallest	**EN 50347 DIN 42948**		**FF215 A 250**	**FF265 A 300**			**FF300 A 350**		**FF400 A 450**	**FF500/ FF600 A 550/ A 660**					
IM B5 [2) 6)] 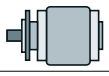	**F**	**P02**	✓	✓	✓	✓	✓	–	O. R.	✓	–	–	–	Only for FF500:	frame size 315, 11th position of Article No. 0, 2, 4, 5 (2-, 4-, 6- and 8-pole motors) 6 (6- and 8-pole motors)
IM V1 without protective cover [2)] 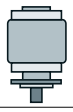	**G**	**P02**	✓	✓	✓	✓	✓	–	O. R.	✓	–	–	–		
IM V1 with protective cover [2) 4) 5)]	**G**	**P02+H00**	✓	✓	✓	✓	✓	–	O. R.	✓	–	–	–	Only for FF600:	frame size 315, 11th position of Article No. 6, 7 (2- and 4-pole motors) 7, 8 (6- and 8-pole motors)
IM V3 [5)]	**H**	**P02**	✓	✓	✓	✓	✓	–	O. R.	✓	–	–	–	Only for FF400:	max. speed 3000 rpm
IM B35 [3)] 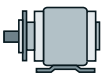	**J**	**P02**	✓	✓	✓	✓	✓	–	O. R.	✓	–	–	–		

☐ Standard version
O Without additional charge
✓ With additional charge

1) The types of construction IM B6/7/8, IM V6 and IM V5 with/without protective cover are also possible as long as no stamping of these types of construction on the rating plate is required. As standard the type of construction IM B3 is then stamped on the rating plate. With type of construction IM V5 with protective cover, the protective cover has to be additionally ordered with order code **H00**. The protective cover is not stamped on the rating plate.

2) The type of construction is stamped on the rating plate. If mounted in a different position, the position must be specified to ensure that the condensation drainage holes are positioned correctly.

3) In combination with an encoder, it is not necessary to order the protective cover (order code **H00**), as this is delivered as a protection for the encoder as standard. In this case the protective cover is standard design (without additional charge).

4) The "Standard cylindrical shaft extension (second shaft extension)" option (order code **L05**) is not possible.

5) The types of construction IM V3 and IM V1 with/without protective cover are also possible as long as no stamping of these types of construction on the rating plate is required. As standard the type of construction IM B5 is then stamped on the rating plate. With type of construction IM V1 with protective cover, the protective cover has to be additionally ordered with order code **H00**. The protective cover is not stamped on the rating plate.

6) For machines, type of construction IM B5, provide an additional support foot at the NDE. The support foot is not included in the scope of supply. Use an appropriately sized support foot with the appropriate rigidity. The support foot must be able to support the total weight of the machine.

7) Not possible for 2-pole 1LE55..-4BA motors.

8) Motor installation only permitted as foot mounting. Flange must not be used as a motor supporting element.

© Innomotics 2024

Innomotics SD standard motors next generation

Cast-iron series Innomotics SD 1LE55, 1LE56

Selection and ordering data

Motor protection	Article No. supplement: Motor protection code letter 15th position of the Article No.	Article No. supplement: Additional identification code with order code and plain text, if required	Frame size 132	160	180	200	225	250	280	315	355	400	450	Motor version	
			1LE55.4 Basic Line									1LE5534		IEC	IE4
			1LE56.4 Performance Line												
			1LE55.3 Basic Line									1LE55.3			IE3
			1LE56.3 Performance Line												
1LE5 . . . - . . . . . - . .	■ .	Order code													
Motor protection															
Without (standard) [1]	**A**	**–**	☐	☐	☐	☐	☐	☐	☐	☐	☐	☐	☐	Only for:	1LE55.4, 1LE55.3
1 or 3 PTC thermistors – for tripping (2 terminals) [1] [2]	**B**	**Q11**	✓	✓	✓	✓	✓	✓	✓	✓	–	✓	✓	Only for:	1LE55.4, 1LE55.3
			–	–	–	–	–	–	–	☐	☐	–	–	Only for:	1LE56.4, 1 LE56.3
2 or 6 PTC thermistors – for alarm and tripping (4 terminals) [2]	**C**	**Q12**	✓	✓	✓	✓	✓	✓	✓	✓	✓	✓	✓		
3 Pt100 resistance thermometers (6 terminals)	**H**	**Q60**	✓	✓	✓	✓	✓	✓	✓	✓	✓	✓	✓		
6 Pt100 resistance thermometers (12 terminals)	**J**	**Q61**	✓	✓	✓	✓	✓	✓	✓	✓	✓	✓	✓		
1 Pt1000 resistance thermometer (2 terminals) [2]	**K**	**Q35**	✓	✓	✓	✓	✓	✓	✓	✓	✓	✓	✓		
2 Pt1000 resistance thermometers (4 terminals) [2]	**L**	**Q36**	✓	✓	✓	✓	✓	✓	✓	✓	✓	✓	✓		
1 Pt100 resistance thermometer (2 terminals) [2]	**P**	**Q62**	✓	✓	✓	✓	✓	✓	✓	✓	✓	✓	✓		
3 Pt100 resistance thermometers (9 terminals) [2]	**Q**	**Q63**	✓	✓	✓	✓	✓	✓	✓	✓	✓	✓	✓		
6 Pt100 resistance thermometers (18 terminals) [2]	**R**	**Q64**	✓	✓	✓	✓	✓	✓	✓	✓	✓	✓	✓		
3 bimetal sensors (NC contacts) for tripping (2 terminals) [2]	**Z**	**Q3A**	✓	✓	✓	✓	✓	✓	✓	✓	✓	✓	✓		
6 bimetal sensors (NC contacts) for alarm and tripping (4 terminals) [2]	**Z**	**Q9A**	✓	✓	✓	✓	✓	✓	✓	✓	✓	✓	✓		

☐ Standard version
✓ With additional charge

Note:
Options are available specifically for bearing protection – for order codes and descriptions, see from page 4/36.

[1] For the Performance Line, motor protection by means of PTC thermistors with 3 built-in temperature sensors for tripping (motor protection code letter B) is already included in the basic price. For the Performance Line, the option "without motor protection" (motor protection code A) is not possible.
[2] Evaluation with associated tripping unit (see Catalog IC 10) is recommended.

© Innomotics 2024

Selection and ordering data

Terminal box position	Article No. supplement: Terminal box position code 16th position of the Article No.	Article No. supplement: Additional identification code with order code and plain text, if required	Frame size 132	160	180	200	225	250	280	315	355	400	450	Motor version	
			1LE55.4 Basic Line									1LE5534		IEC	IE4
						1LE56.4 Performance Line									
							1LE55.3 Basic Line					1LE55.3			IE3
						1LE56.3 Performance Line									
1LE5 . . . - . . . . . - . . . ■		Order code													
Terminal box position [1]															
Terminal box base left with terminal box at the top	**0**	**–**	–	–	–	–	–	–	–	✓	✓	✓	✓	Only for:	frame size 315, 11th position of Article No. 6, 7 (2- and 4-pole motors) 7, 8 (6- and 8-pole motors) and for frame size 355 to 450
Terminal box base right with terminal box at the top	**1**	**–**	–	–	–	–	–	–	–	✓	✓	✓	✓		
Terminal box base left with oblique terminal box 45°	**2**	**–**	–	–	–	–	–	–	–	○	○	○	○		
Terminal box base right with oblique terminal box 45°	**3**	**–**	–	–	–	–	–	–	–	□	□	□	□		
Terminal box top	**4**	**–**	□	□	□	□	□	□	□	□	–	–	–	Only for:	frame size 315, 11th position of Article No. 0, 2, 4, 5 (2- ... 8-pole) 6 (6- and 8-pole)
Terminal box right-hand side	**5**	**–**	✓	✓	✓	✓	✓	✓	✓	✓	✓	✓	✓		
Terminal box left-hand side	**6**	**–**	✓	✓	✓	✓	✓	✓	✓	✓	✓	✓	✓		
Terminal box bottom [2]	**7**	**–**	✓	✓	✓	✓	✓	✓	✓	✓	–	–	–	Only for:	frame size 315, 11th position of Article No. 0, 2, 4, 5 (2- ... 8-pole) 6 (6- and 8-pole)
Terminal box left-hand side (base below) [2]	**9**	**R5L**	–	–	–	–	–	–	–	✓	✓	✓	✓	Only for:	frame size 315, 11th position of Article No. 6, 7 (2- and 4-pole motors) 7, 8 (6- and 8-pole motors) and for frame size 355 to 450
Terminal box right-hand side (base below) [2]	**9**	**R6R**	–	–	–	–	–	–	–	✓	✓	✓	✓		
Terminal box bottom left [2] [3]	**9**	**R7L**	–	–	–	–	–	–	–	✓	✓	✓	✓		
Terminal box bottom right [2] [3]	**9**	**R7R**	–	–	–	–	–	–	–	✓	✓	✓	✓		

□ Standard version
○ Without additional charge
✓ With additional charge

Note:
On the motors
1LE5583-4AA3, 1LE5583-4AA5,
1LE5583-4BA3, 1LE5583-4BA5, 1LE5583-4BA7,
1LE5583-4AC7, 1LE5583-4BC3,
1LE5583-4BD7,
terminal box type 1XB1631 is mounted.

[1] For types of construction with feet and flange-mounted with feet, cast feet are standard.
[2] Only possible in combination with type of construction IM B5.
[3] Only possible for Frame sizes 400 and 450 in combination with IM V1 type of construction.

© Innomotics 2024

Innomotics SD standard motors next generation

Cast-iron series Innomotics SD 1LE55, 1LE56

Selection and ordering data

Special versions	Additional identification code **-Z** with order code and plain text if required	Frame size											Motor version	
		132	**160**	**180**	**200**	**225**	**250**	**280**	**315**	**355**	**400**	**450**		
		1LE55.4 Basic Line									**1LE5534**		IEC	IE4
							1LE56.4 Performance Line							
							1LE55.3 Basic Line				**1LE55.3**			IE3
							1LE56.3 Performance Line							
1LE5 . . . - . . . . . - . . . . -Z	Order code													
Motor protection														
1 or 3 PTC thermistors – for tripping (2 terminals)	**Q11**	✓	✓	✓	✓	✓	✓	✓	✓	✓	✓	✓	Not for:	Combination with motor protection code letter B (15th position of the Article No.)
2 or 6 PTC thermistors – for alarm and tripping (4 terminals)	**Q12**	✓	✓	✓	✓	✓	✓	✓	✓	✓	✓	✓	Not for:	Combination with motor protection code letter C (15th position of the Article No.)
3 bimetal sensors (NC contacts) for tripping (2 terminals)	**Q31**	✓	✓	✓	✓	✓	✓	✓	✓	✓	✓	✓		
6 bimetal sensors (NC contacts) for alarm and tripping (4 terminals)	**Q32**	✓	✓	✓	✓	✓	✓	✓	✓	✓	✓	✓		
3 bimetal sensors (NC contacts) for tripping (6 terminals)	**Q33**	✓	✓	✓	✓	✓	✓	✓	✓	✓	✓	✓		
6 bimetal sensors (NC contacts) for alarm and tripping (12 terminals)	**Q34**	–	–	–	–	–	–	–	✓	✓	✓	✓		
1 Pt1000 resistance thermometer (2 terminals)	**Q35**	✓	✓	✓	✓	✓	✓	✓	✓	✓	✓	✓		
2 Pt1000 resistance thermometers (4 terminals)	**Q36**	✓	✓	✓	✓	✓	✓	✓	✓	✓	✓	✓		
3 Pt100 resistance thermometers (6 terminals)	**Q60**	✓	✓	✓	✓	✓	✓	✓	✓	✓	✓	✓	Not for:	Combination with motor protection code letter H (15th position of the Article No.)
6 Pt100 resistance thermometers (12 terminals)	**Q61**	✓	✓	✓	✓	✓	✓	✓	✓	✓	✓	✓	Not for:	Combination with motor protection code letter J (15th position of the Article No.)
1 Pt100 resistance thermometer 2-wire input (2 terminals)	**Q62**	✓	✓	✓	✓	✓	✓	✓	✓	✓	✓	✓		
3 Pt100 resistance thermometers (9 terminals)	**Q63**	✓	✓	✓	✓	✓	✓	✓	✓	✓	✓	✓		
6 Pt100 resistance thermometers (18 terminals)	**Q64**	✓	✓	✓	✓	✓	✓	✓	✓	✓	✓	✓		
2 Pt100 resistance thermometers in basic configuration for bearings (4 terminals)	**Q72**	✓	✓	✓	✓	✓	✓	✓	✓	✓	✓	✓		
2 Pt100 resistance thermometers input for bearings (6 terminals)	**Q78**	✓	✓	✓	✓	✓	✓	✓	✓	✓	✓	✓		
2 Pt100 double resistance thermometers in 3-wire input for bearings (12 terminals)	**Q79**	✓	✓	✓	✓	✓	✓	✓	✓	✓	✓	✓		
Motor connection and terminal box														
External grounding		☐	☐	☐	☐	☐	☐	☐	☐	☐	☐	☐		
Terminal box at NDE	**H08**	✓	✓	✓	✓	✓	✓	✓	✓	✓	✓	✓		
Two terminal boxes at NDE	**H09**	–	–	–	–	–	–	–	–	–	✓	✓		
Second external grounding	**H70**	✓	✓	✓	✓	✓	✓	✓	✓	✓	✓	✓		
Connected in star for dispatch	**M01**	✓	✓	✓	✓	✓	✓	✓	✓	✓	✓	O.R.		
Connected in delta for dispatch	**M02**	✓	✓	✓	✓	✓	✓	✓	✓	✓	✓	O.R.		
Subsequently rotatable main terminal box	**R09**	–	–	–	–	–	–	–	–	–	✓	✓		
Rotation of the terminal box through 90°, entry from DE	**R10**	✓	✓	✓	✓	✓	✓	✓	✓	✓	✓	✓	Not for:	Combination with type of construction code letters F, G, H, J (14th position of the Article No.)
Rotation of the terminal box through 90°, entry from NDE	**R11**	✓	✓	✓	✓	✓	✓	✓	✓	✓	✓	✓		
Rotation of the terminal box through 180°	**R12**	✓	✓	✓	✓	✓	✓	✓	✓	✓	✓	✓		
Terminal box in position 0°, connection from right		☐	☐	☐	☐	☐	☐	☐	–	–	–	–		
One EMC cable gland	**R14**	✓	✓	✓	✓	✓	✓	✓	✓	✓	–	–		
One metal cable gland	**R15**	✓	✓	✓	✓	✓	✓	✓	✓	✓	–	–		
EMC cable gland, maximum configuration	**R16**	✓	✓	✓	✓	✓	✓	✓	✓	✓	✓	✓		
Stud terminal for cable connection, accessories pack (3 items)	**R17**	–	–	–	–	–	✓	✓	✓	✓	–	–		

For legends, see page 4/42.

© Innomotics 2024

Special versions	Additional identification code -Z with order code and plain text if required	Frame size 132	160	180	200	225	250	280	315	355	400	450	Motor version	
		1LE55.4 Basic Line									1LE5534		IEC	IE4
		1LE56.4 Performance Line												
		1LE55.3 Basic Line									1LE55.3			IE3
		1LE56.3 Performance Line												
1LE5 . . . - . . . . . - . . . . -Z	Order code													
Motor connection and terminal box (continued)														
Metal cable gland, maximum configuration	**R18**	✓	✓	✓	✓	✓	✓	✓	✓	✓	✓	✓		
Saddle terminal for connection without cable lug, accessories pack	**R19**	–	–	✓	✓	✓	✓	✓	✓	✓	✓	✓		
3 cables protruding, 1.5 m long	**R21**	✓	✓	O. R.	O. R.	O. R.	O. R.	O. R.	O. R.	O. R.	O. R.	O. R.		
6 cables protruding, 1.5 m long	**R23**	✓	✓	O. R.	O. R.	O. R.	O. R.	O. R.	O. R.	O. R.	O. R.	O. R.		
6 cables protruding, 3 m long	**R24**	✓	✓	O. R.	O. R.	O. R.	O. R.	O. R.	O. R.	O. R.	O. R.	O. R.		
Larger terminal box	**R50**	✓	✓	✓	✓	✓	✓	✓	✓	–	✓	✓		
Terminal box without cable entry opening	**R51**	O	O	O	O	✓	O	O	O	O	O	O		
Drilled removable entry plate	**R52**	–	–	✓	✓	✓	✓	✓	✓	✓	☐	☐		
Undrilled removable entry plate	**R53**	–	–	✓	✓	✓	✓	✓	✓	✓	O	O		
Cast-iron auxiliary terminal box (small)	**R62**	✓	✓	✓	✓	✓	✓	✓	✓	✓	✓	✓		
Cast-iron auxiliary terminal box (large)	**R63**	–	–	✓	✓	✓	✓	✓	✓	✓	✓	✓		
Stainless steel auxiliary terminal box (large)	**R65**	–	–	–	–	–	–	–	–	–	✓	✓		
2 small cast-iron auxiliary terminal boxes	**R67**	✓	✓–	✓	✓	✓	✓	✓	✓	✓	–	–		
Version with reduced silicon amount according to VDMA 24364-C1/T70	**R77**	✓	✓	✓	✓	✓	✓	✓	✓	O. R.,	✓	✓		
Non-standard threaded through hole (metric, NPT or G thread)	**Y61 •** and customer specifications	✓	✓	✓	✓	✓	✓	✓	✓	✓	✓	✓		
Windings and insulation														
Temperature class 155 (F), utilized acc. to 155 (F), with service factor	**N01**	✓	✓	✓	✓	✓	✓	✓	✓	✓	☐	☐	Not for:	1LE5583, 1LE5683 (frame sizes 315 and 355)
Temperature class 155 (F), utilized acc. to 155 (F), with increased power	**N02**	–	–	–	–	✓	✓	✓	✓	✓	✓	✓	Not for:	1LE5583, 1LE5683 (frame sizes 315 and 355)
Temperature class 155 (F), utilized acc. to 155 (F), with increased coolant temperature	**N03**	✓	✓	✓	✓	✓	✓	✓	✓	✓	✓	✓	Not for:	1LE5583, 1LE5683 (frame sizes 315 and 355)
Temperature class 155 (F), used acc. to 130 (B), coolant temperature 45 °C, derating approx. 4 %	**N05**	✓	✓	✓	✓	✓	✓	✓	✓	✓	✓	✓		
Temperature class 155 (F), used acc. to 130 (B), coolant temperature 50 °C, derating approx. 8 %	**N06**	✓	✓	✓	✓	✓	✓	✓	✓	✓	✓	✓		
Temperature class 155 (F), used acc. to 130 (B), coolant temperature 55 °C, derating approx. 13 %	**N07**	✓	✓	✓	✓	✓	✓	✓	✓	✓	✓	✓		
Temperature class 155 (F), used acc. to 130 (B), coolant temperature 60 °C, derating approx. 18 %	**N08**	✓	✓	✓	✓	✓	✓	✓	✓	✓	✓	✓		
Temperature class 180 (H)	**N10**	✓	✓	✓	✓	✓	✓	✓	✓	✓	✓	✓		
Temperature class 180 (H) at rated power and max. CT 60 °C	**N11**	✓	✓	✓	✓	✓	✓	✓	✓	✓	O. R.	O. R.		
Increased air humidity/temperature with 30 to 60 g water per m^3 of air	**N30**	✓	✓	✓	✓	✓	✓	✓	✓	✓	✓	✓		
Increased air humidity/temperature with 60 to 100 g water per m^3 of air	**N31**	✓	✓	✓	✓	✓	✓	✓	✓	✓	✓	✓		
Temperature class 155 (F), utilized acc. to 130 (B), with higher coolant temperature and/or installation altitude	**Y50 •** CT .. °C or IA .... m above sea level	✓	✓	✓	✓	✓	✓	✓	✓	✓	✓	✓	Not for:	1LE5583, 1LE5683 (frame sizes 280 to 355)
Temperature class 155 (F), utilized acc. to 155 (F), other requirements	**Y52 •** CT .. °C or IA .... m above sea level	✓	✓	✓	✓	✓	✓	✓	✓	✓	✓	✓		
Temperature class 180 (H), utilized acc. to 155 (F)	**Y75 •** CT .. °C or IA .... m above sea level	✓	✓	✓	✓	✓	✓	✓	✓	✓	O. R.	O. R.		
Colors and paint finish														
Standard paint finish C2 in RAL 7030 stone gray		☐	☐	☐	☐	☐	☐	☐	☐	☐	☐	☐	Only for:	Frame sizes 315 and 355 – Basic Line, Add and Pro
Unpainted (only cast-iron parts primed)	**S00**	O	O	O	O	O	O	O	O	O	O	O		
Unpainted, only primed	**S01**	✓	✓	✓	✓	✓	✓	✓	✓	✓	✓	✓		

For legends, see page 4/42.

© Innomotics 2024

Innomotics SD standard motors next generation

Cast-iron series Innomotics SD 1LE55, 1LE56

Special versions	Additional identification code -Z with order code and plain text if required	Frame size 132	160	180	200	225	250	280	315	355	400	450	Motor version	
		1LE55.4 Basic Line									1LE5534		IEC	IE4
		1LE56.4 Performance Line												
		1LE55.3 Basic Line									1LE55.3			IE3
		1LE56.3 Performance Line												
1LE5 . . . - . . . . . - . . . . -Z	Order code													
Colors and paint finish (continued)														
Special paint finish C3	**S02**	✓	✓	✓	✓	✓	✓	✓	✓	–	✓	✓	Only for:	Basic Line
		–	–	–	–	–	–	–	☐	☐	–	–	Only for:	Performance Line
Special paint finish sea air resistant C4	**S03**	✓	✓	✓	✓	✓	✓	✓	✓	✓	✓	✓		
Special paint finish for use offshore C5	**S04**	✓	✓	✓	✓	✓	✓	✓	✓	✓	✓	✓		
Internal coating	**S05**	✓	✓	✓	✓	✓	✓	✓	✓	✓	✓	✓		
Top coat polyurethane	**S06**	✓	✓	✓	✓	✓	✓	✓	✓	✓	☐	☐		
Special paint finish C5mid with medium durability	**S08**	✓	✓	✓	✓	✓	✓	✓	✓	✓	–	–		
Special paint finish CX for offshore with high durability	**S09**	✓	✓	✓	✓	✓	✓	✓	✓	✓	–	–		
Paint finish in other standard RAL colors: RAL 1015, 3000, 5002, 5009, 5010, 5012, 5015, 6011, 7001, 7011, 7016, 7031, 7032, 7035, 7037, 8012, 9005, 9010 (see Catalog Section 1 "Introduction")	**Y53 •** and paint finish RAL....	✓	✓	✓	✓	✓	✓	✓	✓	✓	✓	✓		
Paint finish in special RAL colors: For RAL colors, see "Special paint finish in special RAL colors" (see Catalog Section 1 "Introduction")	**Y56 •** and paint finish RAL....	✓	✓	✓	✓	✓	✓	✓	✓	✓	✓	✓		
Non-standard colors Colors see "Paint finish in non-standard colors (see Catalog Section 1 "Introduction")	**Y66 •** and paint finish	✓	✓	✓	✓	✓	✓	✓	✓	✓	✓	✓		
Modular technology – Basic versions														
Mounting of holding brake (standard assignment)	**F01**	✓	✓	✓	✓	✓	✓	✓	✓	✓	✓	✓	Not for:	2-pole motors
Mounting of PRECIMA brake	**F04**	✓	✓	✓	✓	✓	✓	✓	–	–	–	–		
Mechanical manual brake release with lever (no locking)	**F50**	✓	✓	✓	✓	✓	✓	✓	–	–	–			
Mounting of separately driven fan	**F70**	✓	✓	✓	✓	✓	✓	✓	✓	✓	✓	✓		
Mounting of Kübler Sendix 5020 HTL, 1024 I rotary pulse encoder	**G11**	✓	✓	✓	✓	✓	✓	✓	✓	✓	–	–		
Mounting of Kübler Sendix 5020 TTL, 1024 I rotary pulse encoder	**G12**	✓	✓	✓	✓	✓	✓	✓	✓	O. R.	–	–		
Modular technology – Additional versions														
Brake supply voltage 24 V DC	**F10**	✓	✓	✓	✓	✓	✓	✓	✓	✓	–	–	Not for:	2-pole motors
Brake supply voltage 230 V AC, 50/60 Hz	**F11**	O	O	O	O	O	O	O	O	O	O	O	Not for:	2-pole motors
Brake supply voltage 400 V AC, 50/60 Hz	**F12**	✓	✓	✓	✓	✓	✓	✓	✓	✓	✓	✓	Not for:	2-pole motors
Backstop, counterclockwise motion blocked, clockwise direction of rotation	**F40**	✓	✓	✓	✓	✓	✓	✓	✓	✓	–	–		
Backstop, clockwise motion blocked, counterclockwise direction of rotation	**F41**	✓	✓	✓	✓	✓	✓	✓	✓	✓	–	–		
Special technology														
Mounting of rotary pulse encoder HOG 86E	**G03**	✓	✓	✓	✓	✓	✓	✓	✓	✓	✓	✓		
Mounting of LL 861 900 220 rotary pulse encoder	**G04**	✓	✓	✓	✓	✓	✓	✓	✓	✓	✓	✓		
Mounting of HOG 9 DN 1024 I rotary pulse encoder	**G05**	✓	✓	✓	✓	✓	✓	✓	✓	✓	✓	✓		
Mounting of HOG 10 D 1024 I rotary pulse encoder	**G06**	✓	✓	✓	✓	✓	✓	✓	✓	✓	✓	✓		
Mounting of POG 10 DN rotary pulse encoder (only in combination with separately driven fan or brake)	**G07**	–	–	✓	✓	✓	✓	✓	✓	✓	–	–		
Mounting of POG 9 rotary pulse encoder (only in combination with separately driven fan or brake)	**G08**	–	–	✓	✓	✓	✓	✓	✓	✓	–	–		
Mounting of HOG 10 DN 1024 I rotary pulse encoder, terminal box moisture protection	**G15**	✓	✓	✓	✓	✓	✓	✓	✓	✓	✓	✓		
Mounting of HOG 10 DN 1024 I rotary pulse encoder, terminal box dust protection	**G16**	✓	✓	✓	✓	✓	✓	✓	✓	✓	✓	✓		
Mounting of Kübler Sendix 5834FS2 1024, SIL-2 rotary pulse encoder	**G21**	–	–	–	–	–	–	–	✓	✓	–	–		

For legends, see page 4/42.

© Innomotics 2024

Innomotics SD standard motors next generation

Cast-iron series Innomotics SD 1LE55, 1LE56

Special versions	Additional identification code -Z with order code and plain text if required	Frame size 132	160	180	200	225	250	280	315	355	400	450	Motor version
		1LE55.4 Basic Line									1LE5534		IEC IE4
		1LE56.4 Performance Line											
		1LE55.3 Basic Line									1LE55.3		IE3
		1LE56.3 Performance Line											
1LE5 . . . - . . . . . - . . . . -Z	Order code												
Special technology (continued)													
Mounting of Kübler Sendix 5834FS3 1024, SIL-3 rotary pulse encoder	**G22**	–	–	–	–	–	–	–	✓	✓	–	–	
Mounting of HOGS100S-B76.626.01024.1 rotary pulse encoder	**G25**	–	–	–	–	–	–	–	✓	✓	✓	✓	
Mounting of LL FSI 862-184560-1024, SIL-2 rotary pulse encoder	**G27**	–	–	–	–	–	–	–	✓	✓	✓	✓	
Mounting of rotary pulse encoder XSI 850 Overspeed	**G93**	–	–	✓	✓	✓	✓	✓	✓	✓	✓	✓	
Mounting of rotary pulse encoder XHI 861 Overspeed	**G94**	–	–	✓	✓	✓	✓	✓	✓	✓	✓	✓	
Mounting of a special type of rotary pulse encoder	**Y70 •** and customer specifications	O. R.	O. R.	O. R.	O. R.	O. R.	O. R.	O. R.	O. R.	O. R.	O. R.	O. R.	
Mounting of rotary pulse encoder HOG 10 DN 1024 I + FSL, (integrated centrifugal switch, speed ... rpm), terminal box moisture protection	**Y74 •** and spec. speed .... rpm	–	–	✓	✓	✓	✓	✓	✓	✓	✓	✓	
Mounting of rotary pulse encoder HOG 10 DN 1024 I + FSL, (integrated centrifugal switch, speed .... rpm), terminal box dust protection	**Y76 •** and spec. speed .... rpm	–	–	✓	✓	✓	✓	✓	✓	✓	✓	✓	
Mounting of rotary pulse encoder HOG 10 DN 1024 I + ESL 93, (integrated electronic speed switch, speed .... rpm), terminal box dust protection	**Y79 •** and spec. speed (max 3) .... rpm	–	–	✓	✓	✓	✓	✓	✓	✓	✓	✓	
Mechanical version and degrees of protection													
Low-noise version for 2-pole motors with clockwise direction of rotation	**F77**	✓	✓	–	–	O.R.	O.R.	✓	✓	✓	□	□	
Low-noise version for 2-pole motors with counterclockwise direction of rotation	**F78**	✓	✓	–	–	O. R.	O. R.	✓	✓	✓	○	○	
Prepared for mounted components, centering hole only	**G40**	✓	✓	□	□	□	□	□	□	□	□	□	
Prepared for mountings with D12 shaft	**G41**	✓	✓	✓	✓	✓	✓	✓	✓	✓	–	–	
Prepared for mountings with D16 shaft	**G42**	✓	✓	✓	✓	✓	✓	✓	✓	✓	✓	✓	
Mechanical protection for encoder	**G43**	✓	✓	✓	✓	✓	✓	✓	✓	✓	✓	✓	
Protective cover	**H00**	✓	✓	✓	✓	✓	✓	✓	✓	✓	✓	✓	
Screwed-on (instead of cast) feet	**H01**	✓	✓	✓	✓	✓	✓	✓	–	–	–	–	
Vibration-proof version; vibration resistance to Class 3M4 acc. to IEC 60721-3-3:1994	**H02**	✓	✓	✓	✓	✓	✓	✓	✓	✓	–	–	
Condensation drainage holes		□	□	□	□	□	□	□	□	□	□	□	
Rust-resistant screws (externally)	**H07**	✓	✓	✓	✓	✓	✓	✓	✓	✓	✓	✓	
Degree of protection IP66	**H19**	✓	✓	✓	✓	✓	✓	✓	✓	✓	–	–	
Degree of protection IP65	**H20**	✓	✓	✓	✓	✓	✓	✓	✓	✓	✓	✓	
Degree of protection IP54	**H21**	–	–	✓	✓	✓	✓	✓	✓	✓	–	–	
Degree of protection IP56	**H22**	✓	✓	✓	✓	✓	✓	✓	✓	✓	✓	✓	
Drive-end seal for flange-mounting motors, oil-tight to 0.1 bar	**H23**	✓	✓	✓	✓	✓	✓	✓	✓	✓	–	–	
Sealing ring made of fluoroelastomer (FKM)	**H25**	✓	✓	✓	✓	✓	✓	✓	✓	✓	✓	✓	
Increased corrosion protection for external components	**H90**	–	–	–	–	–	–	–	–	–	✓	✓	
Grounding brush for converter operation	**L52**	✓	✓	✓	✓	✓	✓	✓	✓	✓	✓	✓	
Coolant temperature and installation altitude													
Coolant temperature –50 to +40 °C	**D02**	✓	✓	✓	✓	✓	✓	✓	✓	✓	✓	✓	
Coolant temperature –40 to +40 °C	**D03**	✓	✓	✓	✓	✓	✓	✓	✓	✓	✓	✓	
Coolant temperature –30 to +40 °C	**D04**	✓	✓	✓	✓	✓	✓	✓	✓	✓	✓	✓	
Versions in accordance with standards and specifications													
VIK version	**C02**	✓	✓	✓	✓	–	–	✓	✓	–	O. R.	O. R.	
Chemstar version chemical industry	**C03**	✓	✓	✓	✓	–	–	✓	✓	–	–	–	
Chemstar version Oil & Gas industry	**C04**	✓	✓	✓	✓	✓	✓	✓	✓	–	–	–	
Performance Line Process industry	**C06**	✓	✓	✓	✓	✓	✓	✓	–	–	–	–	
Motor without CE marking for export outside EEA (see EU Regulation 2019/1781)	**D22**	○	○	○	○	○	○	○	○	○	○	○	

For legends, see page 4/42.

© Innomotics 2024

Innomotics SD standard motors next generation

Cast-iron series Innomotics SD 1LE55, 1LE56

Special versions	Additional identification code -Z with order code and plain text if required	Frame size 132	160	180	200	225	250	280	315	355	400	450	Motor version	
		1LE55.4 Basic Line									1LE5534		IEC	IE4
					1LE56.4 Performance Line									
					1LE55.3 Basic Line						1LE55.3			IE3
					1LE56.3 Performance Line									
1LE5 . . . - . . . . . - . . . . -Z	Order code													
Versions in accordance with standards and specifications (continued)														
Motor exclusively for use in transportation equipment for passenger and freight transportation corresponding to EVPG §1 dated February 27, 2008	**D23**	○	○	○	○	○	○	○	○	○	○	○		
Electrical acc. to NEMA MG1-12	**D30**	✓	✓	✓	✓	O. R.	✓	✓	✓	✓	–	–	Only for:	1LE550, 1LE560
		–	–	–	–	–	–	☐	☐	☐	☐	☐	Only for:	1LE553, 1LE563 1LE558, 1LE568
Design acc. to UL with "Recognition Mark"	**D31**	✓	✓	✓	✓	O. R.	✓	✓	✓	✓	–	–	Only for:	1LE550, 1LE560
		–	–	–	–	–	–	☐	☐	☐	☐	☐	Only for:	1LE553, 1LE563 1LE558, 1LE568
China Energy Efficiency Label	**D34**	○	○	○	○	○	○	○	○	○	–	–		
Canadian regulations (CSA)	**D40**	✓	✓	✓	✓	O. R.	✓	✓	✓	✓	–	–	Only for:	1LE550, 1LE560
		–	–	–	–	–	–	☐	☐	☐	☐	☐	Only for:	1LE553, 1LE563 1LE558, 1LE568
NEMA Premium Efficient, North America version acc. to NEMA MG1, Table 12-12, incl. UL and CSA	**D41**	✓	✓	✓	✓	O. R.	✓	✓	–	–	–	–		
TR CU product safety certificate EAC for Eurasian Customs Union	**D47**	✓	✓	✓	✓	✓	✓	✓	✓	✓	✓	✓		
MEPS Australia	**D70**	✓	✓	–	–	✓	✓	✓	✓	–	–	–	Only for:	1LE5533, 1LE5633 1LE5583, 1LE5683
BIS India (Indian standard IS 12615:2018)	**D72**	✓	✓	–	–	O. R.	✓	✓	✓	✓	✓	✓		
SASO EER	**D73**	O. R.	O. R.	O. R.	O. R.	O. R.	O. R.	O. R.	O. R.	O. R.	–	–	Only for:	IE3
UKCA marking		☐	☐	☐	☐	☐	☐	☐	☐	☐	☐	☐		
Bearings and lubrication														
Regreasing device with M10 × 1 grease nipple acc. to DIN 71412-A	**L19**	○	○	○	○	○	○	○	○	○	○	○		
Located bearing DE	**L20**	✓	✓	✓	✓	✓	✓	✓	✓	✓	☐	☐		
Located bearing NDE	**L21**	☐	☐	☐	☐	☐	☐	☐	☐	☐	✓	✓		
Bearing design for increased cantilever forces	**L22**	✓	✓	✓	✓	✓	✓	✓	✓	✓	O. R.	O. R.		
Regreasing device	**L23**	✓	✓	✓	✓	✓	✓	☐	☐	☐	☐	☐		
Hot bearing grease	**L24**	–	–	–	–	✓	–	–	O. R.	O. R.	–	–		
Bearings reinforced at both ends for DE and NDE, bearing size 63	**L25**	✓	✓	✓	✓	✓	✓	☐	☐	☐	–	–	Not for:	2- pole motots (frame size 280)
Reinforced bearings at both DE and NDE, DE bearing for increased cantilever forces	**L28**	✓	✓	✓	✓	✓	✓	–	–	–	–	–	Not for:	8- pole motots (frame size 280)
Drainage for used grease		–	–	–	–	–	–	–	☐	☐	O. R.	O. R.	Only for:	Performance Line
	L30	✓	✓	✓	✓	✓	✓	✓	✓	–			Only for:	Basic Line, Add and Pro
Motor design VSD, higher speed up to 4500 rpm, vibration level A acc. IEC60034-14, incl. routine test	**L37**	O. R.	O. R.	O. R.	O. R.	✓	✓	✓	✓	✓	✓	✓		
Bearing insulation DE	**L50**	✓	✓	✓	✓	✓	✓	✓	✓	✓	✓	✓		
Bearing insulation NDE	**L51**	✓	✓	✓	✓	✓	✓	✓	✓	✓	✓	✓		
Measuring nipple for SPM shock pulse measurement for bearing inspection	**Q01**	✓	✓	✓	✓	✓	✓	✓	✓	✓	✓	✓		
Motor design VSD, higher speed up to .... rpm, vibration level .. acc. IEC60034-14, with or w/o routine test	**Y37**	O. R.	O. R.	O. R.	O. R.	O. R.	O. R.	O. R.	O. R.	O. R.	O. R.	O. R.		
Balance and vibration severity														
Vibration severity grade A		☐	☐	☐	☐	☐	☐	☐	☐	☐	☐	☐		
Vibration severity grade B	**L00**	✓	✓	✓	✓	✓	✓	✓	✓	✓	✓	✓	Only for:	4-pole motors for (frame sizes 315 and 355)
Half-key balancing (standard)		☐	☐	☐	☐	☐	☐	☐	☐	☐	☐	☐		
Balancing without feather key	**L01**	✓	✓	✓	✓	✓	✓	✓	✓	✓	✓	✓		
Full-key balancing	**L02**	✓	✓	✓	✓	✓	✓	✓	✓	✓	✓	✓		

For legends, see page 4/42.

© Innomotics 2024

Innomotics SD standard motors next generation

Cast-iron series Innomotics SD 1LE55, 1LE56

Special versions	Additional identification code -Z with order code and plain text if required	Frame size 132	160	180	200	225	250	280	315	355	400	450	Motor version	
		1LE55.4 Basic Line									1LE5534		IEC	IE4
					1LE56.4 Performance Line									
					1LE55.3 Basic Line						1LE55.3			IE3
					1LE56.3 Performance Line									
1LE5 . . . - . . . . . - . . . . -Z	Order code													
Shaft and rotor														
Shaft extension with standard dimensions, without feather keyway	**L04**	✓	✓	✓	✓	✓	✓	✓	✓	✓	✓	✓		
Standard, cylindrical shaft extension (second shaft extension) NDE acc. to EN 50347	**L05**	✓	✓	✓	✓	✓	✓	✓	✓	✓	✓	✓		
Standard shaft made of stainless steel (e.g. 1.4021)	**L06**	✓	✓	✓	✓	✓	✓	✓	✓	✓	–	–		
Shaft extension run-out in accordance with IEC 60072-1 precision class	**L07**	✓	✓	✓	✓	✓	✓	✓	✓	✓	✓	✓		
Shaft extension run-out, concentricity and perpendicularity in accordance with IEC 60072-1 precision class for flange-mounted motors	**L08**	✓	✓	✓	✓	✓	✓	✓	✓	✓	✓	✓	Not for:	Combination with type of construction code letters A, T, U, V (14th position of the Article No.) for frame sizes 315 and 355
Non-standard cylindrical shaft extension, DE	**Y58 •** and customer specifications	✓	✓	✓	✓	✓	✓	✓	✓	✓	✓	✓		
Non-standard cylindrical shaft extension, NDE	**Y59 •** and customer specifications	✓	✓	✓	✓	✓	✓	✓	✓	✓	✓	✓		
Special shaft steel	**Y60 •** and customer specifications	O. R.	O. R.	O. R.	O. R.	O. R.	O. R.	O. R.	O. R.	O. R.	O. R.	O. R.		
Heating and ventilation														
Sheet metal fan cover	**F74**	✓	✓	✓	✓	✓	✓	✓	✓	–	☐	☐	Only for:	Basic Line
									☐	☐			Only for:	Performance Line
Metal external fan	**F76**	✓	✓	✓	✓	✓	✓	✓	✓	☐	O. R.	O. R.	Only for:	frame size 315, 11th position of Article No. 0, 2, 4, 5 (2- ... 8-pole) 6 (6- and 8-pole)
									☐				Only for:	frame size 315, 11th position of Article No. 6, 7 (2- and 4-pole motors) 7, 8 (6- and 8-pole motors)
Without external fan and without fan cover	**F90**	✓	✓	✓	✓	✓	✓	✓	✓	✓	✓	✓		
Anti-condensation heating for 230 V (2 terminals)	**Q02**	✓	✓	✓	✓	✓	✓	✓	✓	✓	✓	✓		
Anti-condensation heating for 115 V (2 terminals)	**Q03**	✓	✓	✓	✓	✓	✓	✓	✓	✓	✓	✓		
Anti-condensation heating for 400 V (2 terminals)	**Q06**	–	–	–	–	–	–	–	✓	✓	✓	✓		
Separately driven fan with non-standard voltage and/or frequency	**Y81 •** and customer specifications	–	–	–	–	✓	✓	✓	✓	✓	✓	✓		
Rating plate and additional rating plates														
Additional rating plate for voltage tolerance	**B07**	✓	✓	✓	✓	✓	✓	✓	✓	✓	✓	✓		
Removal of P60 60Hz data from rating plate	**B18**	✓	✓	✓	✓	✓	✓	✓	–	–	–	–		
Second rating plate, loose	**M10**	✓	✓	✓	✓	✓	✓	✓	✓	✓	✓	✓		
Rating plate, stainless steel	**M11**	✓	✓	✓	✓	✓	✓	✓	✓	–	☐	☐	Only for:	Basic Line
									☐	☐				
Additional rating plate with deviating rating plate data	**Y80 •** and customer specifications	✓	✓	✓	✓	✓	✓	✓	✓	✓	✓	✓		
Additional rating plate with customer specifications	**Y82 •** and customer specifications	✓	✓	✓	✓	✓	✓	✓	✓	✓	✓	✓		
Additional information on rating plate and on package label (max. 20 characters)	**Y84 •** and customer specifications	✓	✓	✓	✓	✓	✓	✓	✓	✓	✓	✓		
Adhesive label, supplied loose (printed with: Article No., Serial No.: 2 lines of text)	**Y85 •** and customer specifications	✓	✓	✓	✓	✓	✓	✓	✓	✓	–	–		

For legends, see page 4/42.

© Innomotics 2024

Innomotics SD standard motors next generation

Cast-iron series Innomotics SD 1LE55, 1LE56

Special versions	Additional identification code **-Z** with order code and plain text if required	Frame size											Motor version	
		132	**160**	**180**	**200**	**225**	**250**	**280**	**315**	**355**	**400**	**450**		
		1LE55.4 Basic Line									**1LE5534**		IEC	IE4
					1LE56.4 Performance Line									
							1LE55.3 Basic Line				**1LE55.3**			IE3
					1LE56.3 Performance Line									
1LE5 . . . - . . . . . - . . . . -Z	Order code													
Extension of the liability for defects														
Extension of the liability for defects by 12 months to a total of 24 months (2 years) from delivery	**Q80**	✓	✓	✓	✓	✓	✓	✓	✓	✓	✓	✓		
Extension of the liability for defects by 18 months to a total of 30 months (2.5 years) from delivery	**Q81**	✓	✓	✓	✓	✓	✓	✓	✓	✓	✓	✓		
Extension of the liability for defects by 24 months to a total of 36 months (3 years) from delivery	**Q82**	✓	✓	✓	✓	✓	✓	✓	✓	☐	✓	✓		
Extension of the liability for defects by 30 months to a total of 42 months (3.5 years) from delivery	**Q83**	✓	✓	✓	✓	✓	✓	✓	✓	✓	✓	✓		
Extension of the liability for defects by 36 months to a total of 48 months (4 years) from delivery	**Q84**	✓	✓	✓	✓	✓	✓	✓	✓	✓	✓	✓		
Extension of the liability for defects by 48 months to a total of 60 months (5 years) from delivery	**Q85**	✓	✓	✓	✓	✓	✓	✓	✓	✓	✓	✓		
Packaging, safety notes, documentation and test certificates														
Inspection certificate 3.1 acc. to EN 10204	**B02**	✓	✓	✓	✓	✓	✓	✓	✓	✓	✓	✓		
Without "Made in manufacturing country" marking	**B13**	O	O	O	O	O	O	O	O	O	–	–		
Starting curves (torque-speed and current-speed)	**B50**	✓	✓	✓	✓	✓	✓	✓	✓	✓	✓	✓		
Equivalent circuit diagram	**B51**	✓	✓	✓	✓	✓	✓	✓	✓	✓	✓	✓		
Starting diagram (torque vs. speed and current vs. speed)	**B52**	✓	✓	✓	✓	✓	✓	✓	✓	✓	✓	✓		
Document - Electrical datasheet	**B60**	✓	✓	✓	✓	✓	✓	✓	✓	✓	✓	✓		
Document - Order dimensional drawing	**B61**	✓	✓	✓	✓	✓	✓	✓	✓	✓	✓	✓		
Standard test (routine test) with acceptance	**B65**	✓	✓	✓	✓	✓	✓	✓	✓	✓	✓	✓		
Temperature test without acceptance	**B67**	✓	✓	✓	✓	✓	✓	✓	✓	✓	✓	✓		
Temperature test with acceptance	**B68**	✓	✓	✓	✓	✓	✓	✓	✓	✓	✓	✓		
Remote acceptance	**B77**	–	–	✓	✓	✓	✓	✓	✓	✓	✓	✓		
Hybrid acceptance	**B78**	–	–	✓	✓	✓	✓	✓	✓	✓	✓	✓		
Type test with heat run for horizontal motors, without acceptance	**B82**	✓	✓	✓	✓	✓	✓	✓	✓	✓	✓	✓		
Type test with heat run for horizontal motors, with acceptance	**B83**	✓	✓	✓	✓	✓	✓	✓	✓	✓	✓	✓		
"Basic" documentation package	**B90**	✓	✓	✓	✓	✓	✓	✓	✓	✓	✓	✓		
"Advanced" documentation package	**B91**	✓	✓	✓	✓	✓	✓	✓	✓	✓	✓	✓		
"Projects" documentation package	**B92**	✓	✓	✓	✓	✓	✓	✓	✓	✓	✓	✓		
Dedicated Global Project	**Y90**	✓	✓	✓	✓	✓	✓	✓	–	–	–	–		

☐ Standard version
O Without additional charge
• This order code only determines the price of the version – Additional plain text is required.
✓ With additional charge
O. R. Possible on request
– Not possible

Note:
The catalog provides an overview of the available motor options but doesn't detail the correct logic combinations.
For a customized selection tailored to your specific requirements, please use the Siemens Product Configurator at the following address: configurator.innomotics.com

© Innomotics 2024

Overview

Couplings

The motor from Innomotics is connected to the machine or gear unit through a coupling. Flender is an important coupling manufacturer with a wide range of products.

For standard applications, Siemens recommends that flexible couplings, types N-EUPEX and RUPEX or torsionally rigid couplings, types ARPEX and ZAPEX are used. For special applications, FLUDEX and ELPEX-S couplings are recommended.

Available from:

Siemens contact partner - ordering from catalog
Siemens MD 10.1 "FLENDER Standard Couplings"

or

Flender GmbH
Kupplungswerk Mussum
Industriepark Bocholt
Schlavenhorst 100
46395 Bocholt, Germany
Phone +49 (2871) 922185
Fax +49 (2871) 922579

www.flender.com

Taper pins according to DIN 258 with threaded ends and constant taper lengths

Taper pins are used for components that are repeatedly removed. The drilled hole is conically ground using a conical reamer until the pin can be pushed in by hand until the cone shoulder lies approx. 3 to 4 mm above the rim of the hole.

It can then be driven in using a hammer until it is correctly seated. The pin is removed from the drilled hole by screwing on the nut and tightening it.

Standardized taper pins are commercially available.

For instance, available from:

Otto Roth GmbH & Co. KG
Rutesheimer Strasse 22
70499 Stuttgart, Germany
Phone +49 (711) 1388-0
Fax. +49 (711) 1388-233

www.ottoroth.de
Email: info@ottoroth.de

Foundation blocks according to DIN 799

The foundation blocks are inserted into the stone foundation and embedded in concrete. They are used for fixing machines of medium size, slide rails, pedestal bearings, base frames, etc. After the fixing bolts have been unscrewed, the machines can be shifted without them having to be lifted.

When the machine is initially installed, the foundation blocks that are bolted to the machine (without washers) and fitted with taper pins are not embedded with concrete until the machine has been fully aligned. In this case, the machine is positioned 2 to 3 mm lower. The difference in shaft height is compensated by inserting shims on final installation. The taper pins safeguard the exact position of the machine when it is repeatedly removed and replaced without the need for realignment.

Available from:

Lütgert & Co. GmbH
Postfach 42 51
33276 Gütersloh, Germany
Phone +49 (5241) 7407-0
Fax +49 (5241) 7407-90

www.luetgert-antriebe.de
Email: info@luetgert-antriebe.de

Slide rails with fixing bolts and tensioning screws according to DIN 42923

Slide rails are used to tension the belt of a machine easily and conveniently when there is no belt-tensioning pulley. They are fixed to the base using stone bolts or foundation blocks.

The assignment of slide rails to motor size can be found in DIN 42923. For motors of frame sizes 355 to 450, there are no standardized slide rails (please inquire).

Available from:

Lütgert & Co. GmbH
Postfach 42 51
33276 Gütersloh, Germany
Phone +49 (5241) 7407-0
Fax +49 (5241) 7407-90

www.luetgert-antriebe.de
Email: info@luetgert-antriebe.de

© Innomotics 2024

More information

Spare motors and repair parts

- Commitment to provide replacement motors and repair parts following delivery of the motor:
  - For up to 3 years after delivery of the original motor, in the event of total motor failure, Innomotics will supply a comparable replacement motor with regard to the mounting dimensions and functions (the type series may vary).
  - If a replacement motor is supplied within the 3-year period, this does not mean that the warranty restarts.
  - Replacement motors delivered after the active production of the machine series are also identified as spare motors on the rating plate.
  - Spare parts are offered only for these spare motors on request; repair and replacement are not possible.
  - After a period of 3 years (after the delivery of the original motor), it is only possible to repair these motors (depending on the availability of the spare parts required).
  - For up to 5 years after the delivery of the original motor, spare parts will be available and for a further 5 years, Innomotics will provide information about spare parts and will supply documents when required.
- When repair parts are ordered, the following details must be provided:
  - Designation and part number
  - Article No. and factory number of the motor.
- For bearing types, see Catalog Section 1 "Introduction".
- For standard components, a commitment to supply repaired parts does not apply.

You will find telephone numbers for other countries on our Internet site:
innomotics.com/hub/en/customer-service

© Innomotics 2024

Notes on the dimensions

Overview

- Dimension designations according to EN 50347 and IEC 60072.
- Fits
  The shaft extensions specified in the dimension tables (DIN 748) and centering spigot diameters (EN 50347) are machined with the following fits:

Dimension	ISO fit DIN ISO 286-2 designation	
D, DA	to 30	j6
	over 30 to 50	k6
	over 50	m6
N	to 250	j6
	over 250	h6
F, FA		h9
S	flange (FF)	H17

The drilled holes of couplings and belt pulleys should have an ISO fit of at least H7.

Dimension K: Nominal dimension according IEC 60072-1, negative deviation of tolerance H17 possible.

- Dimensional tolerances
  For the following dimensions, the admissible deviations are given below:

Dimension	Admissible designation deviation	
H	to 250	– 0,5
	over 250	– 1,0
E, EA		– 0,5

Keyways and feather keyways (dimensions GA, GC, F, and FA) are made in compliance with DIN 6885 Part 1.

- All dimensions are specified in mm.
- The overall width of the motor is identical to the "AC" dimension.

Dimension sheet generator (within the Siemens Product Configurator)

4

Overview

A dimensional drawing can be created in the "Siemens Product Configurator" for every configurable motor.
A dimensional drawing can be requested for every other motor.

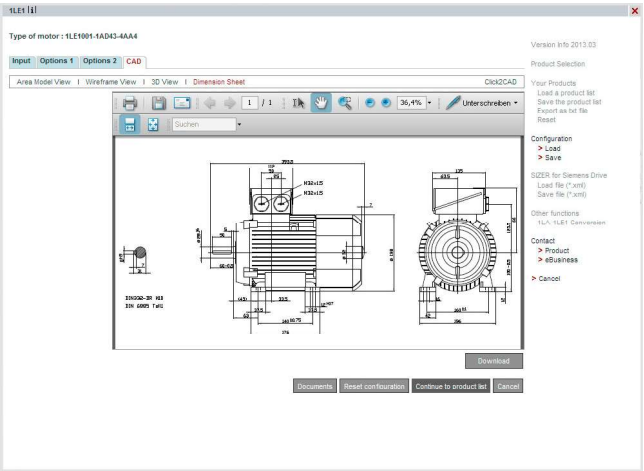

When a complete Article No. is entered with or without order codes, a dimensional drawing can be called up under the "Documentation" tab.

These dimensional drawings can be presented in different views and sections and printed.
The corresponding dimension sheets can be exported, saved and processed further in DXF format (interchange/import format for CAD systems) or as bitmap graphics.

Online access in the Siemens Industry Mall

The Siemens Product Configurator is integrated into the Siemens Industry Mall and can be used on the Internet without installation.
configurator.innomotics.com

© Innomotics 2024

Innomotics SD standard motors next generation

IE4 – self-ventilated · Frame sizes 132 S to 315 L

Dimensional drawings

Type of construction IM B3

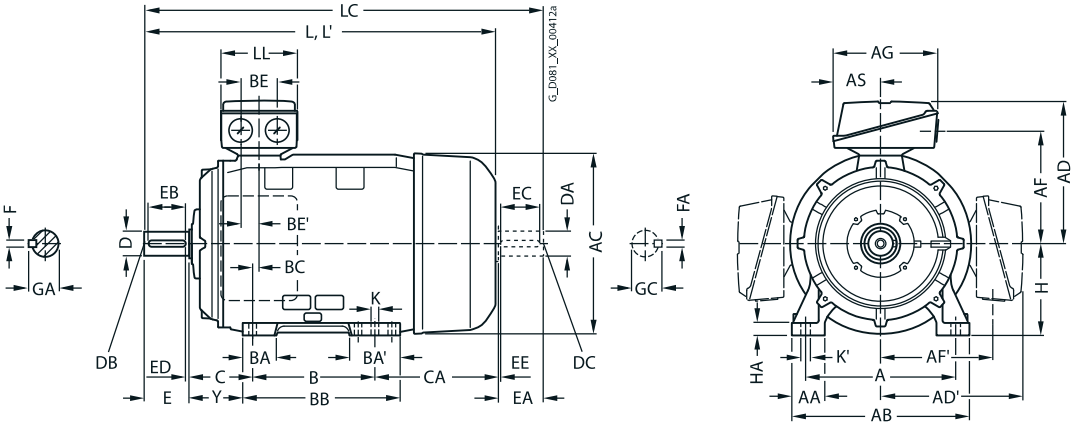

Types of construction IM B5 and IM V1

For flange dimensions, see page 1/59 (**Z** = the number of retaining holes)

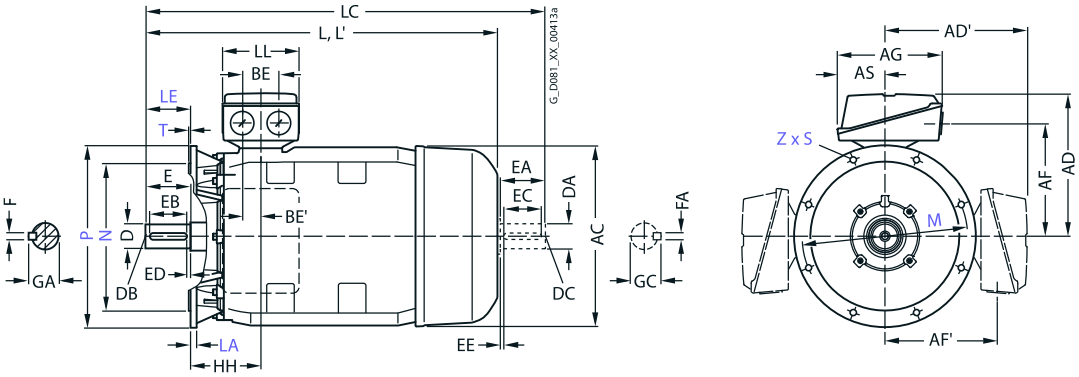

Type of construction IM B35

For flange dimensions, see page 1/59 (**Z** = the number of retaining holes)

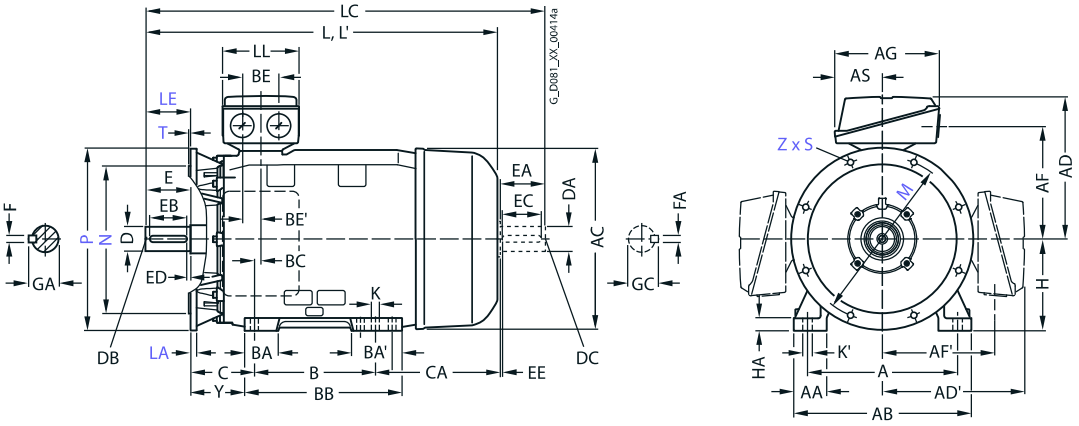

© Innomotics 2024

Innomotics SD standard motors next generation

Dimensional drawings

For motor		Dimension designation acc. to **IEC**																										
Frame size	Motor type 1LE5.0.-	No. of poles	A	AA	**AB**	AC	**AD**	AD'	AD''	AG	AG'	AG''	AH	B	B'	B''	BA	BA'	BB	BC	BE	BE'	C	CA	CA'	CA''	**H**	HA	HB
132 S/M	1CA0. 1CA1. 1CB0. 1CC0. 1CC2. 1CD0. 1CD2	all	216	50	**256**	262	**234**	–	–	162.5	–	–	370	140	178	–	55	95	218	33.5	48	24	89	228.5	190.5	–	**132**	15	–
132 M	1CB2, 1CC	4, 6																											
160 M/L	1DA2. 1DA§. 1DB2. 1DC2. 1DD2. 1DD3	all	254	60	**300**	316	**289**	–	–	189	–	–	448	210	254	–	77	121	300	52	60	30	108	260.5	216.5	–	**160**	18	–
160 L	1DA4, 1DB4, 1DC4, 1DD4																												
180 M	1EA2, 1EB2, 1EB4, 1EC4, 1ED4	all	279	60	339	354	314	–	–	189	–	–	490	241	279	–	90	128	328	45	60	30	121	304.5	266.5	–	**180**	20	–
200 L	2AA4, 2AA5, 2AB5, 2AC4, 2AC5, 2AD5	all	318	70	378	394	318	–	–	265	–	–	554	305	–	–	105	105	355	74	85	42.5	133	273.5	–	–	**200**	25	–
225	2BA2, 2BB0	2, 4	356	80	**436**	446	**355**	355	265	–	–	–	–	286	311	–	100	123	361	59	85	42.5	149	358	333	–	**225**	34	–
	2BB2	4																											
	2BA6	2																											
	2BB6, 2BC6	4, 6																											
	2BC2, 2BD0, 2BD2, 2BD6	6, 8																											
250 M	2CA2, 2CA6	2	406	100	**490**	487	**420**	420	–	319	–	–	–	349	–	–	111	111	409	80	110	55	168	305	–	–	**250**	40	–
	2CB2	4																											
	2CB6	4																											
	2CC2, 2CC6, 2CD2, 2CD6	6 8																											
280 S	2DA0. 2DA2	2	457	100	**540**	554	**433**	–	–	319	–	–	–	368	419	–	114	165	479	74	110	55	190	316	265	–	**280**	40	–
	2DB0. 2DC0. 2DC2. 2DD0. 2DD2. 2DD6	4. 6. 8																											
280 M	2DA6	2	406	100	**490**	487	**420**	420	–	319	–	–	–	349	–	–	111	111	409	80	110	55	168	305	–	–	**250**	40	–
	2DB2. 2DC6	4. 6																											
	2DB6	4																											
315 S	3AA0, 3AB0, 3AC0, 3AD0	2, 4, 6, 8	508	120	**610**	624	**539**	–	–	374	–	–	–	406	457	–	177	225	570	22	110	55	216	335	284	–	**315**	50	–
315 M	3AA2, 3AB2	2, 4	508	120	**610**	624	**539**	–	–	374	–	–	–	457	508	–	177	227	648	22	110	55	216	374	323	–	**315**	50	–
	3AC2, 3AD2	6, 8												406	457			225	570										
315 L	3AA4, 3AA5	2	508	120	**610**	624	**539**	–	–	374	–	–	–	457	508	–	177	227	648	22	110	55	216	374 524	323 473	–	**315**	50	–
	3AB4, 3AB5, 3AC6	4, 6																						524	473				
	3AC4, 3AC5, 3AD4, 3AD5	6 8																						374	323				

4

© Innomotics 2024

Innomotics SD standard motors next generation

IE4 – self-ventilated · Frame sizes 132 S to 315 L

Dimensional drawings

For motor		Dimension designation acc. to **IEC**													DE shaft extension							NDE shaft extension						
Frame size	Motor type 1LE5.0.-	No. of poles	HB'	HB"	HC	HD	HD'	HH	Y	K	K'	**L**	LC [1]	LL	D	DB	E	EB	ED	F	GA	DA	DC	EA	EC	EE	FA	GC
132 S/M	1CA0, 1CA1, 1CB0, 1CC0, 1CC2, 1CD0, 1CD2	all	–	–	–	–	–	122.5	–	12	16	**518.5**	597.5	134	38	M12	80	70	5	10	41	28	M10	60	50	5	8	11
132 M	1CB2, 1CC3	4, 6										**560.5**	639.5															
160 M/L	1DA2, 1DA§, 1DB2, 1DC2, 1DD2, 1DD3	all	–	–	–	–	–	160	–	15	19	**664.5**	798.5	164	42	M16	110	90	10	12	45	42	M16	110	90	10	12	45
160 L	1DA4, 1DB4, 1DC4, 1DD4	all										**700.5**	834.5															
180 M	1EA2, 1EB2, 1EB4, 1EC4, 1ED4	all	–	–	–	–	–	166	–	15	19	**770.5**	886.5	164	48	M16	110	100	5	14	51.5	48	M16	110	100	5	14	51.4
200 L	2AA4, 2AA5, 2AB5, 2AC4, 2AC5, 2AD5	all	–	–	–	–	–	207	–	19	25	**817.5**	931.5	197	55	M20	110	100	5	16	59	55	M20	110	100	5	16	59
225	2BA2, 2BB0	2, 4	–	–	–	–	–	208	124	19	25	**893**	1008	197	55	M20	110	100	5	16	59	48	M16	110	100	5	14	51.5
	2BB2	4										**933**	1048		60		140	125	7.5	18	64	55	M20				16	59
	2BA6	2													55		110	100	5	16	59	48	M16				14	51.5
	2BB6, 2BC6	4, 6										**1003**	1118		60		140	125	7.5	18	64	55	M20				16	59
	2BC2, 2BD0, 2BD2, 2BD6	6, 8										**893**	1008															
250 M	2CA2, 2CA6	2	–	–	–	–	–	–	–	24	30	**962**	1107	233	60	M20	140	125	7.5	18	69	55	M20	110	100	5	16	59
	2CB2	4													65							60		140	125	7.5	18	64
	2CB6	4										**1032**	1177															
	2CC2, 2CC6, 2CD2, 2CD6	6 8										**962**	1107															
280 S	2DA0, 2DA2	2	–	–	–	–	–	264	160	24	30	**1014**	1159	233	65	M20	140	125	7.5	18	69	60	M16	140	125	7.5	18	64
	2DB0, 2DC0, 2DC2, 2DD0, 2DD2, 2DD6	4, 6, 8													75					20	79.5	65						69
280 M	2DA6	2	–	–	–	–	–	264	160	24	30	**1069**	1214	233	65	M20	140	125	7.5	18	69	60	M16	140	125	7.5	18	64
	2DB2, 2DC6	4, 6													75					20	79.5	65						69
	2DB6	4										**1144**	1289															
315 S	3AA0 3AB0, 3AC0, 3AD0	2, 4, 6, 8	–	–	–	–	–	238	146	28	35	**1097** **1127**	1242 1272	299	65 80	M20	1401 70	1251 40	10 25	18 22	69 85	60 70	M20	140	125	10	18 20	64 74.5
315 M	3AA2	2	–	–	–	–	–	238	146	28	35	**1187**	1332	299	65	M20	140	125	10	18	69	60	M20	140	125	10	18	64
	3AB2	4											1362		80		170	140	25	22	85	70					20	74.5
	3AC2, 3AD2	6, 8											1272															
315 L	3AA4 3AA5	2	–	–	–	–	–	238	146	28	35	**1187** **1327**	1332 1472	299	65	M20	140	125	10	18	69	60	M20	140	125	10	18	64
	3AB4, 3AB5, 3AC6	4, 6										**1357**	1502		80		170	140	25	22	85	70					20	74.5
	3AC4, 3AC5, 3AD4, 3AD5	6, 8										**1217**	1362															

[1] In the low-noise version, a second shaft extension and/or mounted encoder is not possible.

© Innomotics 2024

Dimensional drawings

For motor		Dimension designation acc. to **IEC**																									
Frame size	Motor type 1LE5534-	No. of poles	A	AA	**AB**	AC	**AD**	AD'	AD''	AG	AG'	AG''	AH	B	B'	B''	BA	BA'	BB	BC	BE	BE'	C	CA	CA'	CA''	**H**	HA	HB
315 S	3AA0, 3AB0, 3AC0, 3AD0	2, 4, 6, 8	508	120	**610**	624	**539**	–	–	374	–	–	–	406	457	–	177	225	570	22	110	55	216	335	284	–	**315**	50	–
315 M	3AA2, 3AB2	2, 4	508	120	**610**	624	**539**	–	–	374	–	–	–	457	508	–	177	227	648	22	110	55	216	374	323	–	**315**	50	–
	3AC2, 3AD2	6, 8												406	457			225	570										
315 L	3AA4, 3AA5	2	508	120	**610**	624	**539**	–	–	374	–	–	–	457	508	–	177	227	648	22	110	55	216	374 524	323 473	–	**315**	50	–
	3AB4, 3AB5, 3AC6	4																						524	473				
	3AC4, 3AC5	6																						374	323				
	3AD4, 3AD5	8																											

For motor		Dimension designation acc. to **IEC**													DE shaft extension							NDE shaft extension						
Frame size	Motor type 1LE5534-	No. of poles	HB'	HB''	HC	HD	HD'	HH	Y	K	K'	**L**	LC [1]	LL	D	DB	E	EB	ED	F	GA	DA	DC	EA	EC	EE	FA	GC
315 S	3AA0 3AB0, 3AC0, 3AD0	2, 4, 6, 8	–	–	–	–	–	238	146	28	35	**1097** **1127**	1242 1272	299	65 80	M20	140 170	125 140	10 25	18 22	69 85	60 70	M20	140	125	10	18 20	64 74,5
315 M	3AA2	2	–	–	–	–	–	238	146	28	35	**1187**	1332	299	65	M20	140	125	10	18	69	60	M20	140	125	10	18	64
	3AB2	4											1362		80		170	140	25	22	85	70					20	74,5
	3AC2, 3AD2	6, 8											1272															
315 L	3AA4	2	–	–	–	–	–	238	146	28	35	**1187**	1332	299	65	M20	140	125	10	18	69	60	M20	140	125	10	18	64
	3AA5											**1327**	1472															
	3AB4, 3AB5, 3AC6	4, 6										**1357**	1502		80		170	140	25	22	85	70					20	74,5
	3AC4, 3AC5, 3AD4, 3AD5	6, 8										**1217**	1362															

[1] In the low-noise version, a second shaft extension and/or mounted encoder is not possible.

© Innomotics 2024

Innomotics SD standard motors next generation

IE4 – self-ventilated · Frame sizes 250 M to 315 L

Dimensional drawings

For motor		Dimension designation acc. to **IEC**																										
Frame size	Motor type 1LE5584-	No. of poles	A	AA	**AB**	AC	**AD**	AD'	AD''	AG	AG'	AG''	AH	B	B'	B''	BA	BA'	BB	BC	BE	BE'	C	CA	CA'	CA''	**H**	HA	HB
280 S	2DA0, 2DA2, 2DB0, 2DC0, 2DC2, 2DD0, 2DD2	2, 4, 6, 8	457	100	**540**	554	**433**	–	–	319	–	–	–	368	419	–	114	165	479	74	110	55	190	316	265	–	**280**	40	–
280 M	2DB2	4						–	–		–	–	–	419	–	–									–	–			–
315 S	3AA0, 3AB0, 3AC0, 3AD0	2, 4, 6, 8	508	120	**610**	624	**539**	–	–	374	–	–	–	406	457	–	177	225	570	22	110	55	216	335	284	–	**315**	50	–
315 M	3AA2, 3AB2	2, 4	508	120	**610**	624	**539**	–	–	374	–	–	–	457	508	–	177	227	648	22	110	55	216	374	323	–	**315**	50	–
	3AC2, 3AD2	6, 8												406	457			225	570					335	284				
315 L	3AA4, 3AA5	2	508	120	**610**	624	**539**	–	–	374	–	–	–	457	508	–	177	227	648	22	110	55	216	374 524	323 473	–	**315**	50	–
	3AB4,3AB5	4																						524	473				
	3AC4, 3AC5 3AC6	6																						374 524	323 473				
	3AD4, 3AD5, 3AD6	8																						374	323				

For motor		Dimension designation acc. to **IEC**													DE shaft extension							NDE shaft extension						
Frame size	Motor type 1LE5584-	No. of poles	HB'	HB''	HC	HD	HD'	HH	Y	K	K'	**L**	LC [1]	LL	D	DB	E	EB	ED	F	GA	DA	DC	EA	EC	EE	FA	GC
280 S	2DA0, 2DA2, 2DB0, 2DC0, 2DC2, 2DD0, 2DD2	2, 4, 6, 8	–	–	–	–	–	264	160	24	30	**1014**	1159	233	65 75	M20	140	125	7.5	18 20	69 79.5	60 65	M16	140	125	7.5	18	64 69
280 M	2DB2	4	–	–	–	–	–					**1069**	1214		75					20	79.5	65						69
315 S	3AA0 3AB0, 3AC0, 3AD0	2, 4, 6, 8						238	146	28	35	**1097** **1127**	1242 1272	299	65 80	M20	1401 70	1251 40	10 25	18 22	69 85	60 70	M20	140	125	10	18 20	64 74.5
315 M	3AA2	2	–	–	–	–	–	238	146	28	35	**1187**	1332	299	65	M20	140	125	10	18	69	60	M20	140	125	10	18	64
	3AB2	4										**1217**	1362		80		170	140	25	22	85	70					20	74.5
	3AC2, 3AD2	6, 8										**1127**	1272															
315 L	3AA4	2	–	–	–	–	–	238	146	28	35	**1187**	1332	299	65	M20	140	125	10	18	69	60	M20	140	125	10	18	64
	3AA5											**1327**	1472															
	3AB4, 3AB5, 3AC6	4, 6										**1357**	1502		80		170	140	25	22	85	70					20	74.5
	3AC4, 3AC5, 3AD4, 3AD5, 3AD6	6, 8										**1217**	1362															

[1] In the low-noise version, a second shaft extension and/or mounted encoder is not possible.

© Innomotics 2024

Innomotics SD standard motors next generation

Dimensional drawings

Type of construction IM B3

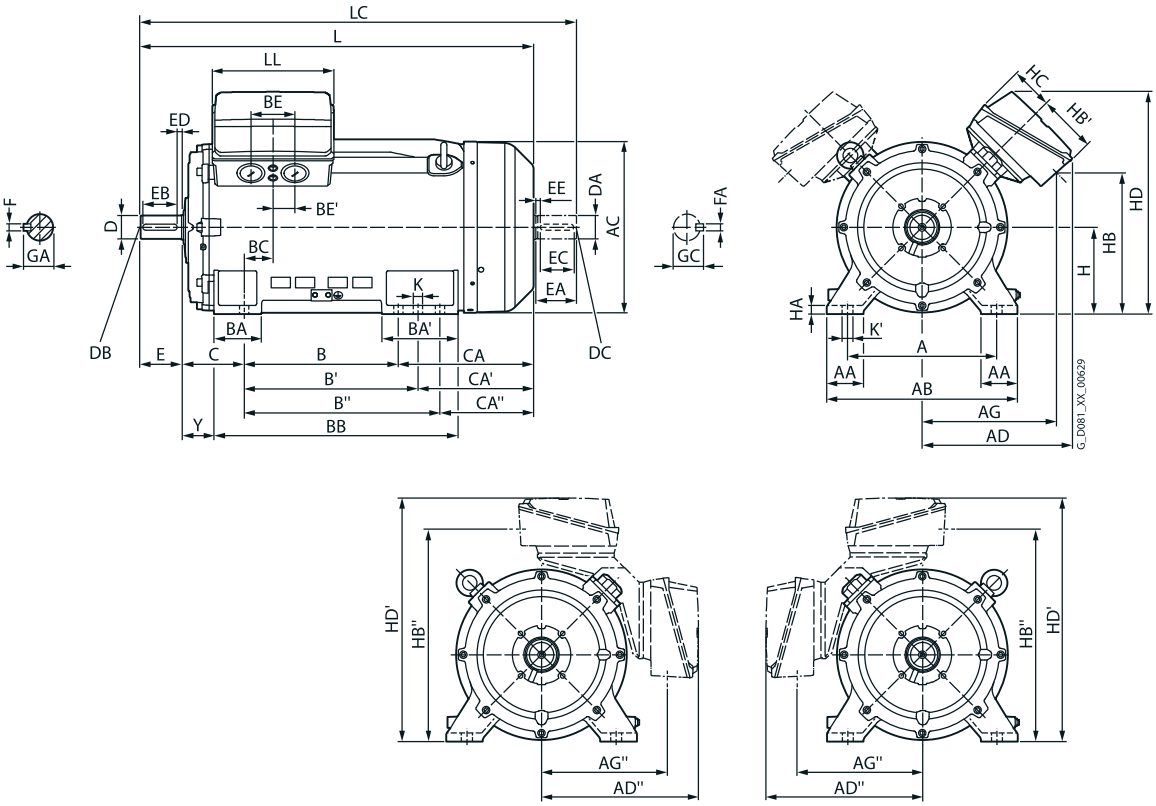

4

© Innomotics 2024

Innomotics SD standard motors next generation

IE4, IE3 – self-ventilated · Frame sizes 315 L to 450

Dimensional drawings

Types of construction IM B5 and IM V1

For flange dimensions, see page 1/59 (**Z** = the number of retaining holes)

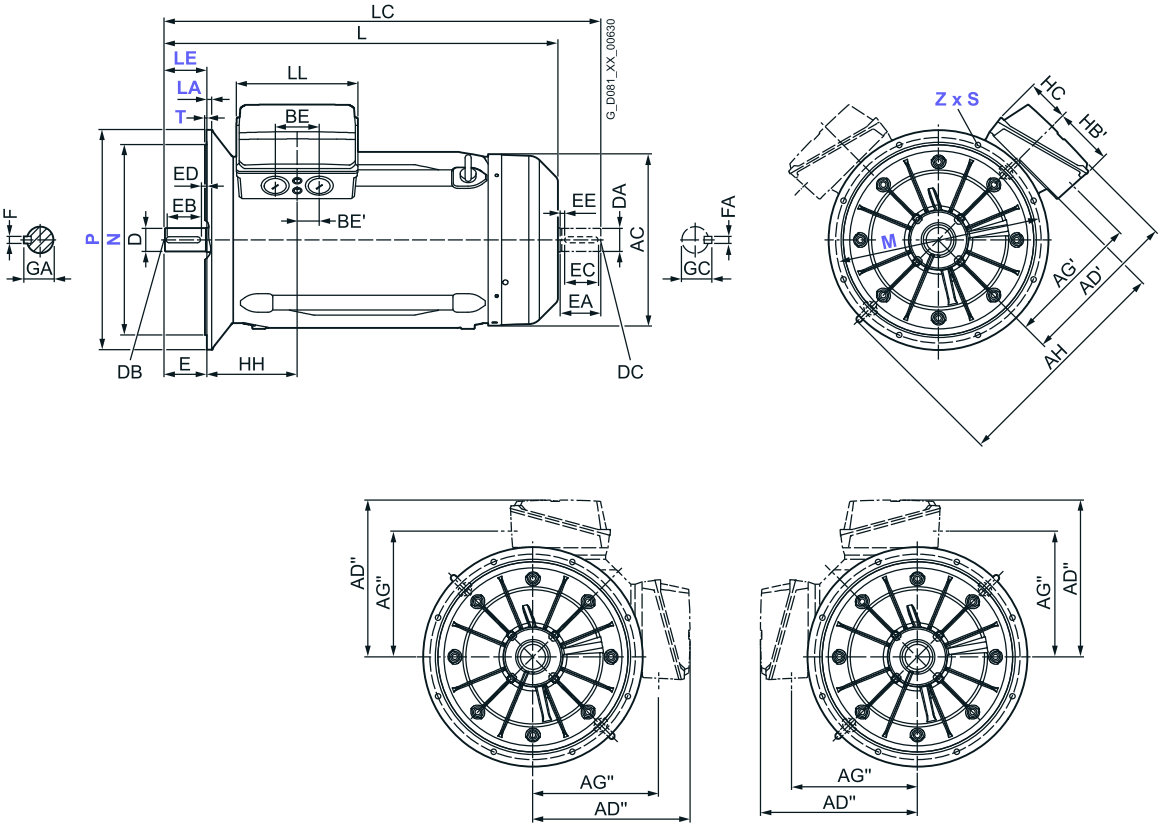

© Innomotics 2024

Dimensional drawings

Type of construction IM B35

For flange dimensions, see page 1/59 (**Z** = the number of retaining holes)

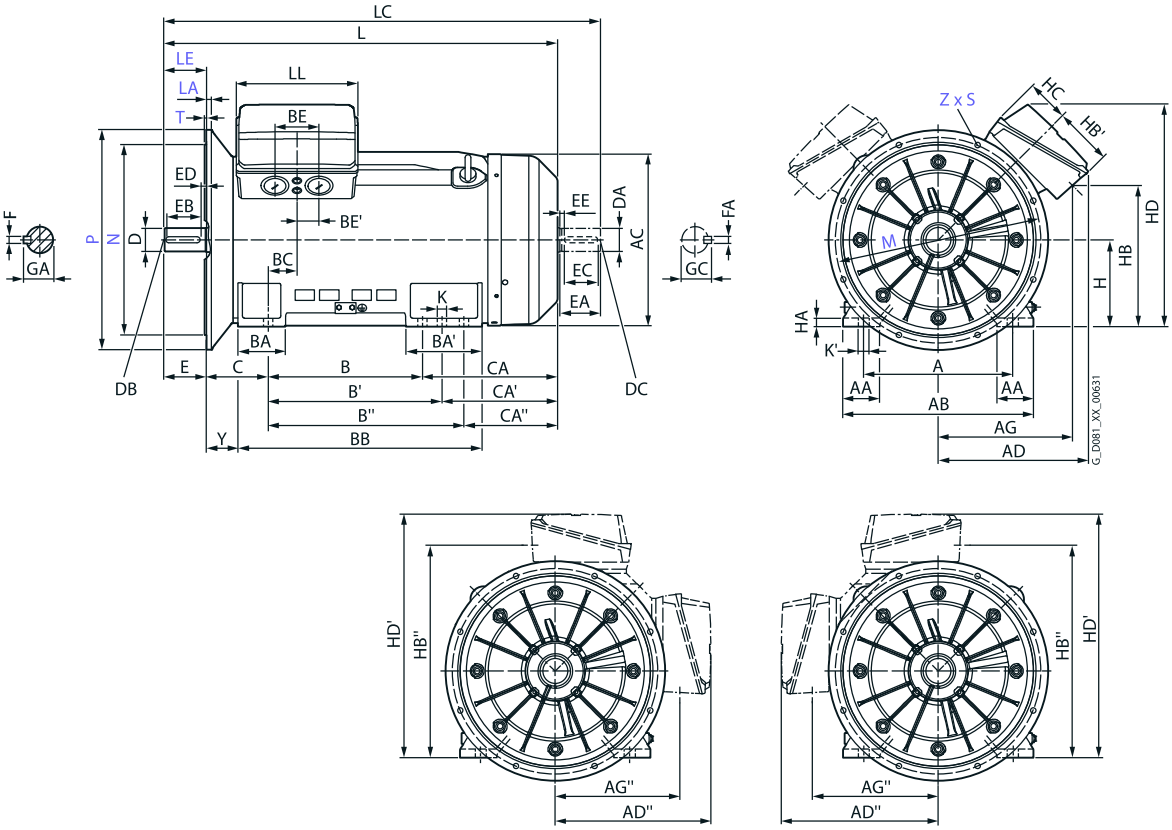

© Innomotics 2024

Innomotics SD standard motors next generation

IE4, IE3 – self-ventilated · Frame sizes 315 L to 450

Dimensional drawings

For motor		Dimension designation acc. to **IEC**																									
Frame size	Motor type 1LE5.0.-	No. of poles	A	AA	**AB**	AC	**AD**	AD'	AD''	AG	AG'	AG''	AH	B	B'	B''	BA	BA'	BB	BC	BE	BE'	C	CA	CA'	CA''	**H**	HA	HB
315 L	3AA6	2	508	120	**610**	641	**590**	565	540	553	459	434	890	457	508	–	176	227	648	139	120	60	216	469	418	–	**315**	50	412
	3AB6	4																											
	3AA7	2												508	560	630		298	770					498	446	376			
	3AB7	4																						528	476	406			
	3AC7	6					**542**			491	473	448									135	67.5							491
	3AC8	6					**590**			553	459	434									120	60		618	566	496			412
	3AD7	8					**543**			491	473	448									135	67.5		528	476	406			491
	3AD8	8																						618	566	496			
355 L	3BA3, 3BA4, 3BA5	2	610	150	**780**	718	**620**	657	644	550	542	530	940	630	710	800	198	315	998	116	240	120	254	553	473	383	**355**	49	574
	3BB., 3BC., 3BD.	4, 6, 8															194	311										35	

For motor		Dimension designation acc. to **IEC**													DE shaft extension							NDE shaft extension						
Frame size	Motor type 1LE5.0.-	No. of poles	HB'	HB''	HC	HD	HD'	HH	Y	K	K'	**L**	LC [1]	LL	D	DB	E	EB	ED	F	GA	DA	DC	EA	EC	EE	FA	GC
315 L	3AA6	2	336	749	167	800	855	355	146	28	35	**1282**	1427	327	65	M20	140	125	10	18	69	60	M20	140	125	10	18	64
	3AB6	4										**1312**	1457		85		170	140	25	22	90	70					20	74.5
	3AA7	2										**1362**	1507		65		140	125	10	18	69	60					18	64
	3AB7	4										**1422**	1567		85		170	140	25	22	90	70					20	74.5
	3AC7	6	225	763																								
	3AC8	6	336	749								**1512**	1657															
	3AD7	8	225	763								**1422**	1567															
	3AD8	8										**1512**	1657															
355 L	3BA3, 3BA4, 3BA5	2	247	885	188	911	999	370	130	35	42	**1577**	1722	519	75	M20	140	125	10	20	79.5	60	M20	140	125	10	18	64
	3BB., 3BC., 3BD.	4, 6, 8										**1607**	1782		95	M24	170	140	25	25	100	80		170	140	25	22	85.5

[1] In the low-noise version, a second shaft extension and/or mounted encoder is not possible.

© Innomotics 2024

Dimensional drawings

For motor		Dimension designation acc. to **IEC**																									
Frame size	Motor type 1LE5.3.-	No. of poles	A	AA	**AB**	AC	**AD**	AD'	AD''	AG	AG'	AG''	AH	B	B'	B''	BA	BA'	BB	BC	BE	BE'	C	CA	CA'	CA''	**H**	HA	HB
315 L	3AC6	6	508	120	**610**	624	**539**	–	–	374	–	–	–	457	508	–	177	227	648	22	110	55	216	524	473		**315**	50	–
	3AC7						**541**	565	539	493	480	448	890	508	560	630	176	298	770	139	135	67.5		528	476	406			491
	3AD6	8					**539**	–	–	374	–	–	–	457	508	–	177	227	648	22	110	55		374	323	–			–
	3AA6	2	508	120	**610**	641	**590**	565	540	553	459	434	890	457	508	–	176	227	648	139	120	60	216	469	418	–	**315**	50	412
	3AB6, 3AB7	4												508	560	630		298	770					528	476	406			
	3AA7	2																						498	446	376			
	3AC8	6																						618	566	496			
	3AC7, 3AD7	6					**543**			491	473	448									135	67.5		528	476	406			491
	3AD8	8																						618	566	496			
355 L	3BA3, 3BA4, 3BA5	2	610	150	**780**	718	**620**	657	644	550	542	530	940	630	710	800	198	315	998	116	240	120	254	553	473	383	**355**	49	574
	3BB., 3BC., 3BD.	4, 6, 8															194	311										35	
400	4AA	2	710	150	**860**	880	**785**	845	740	705	720	620	1110	900	–	–	220	220	1080	186	87.5	43.5	224	501	–	–	**400**	35	420
	4AB, 4AC, 4AD	4, 6, 8																											
450	4BA	2	800	180	**980**	970	**820**	895	775	740	770	655	1235	1000	–	–	260	260	1220	170	87.5	43.5	250	535	–	–	**450**	42	505
	4BB, 4BC, 4BD	4, 6, 8																											

For motor		Dimension designation acc. to **IEC**													DE shaft extension							NDE shaft extension						
Frame size	Motor type 1LE5.3.-	No. of poles	HB'	HB''	HC	HD	HD'	HH	Y	K	K'	**L**	LC [1]	LL	D	DB	E	EB	ED	F	GA	DA	DC	EA	EC	EE	FA	GC
315 L	3AC6	6						238	146	28	35	**1357**	1502		80		170	140	25	22	85	70					20	74.5
	3AC7	6	225	763	167	800	855	355				**1422**	1567	327	85						90							
	3AD6	8	–	–	–	–	–	238				**1217**	1362	299	80						85							
	3AA6	2	336	749	167	800	855	355	146	28	35	**1282**	1427	327	65	M20	140	125	10	18	69	60	M20	140	125	10	18	64
	3AB6, 3AB7	4										**1422**	1567		85		170	140	25	22	90	70					20	74.5
	3AA7	2										**1362**	1507		65		140	125	10	18	69	60					18	64
	3AC8	6										**1512**	1657		85		170	140	25	22	90	70					20	74.5
	3AC7, 3AD7	6, 8	225	763								**1422**	1567															
	3AD8	8										**1512**	1657															
355 L	3BA3, 3BA4, 3BA5	2	247	885	188	911	999	370	130	35	42	**1577**	1722	519	75	M20	140	125	10	20	79.5	60	M20	140	125	10	18	64
	3BB., 3BC., 3BD.	4, 6, 8										**1607**	1782		95	M24	170	140	25	25	100	80		170	140	25	22	85.5
400	4AA	2	400	1020	190	980	1140	410	134	35	42	**1795**	1940	519	80	M20	170	140	25	22	85	70	M20	140	125	10	20	74.5
	4AB, 4AC, 4AD	4, 6, 8										**1835**	2010		110	M24	210	180		28	116	90	M24	170	140	25	25	95
450	4BA	2	400	1105	190	1065	1225	420	140	42	50	**1955**	2100	519	90	M24	170	140	25	25	95	75	M20	140	125	10	20	79.5
	4BB, 4BC, 4BD	4, 6, 8										**1995**	2210		120		210	180		32	127	100	M24	210	180	25	28	106

[1] In the low-noise version, a second shaft extension and/or mounted encoder is not possible.

© Innomotics 2024

Innomotics SD standard motors next generation

IE4, IE3 – self-ventilated · Frame sizes 315 L to 450

Dimensional drawings

For motor		Dimension designation acc. to **IEC**																										
Frame size	Motor type 1LE5584-	No. of poles	A	AA	**AB**	AC	**AD**	AD'	AD''	AG	AG'	AG''	AH	B	B'	B''	BA	BA'	BB	BC	BE	BE'	C	CA	CA'	CA''	**H**	HA	HB
315 L	3AC7	6	508	120	**610**	624	**541**	–	–	493		–	–	508	560	–	176	298	770	139	135	675	216	528	476	406	315	50	491

For motor		Dimension designation acc. to **IEC**													DE shaft extension							NDE shaft extension						
Frame size	Motor type 1LE5584-	No. of poles	HB'	HB''	HC	HD	HD'	HH	Y	K	K'	**L**	LC [1]	LL	D	DB	E	EB	ED	F	GA	DA	DC	EA	EC	EE	FA	GC

For motor		Dimension designation acc. to **IEC**																										
Frame size	Motor type 1LE5.83-	No. of poles	A	AA	**AB**	AC	**AD**	AD'	AD''	AG	AG'	AG''	AH	B	B'	B''	BA	BA'	BB	BC	BE	BE'	C	CA	CA'	CA''	**H**	HA	HB
315 L	3AA6	2	508	120	**610**	641	**590**	565	540	553	459	434	890	457	508	-	176	227	648	139	120	60	216	469	418	-	**315**	50	412
	3AB6	4												508	560	630		298	770					498	446	376			
	3AA7	2																						528	476	406			
	3AB8	4																											
	3AC7	6					**543**			491	473	448									135	67.5							491
	3AC8	6					**590**			553	459	434									120	60		618	566	496			412
355 L	3BA.	2	610	150	**780**	718	**620**	657	644	550	542	530	940	630	710	800	198	315	998	116	240	120	254	553	473	383	**355**	49	574
	3BB3, 3BB4	4															194	311										35	
	3BB5	4																							568	478			
	3BC2, 3BC3	6																							473	383			
	3BC4	6																						648	568	478			
400	4AA	2	710	150	**860**	880	**785**	845	740	705	720	620	1110	900	–	–	220	220	1080	186	87.5	43.5	224	501	–	–	**400**	35	420
	4AB	4																											
	4AC, 4AD	6																											
450	4BA	2	800	180	**980**	970	**820**	895	775	740	770	655	1235	1000	–	–	260	260	1220	170	87.5	43.5	250	535	–	–	**450**	42	505
	4BB	4																											
	4BC, 4BD	6																											

For motor		Dimension designation acc. to **IEC**													DE shaft extension							NDE shaft extension						
Frame size	Motor type 1LE5.83-	No. of poles	HB'	HB''	HC	HD	HD'	HH	Y	K	K'	**L**	LC [1]	LL	D	DB	E	EB	ED	F	GA	DA	DC	EA	EC	EE	FA	GC
315 L	3AA6	2	336	749	167	800	855	355	146	28	35	**1282**	1427	327	65	M20	140	125	10	18	69	60	M20	140	125	10	18	64
	3AB6	4										**1362**	1507															
	3AA7	2										**1422**	1567		85		170	140	25	22	90	70					20	74.5
	3AB8	4										**1512**	1657															
	3AC7	6	225	763								**1422**	1567															
	3AC8	6	336	749								**1512**	1657															
355 L	3BA.	2	247	247	188	911	999	370	130	35	42	**1577**	1722	519	75	M20	140	125	10	20	79.5	60	M20	140	125	10	18	64
	3BB3, 3BB4	4										**1607**	1782		95	M24	170	140	25	25	100	80		170	140	25	22	85.5
	3BB5	4										**1702**	1877															
	3BC2, 3BC3	6										**1607**	1782															
	3BC4	6										**1702**	1877															
400	4AA	2	400	1020	190	980	1140	410	134	35	42	**1795**	1940	519	80	M20	170	140	25	22	85	70	M20	140	125	10	20	74.5
	4AB	4										**1835**	2010		110	M24	210	180		28	116	90	M24	170	140	25	25	95
	4AC, 4AD	6																										
450	4BA	2	400	1105	190	1065	1225	420	140	42	50	**1955**	2100	519	90	M24	170	140	25	25	95	75	M20	140	125	10	20	79.5
	4BB	4										**1995**	2210		120		210	180		32	127	100	M24	210	180	25	28	106
	4BC, 4BD	6																										

© Innomotics 2024

4

© Innomotics 2024

Innomotics VSD motors for converter operation

© Innomotics 2024

5

© Innomotics 2024

© Innomotics 2024

5 Innomotics VSD motors for converter operation

5/2 Introduction

5/2 Overview; Application; Design

5/3 Technical specifications

5/4 Synchronous reluctance motors for SINAMICS converters – VSD4000 line

5/4 Orientation

5/44 Article number code

5/46 Super Premium Efficiency

Aluminum series Innomotics GP 1FP1014

5/46 _ Line voltage 400 V, 50 Hz/480 V, 60 Hz/400 V, 87 Hz – self-ventilated, enclosed

Cast-iron series Innomotics SD 1FP1514

5/48 _ Line voltage 400 V, 50 Hz/460 V, 60 Hz/400 V, 87 Hz – self-ventilated, enclosed

5/52 Article No. supplements and special versions

Voltages

5/52 _ Aluminum series Innomotics GP 1FP1014

5/53 _ Cast-iron series Innomotics SD 1FP1514

Types of construction

5/54 _ Aluminum series Innomotics GP 1FP1014

5/58 _ Cast-iron series Innomotics SD 1FP1514

Motor protection

5/61 _ Aluminum series Innomotics GP 1FP1014

5/62 _ Cast-iron series Innomotics SD 1FP1514

Terminal box position

5/63 _ Aluminum series Innomotics GP 1FP1014

5/64 _ Cast-iron series Innomotics SD 1FP1514

Options

5/65 _ Aluminum series Innomotics GP 1FP1014

5/69 _ Cast-iron series Innomotics SD 1FP1514

5/73 Accessories

5/75 Dimensions

5/75 Notes on the dimensions/sheet generator

5/76 Aluminum series Innomotics GP
Frame sizes 80 M to 200 L

5/78 Cast-iron series Innomotics SD
Frame sizes 80 M to 200 L

5/82 Standard induction motors optimized for converter operation – VSD10 line

5/82 Orientation

5/92 Article number code

5/94 Standard Efficiency

Aluminum series Innomotics GP 1LE1092, self-ventilated, enclosed

5/94 _ Line voltage 400 V, 50 Hz/460 V, 60 Hz/400 V, 87 Hz

5/96 _ Line voltage 500 V, 50 Hz/575 V, 60 Hz/500 V, 87 Hz

5/98 _ Line voltage 690 V, 50 Hz/690 V, 87 Hz

Cast-iron series Innomotics SD 1LE1592, self-ventilated, enclosed

5/100 _ Line voltage 400 V, 50 Hz/460 V, 60 Hz/400 V, 87 Hz

5/104 _ Line voltage 500 V, 50 Hz/575 V, 60 Hz/500 V, 87 Hz

5/108 _ Line voltage 690 V, 50 Hz/690 V, 87 Hz

5/110 Article No. supplements and special versions

5/110 Voltages
Aluminum series/Cast-iron series

5/112 Types of construction
Aluminum series/Cast-iron series

5/120 Motor protection
Aluminum series/Cast-iron series

5/122 Terminal box position
Aluminum series/Cast-iron series

5/124 Options
Aluminum series/Cast-iron series

5/133 Accessories

5/135 Dimensions

5/135 Notes on the dimensions/sheet generator

5/136 Aluminum series Innomotics GP
Frame sizes 100 L to 160 L – self-ventilated

5/138 Cast-iron series Innomotics SD
Frame sizes 100 L to 315 L – self-ventilated

© Innomotics 2024

Innomotics VSD motors for converter operation

Overview

Innomotics GP/SD VSD motors optimized for converter operation (VSD = **V**ariable **S**peed **D**rive)

In addition to the standard motors optimized for line operation, Innomotics also offers two motor lines optimized for converters for variable-speed operation on a frequency converter:

- Innomotics VSD10 line – induction motors for converter operation
- Innomotics VSD4000 line – reluctance motors for operation with SINAMICS G120/S120 converters

The motors are optionally available with an aluminum housing (Innomotics GP) or with a rugged cast-iron housing (Innomotics SD).

Innomotics VSD motors are characterized by the following features:

- High energy efficiency:
  Because the Innomotics VSD motors are optimized for operation with SINAMICS converters, the system power losses are low and the energy efficiency therefore high.
  In particular, the Innomotics VSD4000 line synchronous reluctance motors in conjunction with optimized control algorithms result in excellent loss-optimized operation in the speed setting range with a full and partial load, and are superior to an induction motor system that has comparable nominal efficiency, especially in the partial-load range.
- Optimized investment costs:
  The optimized motor active part/power module allocation results in low capital investment costs. The motors and frequency converters are optimally harmonized and coordinated with one another. No power unit upgrade is therefore required.
  This applies in particular to the Innomotics VSD10 line motors on account of their optimized motor design.
- Low space requirement, low weight:
  The high power density and compact design ensure low space requirements combined with low weight.
- Very rugged and reliable:
  High availability using the standard protection functions for converter operation.
  As a result of the optimized insulation system, a high degree of reliability is obtained for four-quadrant operation with SINAMICS converters. Innomotics VSD10 motors also have insulated bearings at the non-drive end (NDE) in frame sizes 280 and 315.
- Fast and simple commissioning by transferring a motor code on the frequency converter.
- Flexible in use:
  Innomotics VSD line motors are designed as standard for operation with a 50 Hz, 60 Hz and 87 Hz characteristic.
- Wide range of options:
  By consistently utilizing the 1LE1 standard motor platform, almost all options of the 1LE1 line motors can also be used for the Innomotics VSD line motors.
- High level of compatibility:
  Line and converter motors can be easily interchanged due to their identical dimensions and customer interfaces.
  The connection and operating philosophy is exactly the same as for 1LE1 line motors.
- International applicability:
  The motors are not subject to any minimum efficiency requirements for specific countries.

Application

The Innomotics GP/SD VSD motors can be deployed in all industries and sectors, e.g. paper, steel, energy, chemistry, water/waste water.

The wide field of applications that can be addressed includes, for example, the following:

- Pumps
- Fans
- Compressors
- Cranes
- Conveyor belts

Design

The Innomotics GP/SD VSD motors are based on the platform of the Innomotics 1LE1 motor type series. For this reason, the principal design is the same as for the 1LE1 line motors – the mechanical parts are identical.
The motors are adapted to the converter by appropriately dimensioning the active part and VSD-specific rating plate data.

Moreover, a large number of the variations available in the Innomotics 1LE1 motors (types of construction, motor protection, terminal box position, and options) are also available for the VSD motors.

Innomotics VSD4000 line	Innomotics VSD10 line
Use in VSD applications with high dynamic requirements	Use in VSD applications
Focus on low operating costs	Focus on low investment costs
Very low system power losses due to the reluctance principle and optimum coordination of the motor with the converter	Low system power losses due to optimum coordination of the motor with the converter
Optimized for operation with SINAMICS G120 and S120	Optimized for use with SINAMICS G120, G130, G150
36 month warranty	_ 12 month warranty for Innomotics GP _ 24 month warranty for Innomotics SD (optionally expandable)

© Innomotics 2024

Technical specifications

Brief overview of the general technical specifications for Innomotics VSD4000 line reluctance motors

Air-cooled, enclosed version with self-ventilation [1]	
Operation	Converter operation – VSD
Power at 50 Hz [2]	0.55 ... 45 kW
Rated speed	1500 rpm, 1800 rpm and 2610 rpm 3000 rpm, 3600 rpm
Voltages	50 Hz line supplies: 400 V 60 Hz line supplies: 460 V
Cooling method	IC411, self-ventilated
Frame size	Innomotics GP: 80/112 ... 200 Innomotics SD: 80/112 ... 225
Degree of protection [3]	IP55
Housing	Aluminum or cast-iron version
Load characteristic	$T \sim n^2$, T = const.
Motor type	Innomotics GP: 1FP10.4 Innomotics SD: 1FP15.4

Brief overview of the general technical specifications for Innomotics VSD10 line standard motors for converter operation

Air-cooled, enclosed version with self-ventilation [1]	
Operation	Converter operation – VSD
Power at 50 Hz	2.2 ... 200 kW (1500 rpm) 3 ... 90 kW (3000 rpm)
Rated speed	1500 rpm, 1800 rpm and 2610 rpm [4] 3000 rpm, 3600 rpm and 5220 rpm [4]
Voltages	50 Hz line supplies: 400 V, 500 V, 690 V 60 Hz line supplies: 460 V, 600 V
Cooling method	IC411, self-ventilated
Frame size	Innomotics GP: 100 ... 160 Innomotics SD: 100 ... 315
Degree of protection [3]	IP55
Housing	Aluminum or cast-iron version
Load characteristic	$T \sim n^2$, T = const.
Motor type	Innomotics GP: 1LE1092 Innomotics SD: 1LE1592

[1] Forced ventilation optionally available.
[2] Rated speed 1500 rpm.
[3] Other degrees of protection optionally available.
[4] 87 Hz characteristic not available for all frame sizes.

© Innomotics 2024

Synchronous reluctance motors for SINAMICS converters – VSD4000 line

Overview

Innomotics GP/SD VSD4000 line motor series: 1FP10, 1FP15

As a result of their flexibility and the wide range of versions, Innomotics GP/SD VSD4000 line motors are especially suitable for sectors and industries, where the focus is on minimum lifecycle costs (TCO) and/or operation with a high dynamic performance.

Versions of the
Innomotics GP/SD VSD4000 line motor series: 1FP10, 1FP15

The motors have compact dimensions in a surface-cooled, enclosed version with self-ventilation. They have been specifically designed for converter operation.

1FP10 General Purpose for converter operation

- Four-quadrant converter operation, optimally harmonized with the SINAMICS G120, PM240-2 and S120 (ALM, BLM) drive system.
- IP55 degree of protection
- IC411 cooling method, self-ventilated
  (IC416 cooling method, force-ventilated version optional)
- Housing: Aluminum
- Frame sizes: 80/112 to 200 [1)]

1FP15 Severe Duty for converter operation

- Four-quadrant converter operation, optimally harmonized with the SINAMICS G120, PM240-2 and S120 (ALM, BLM) drive system.
- IP55 degree of protection
- IC411 cooling method, self-ventilated
  (IC416 cooling method, force-ventilated version optional)
- Housing: Cast iron
- Frame sizes: 80/112 to 200

Benefits

5

The Innomotics GP/SD VSD4000 line motor series has been specifically developed for operation with SINAMICS G120 converters.

- The synchronous-reluctance motors in conjunction with optimized closed-loop control algorithms result in an excellent, loss-optimized operating behavior in the speed control range at full and partial load. This system is superior to an induction motor-based system with comparable nominal efficiencies, especially in the partial load range.
- As a result of their low intrinsic moment of inertia, synchronous-reluctance motors are also especially suitable for operating modes demanding a high dynamic performance.
- The optimized motor active part/power module allocation results in low capital investment costs.
- The high power density and compact design ensure low space requirements combined with low weight.
- The motors and converters are optimally harmonized and coordinated with one another. It is not therefore necessary to upgrade the power unit.
- Innomotics GP motors with aluminum housing or Innomotics SD motors with rugged cast-iron housing are available.
- High availability using the standard protection functions for converter operation
  (Pt100/Pt1000 resistance thermometers).
- As a result of the optimized insulation system, a high degree of reliability is obtained for four-quadrant operation with SINAMICS converters.
- Fast and simple commissioning by transferring a motor code into the converter.
- Standard warranty period for synchronous-reluctance motors 36 months.

More power ratings

Innomotics GP/SD VSD4000 line motors are designed as standard for operation with a 50 Hz, 60 Hz, and 87 Hz characteristic [2)]. No special ordering option is required.

Optimized for converter operation

The new motor series has been optimized for operation with SINAMICS G120 converters with regard to converter output currents and voltage utilization. Four-quadrant operation is possible with the SINAMICS G120, PM240-2, and S120 (ALM, BLM) converter families (for line voltages up to 480 V 3 AC).

High degree of flexibility

By consistently utilizing the 1LE1 standard motor platform, almost all options of the 1LE1 line motors can also be used for the Innomotics GP/SD VSD4000 line series.

[1)] For the motor type 1FP10 of the Innomotics GP series, frame sizes 180 and 200 on request.

[2)] With firmware V4.7 SP3, only 1500 rpm can be programmed.

© Innomotics 2024

Benefits

Known and established design

Line and converter motors can be easily interchanged due to their identical dimensions and customer interfaces. The connection and operating philosophy is exactly the same as for 1LE1 line motors.

International applications

The motors are not subject to any minimum efficiency requirements for specific countries. As a consequence, they can be operated without additional MEPS certificates, also in the USA, for example.

System components

System components required:

- Innomotics 1FP1 synchronous-reluctance motor
- SINAMICS G120 converter PM240-2 Power Module or SINAMICS S120 (ALM, BLM) converter

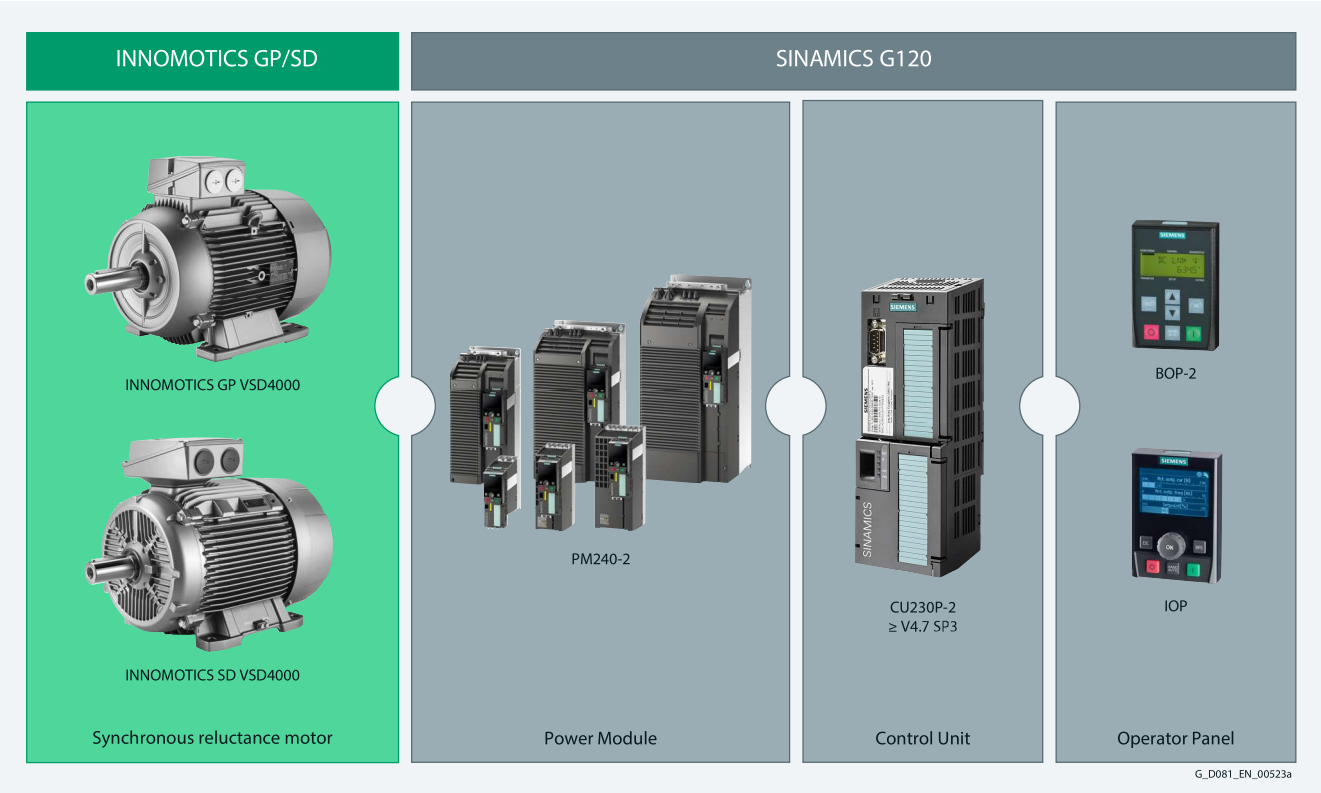

Example configuration Innomotics GP/SD VSD4000 with SINAMICS G120

Application

As a result of the wide range of options, the Innomotics GP/SD VSD4000 line motor series can be used in all industrial areas and sectors. Paper, steel, energy, chemical, water/waste water are examples of some typical sectors.

Various flange and foot-mounted designs according to EN 60034-7 are available. IP55 is the standard degree of protection (other degrees of protection optionally available).

The wide field of applications that can be addressed includes, for example, the following:

- Pumps
- Fans
- Compressors
- Cranes
- Conveyor belts
- Processing machines that require synchronous operation (e.g. in the textile industry)

© Innomotics 2024

Synchronous reluctance motors for SINAMICS converters – VSD4000 line

Design

The Innomotics GP/SD VSD4000 line motors are based on the 1LE1 platform. The basic design of the Innomotics GP/SD VSD4000 line motors therefore corresponds to the 1LE1 line motors. The mechanical parts are identical. The motors are adapted to the converter by appropriately dimensioning the active part.

Technical specifications

Overview of technical specifications

This table lists the most important technical specifications.

Type of motor	IEC low-voltage three-phase synchronous-reluctance motors
Connection types	Star/delta connection The connection used depends on the particular load characteristic.
No. of poles	4
Frame sizes	80/112 ... 225
Rated power	4-pole: 0.55 ... 45 kW (50 Hz characteristic); 0.63 ... 52 kW (60 Hz characteristic), 0.9 ... 78 kW (87 Hz characteristic)
Frequencies	Characteristics for 50 Hz, 60 Hz and 87 Hz
Versions	Air-cooled, enclosed version: _ with self ventilation _ with forced ventilation (optional) Innomotics GP motors in an aluminum version, frame sizes 80/112 ... 200 Innomotics SD motors in a cast-iron version, frame sizes 80/112 ... 225
System efficiency	IES2 in accordance with EN 50598 (system with SINAMICS G120 converter, PM240-2)
Marking	Only permitted for converter operation. As converter motors, IE classification according to IEC 60034-30-1 is not required.
Rated speed	1500 rpm, 1800 rpm and 2610 rpm (up to frame size 200) 3000 rpm, 3600 rpm (frame sizes 180 and 200)
Rated torque	3.5 ... 191 Nm (50 Hz characteristic); 3.3 ... 183 Nm (60 Hz characteristic), 3.3 ... 176 Nm (87 Hz characteristic)
Insulation of the stator winding in accordance with EN 60034-1 (IEC 60034-1)	Temperature class F, utilized acc. to B Reinforced insulation system (Advanced)
Degree of protection according to EN 60034-5 (IEC 60034-5)	IP55 as standard Air-cooled, enclosed version
Cooling according to EN 60034-6 (IEC 60034-6)	_ Standard: Self-ventilated (IC411) _ Optional: Forced-air cooled (IC416) (132 ... 200)
Permissible coolant temperature and installation altitude	−20 ... +40 °C as standard, installation altitude up to 1000 m above sea level
Standard voltages according to EN 60038 (IEC 60038)	50 Hz line supplies: 400 V, 60 Hz line supplies: 480 V The rated motor voltage required is listed in the "Selection and ordering data" for the required motor.
Type of construction according to EN 60034-7 (IEC 60034-7)	_ Without flange: IM B3, IM B6, IM B7, IM B8, IM V5, IM V6 _ With flange: IM B35, IM V1, IM V3
Paint finish Suitability of paint finish for climate group according to IEC 60721, Part 2-1	As standard: color RAL 7030 stone gray
Vibration severity grade according to EN 60034-14 (IEC 60034-14)	Grade A (normal)
Shaft extension according to DIN 748 (IEC 60072)	Balancing type: half-key balancing as standard
Sound pressure level according to EN ISO 1680 (tolerance +3 dB)	The corresponding sound pressure level is listed in the "Selection and ordering data" for the required motor.
Weights	The corresponding weight is listed in the "Selection and ordering data" for the required motor.
Modular mounting concept	Optional brake and separately driven fan according to ordering data
Options	See "Article No. supplements and special versions"

© Innomotics 2024

Technical specifications

Rating plate

In accordance with EN 60034-1, the approximate total weight is specified on the rating plate. The standard version of the rating plate is the international version in English.

For straightforward and fast commissioning with SINAMICS G converters, a motor code number is stamped on the rating plate (CODE).

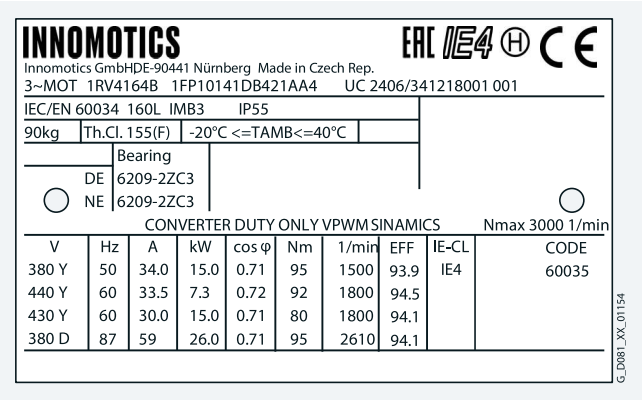

Example of a Innomotics GP VSD4000 line rating plate, 1FP10

Motors specially designed for converter operation

These motors have been specifically designed for converter operation. The catalog data is applicable for operation on the converter of the SINAMICS G120 series (PM240-2/PM240P-2) and SINAMICS S120 (PM240-2 and Booksize Motor Modules).

SINAMICS G120 system requirements:

- SINAMICS G120, PM240-2/PM240P-2 Power Module, CU230P-2 Control Unit
- V4.7.6 and higher
- The converter is operated with a rated pulse frequency of at least 4 kHz.
- The converter can provide the rated voltage as listed in the catalog.

For SINAMICS G120 converters (from firmware version 4.7) the Innomotics GP/SD VSD4000 line series can be selected in the SINAMICS converter via the STARTER software or the operator panel at the converter (Basic Operator Panel (BOP), Intelligent Operator Panel (IOP)) as motor category and can be addressed using the motor code number.

SINAMICS S120 system requirements:

- SINAMICS S120, PM240-2 Power Module and CU310
- SINAMICS S120 Booksize Motor Module and CU320-2
- FW 4.8 and higher

Rated voltage

The tolerance for the rated voltage is in accordance with EN 60034-1. A rated voltage range is not specified. The rated motor voltages are selected so that when operated with a SINAMICS G120 converter, the available voltage is optimally utilized.

Insulation

The motors can be operated with SINAMICS G/S converters up to line voltages of 480 V when the permissible voltage peaks are complied with ($\hat{U}_{LL} \leq 3200$ V, $\hat{U}_{LE} \leq 2800$ V).

For converter operation with the power ratings specified in the catalog, the motors can be utilized corresponding to thermal class 155 (F) (service factor 1.2).

Preferred supply system configurations are TT systems and TN systems with neutral-point grounding. In the case of a fault when connected to an IT system (ground fault), the insulation is excessively stressed. In this case, the process should be terminated as quickly as possible ($t < 2$ h), and the fault resolved. We do not recommend operation in corner-grounded TN systems.

Noise

The maximum sound pressure levels should be taken from the "Selection and ordering data".

© Innomotics 2024

Technical specifications

Separately driven fan

For the technical specifications of the separately driven fans, see page 1/95 "Technical specifications of separately driven fans".

Bearings

For converter operation, as a result of the basic principle employed, electrical bearing stress is created through the bearing lubricant film due to a voltage that is capacitively coupled in.

The physical cause of this is the common-mode voltage at the converter output that is inherent in the control method for a converter:
The sum of the three phase voltages is – in contrast to pure line operation – not equal to zero at every point in time.

In order to apply currents to the motor which are sinusoidal as far as possible (resulting in smoother running, lower oscillation torques, and lower stray losses), a high pulse frequency is required for the converter's output voltage. The related (very steep) switching edges of the converter output voltage (and also, therefore, of the common-mode voltage) cause correspondingly high capacitive currents and voltages on the machine's internal capacitances.

In the worst-case scenario, the capacitive voltage induced via the bearing can lead to random arcing through the bearing lubricating film, thus causing premature bearing aging or damage.

This physical effect, which occurs in isolated cases, has mostly been observed in connection with larger motors.

EMC-compliant installation of the drive system is a basic prerequisite for preventing premature bearing damage via bearing currents.

The most important measures for reducing bearing currents are:

- Insulated motor bearing at the NDE.

Recommended from frame size 225 and higher:

- Use cables with a symmetrical cable cross-section:

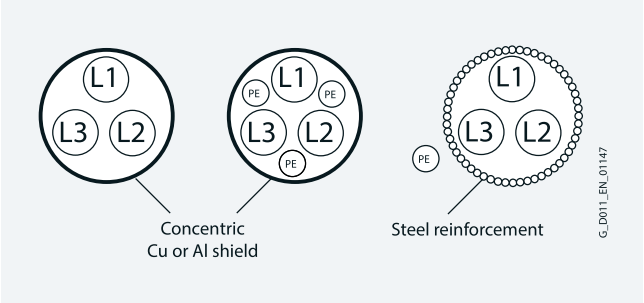

- Preference given to a line supply with isolated neutral point (IT system).
- Using grounding cables with low impedance over a wide frequency range (DC up to approximately 70 MHz): for example, braided copper ribbon cables, HF finely stranded wires.
- Separate HF equipotential-bonding cable between motor housing and driven machine.
- Separate HF equipotential-bonding cable between motor housing and converter PE busbar.
- 360° HF contacting of the cable shield on the motor housing and the converter PE busbar. This can be achieved using EMC screwed glands on the motor side and EMC shield clips on the converter side, for example.

© Innomotics 2024

Technical specifications

Torque limits (continuous duty)

The thermal torque limit characteristics of the Innomotics GP/SD VSD4000 line define the maximum load torque for uninterrupted duty (S1) over the complete speed control range. The characteristics are different for all of the cooling methods. The speed control range is limited by the mechanical speed limit, which depends on the motor's mechanical design.

The following statements are valid for the following diagrams:

- Thermally, from $^1/_{10}$ of the rated speed up to the full rated speed, the rated torque and the curve of the suitable power unit are possible, utilizing the thermal class 155 (temperature class F).
- The curves of the next largest power unit and the maximum power curve can be achieved in continuous-operation periodic duty (S6 - x %), and briefly in S9 duty, provided that $P_{2\,(S9)} = P_{2\,N}$ is not exceeded.

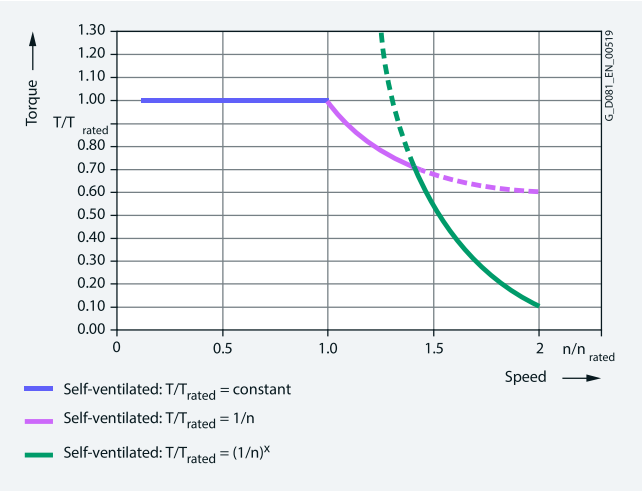

Torque limit for Innomotics GP/SD VSD4000 line self-ventilated

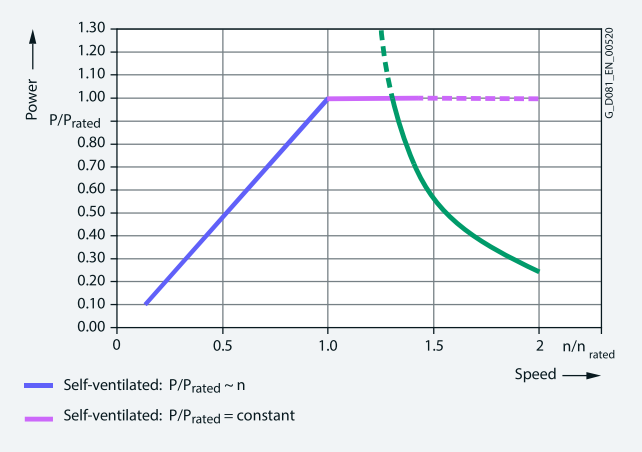

Power limit for Innomotics GP/SD VSD4000 line self-ventilated

Maximum overload torques/thermal limit characteristic

The short-time maximum overload torque output from the motor is defined by the limit characteristic and the available converter output current.

Thermally, the motors can be permanentl overloaded according to the F/F characteristic, see limit torque characteristics in the following catalog pages. The speed control range is limited by the mechanical speed limit, which depends on the motor's mechanical design.

© Innomotics 2024

Technical specifications

The torque and power characteristics for converter configuration for the Innomotics GP/SD 1FP1.14-0DB2 motor, frame size 80 with the particular motor voltage and circuit:

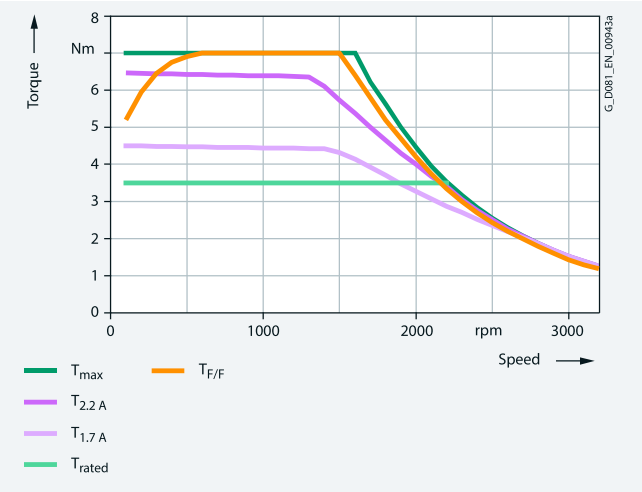

Torque limit for 380 VY (50 Hz characteristic)

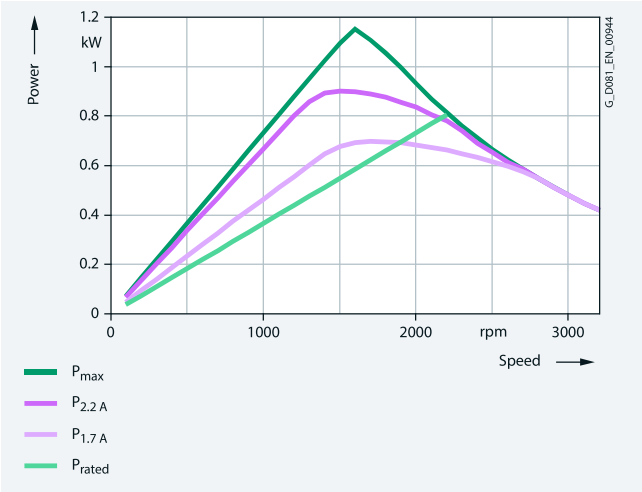

Power limit for 380 VY (50 Hz characteristic)

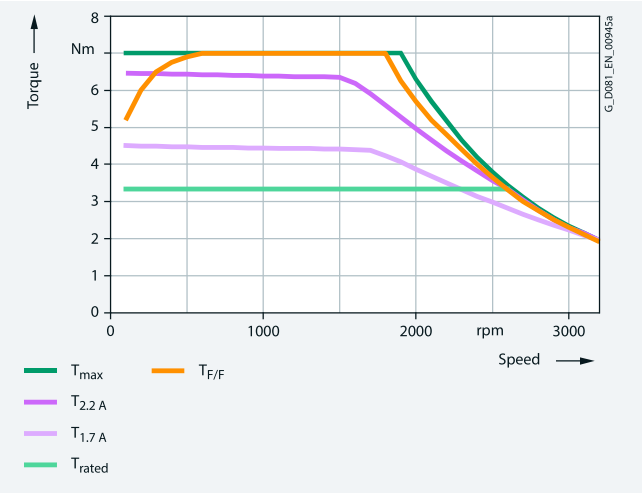

Torque limit for 440 VY (60 Hz characteristic)

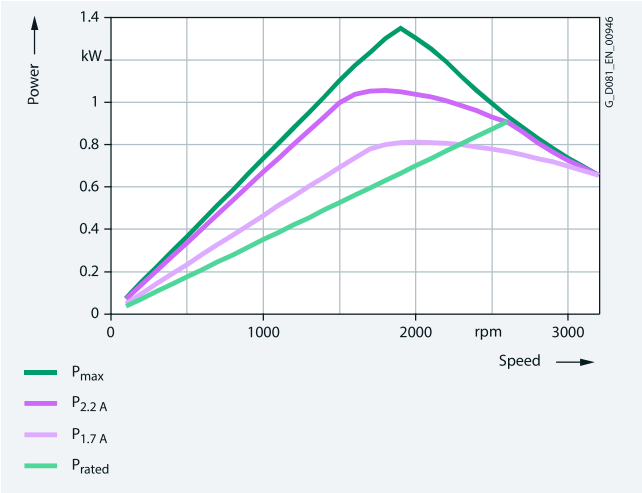

Power limit for 440 VY (60 Hz characteristic)

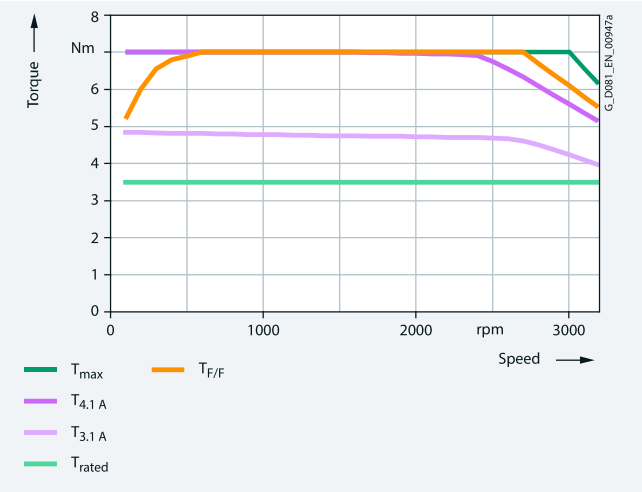

Torque limit for 380 VΔ (87 Hz characteristic)

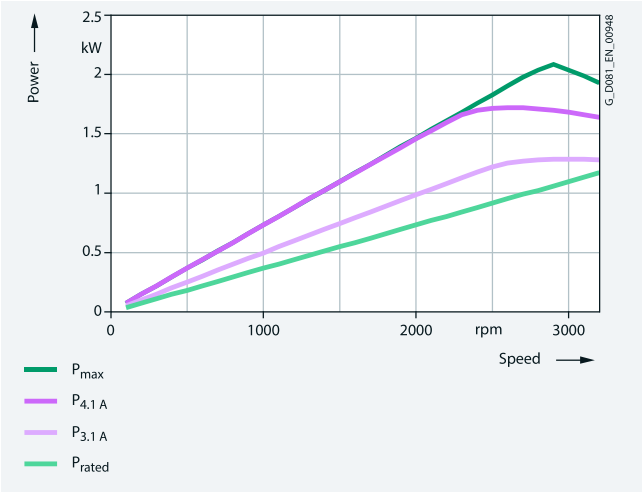

Power limit for 380 VΔ (87 Hz characteristic)

© Innomotics 2024

Technical specifications

The torque and power characteristics for converter configuration for the Innomotics GP/SD 1FP1.14-0DB3 motor, frame size 80 with the particular motor voltage and circuit:

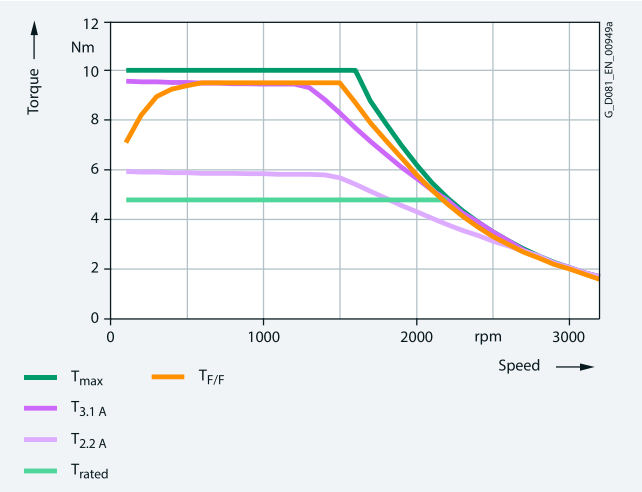

Torque limit for 380 VY (50 Hz characteristic)

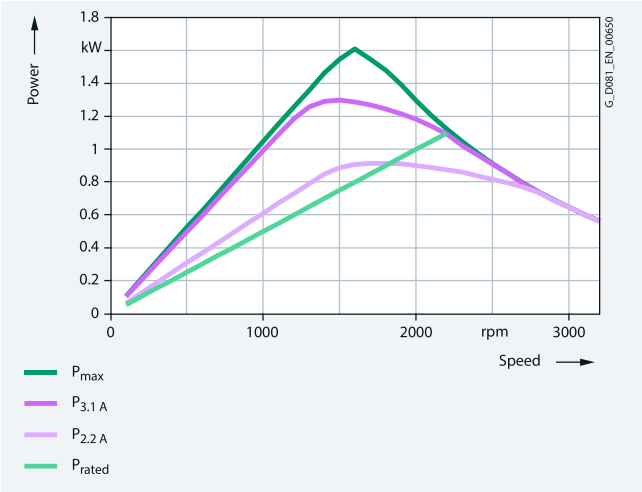

Power limit for 380 VY (50 Hz characteristic)

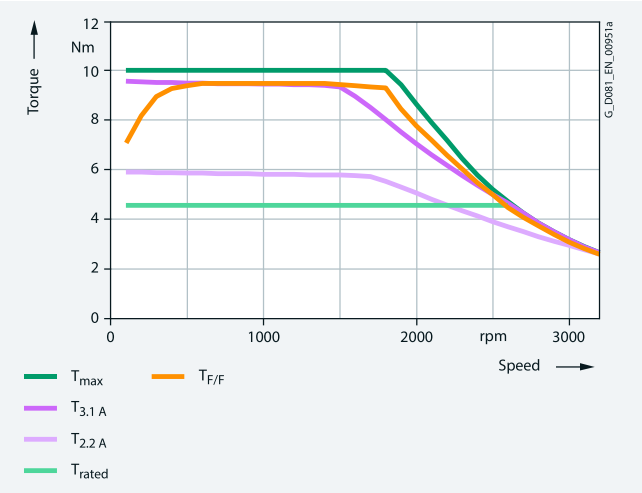

Torque limit for 440 VY (60 Hz characteristic)

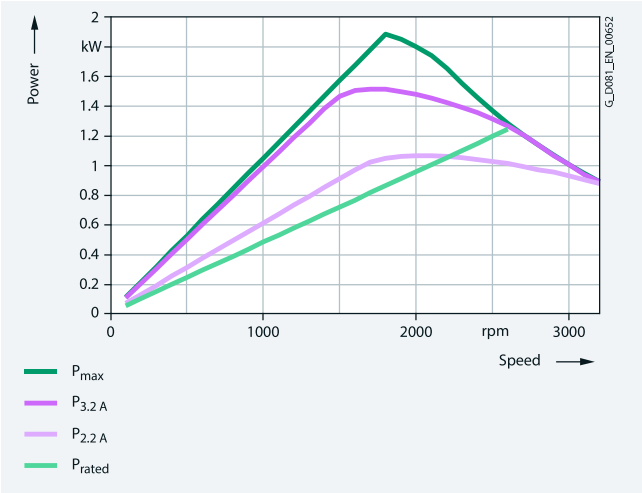

Power limit for 440 VY (60 Hz characteristic)

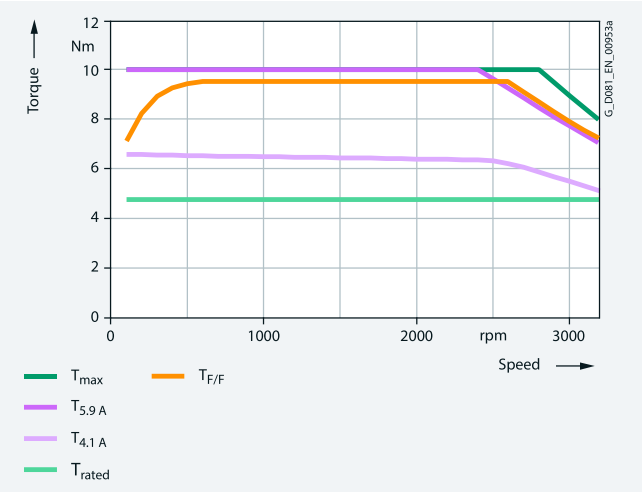

Torque limit for 380 VΔ (87 Hz characteristic)

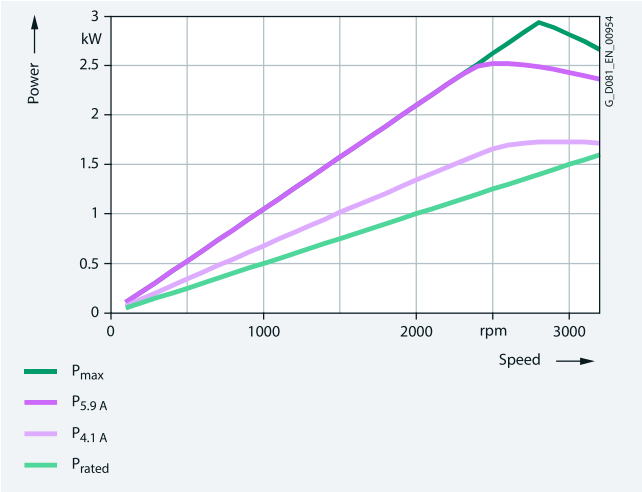

Power limit for 380 VΔ (87 Hz characteristic)

© Innomotics 2024

Synchronous reluctance motors for SINAMICS converters – VSD4000 line

Technical specifications

The torque and power characteristics for converter configuration for the Innomotics GP/SD 1FP1.14-0DF2 motor, frame size 80 with the particular motor voltage and circuit:

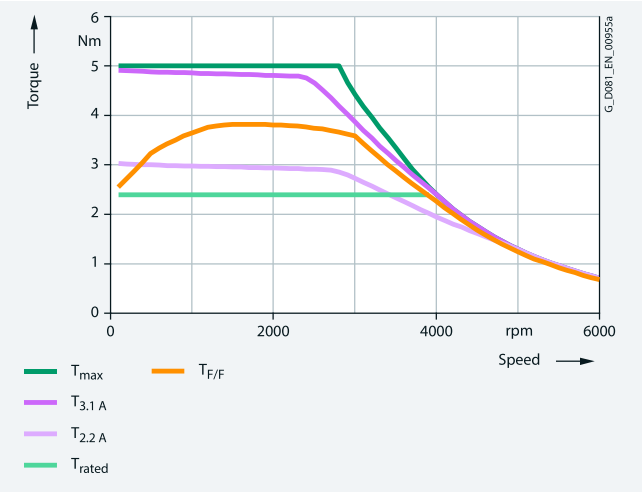

Torque limit for 380 VY (100 Hz characteristic)

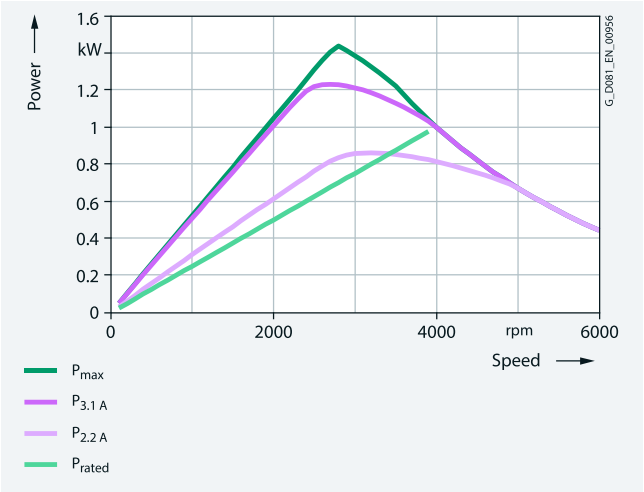

Power limit for 380 VY (100 Hz characteristic)

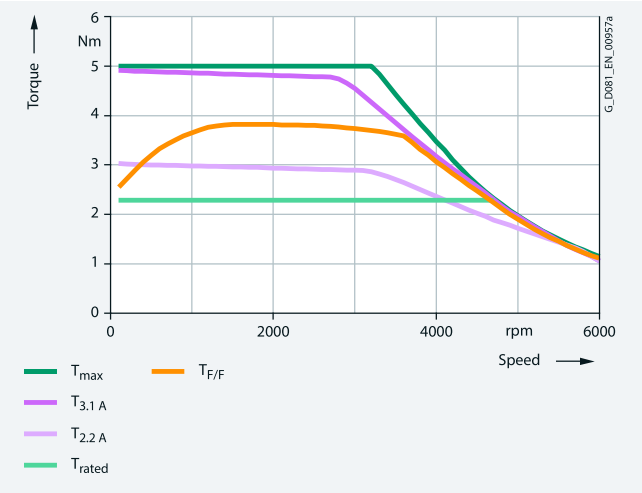

Torque limit for 440 VY (120 Hz characteristic)

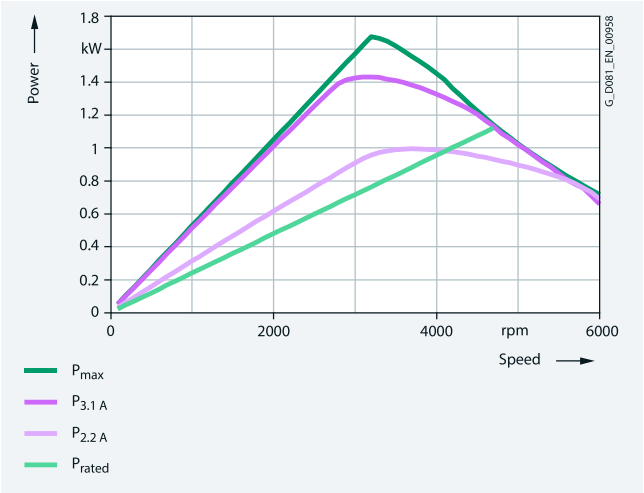

Power limit for 440 VY (120 Hz characteristic)

© Innomotics 2024

Technical specifications

The torque and power characteristics for converter configuration for the Innomotics GP/SD 1FP1.14-0DF3 motor, frame size 80 with the particular motor voltage and circuit:

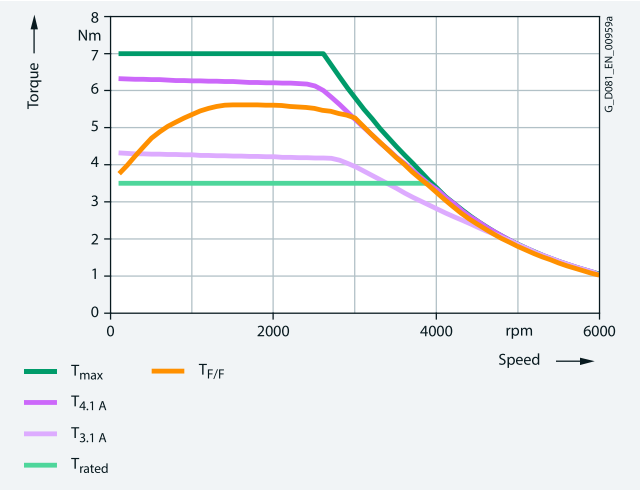

Torque limit for 380 VY (100 Hz characteristic)

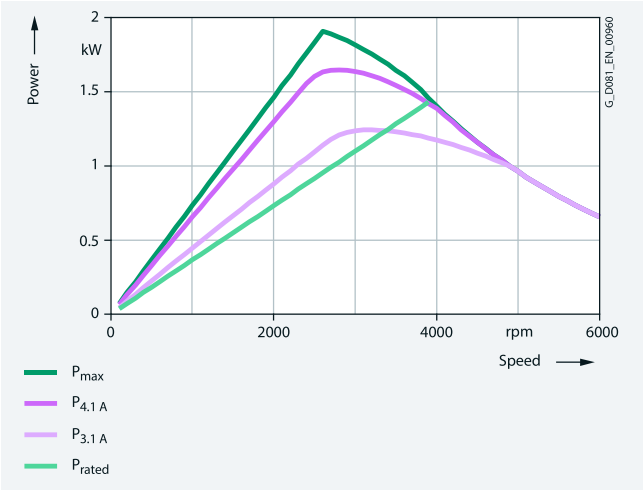

Power limit for 380 VY (100 Hz characteristic)

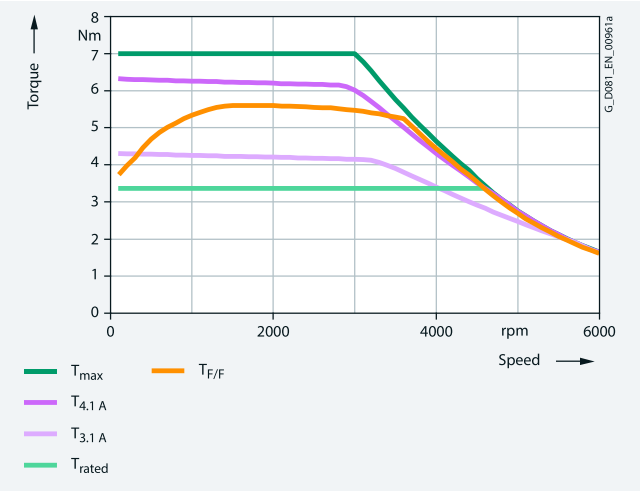

Torque limit for 440 VY (120 Hz characteristic)

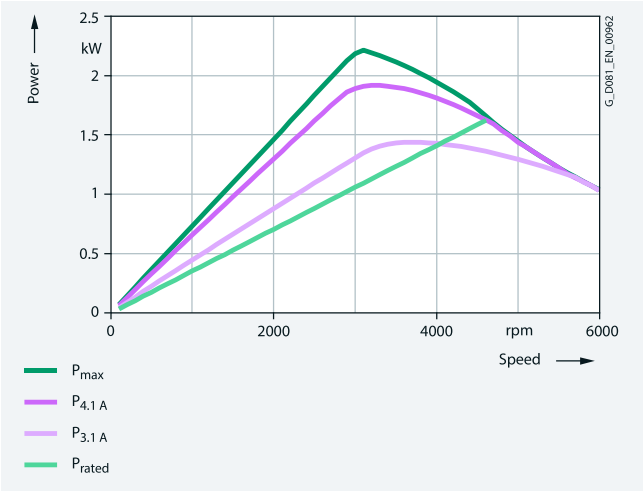

Power limit for 440 VY (120 Hz characteristic)

© Innomotics 2024

Technical specifications

The torque and power characteristics for converter configuration for the Innomotics GP/SD 1FP1.14-0EB0 motor, frame size 90 with the particular motor voltage and circuit:

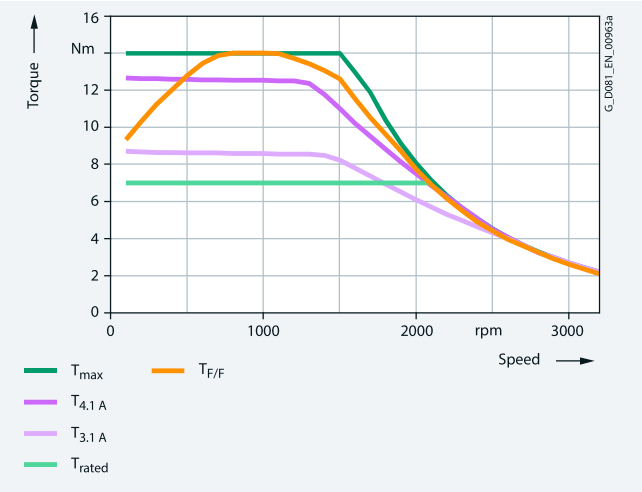

Torque limit for 380 VY (50 Hz characteristic)

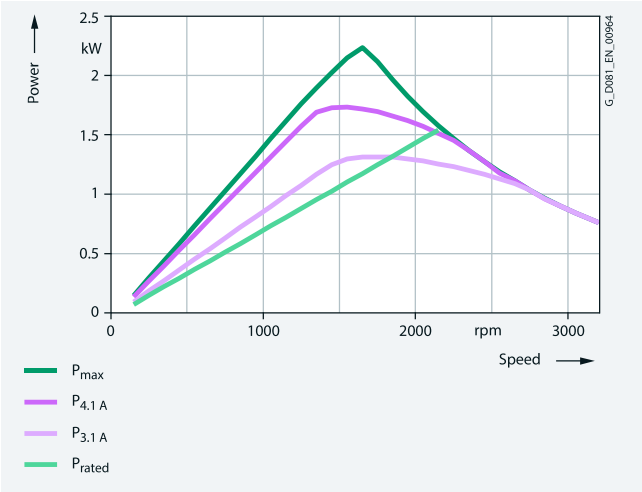

Power limit for 380 VY (50 Hz characteristic)

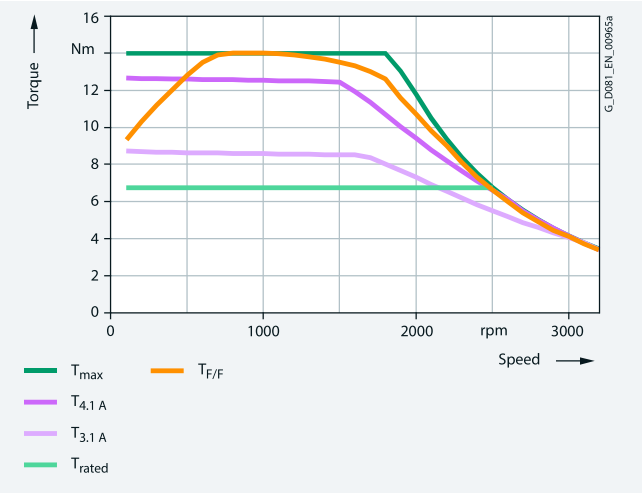

Torque limit for 440 VY (60 Hz characteristic)

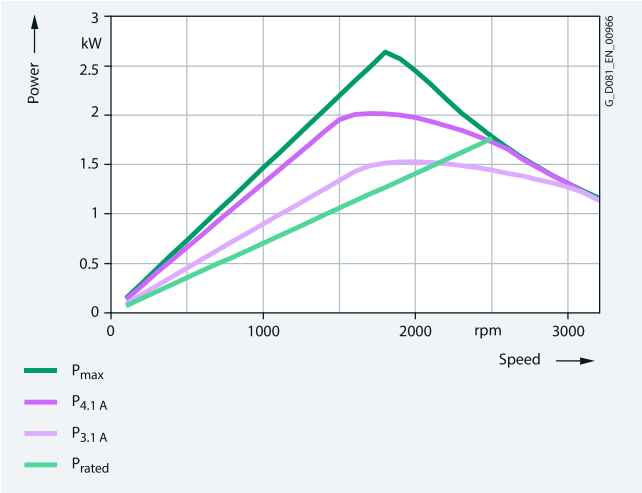

Power limit for 440 VY (60 Hz characteristic)

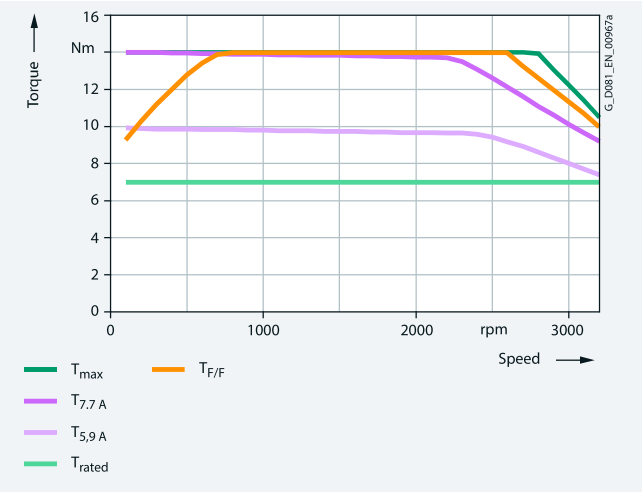

Torque limit for 380 VΔ (87 Hz characteristic)

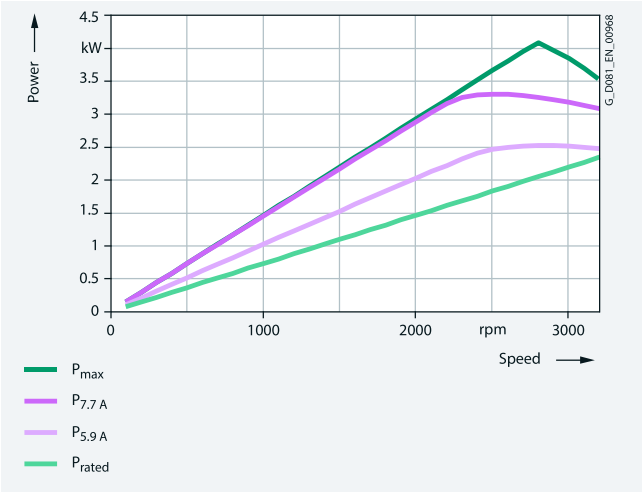

Power limit for 380 VΔ (87 Hz characteristic)

© Innomotics 2024

Technical specifications

The torque and power characteristics for converter configuration for the Innomotics GP/SD 1FP1.14-0EB4 motor, frame size 90 with the particular motor voltage and circuit:

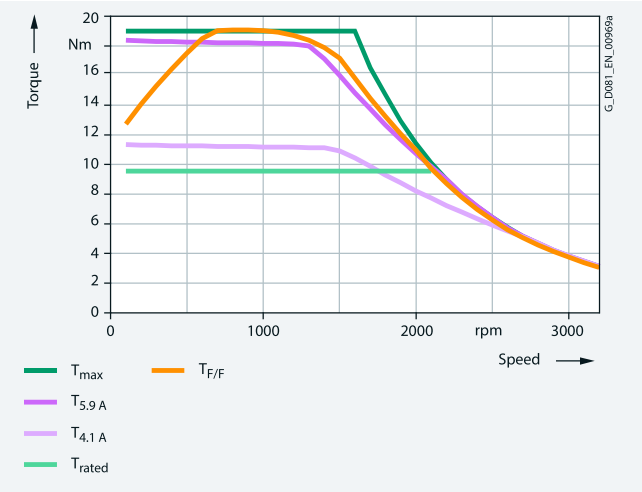

Torque limit for 380 VY (50 Hz characteristic)

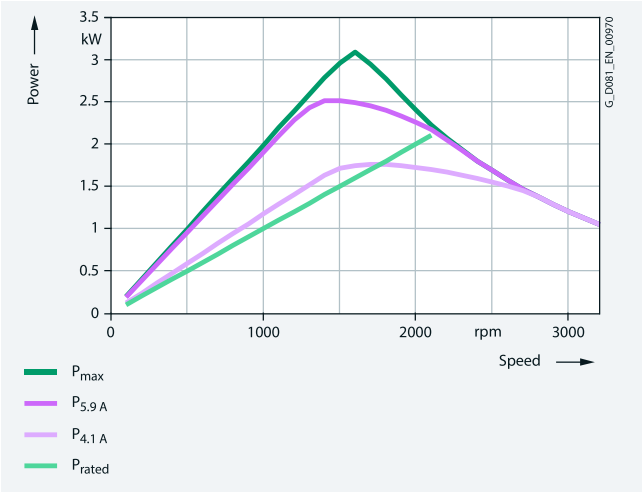

Power limit for 380 VY (50 Hz characteristic)

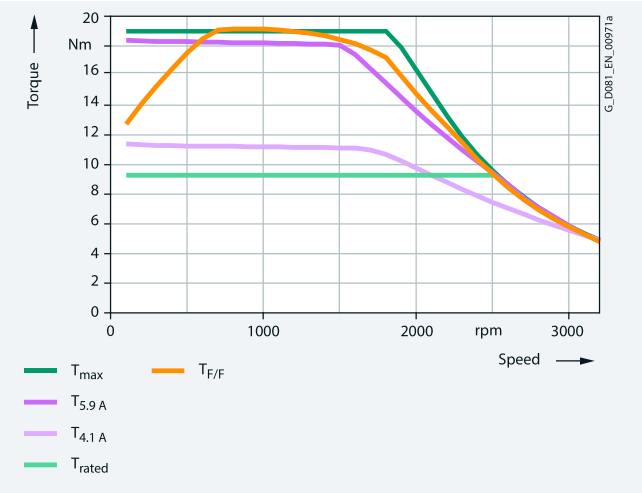

Torque limit for 440 VY (60 Hz characteristic)

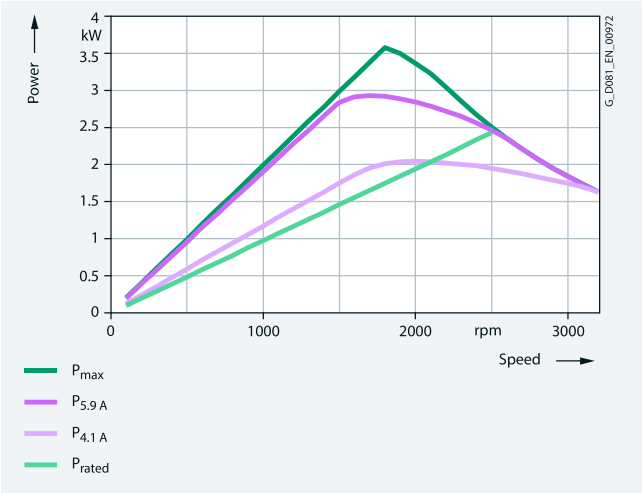

Power limit for 440 VY (60 Hz characteristic)

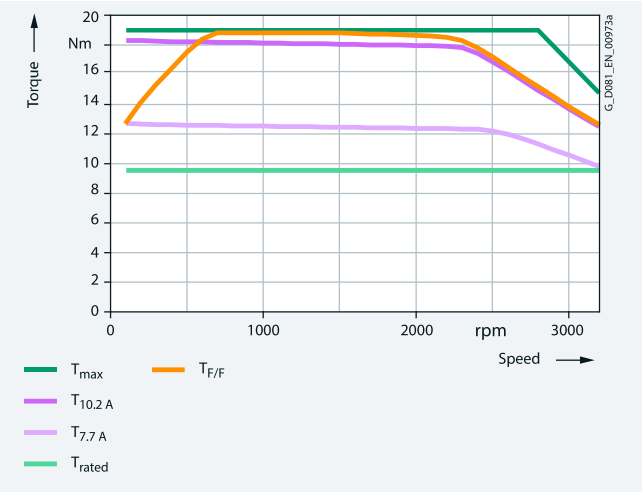

Torque limit for 380 VΔ (87 Hz characteristic)

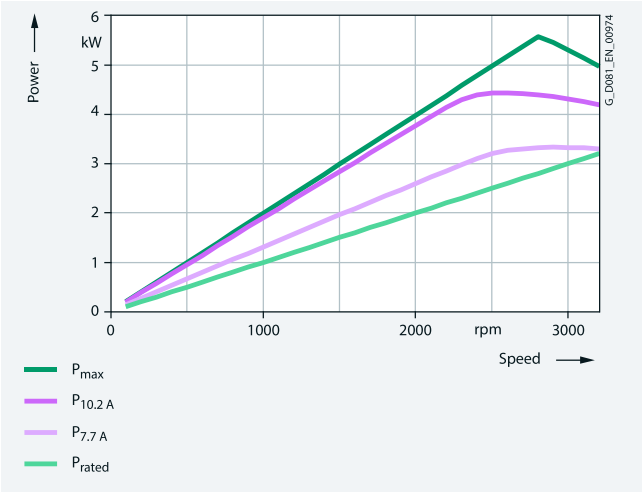

Power limit for 380 VΔ (87 Hz characteristic)

© Innomotics 2024

Technical specifications

The torque and power characteristics for converter configuration for the Innomotics GP/SD 1FP1.14-0EF0 motor, frame size 90 with the particular motor voltage and circuit:

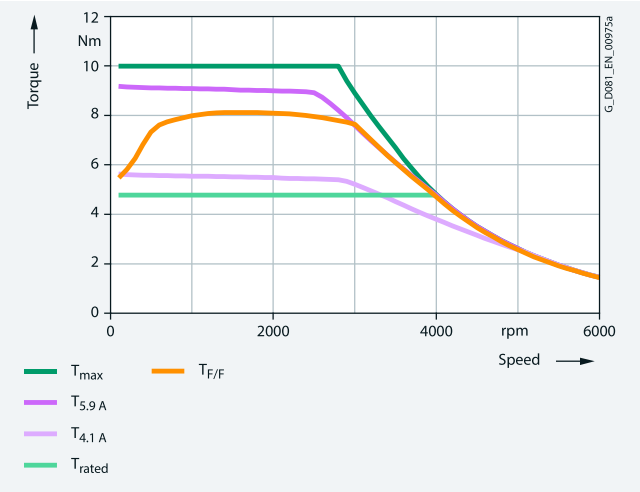

Torque limit for 380 VY (100 Hz characteristic)

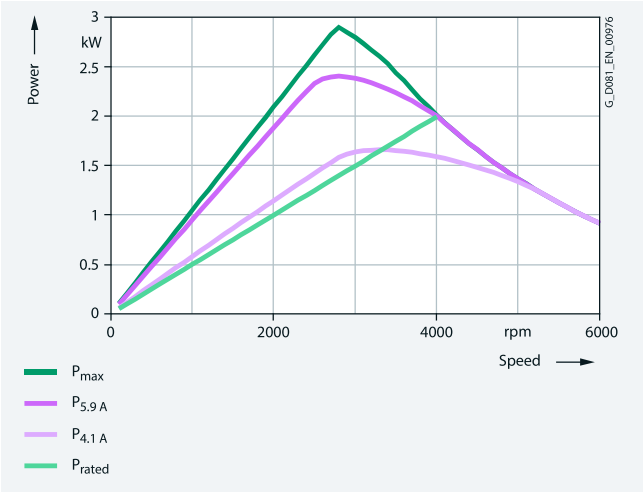

Power limit for 380 VY (100 Hz characteristic)

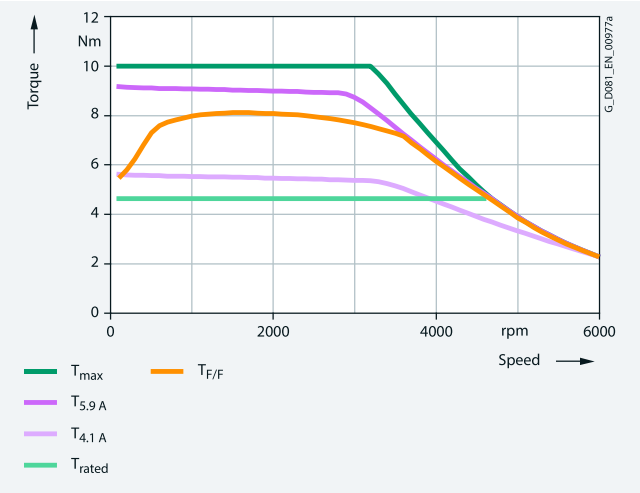

Torque limit for 440 VY (120 Hz characteristic)

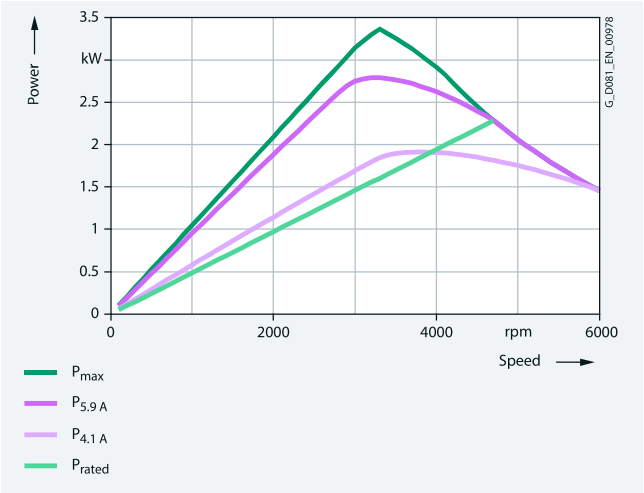

Power limit for 440 VY (120 Hz characteristic)

© Innomotics 2024

Technical specifications

The torque and power characteristics for converter configuration for the Innomotics GP/SD 1FP1.14-0EF4 motor, frame size 90 with the particular motor voltage and circuit:

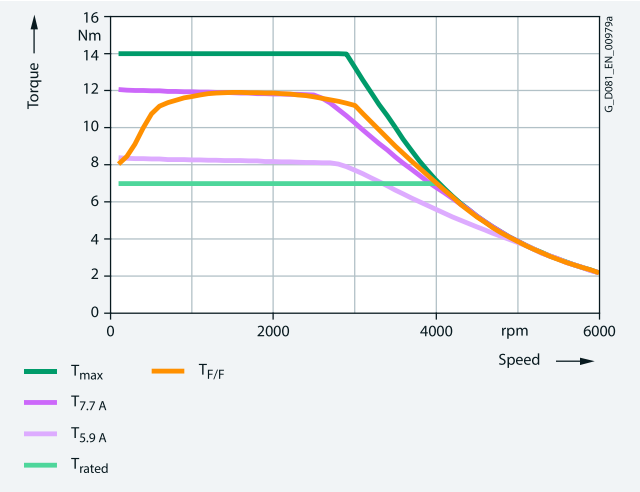

Torque limit for 380 VY (100 Hz characteristic)

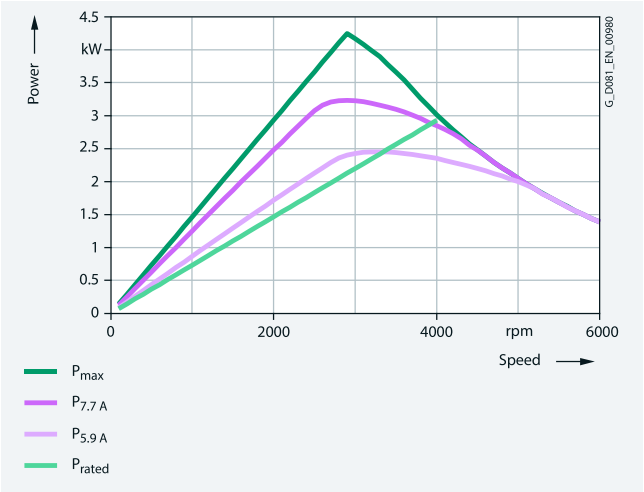

Power limit for 380 VY (100 Hz characteristic)

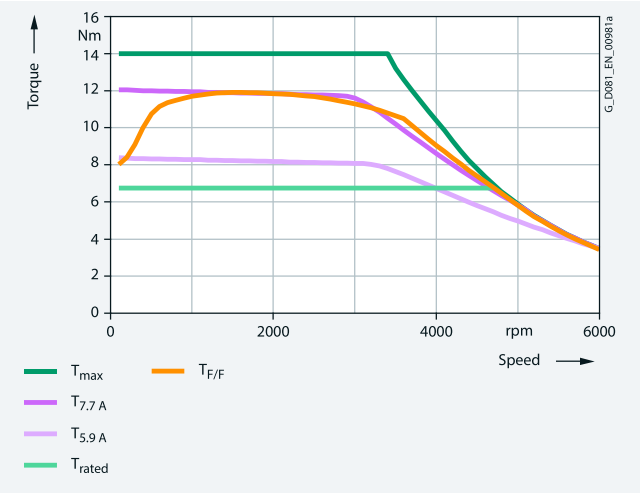

Torque limit for 440 VY (120 Hz characteristic)

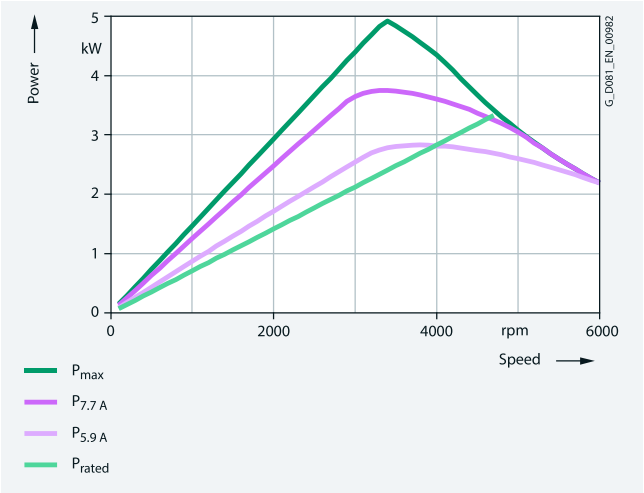

Power limit for 440 VY (120 Hz characteristic)

© Innomotics 2024

Technical specifications

The torque and power characteristics for converter configuration for the Innomotics GP/SD 1FP1.14-1BB0 motor, frame size 112 with the particular motor voltage and circuit:

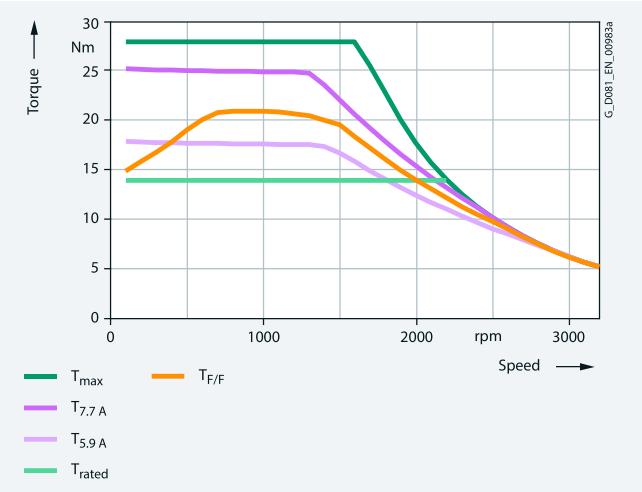

Torque limit for 380 VY (50 Hz characteristic)

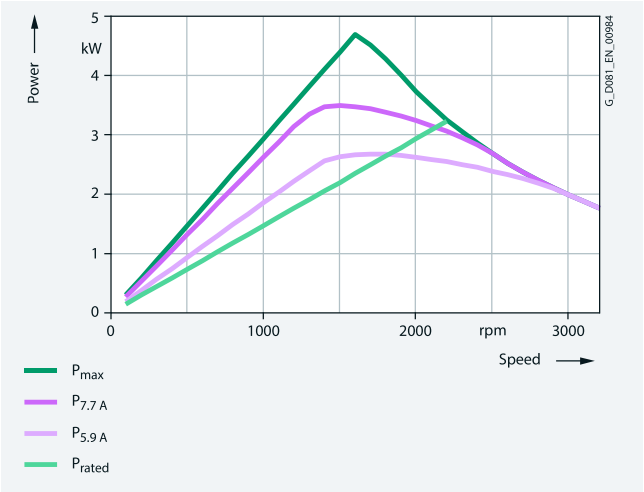

Power limit for 380 VY (50 Hz characteristic)

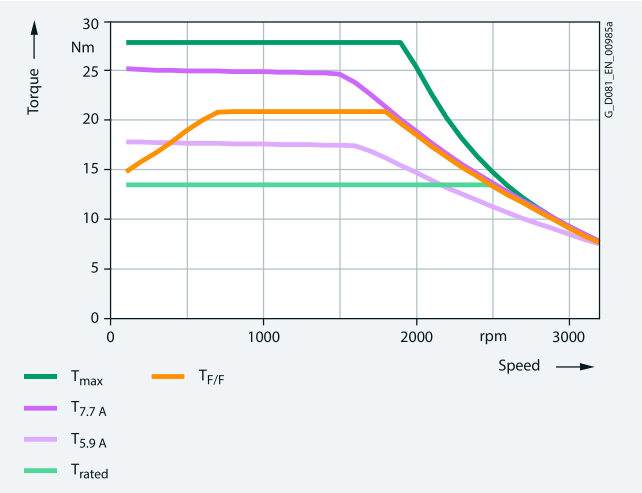

Torque limit for 440 VY (60 Hz characteristic)

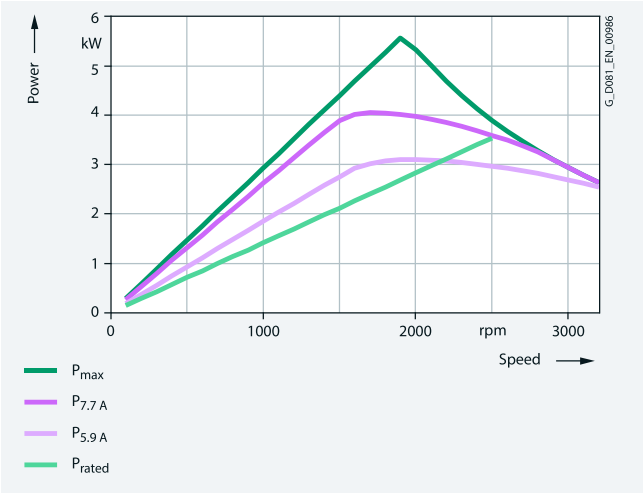

Power limit for 440 VY (60 Hz characteristic)

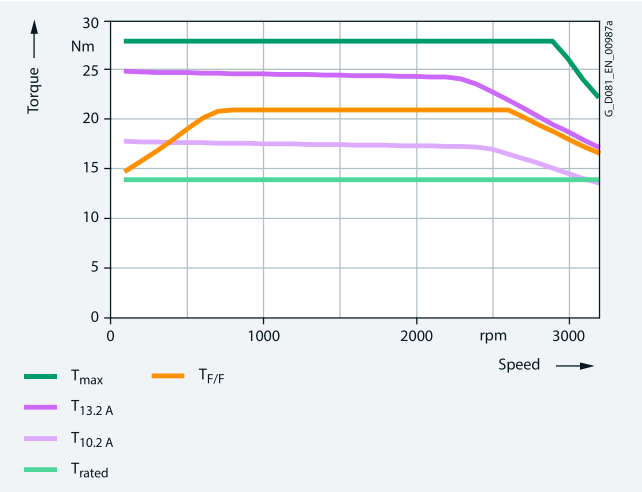

Torque limit for 380 VΔ (87 Hz characteristic)

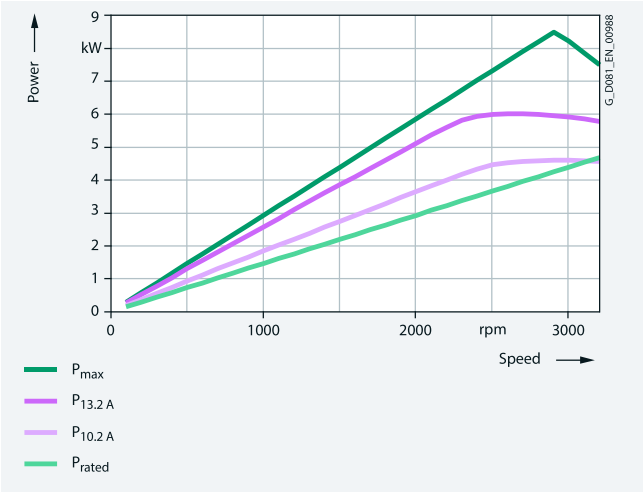

Power limit for 380 VΔ (87 Hz characteristic)

© Innomotics 2024

Technical specifications

The torque and power characteristics for converter configuration for the Innomotics GP/SD 1FP1.14-1BB1 motor, frame size 112 with the particular motor voltage and circuit:

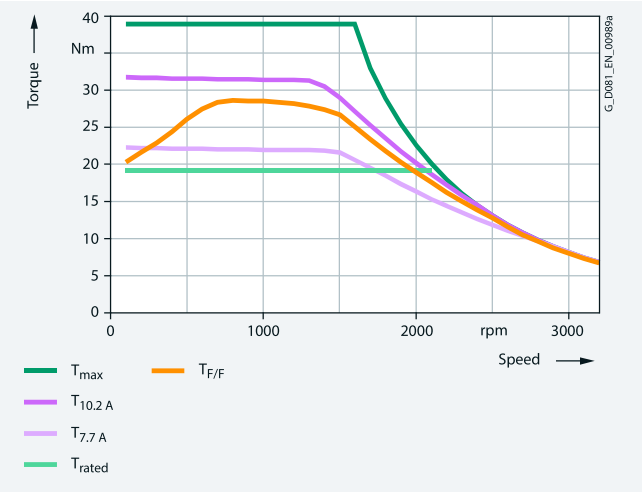

Torque limit for 380 VY (50 Hz characteristic)

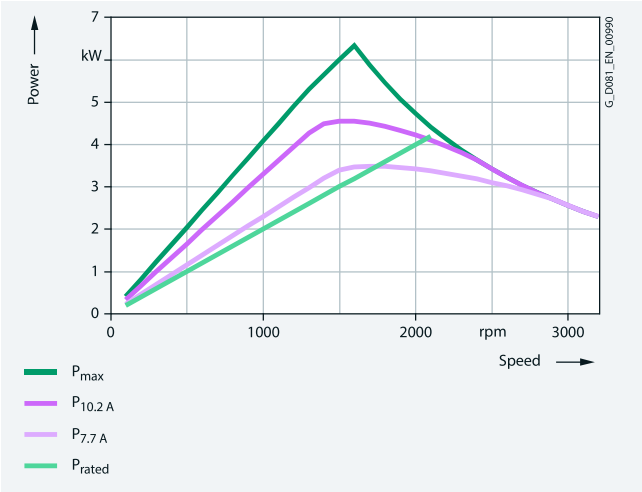

Power limit for 380 VY (50 Hz characteristic)

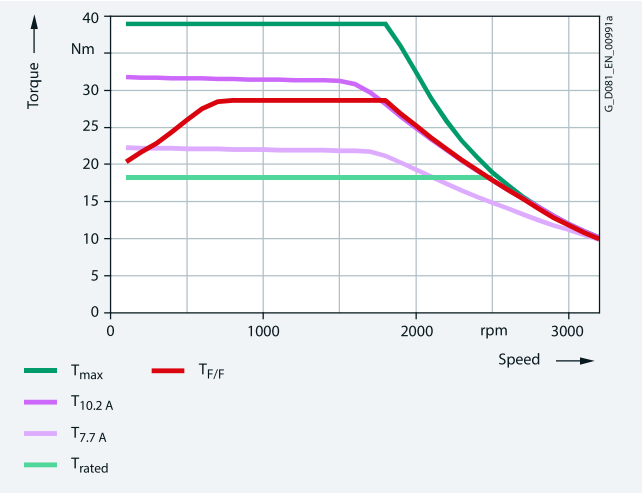

Torque limit for 440 VY (60 Hz characteristic)

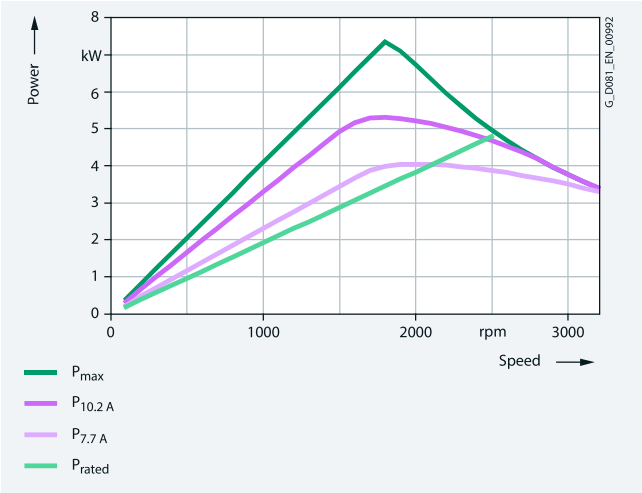

Power limit for 440 VY (60 Hz characteristic)

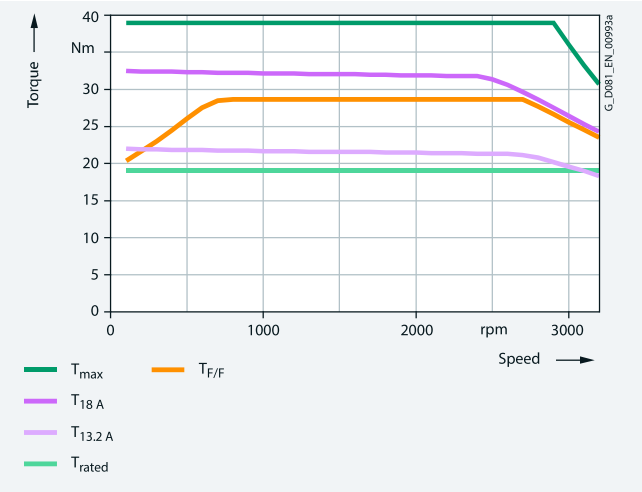

Torque limit for 380 VΔ (87 Hz characteristic)

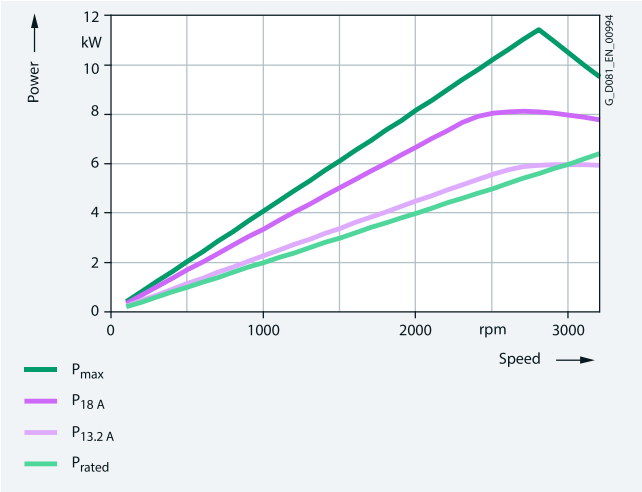

Power limit for 380 VΔ (87 Hz characteristic)

© Innomotics 2024

Technical specifications

The torque and power characteristics for converter configuration for the Innomotics GP/SD 1FP1.14-1BB2 motor, frame size 112 with the particular motor voltage and circuit:

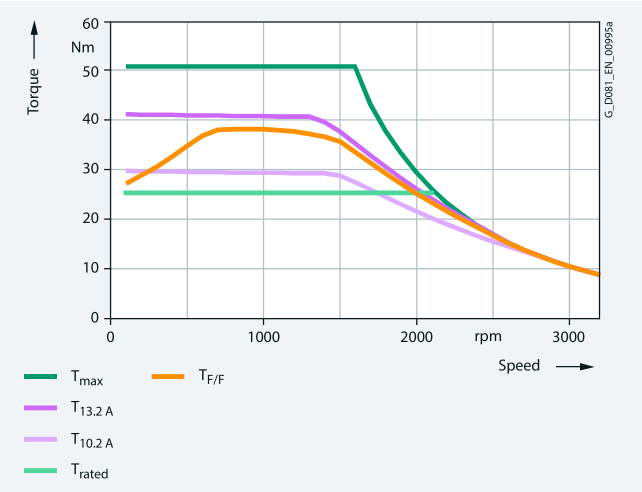

Torque limit for 380 VY (50 Hz characteristic)

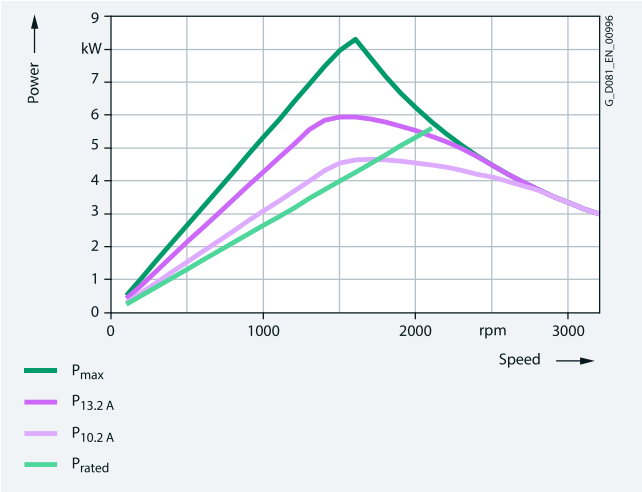

Power limit for 380 VY (50 Hz characteristic)

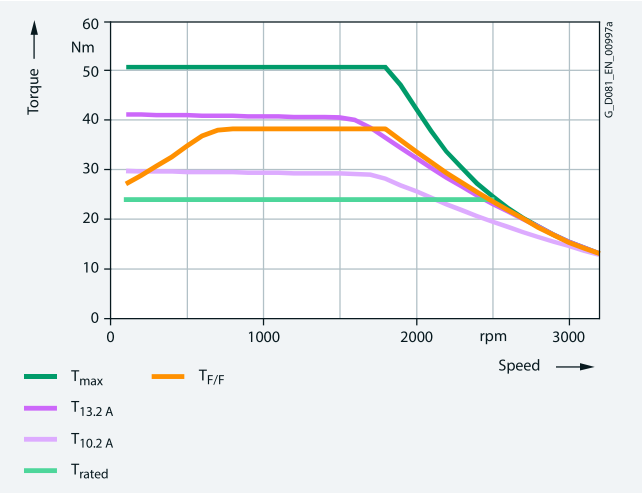

Torque limit for 440 VY (60 Hz characteristic)

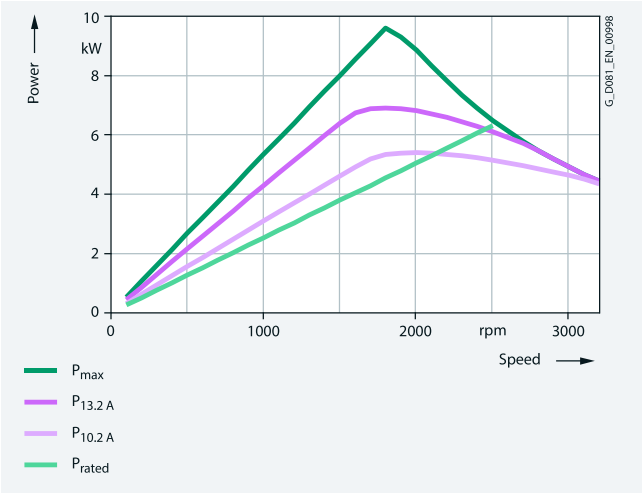

Power limit for 440 VY (60 Hz characteristic)

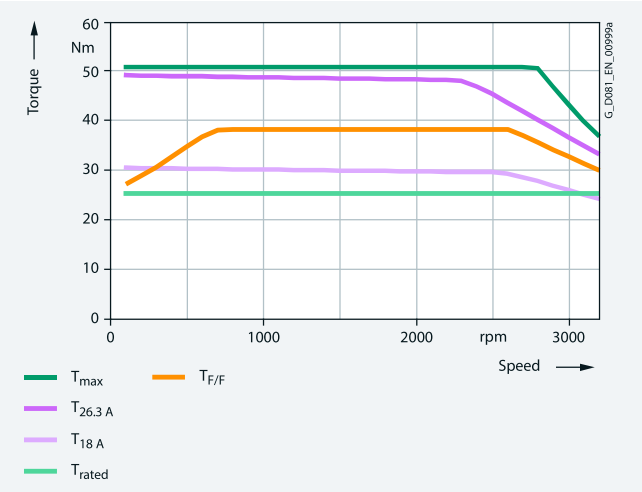

Torque limit for 380 VΔ (87 Hz characteristic)

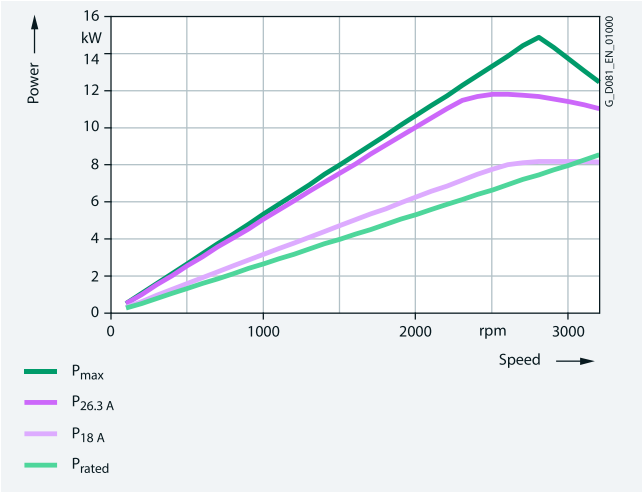

Power limit for 380 VΔ (87 Hz characteristic)

© Innomotics 2024

Technical specifications

The torque and power characteristics for converter configuration for the Innomotics SD 1FP1514-1BF1 motor, frame size 112 with the particular motor voltage and circuit:

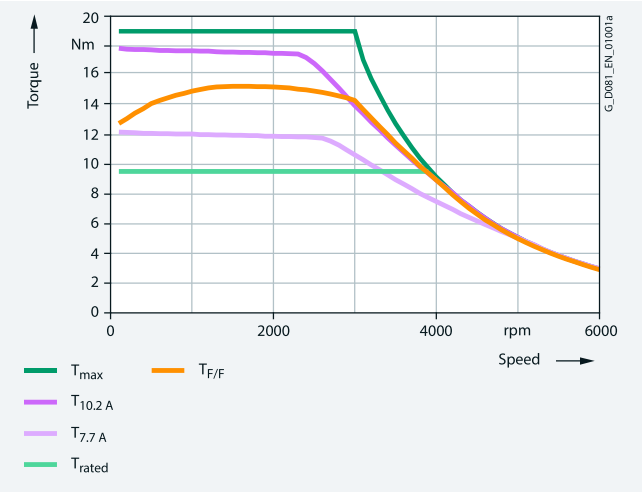

Torque limit for 380 VY (100 Hz characteristic)

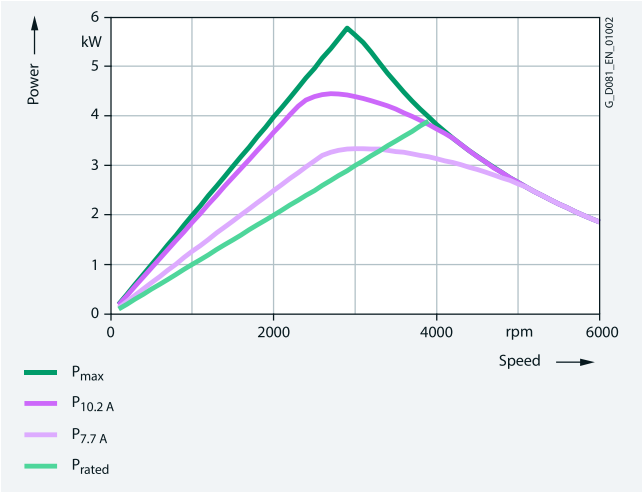

Power limit for 380 VY (100 Hz characteristic)

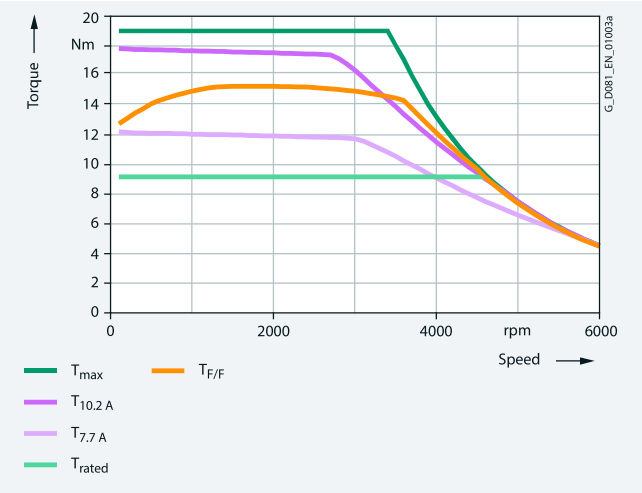

Torque limit for 440 VY (120 Hz characteristic)

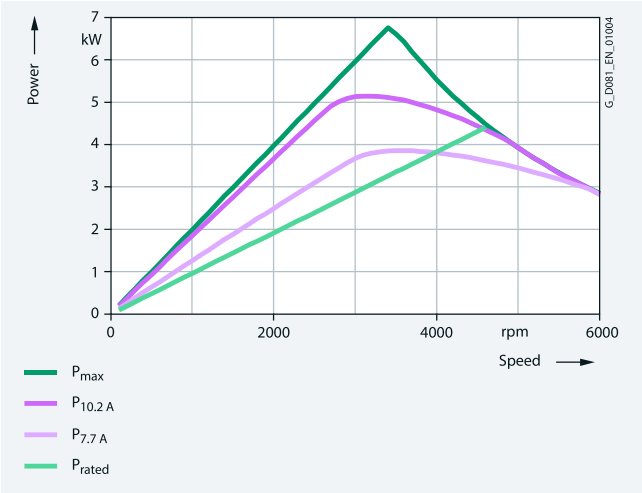

Power limit for 440 VY (120 Hz characteristic)

© Innomotics 2024

Technical specifications

The torque and power characteristics for converter configuration for the Innomotics GP/SD 1FP1.14-1BF2 motor, frame size 112 with the particular motor voltage and circuit:

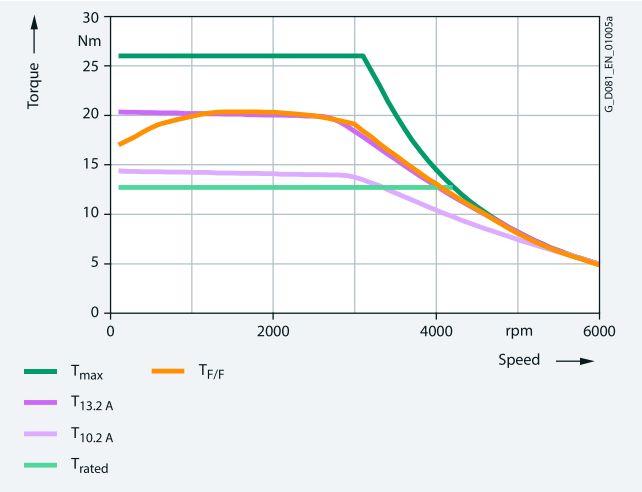

Torque limit for 380 VY (100 Hz characteristic)

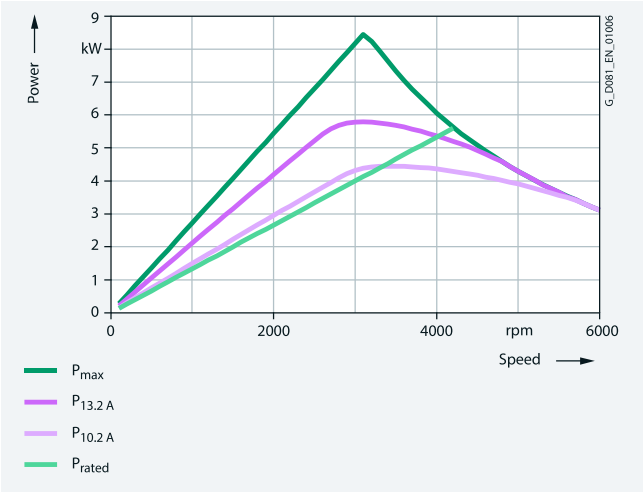

Power limit for 380 VY (100 Hz characteristic)

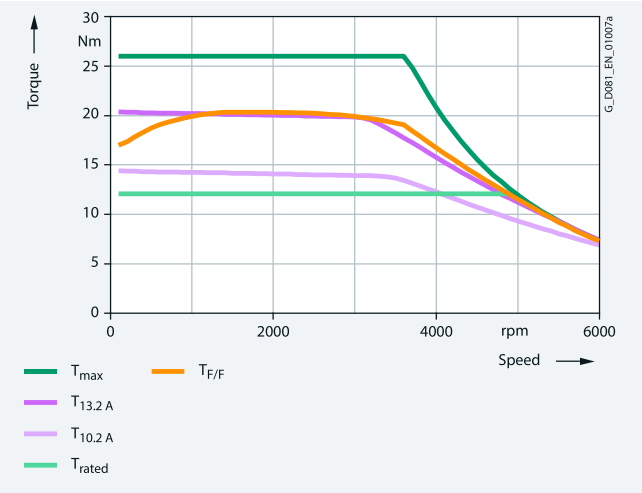

Torque limit for 440 VY (120 Hz characteristic)

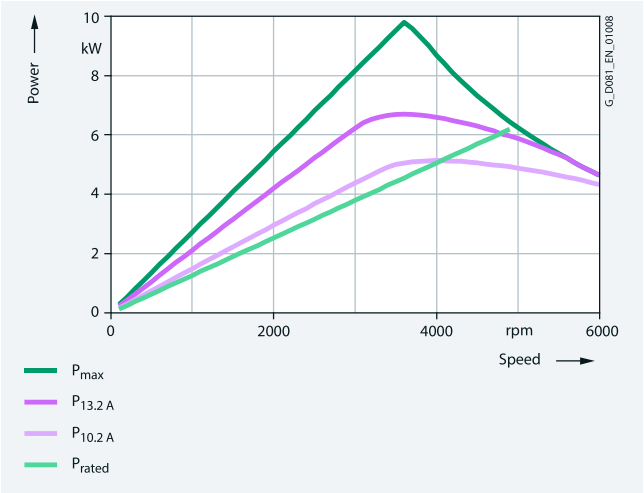

Power limit for 440 VY (120 Hz characteristic)

© Innomotics 2024

Technical specifications

The torque and power characteristics for converter configuration for the Innomotics GP/SD 1FP1.14-1CB0 motor, frame size 132 with the particular motor voltage and circuit:

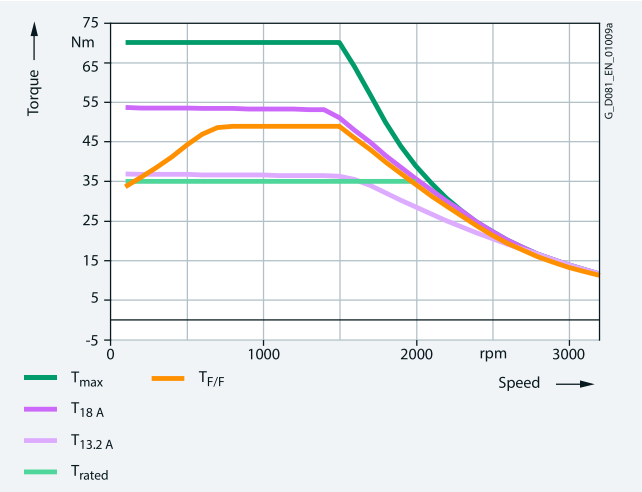

Torque limit for 380 VY (50 Hz characteristic)

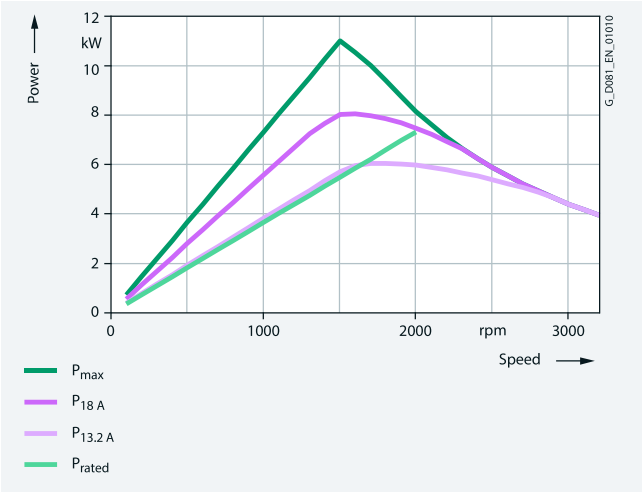

Power limit for 380 VY (50 Hz characteristic)

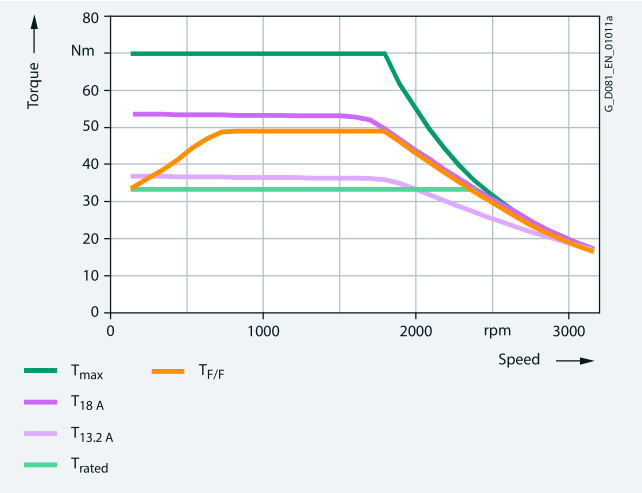

Torque limit for 440 VY (60 Hz characteristic)

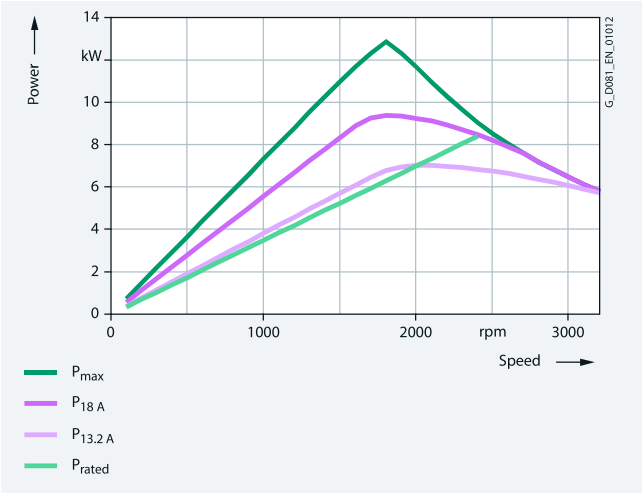

Power limit for 440 VY (60 Hz characteristic)

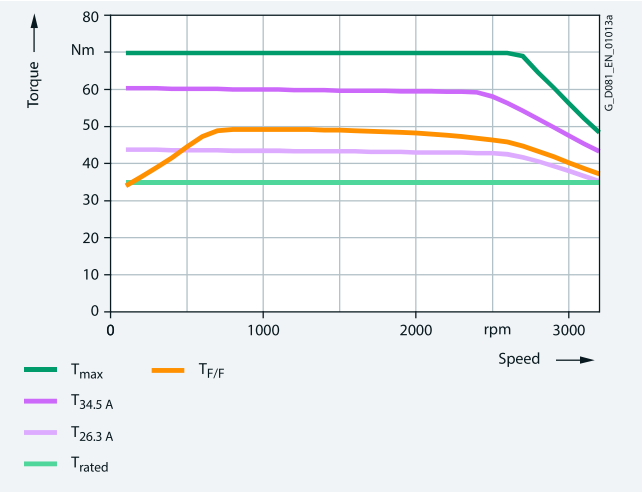

Torque limit for 380 VΔ (87 Hz characteristic)

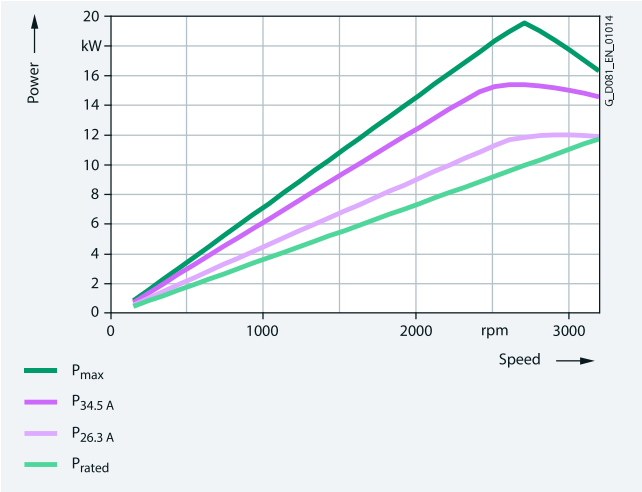

Power limit for 380 VΔ (87 Hz characteristic)

5

© Innomotics 2024

Technical specifications

The torque and power characteristics for converter configuration for the Innomotics GP/SD 1FP1.14-1CB2 motor, frame size 132 with the particular motor voltage and circuit:

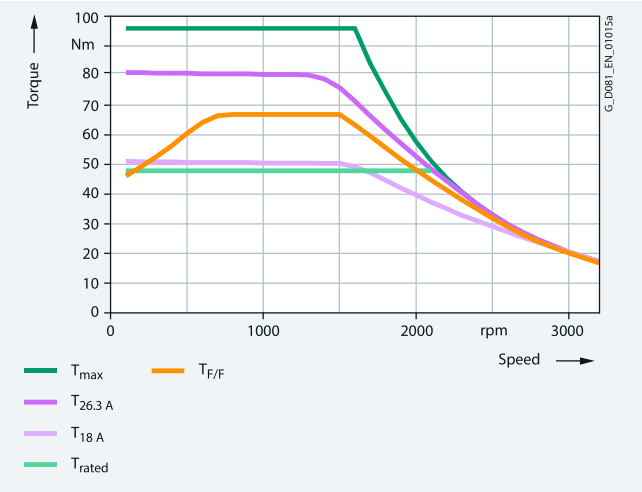

Torque limit for 380 VY (50 Hz characteristic)

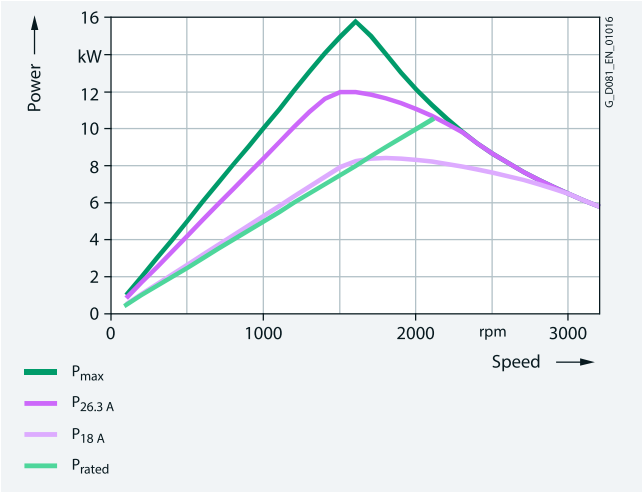

Power limit for 380 VY (50 Hz characteristic)

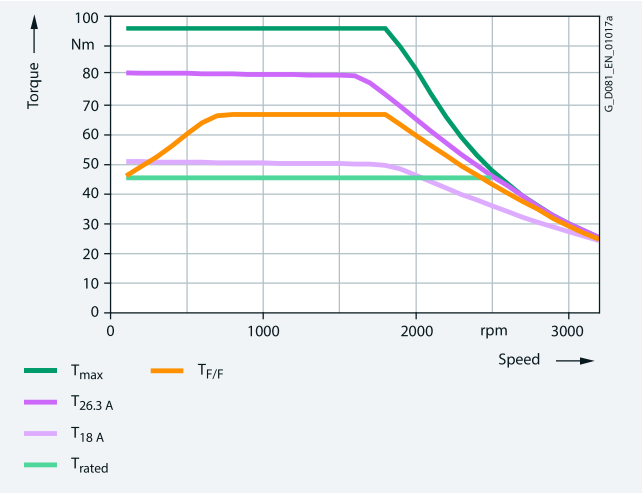

Torque limit for 440 VY (60 Hz characteristic)

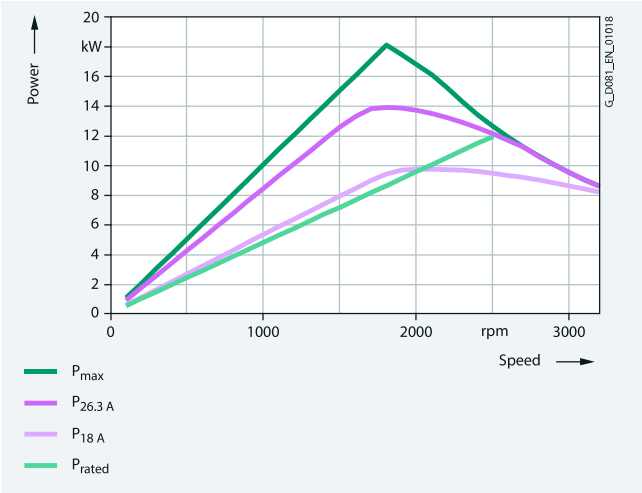

Power limit for 440 VY (60 Hz characteristic)

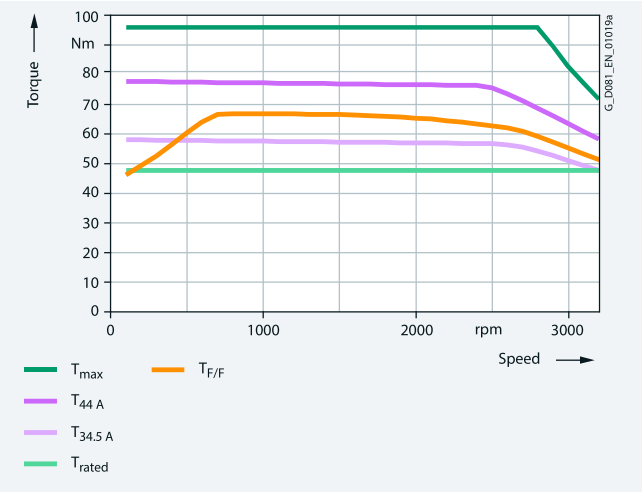

Torque limit for 380 VΔ (87 Hz characteristic)

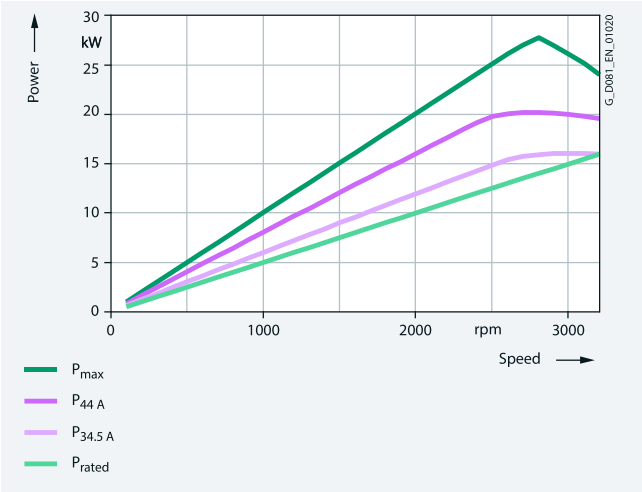

Power limit for 380 VΔ (87 Hz characteristic)

© Innomotics 2024

Technical specifications

The torque and power characteristics for converter configuration for the Innomotics GP/SD 1FP1.14-1CF0 motor, frame size 132 with the particular motor voltage and circuit:

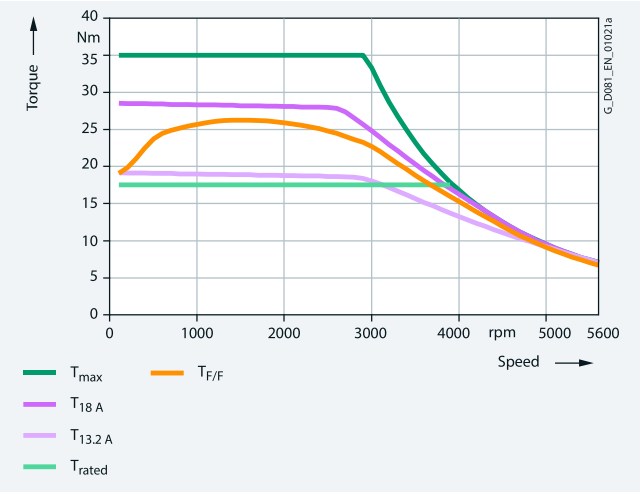

Torque limit for 380 VY (100 Hz characteristic)

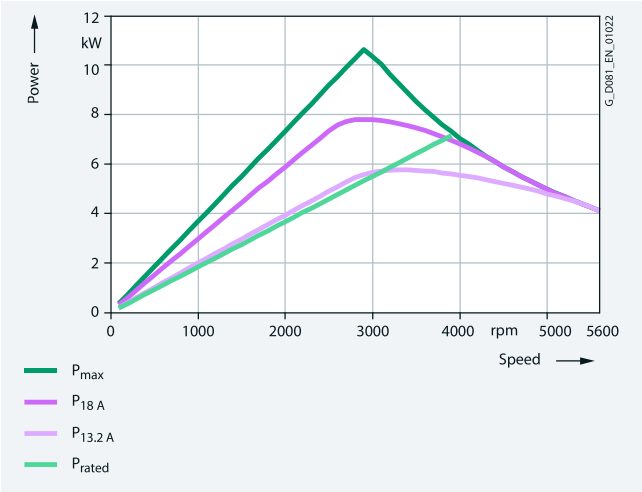

Power limit for 380 VY (100 Hz characteristic)

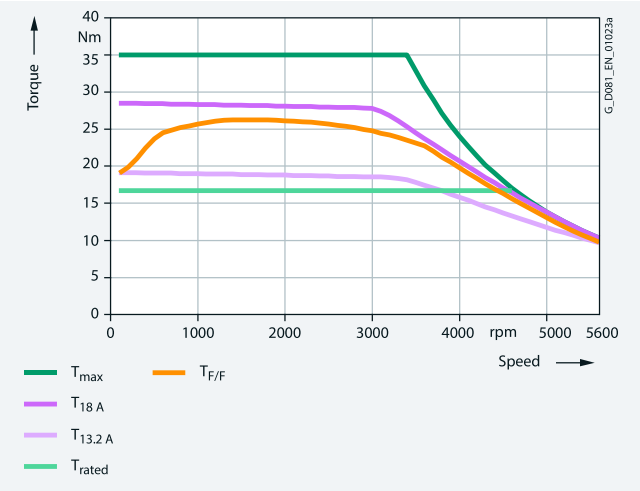

Torque limit for 440 VY (120 Hz characteristic)

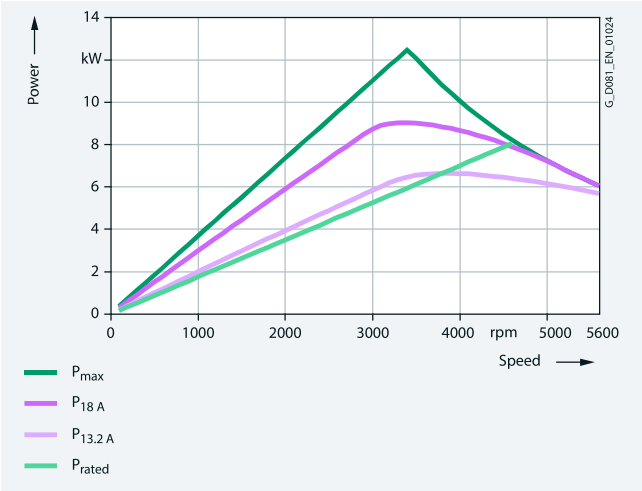

Power limit for 440 VY (120 Hz characteristic)

5

© Innomotics 2024

Technical specifications

The torque and power characteristics for converter configuration for the Innomotics GP/SD 1FP1.14-1CF1 motor, frame size 132 with the particular motor voltage and circuit:

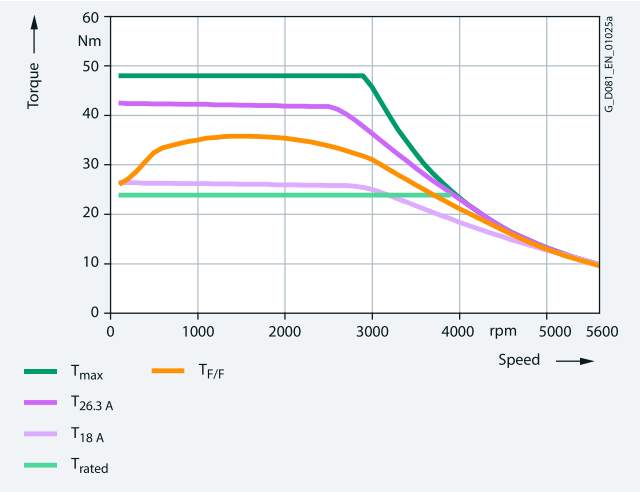

Torque limit for 380 VY (100 Hz characteristic)

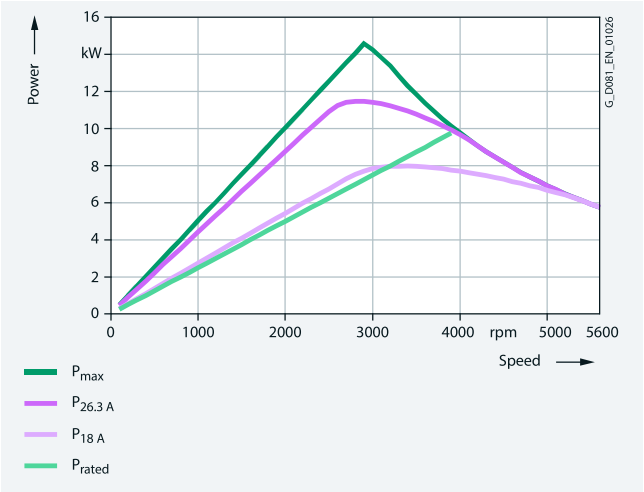

Power limit for 380 VY (100 Hz characteristic)

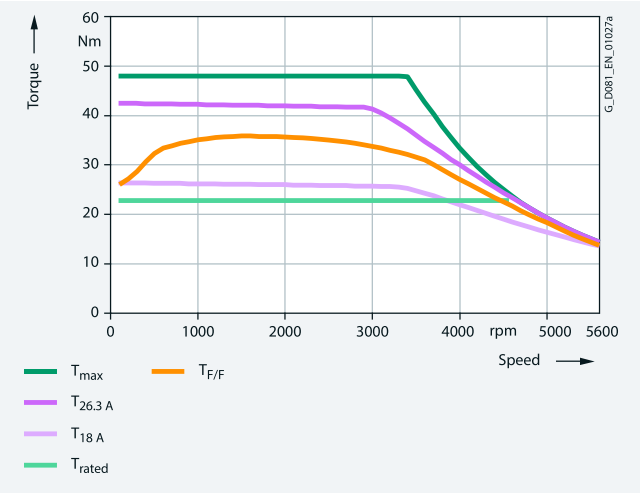

Torque limit for 440 VY (120 Hz characteristic)

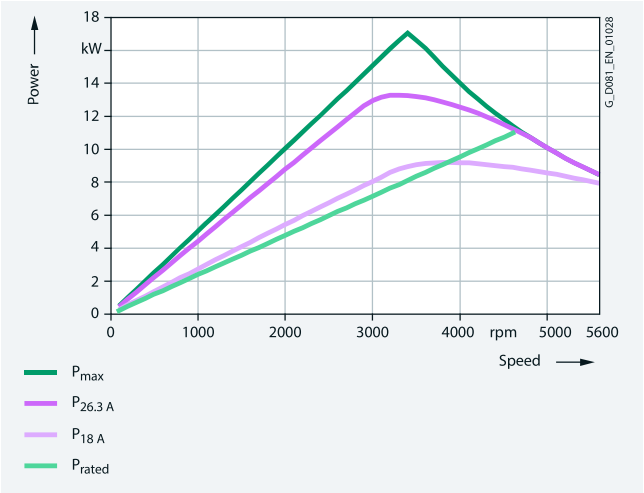

Power limit for 440 VY (120 Hz characteristic)

© Innomotics 2024

Technical specifications

The torque and power characteristics for converter configuration for the Innomotics GP/SD 1FP1.14-1DB2 motor, frame size 160 with the particular motor voltage and circuit:

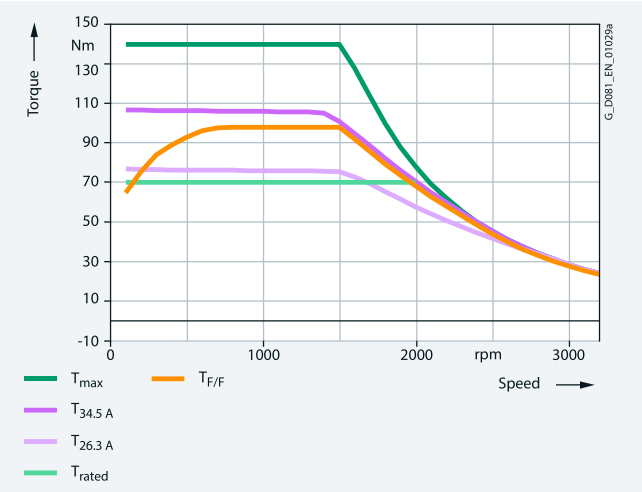

Torque limit for 380 VY (50 Hz characteristic)

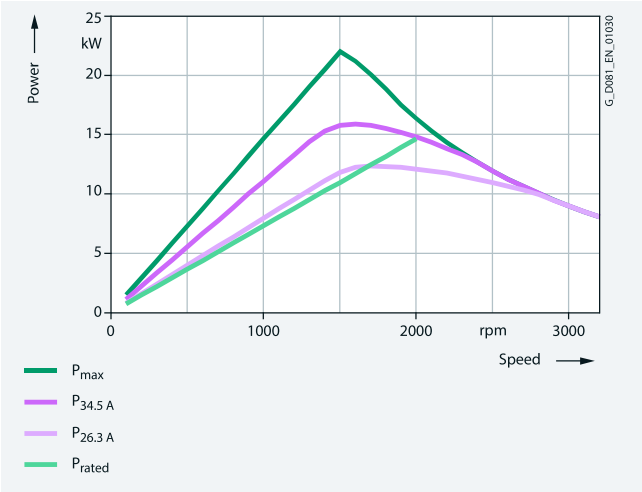

Power limit for 380 VY (50 Hz characteristic)

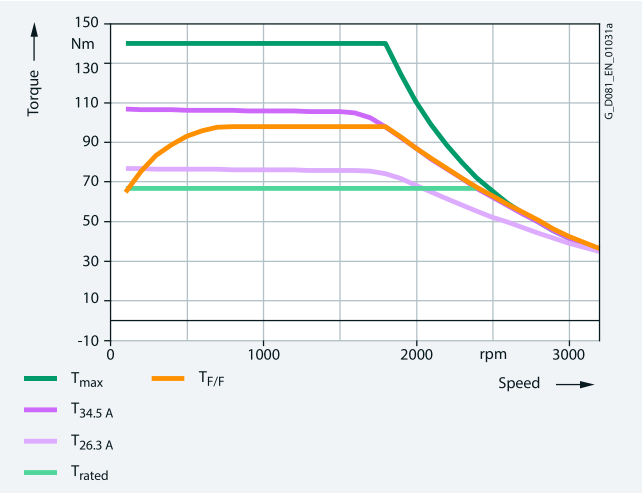

Torque limit for 440 VY (60 Hz characteristic)

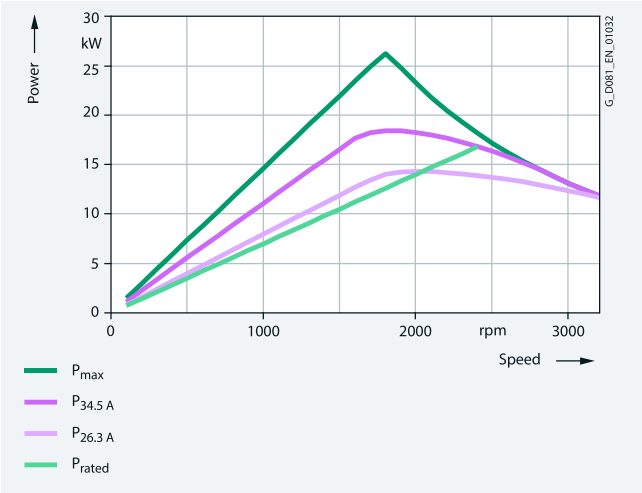

Power limit for 440 VY (60 Hz characteristic)

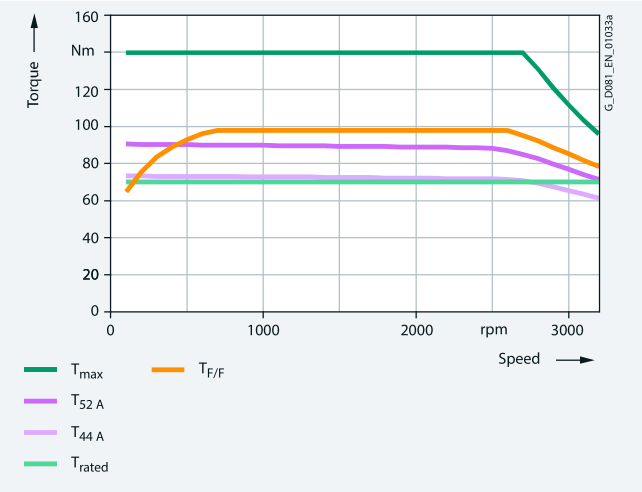

Torque limit for 380 VΔ (87 Hz characteristic)

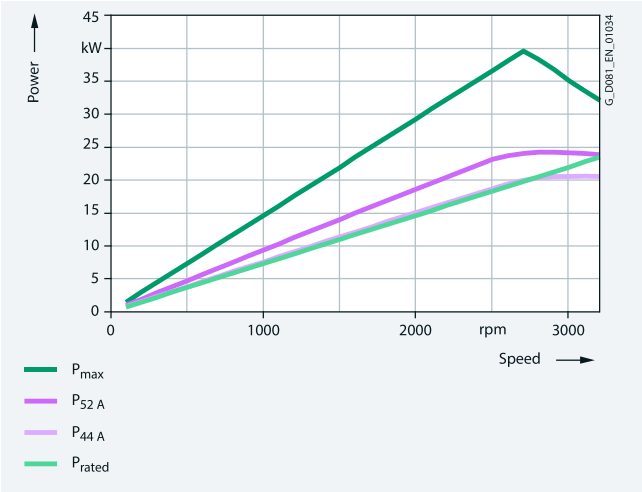

Power limit for 380 VΔ (87 Hz characteristic)

5

© Innomotics 2024

Technical specifications

The torque and power characteristics for converter configuration for the Innomotics GP/SD 1FP1.14-1DB4 motor, frame size 160 with the particular motor voltage and circuit:

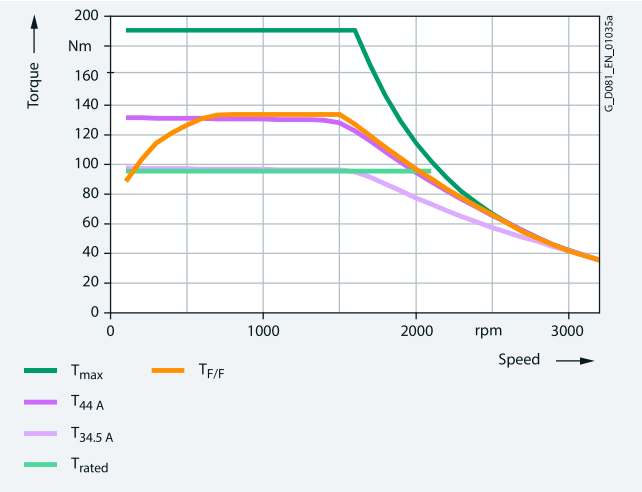

Torque limit for 380 VY (50 Hz characteristic)

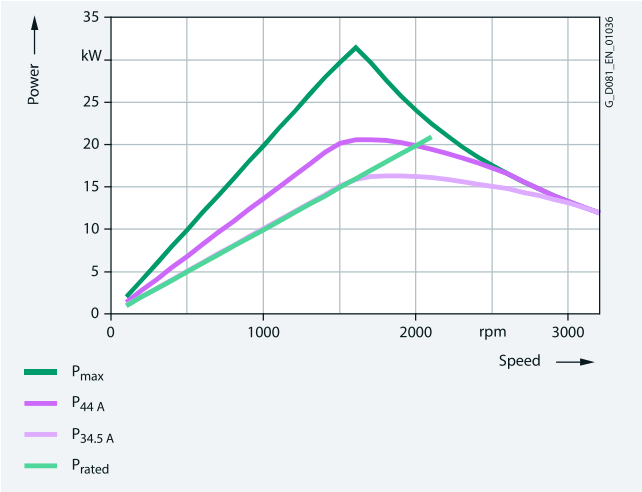

Power limit for 380 VY (50 Hz characteristic)

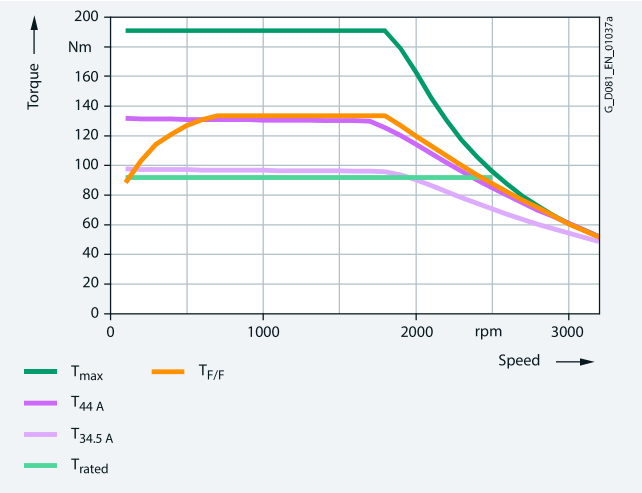

Torque limit for 440 VY (60 Hz characteristic)

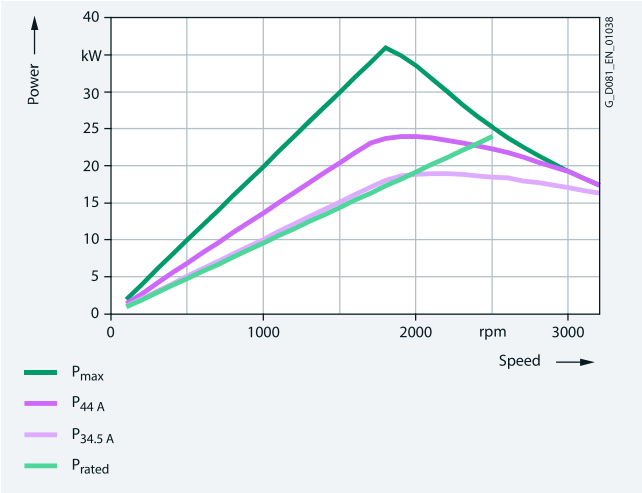

Power limit for 440 VY (60 Hz characteristic)

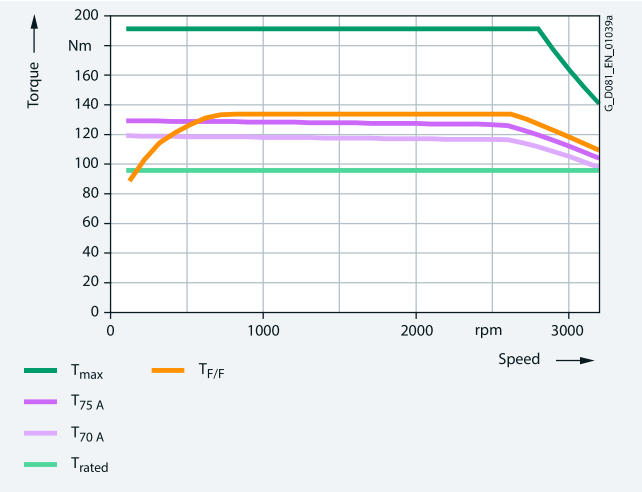

Torque limit for 380 VΔ (87 Hz characteristic)

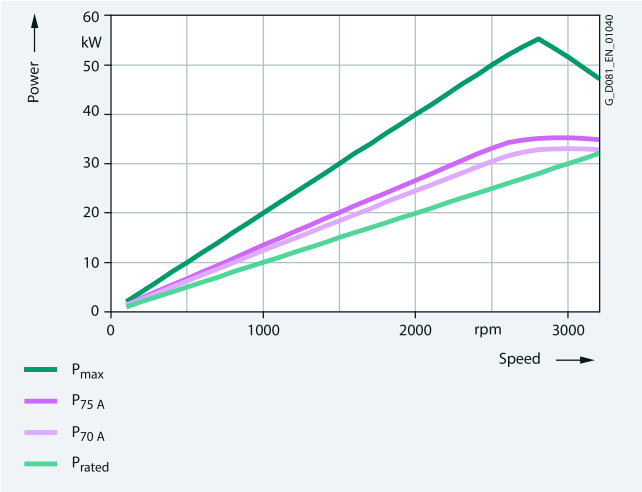

Power limit for 380 VΔ (87 Hz characteristic)

© Innomotics 2024

Technical specifications

The torque and power characteristics for converter configuration for the Innomotics GP/SD 1FP1.14-1DF2 motor, frame size 160 with the particular motor voltage and circuit:

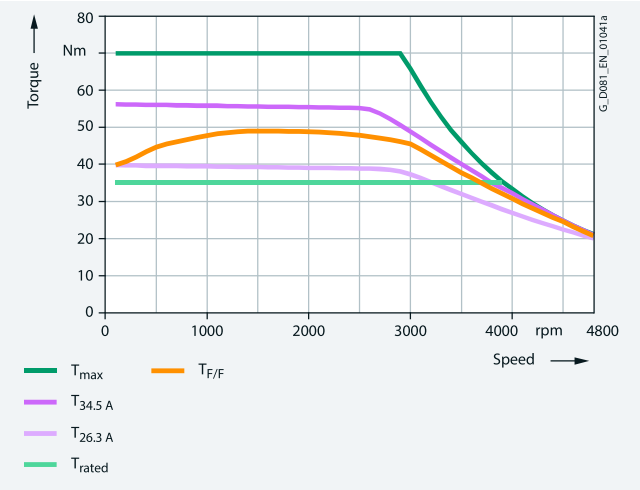

Torque limit for 380 VY (100 Hz characteristic)

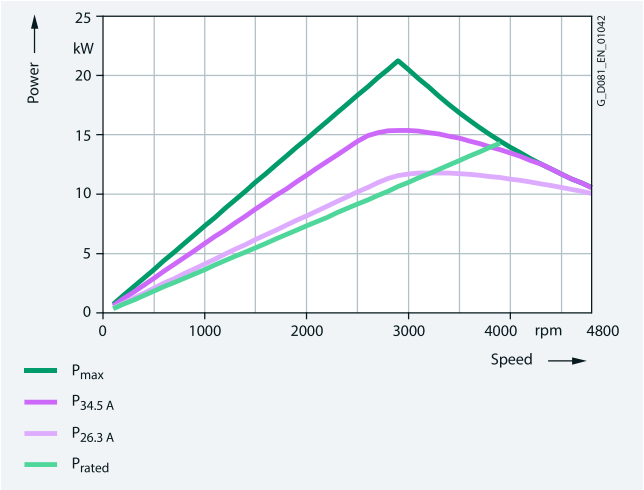

Power limit for 380 VY (100 Hz characteristic)

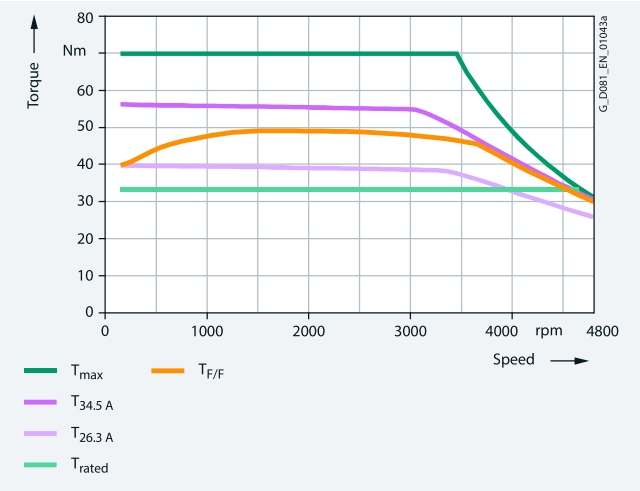

Torque limit for 440 VY (120 Hz characteristic)

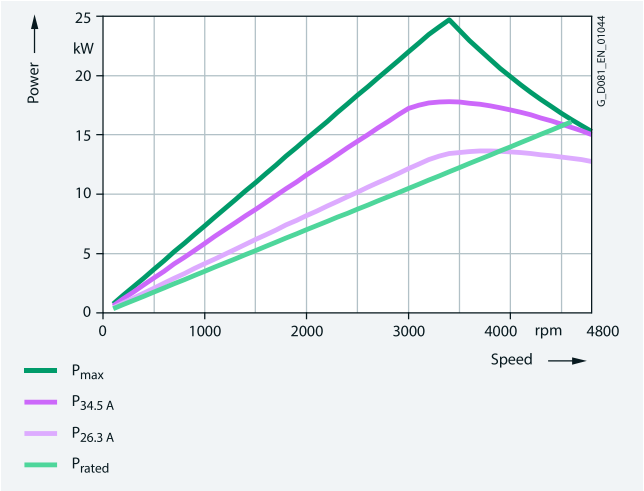

Power limit for 440 VY (120 Hz characteristic)

© Innomotics 2024

Technical specifications

The torque and power characteristics for converter configuration for the Innomotics GP/SD 1FP1.14-1DF3 motor, frame size 160 with the particular motor voltage and circuit:

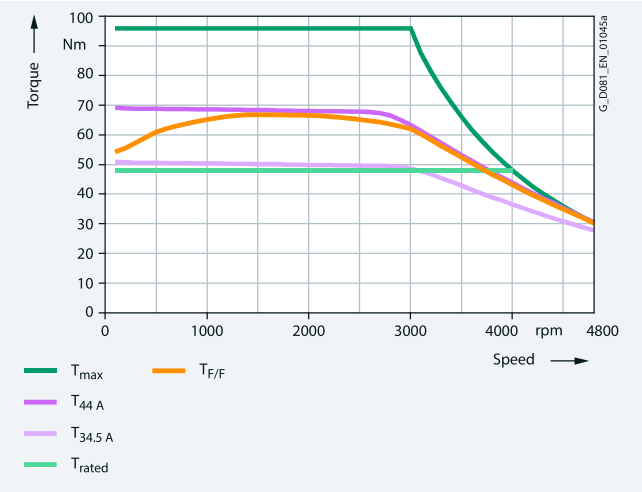

Torque limit for 380 VY (100 Hz characteristic)

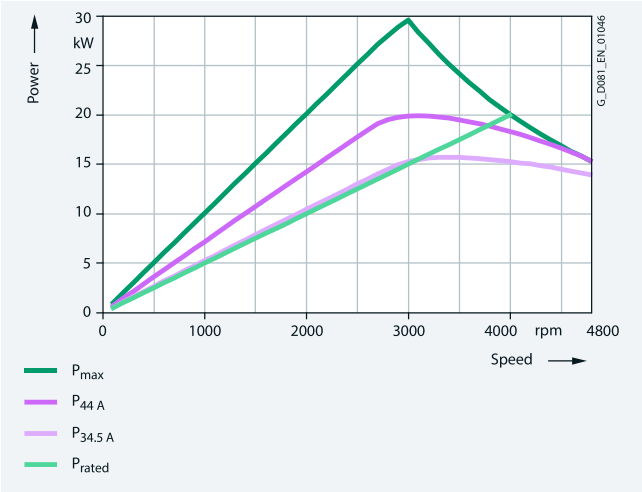

Power limit for 380 VY (100 Hz characteristic)

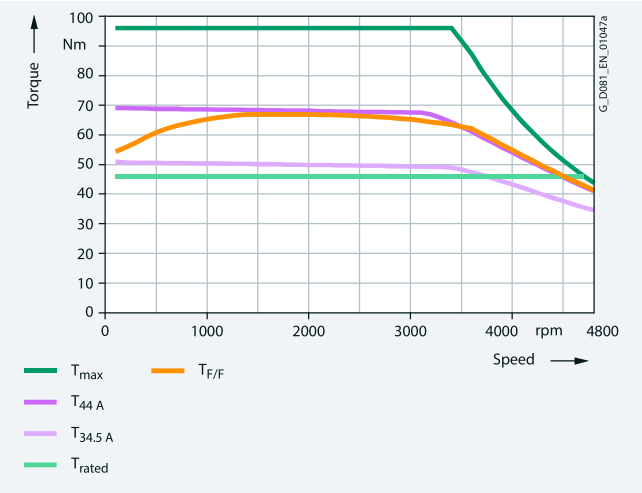

Torque limit for 440 VY (120 Hz characteristic)

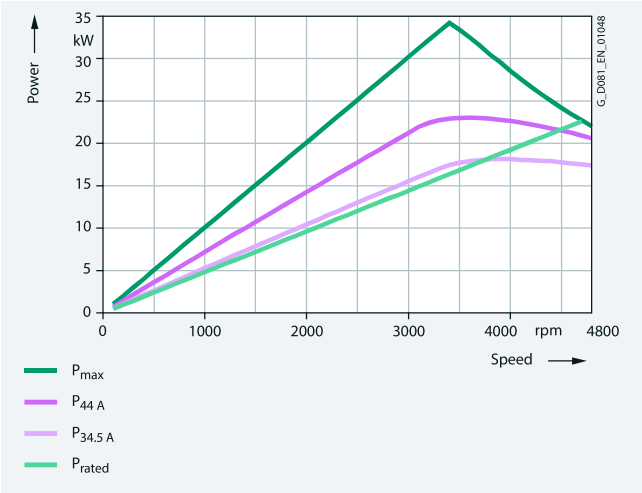

Power limit for 440 VY (120 Hz characteristic)

© Innomotics 2024

Technical specifications

The torque and power characteristics for converter configuration for the Innomotics GP/SD 1FP1.14-1DF4 motor, frame size 160 with the particular motor voltage and circuit:

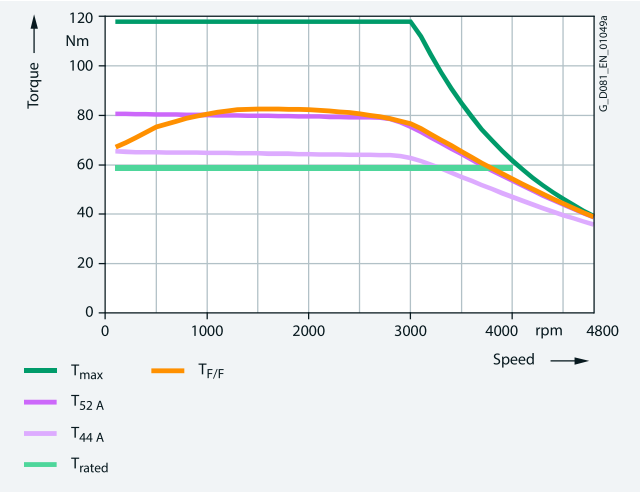

Torque limit for 380 VY (100 Hz characteristic)

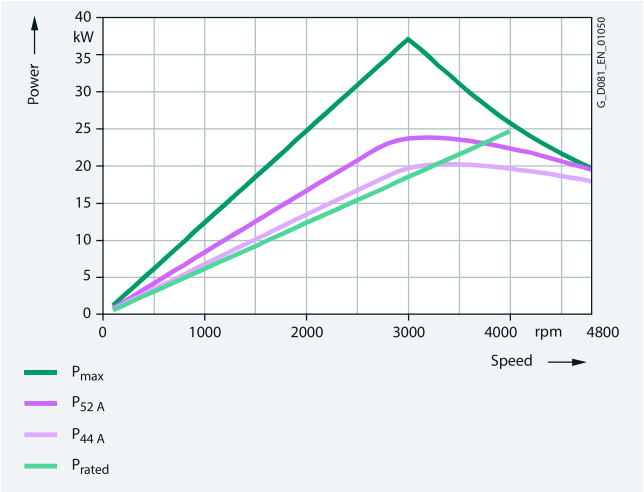

Power limit for 380 VY (100 Hz characteristic)

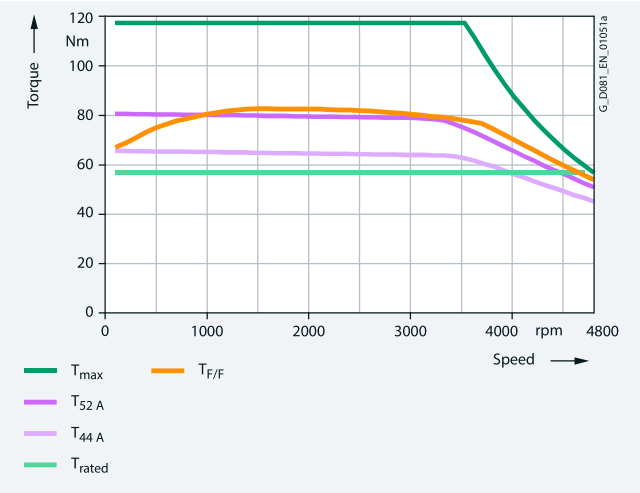

Torque limit for 440 VY (120 Hz characteristic)

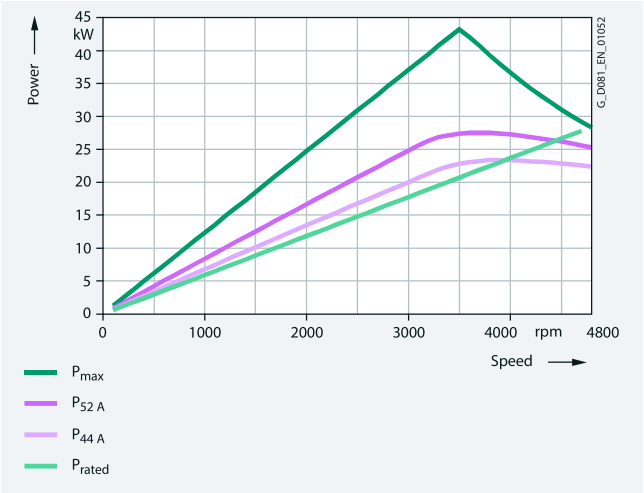

Power limit for 440 VY (120 Hz characteristic)

© Innomotics 2024

Technical specifications

The torque and power characteristics for converter configuration for the Innomotics SD 1FP1514-1EB2 motor, frame size 180 with the particular motor voltage and circuit:

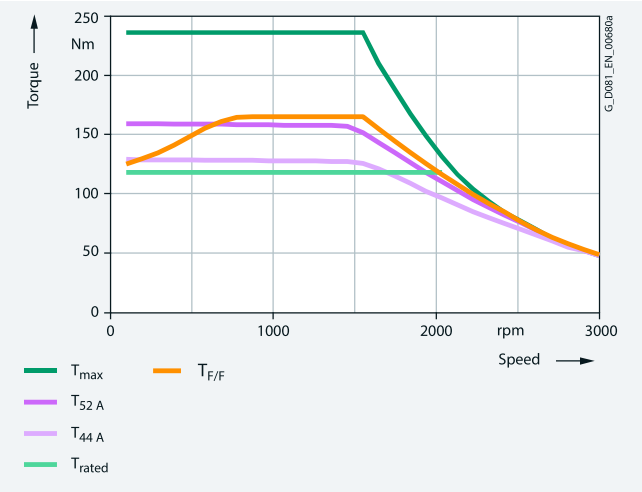

Torque limit for 380 VY (50 Hz characteristic)

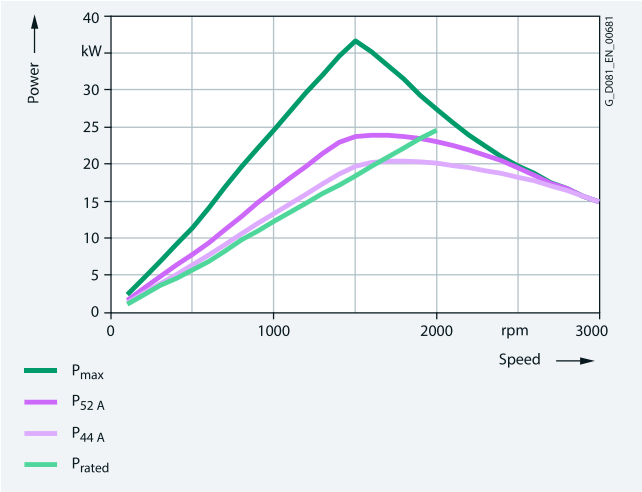

Power limit for 380 VY (50 Hz characteristic)

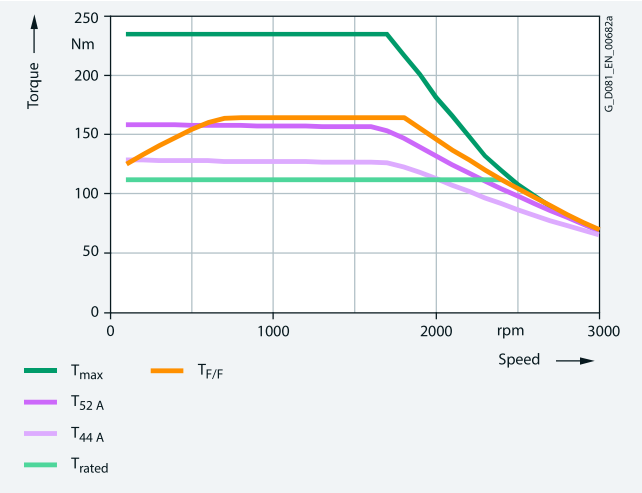

Torque limit for 440 VY (60 Hz characteristic)

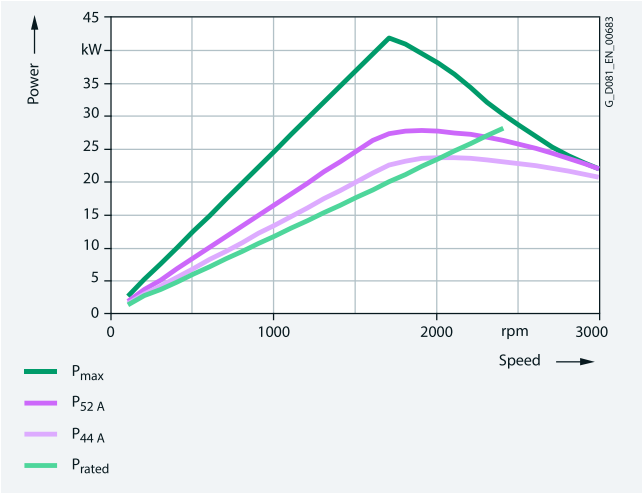

Power limit for 440 VY (60 Hz characteristic)

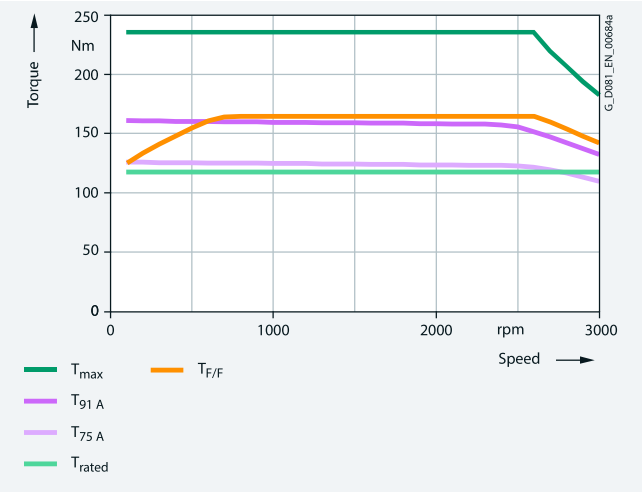

Torque limit for 380 VΔ (87 Hz characteristic)

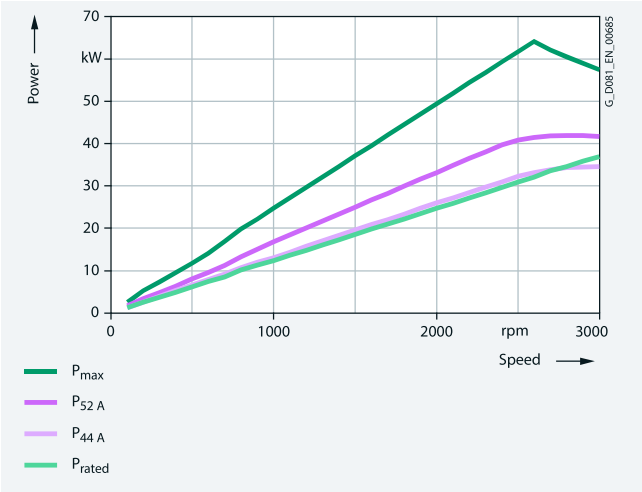

Power limit for 380 VΔ (87 Hz characteristic)

© Innomotics 2024

Technical specifications

The torque and power characteristics for converter configuration for the Innomotics SD 1FP1514-1EB4 motor, frame size 180 with the particular motor voltage and circuit:

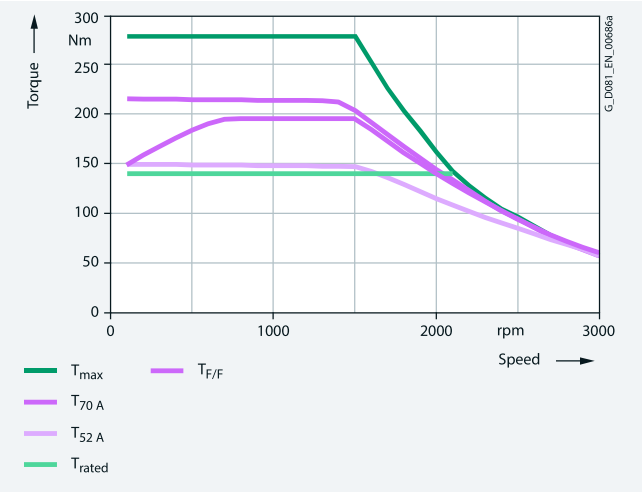

Torque limit for 380 VY (50 Hz characteristic)

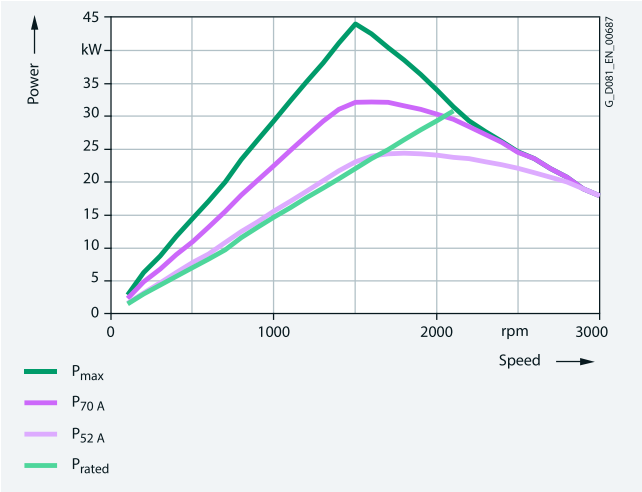

Power limit for 380 VY (50 Hz characteristic)

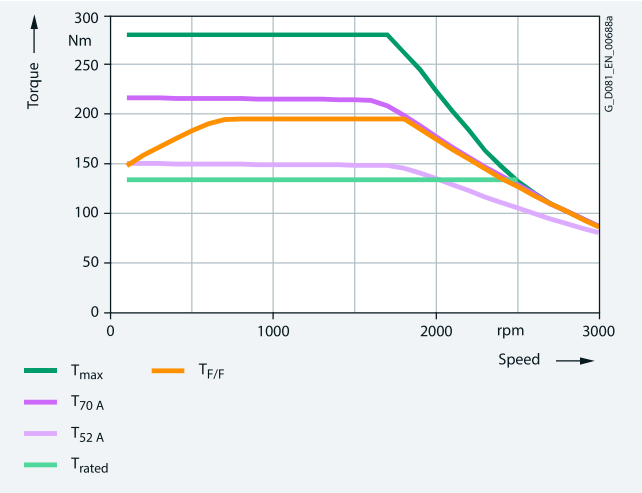

Torque limit for 440 VY (60 Hz characteristic)

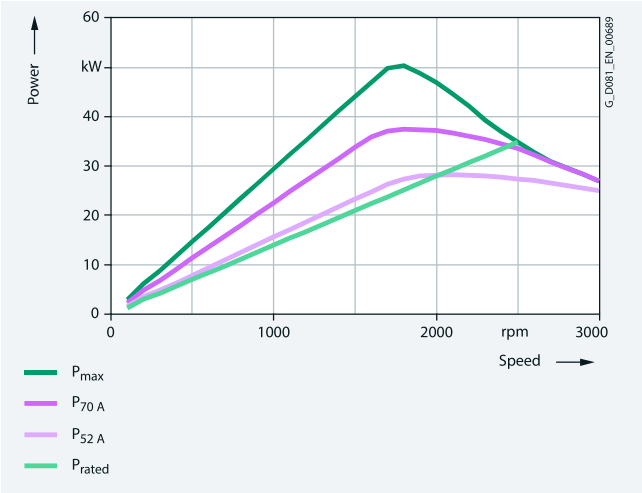

Power limit for 440 VY (60 Hz characteristic)

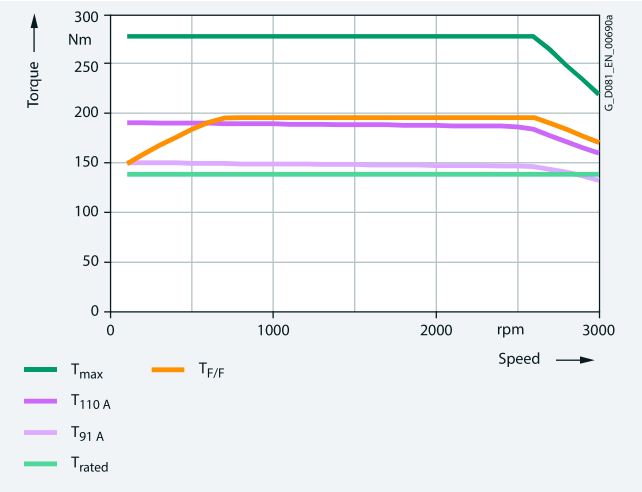

Torque limit for 380 VΔ (87 Hz characteristic)

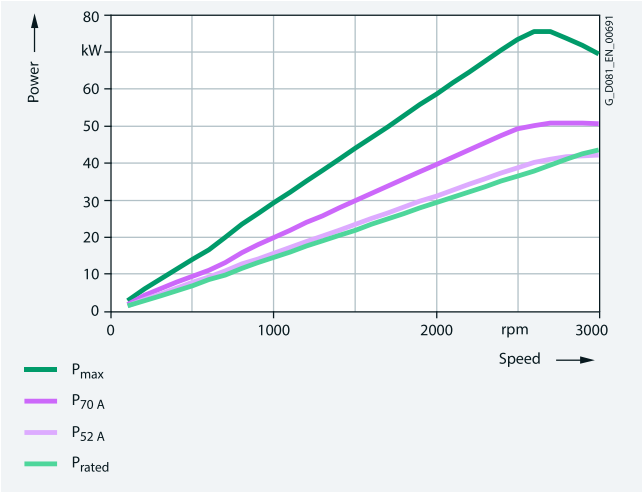

Power limit for 380 VΔ (87 Hz characteristic)

5

© Innomotics 2024

Technical specifications

The torque and power characteristics for converter configuration for the Innomotics SD 1FP1514-1EF2 motor, frame size 180 with the particular motor voltage and circuit:

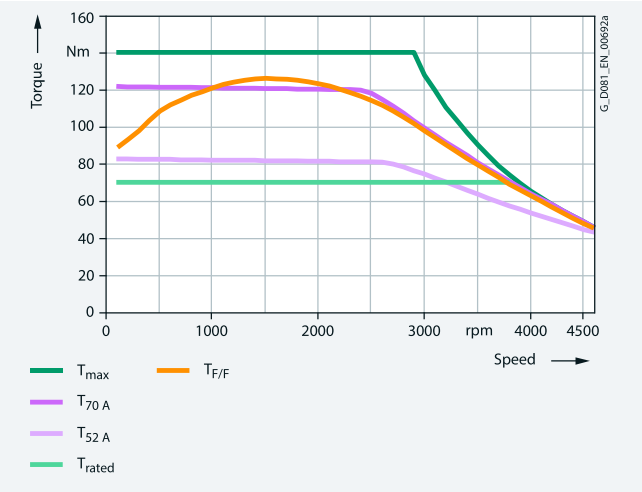

Torque limit for 380 VY (50 Hz characteristic)

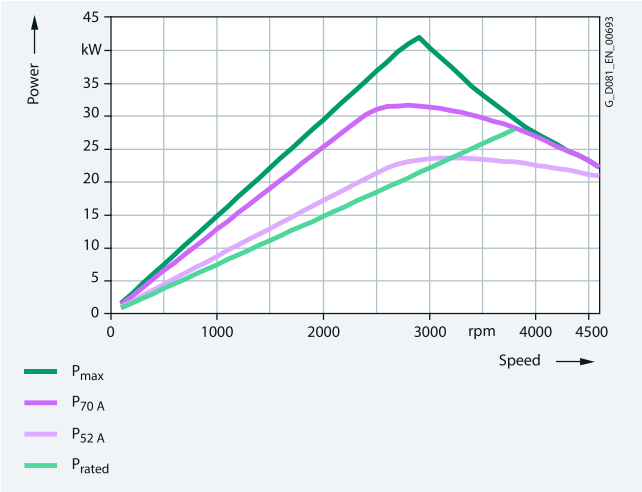

Power limit for 380 VY (50 Hz characteristic)

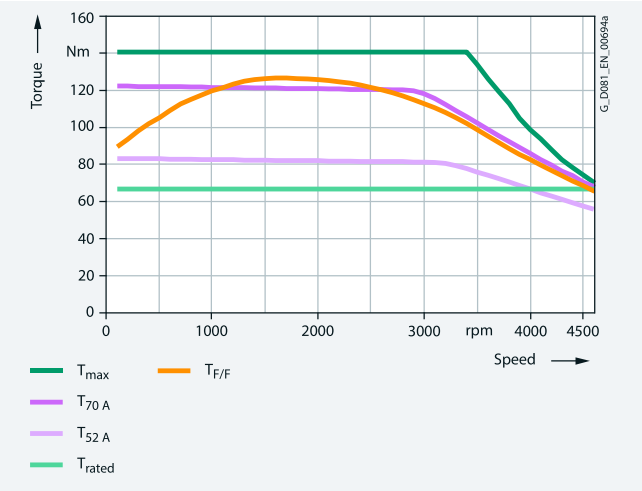

Torque limit for 440 VY (60 Hz characteristic)

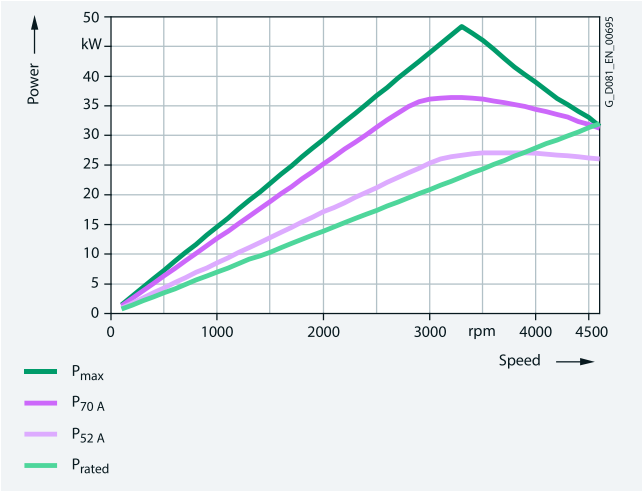

Power limit for 440 VY (60 Hz characteristic)

© Innomotics 2024

Technical specifications

The torque and power characteristics for converter configuration for the Innomotics SD 1FP1514-2AB5 motor, frame size 200 with the particular motor voltage and circuit:

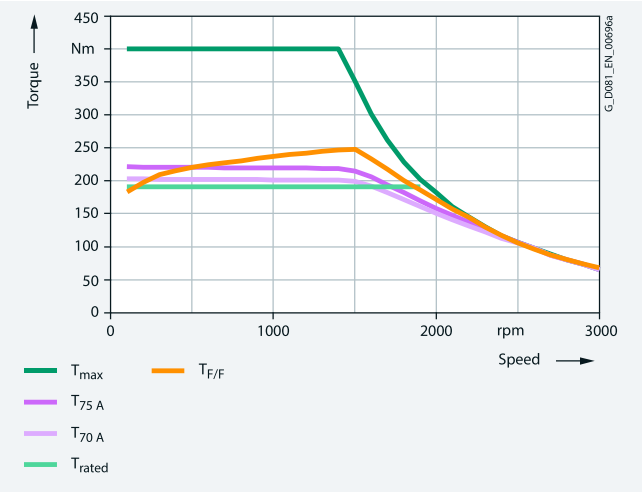

Torque limit for 380 VY (50 Hz characteristic)

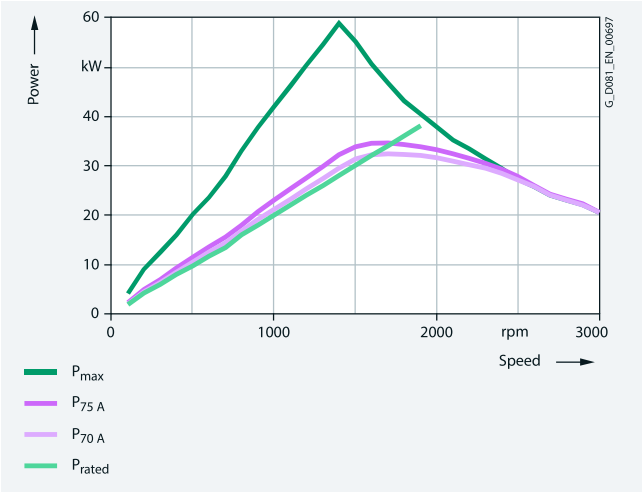

Power limit for 380 VY (50 Hz characteristic)

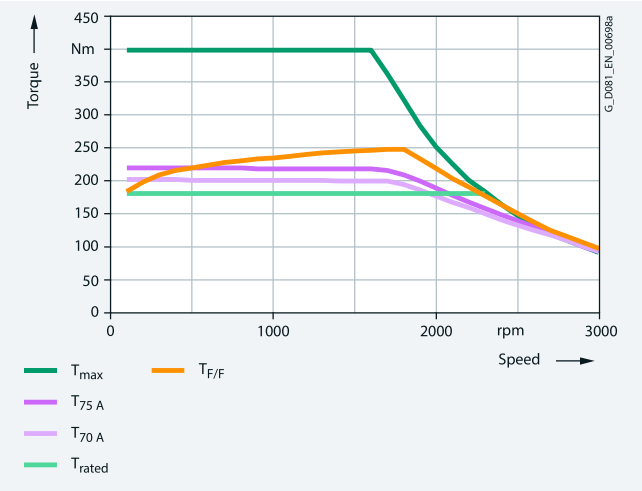

Torque limit for 440 VY (60 Hz characteristic)

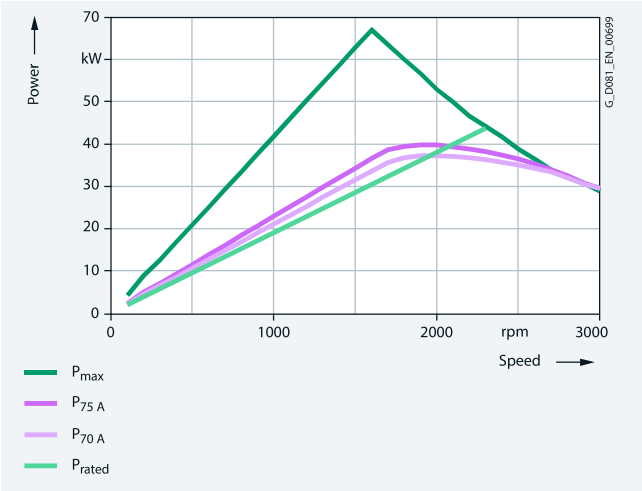

Power limit for 440 VY (60 Hz characteristic)

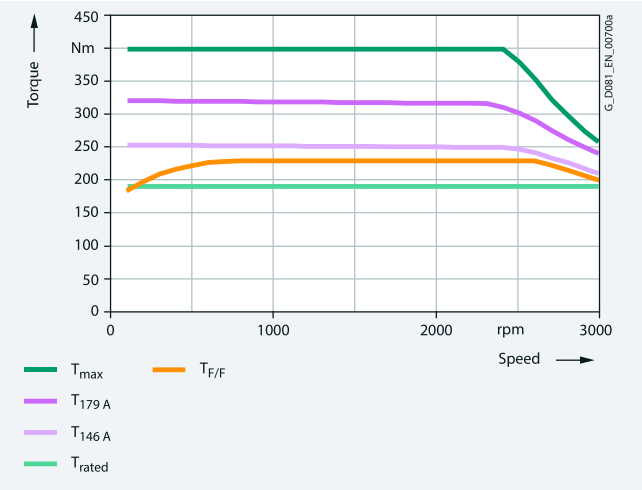

Torque limit for 380 VΔ (87 Hz characteristic)

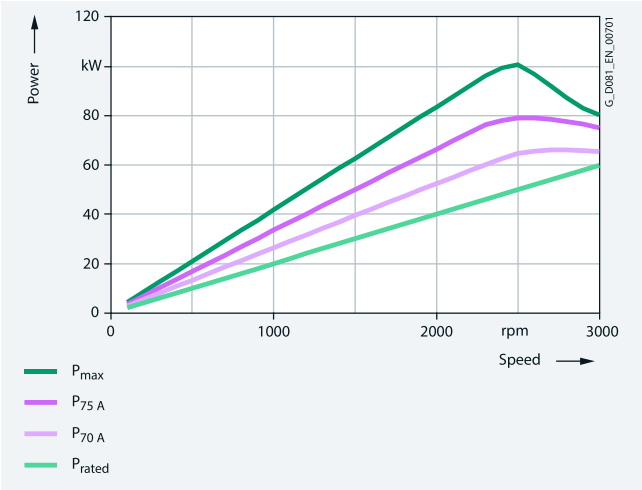

Power limit for 380 VΔ (87 Hz characteristic)

© Innomotics 2024

Technical specifications

The torque and power characteristics for converter configuration for the Innomotics SD 1FP1514-2AF4 motor, frame size 200 with the particular motor voltage and circuit:

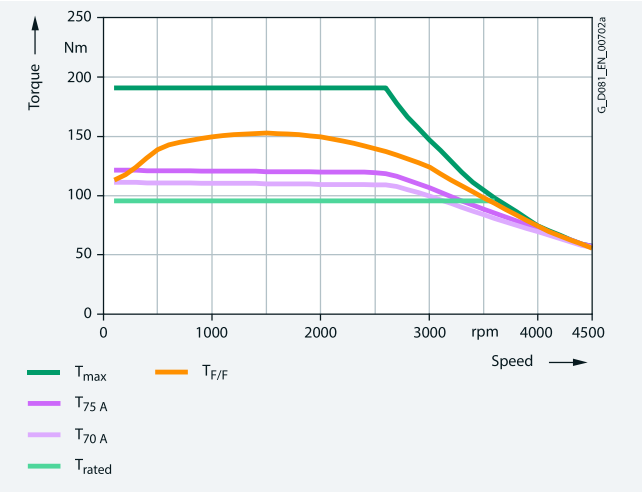

Torque limit for 380 VY (50 Hz characteristic)

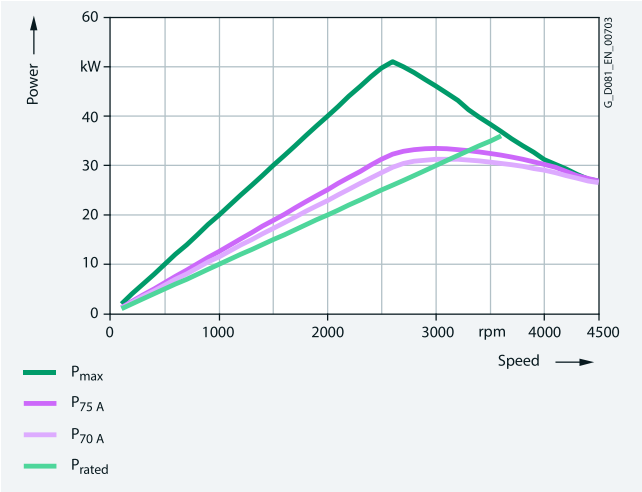

Power limit for 380 VY (50 Hz characteristic)

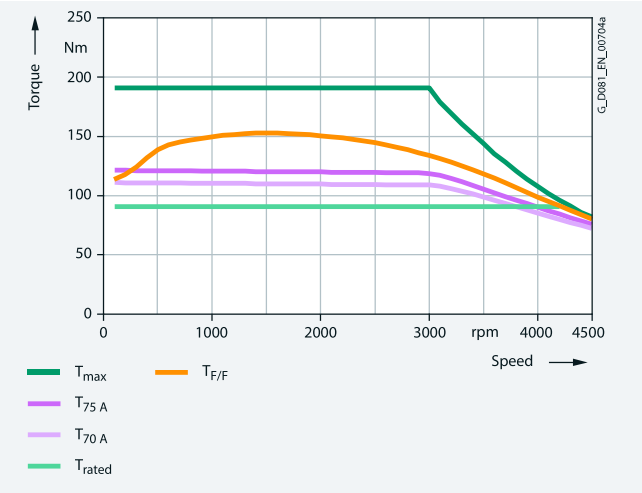

Torque limit for 440 VY (60 Hz characteristic)

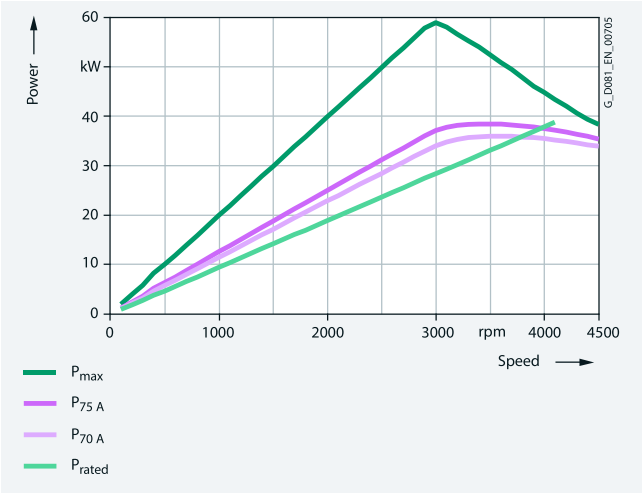

Power limit for 440 VY (60 Hz characteristic)

© Innomotics 2024

Technical specifications

The torque and power characteristics for converter configuration for the Innomotics SD 1FP1514-2AF5 motor, frame size 200 with the particular motor voltage and circuit:

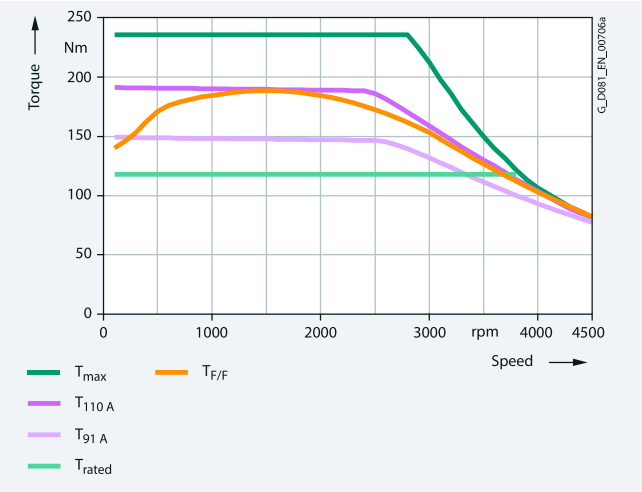

Torque limit for 380 VY (50 Hz characteristic)

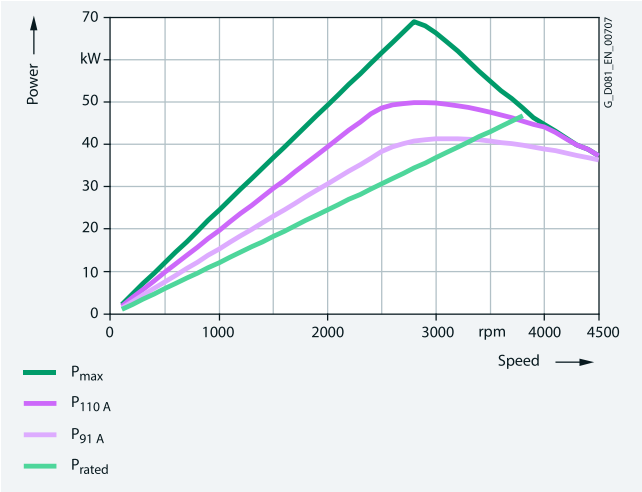

Power limit for 380 VY (50 Hz characteristic)

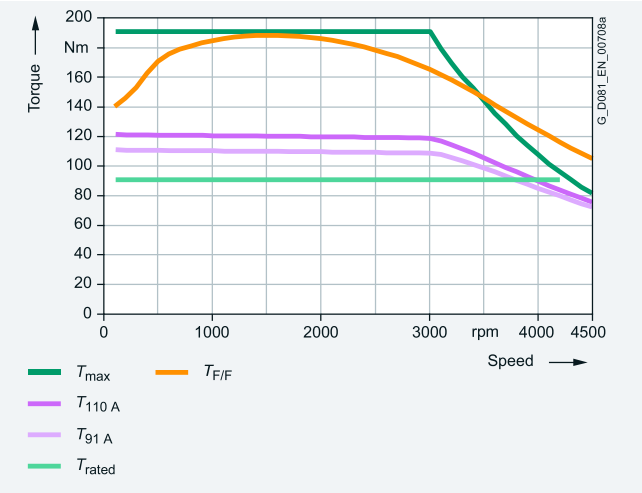

Torque limit for 440 VY (60 Hz characteristic)

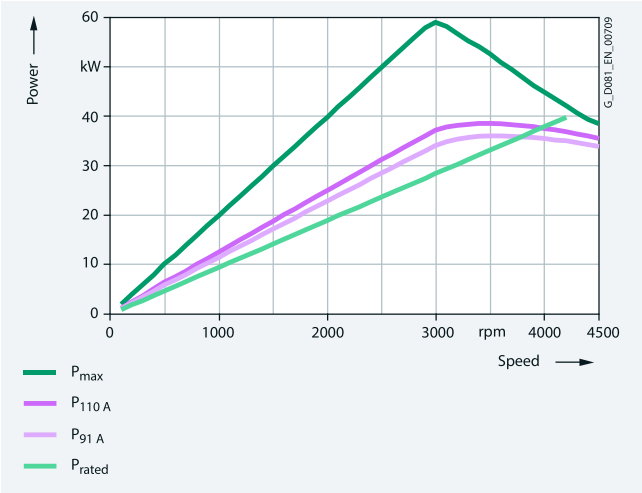

Power limit for 440 VY (60 Hz characteristic)

5

© Innomotics 2024

Technical specifications

The torque and power characteristics for converter configuration for the Innomotics SD 1FP1514-2BB0 motor, frame size 225 with the particular motor voltage and circuit:

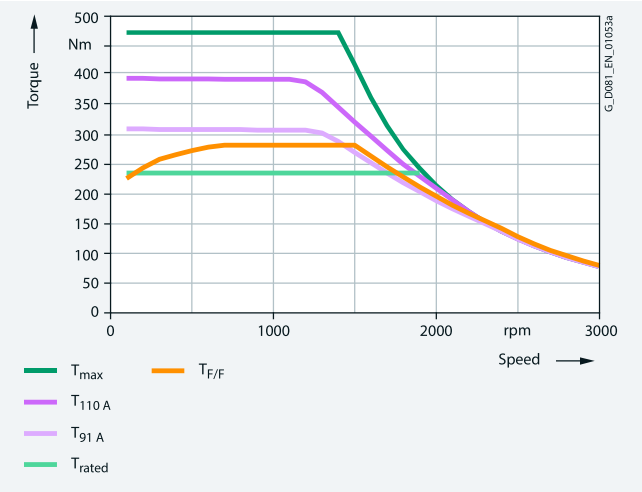

Torque limit for 380 VY (50 Hz characteristic)

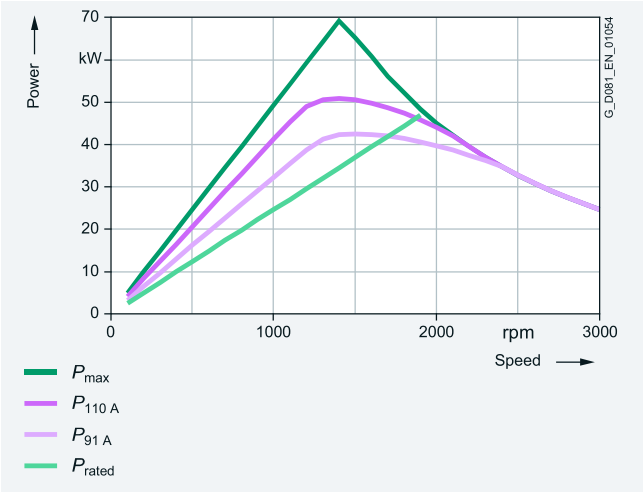

Power limit for 380 VY (50 Hz characteristic)

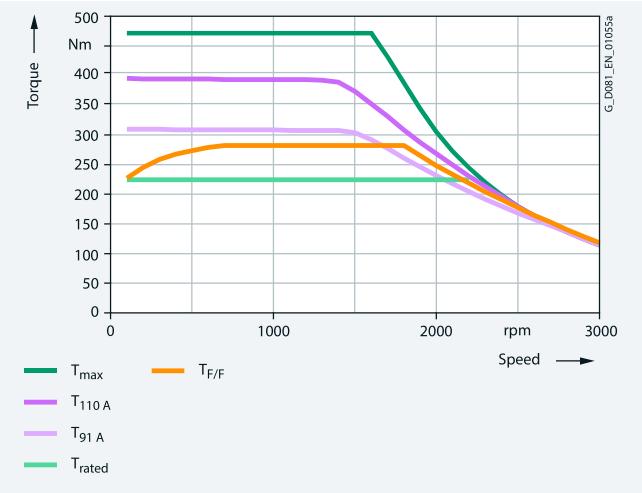

Torque limit for 440 VY (60 Hz characteristic)

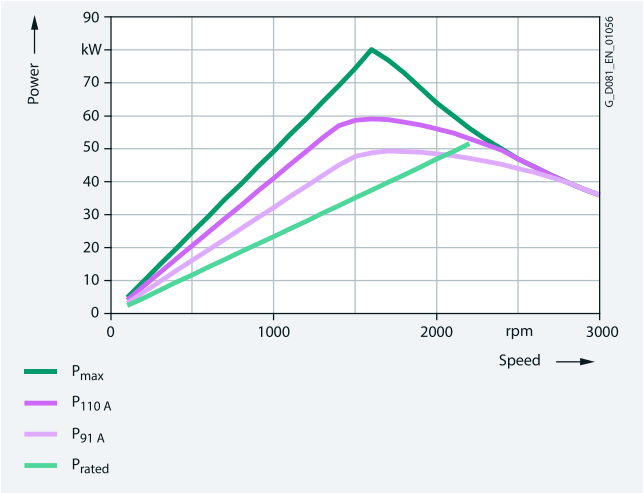

Power limit for 440 VY (60 Hz characteristic)

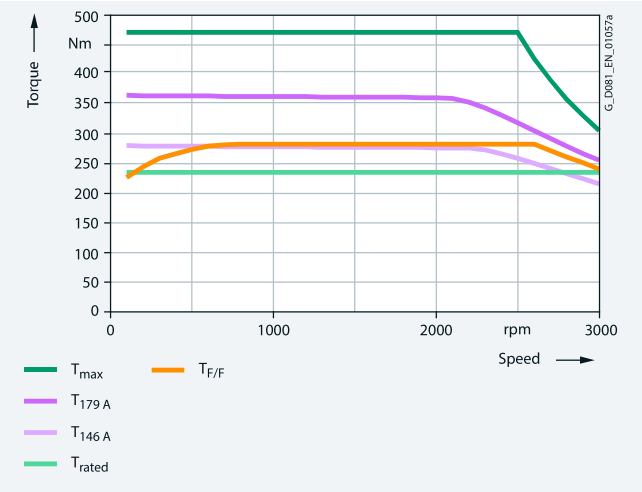

Torque limit for 380 VΔ (87 Hz characteristic)

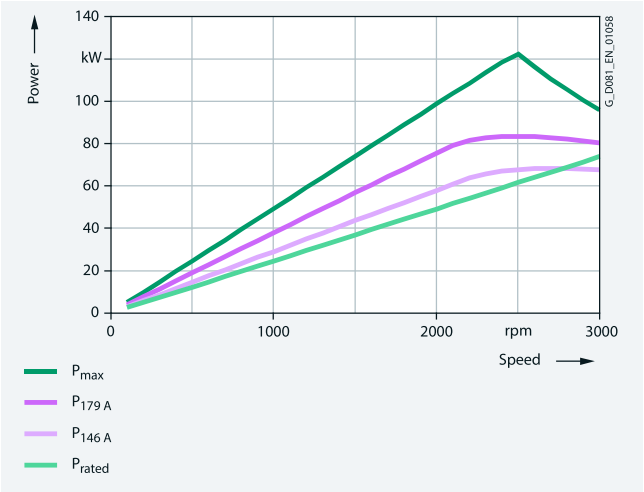

Power limit for 380 VΔ (87 Hz characteristic)

© Innomotics 2024

Technical specifications

The torque and power characteristics for converter configuration for the Innomotics SD 1FP1514-2BB2 motor, frame size 225 with the particular motor voltage and circuit:

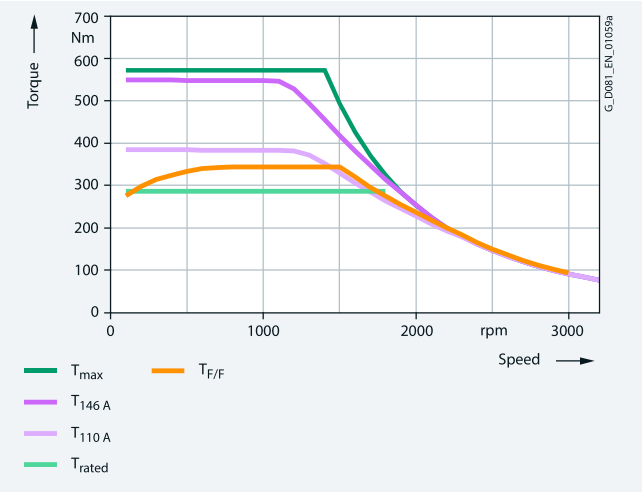

Torque limit for 380 VY (50 Hz characteristic)

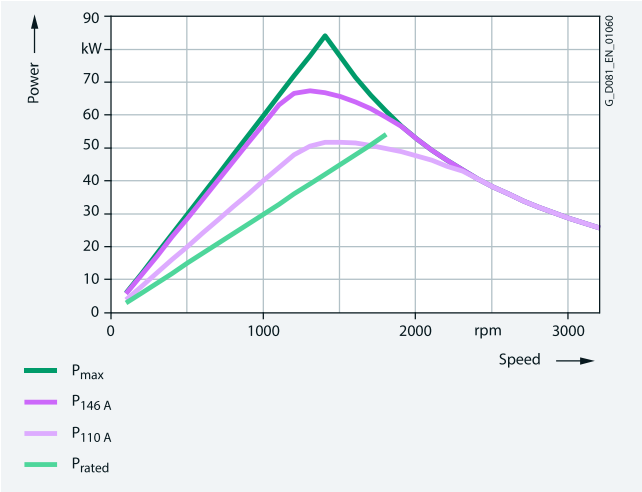

Power limit for 380 VY (50 Hz characteristic)

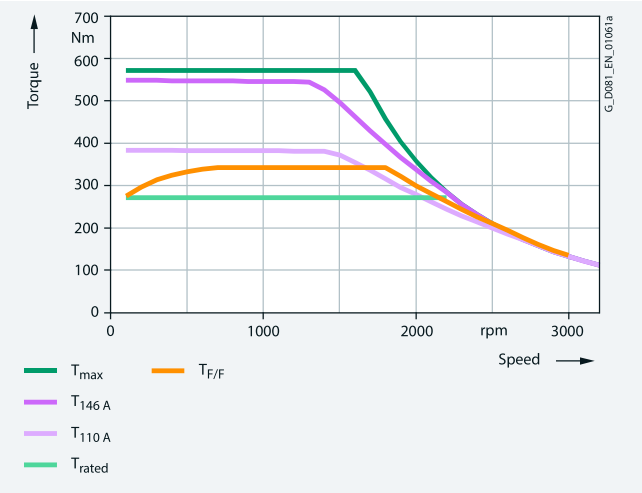

Torque limit for 440 VY (60 Hz characteristic)

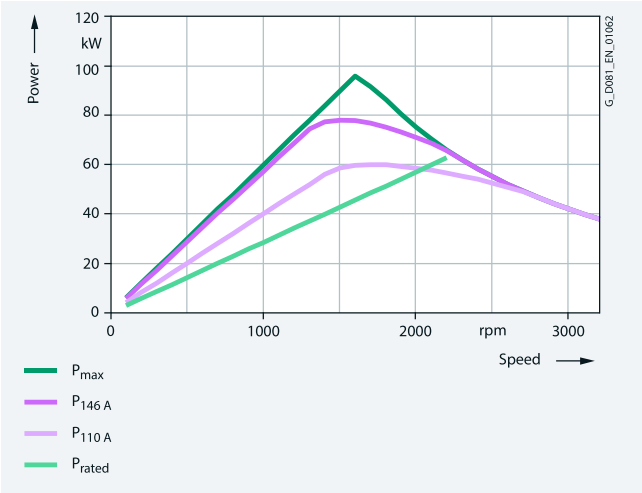

Power limit for 440 VY (60 Hz characteristic)

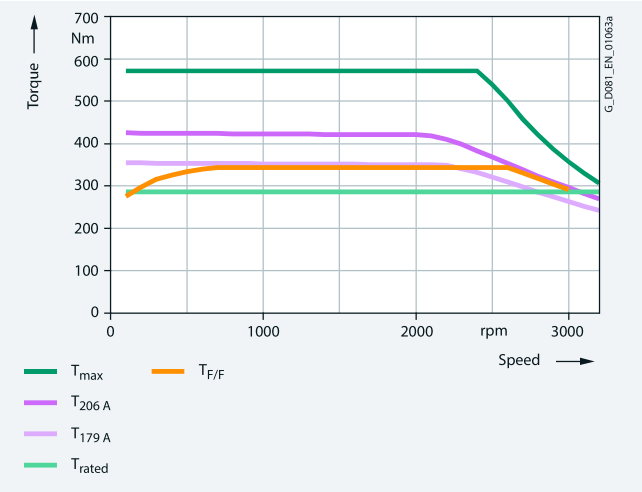

Torque limit for 380 VΔ (87 Hz characteristic)

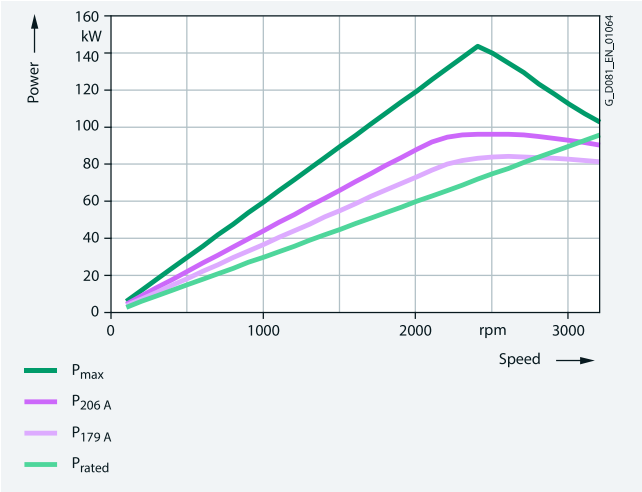

Power limit for 380 VΔ (87 Hz characteristic)

5

© Innomotics 2024

Synchronous reluctance motors for SINAMICS converters – VSD4000 line

Technical specifications

The torque and power characteristics for converter configuration for the Innomotics SD 1FP1514-2BF2 motor, frame size 225 with the particular motor voltage and circuit:

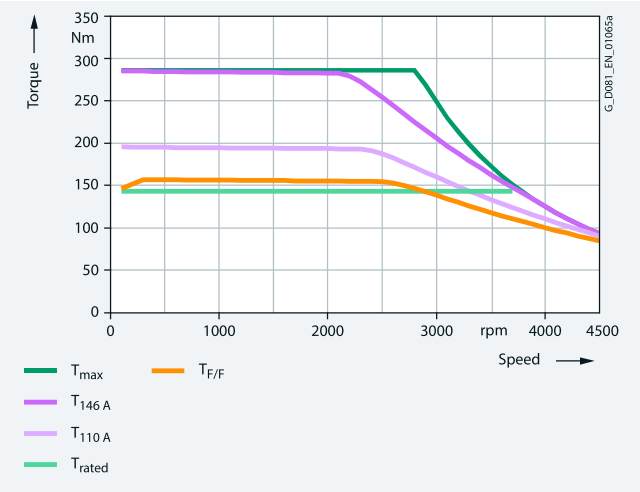

Torque limit for 380 VY (50 Hz characteristic)

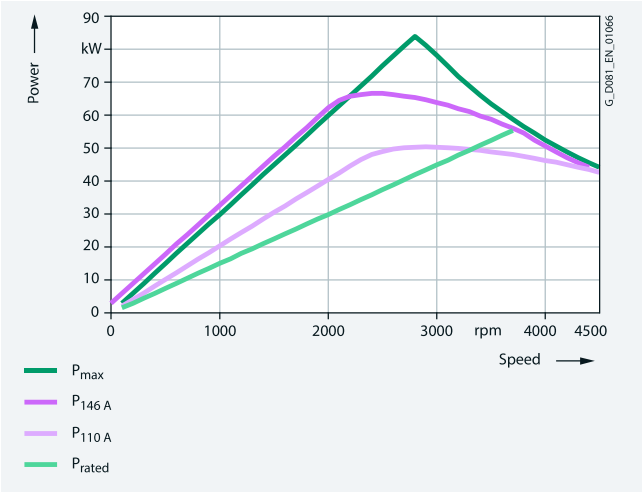

Power limit for 380 VY (50 Hz characteristic)

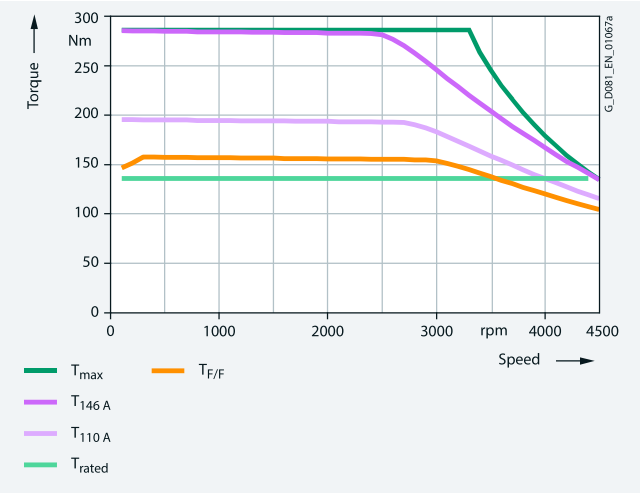

Torque limit for 440 VY (60 Hz characteristic)

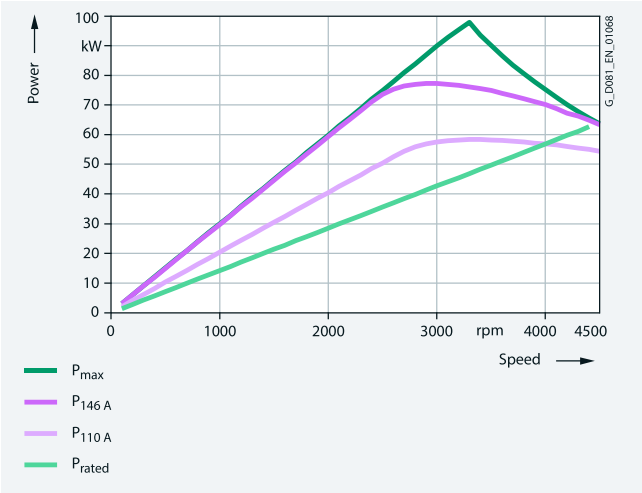

Power limit for 440 VY (60 Hz characteristic)

© Innomotics 2024

Technical specifications

Additional information

Mechanical stress and grease lifetime

When motors are operated at speeds above the rated speed, the mechanical smooth running operation and the bearings are subjected to greater mechanical stress. This reduces the grease lifetime and the bearing lifetime.

Above 100 Hz, the motors must be balanced for twice the rated frequency; it can be expected that the lubrication intervals and bearing lifetime are significantly reduced.

Motor protection

A motor protection function can be implemented using the I^2t sensing function implemented in the converter software. If required, more precise motor protection can be afforded by direct temperature measurement using PTC thermistors in the motor winding. Some converters from Siemens determine the motor temperature using the resistance of the temperature sensor. They can be set to a required temperature for alarm and tripping.

Motor connection

When connecting the motors, it is important to consider the restrictions for 1LE1 line motors as well as the maximum conductor cross-sections permitted for the converter.

Operating data for 50 Hz/60 Hz/87 Hz characteristics

Innomotics GP/SD VSD4000 line motors are designed for operation with 50 Hz, 60 Hz and 87 Hz characteristics (87 Hz characteristic up to frame size 200).

Operation with the 50/60 Hz characteristic requires Y (star or wye) connection; operation with the 87 Hz characteristic requires Δ connection.

The corresponding performance data are stamped on the rating plate as standard. An ordering option is not required.

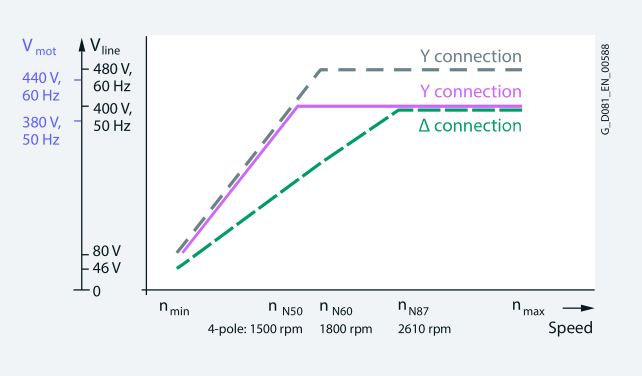

Operating characteristics of Innomotics GP/SD VSD4000 line motors [1]

Maximum operating speed

The maximum operating speed is limited by the mechanical speed limit of the motors as well as the available converter output frequency.

A significant increase in the sound pressure level can be expected when operating the motor above its rated speed (field weakening range).

Mechanical speed limits Innomotics GP/SD VSD4000 line:

Frame size	Mechanical speed limit		
	50 Hz		100 Hz
	Innomotics		Innomotics
	GP	SD	SD
	n_{max} rpm	n_{max} rpm	n_{max} rpm
80	3200	3200	6000
90	3200	3200	6000
112	3200	3200	6000
132	3200	3200	5600
160	3000	3200	4800
180	2610	3000	4600
200	2610	3000	4500
225		3000	4500

International use

As special converter motors, Innomotics GP/SD VSD4000 line motors are presently not subject to any minimum efficiency requirements in the EU and USA/Canada. However, other national certificates may be required (e.g. CSA-S safety in Canada).

5

[1] With V4.7 SP3, only a 50 Hz characteristic is possible.

© Innomotics 2024

Synchronous reluctance motors for SINAMICS converters – VSD4000 line

Technical specifications

Load characteristics for the line supply voltage: 400 V 3 AC, 50 Hz

Load characteristic $T \sim n^2$	T = const. Speed control range 1:2		1:4		1:10		Innomotics GP/SD VSD4000 line motors	SINAMICS G120 converters Operating mode: Low overload
P	P	T	P	T	P	T		
kW	kW	kW	kW	kW	kW	kW	Motor type	Converter type
Rated speed 1500 rpm								
at 1500 rpm	from 750 rpm	from 750 rpm to 1500 rpm	from 375 rpm	from 375 rpm to 1500 rpm	from 150 rpm	from 150 rpm to 1500 rpm		
0.55	0.28	3.5	0.14	3.5	0.06	3.5	1FP1.14-0DB2.-....	6SL3210-1PE11-8.L0
0.75	0.38	4.8	0.19	4.8	0.08	4.8	1FP1.14-0DB3.-....	6SL3210-1PE12-3.L0
1.1	0.55	7	0.28	7	0.11	7	1FP1.14-0EB0.-....	6SL3210-1PE13-2.L1
1.5	0.75	9.5	0.38	9.5	0.15	9.5	1FP1.14-0EB4.-....	6SL3210-1PE14-3.L1
2.2	1.1	14	0.55	14	0.22	14	1FP1.14-1BB0.-....	6SL3210-1PE16-1.L1
3	1.5	19.1	0.75	19.1	0.3	19.1	1FP1.14-1BB1.-....	6SL3210-1PE18-0.L1
4	2	25.5	1	25.5	0.4	25.5	1FP1.14-1BB2.-....	6SL3210-1PE21-1.L0
5.5	2.75	35	1.38	35	0.55	35	1FP1.14-1CB0.-....	6SL3210-1PE21-4.L0
7.5	3.75	47.5	1.88	47.5	0.75	47.5	1FP1.14-1CB2.-....	6SL3210-1PE21-8.L0
11	5.5	70	2.75	70	1.1	70	1FP1.14-1DB2.-....	6SL3210-1PE22-7.L0
15	7.5	95	3.75	95	1.5	95	1FP1.14-1DB4.-....	6SL3210-1PE23-3.L0
18.5	9.25	118	4.63	118	1.85	118	1FP1.14-1EB2.-....	6SL3210-1PE23-8.L0
22	11	140	5.5	140	2.2	140	1FP1.14-1EB4.-....	6SL3210-1PE24-5.L0
30	15	191	7.5	191	3	191	1FP1.14-2AB5.-....	6SL3210-1PE26-0.L0
37	18.5	236	9.25	236	3.7	236	1FP1514-2BB0.-....	6SL3210-1PE28-8.L0
45	22.5	286	11.25	286	4.5	286	1FP1514-2BB2.-....	6SL3210-1PE31-1.L0
Rated speed 3000 rpm								
at 3000 rpm	from 1500 rpm	from 1500 rpm to 3000 rpm	from 750 rpm	from 750 rpm to 3000 rpm	from 300 rpm	from 300 rpm to 3000 rpm		
0.75	0.38	2.4	0.19	2.4	0.08	2.4	1FP1514-0DF2.-....	6SL3210-1PE12-3.L0
1.1	0.55	3.5	0.28	3.5	0.11	3.5	1FP1514-0DF3.-....	6SL3210-1PE13-2.L1
1.5	0.75	4.8	0.38	4.8	0.15	4.8	1FP1514-0EF0.-....	6SL3210-1PE14-3.L1
2.2	1.1	7	0.55	7	0.22	7	1FP1514-0EF4.-....	6SL3210-1PE16-1.L1
3	1.5	9.5	0.75	9.5	0.3	9.5	1FP1514-1BF1.-....	6SL3210-1PE18-0.L1
4	2	12.7	1	12.7	0.4	12.7	1FP1514-1BF2.-....	6SL3210-1PE21-1.L0
5.5	2.75	17.5	1.38	17.5	0.55	17.5	1FP1514-1CF0.-....	6SL3210-1PE21-4.L0
7.5	3.75	24	1.88	24	0.75	24	1FP1514-1CF1.-....	6SL3210-1PE21-8.L0
11	5.5	35	2.75	35	1.1	35	1FP1514-1DF2.-....	6SL3210-1PE22-7.L0
15	7.5	48	3.75	48	1.5	48	1FP1514-1DF3.-....	6SL3210-1PE23-3.L0
18.5	9.25	58	4.63	58	1.85	58	1FP1514-1DF4.-....	6SL3210-1PE23-8.L0
22	11	70	5.5	70	2.2	70	1FP1514-1EF2.-....	6SL3210-1PE24-5.L0
30	15	96	7.5	96	3	96	1FP1514-2AF4.-....	6SL3210-1PE26-0.L0
37	18.5	118	9.25	118	3.7	118	1FP1514-2AF5.-....	6SL3210-1PE28-8.L0
45	22.5	143	11.25	143	4.5	143	1FP1514-2BF2.-....	6SL3210-1PE31-1.L0

Note:
The converter recommendation applies to standard ambient conditions (40 °C; 1000 m above sea level).

If, as a result of different ambient conditions, the rated motor power is significantly reduced, under certain circumstances, another converter is the optimum solution. Here, please use the configuration options for converters in the Siemens Product Configurator.

© Innomotics 2024

Technical specifications

System power loss acc. to IEC 61800-9-2: 2017

The drive system comprising Innomotics GP/SD VSD4000 line synchronous-reluctance motors and SINAMICS G120 converters is, as a result of the minimal system power losses, especially suitable for applications in the full and partial load range that are optimized to achieve minimum lifecycle costs.

General conditions:

- CU230P-2 Control Unit
- Line voltage: 400 V 3 AC 50/60 Hz
- Output voltage: Up to 0.95 x line supply input voltage
- Inverter pulse frequency:
  4 kHz to 90 kW; 2 kHz from 110 kW
- In the standby mode, the converter does not supply any power to the motor (the inverter pulses are inhibited)
- In the standby operating mode, the Control Unit is operated from the internal or external 24 V DC electronics power supply
- Converters with vector control for synchronous-reluctance motors and flux reduction
- The operating points defined in the subsequent table already take into account the standby portions

Innomotics GP/SD VSD4000 line synchronous-reluctance motors with SINAMICS G120 PM240-2 Power Modules

Rated power	Innomotics GP/SD VSD4000 1FP10/1FP15	Frame size	PM240-2 Power Module	Frame size	System power loss, relative $P_{V,rel}$ as a % referred to P_{rated} Operating points at partial load [1]							at rated load [1]	IES class acc. to IEC 61800-9-2: 2017
					0/25	0/50	0/100	50/25	50/50	50/100	100/50	100/100	
kW	Type		Type		%	%	%	%	%	%	%	%	
Line voltage 400 V 3 AC, 50/60 Hz, rated speed 1500 rpm													
0.55	1FP1.14-0DB2.-....	80 M	6SL3210-1PE11-8.L0	FSA	10.62	12.52	19.12	10.38	13.76	21.42	15.05	23.16	IES2
0.75	1FP1.14-0DB3.-....	80 M	6SL3210-1PE12-3.L1	FSA	8.59	10.28	15.78	8.38	11.32	17.78	12.64	19.59	IES2
1.1	1FP1.14-0EB0.-....	90 S	6SL3210-1PE13-2.L1	FSA	6.45	8.14	13.66	6.47	9.23	15.40	10.58	17.13	IES2
1.5	1FP1.14-0EB4.-....	90 L	6SL3210-1PE14-3.L1	FSA	5.72	7.31	12.70	5.55	8.21	14.26	9.61	16.03	IES2
2.2	1FP1.14-1BB0.-....	112 M	6SL3210-1PE16-1.L1	FSA	3.91	5.01	8.71	4.17	6.10	10.45	7.62	12.43	IES2
3	1FP1.14-1BB1.-....	112 M	6SL3210-1PE18-0.L1	FSA	3.63	4.90	9.45	3.81	5.84	11.09	7.36	12.99	IES2
4	1FP1.14-1BB2.-....	112 M	6SL3210-1PE21-1.L0	FSA	3.21	4.41	8.65	3.31	5.21	10.04	6.45	11.75	IES2
5.5	1FP1.14-1CB0.-....	132 S	6SL3210-1PE21-4.L0	FSB	2.68	3.85	7.61	2.91	4.61	9.40	5.97	10.87	IES2
7.5	1FP1.14-1CB2.-....	132 M	6SL3210-1PE21-8.L0	FSB	2.42	3.43	6.71	2.62	4.13	8.22	5.33	9.68	IES2
11	1FP1.14-1DB2.-....	160 M	6SL3210-1PE22-7.L0	FSC	2.26	3.17	6.20	2.25	3.64	7.55	4.75	9.14	IES2
15	1FP1.14-1DB4.-....	160 L	6SL3210-1PE23-3.L0	FSC	2.09	2.89	5.73	2.08	3.42	6.89	4.31	8.13	IES2
18.5	1FP1.14-1EB2.-....	180 M	6SL3210-1PE23-8.L0	FSD	1.76	2.42	4.65	1.86	3.01	6.00	3.99	7.56	IES2
22	1FP1.14-1EB4.-....	180 L	6SL3210-1PE24-5.L0	FSD	1.67	2.34	4.46	1.74	2.84	5.73	3.82	7.15	IES2
30	1FP1.14-2AB5.-....	200 L	6SL3210-1PE26-0.L0	FSD	1.65	2.41	4.82	1.53	2.60	5.58	3.36	6.80	IES2
37	1FP1514-2BB0.-....	225 S	6SL3210-1PE28-8.L0	FSE	1.29	2.02	4.49	1.64	2.73	5.54	3.49	6.74	IES2
45	1FP1514-2BB2.-....	225 M	6SL3210-1PE31-1.L0	FSE	1.18	1.91	4.41	1.51	2.63	5.38	3.34	6.72	IES2
Line voltage 400 V 3 AC, 50/60 Hz, rated speed 3000 rpm													
0.75	1FP1514-0DF2.-....	80 M	6SL3210-1PE12-3.L1	FSA	8.28	10.08	15.81	8.93	11.98	18.36	14.49	21.79	IES2
1.1	1FP1514-0DF3.-....	80 M	6SL3210-1PE13-2.L1	FSA	6.39	8.17	13.83	7.08	9.91	16.17	12.44	19.32	IES2
1.5	1FP1514-0EF0.-....	90 S	6SL3210-1PE14-3.L1	FSA	5.73	7.05	11.43	5.99	8.45	13.83	11.44	17.34	IES2
2.2	1FP1514-0EF4.-....	90 L	6SL3210-1PE16-1.L1	FSA	4.72	5.79	9.34	4.99	7.10	11.51	9.81	14.67	IES2
3	1FP1514-1BF1.-....	112 M	6SL3210-1PE18-0.L1	FSA	3.00	4.06	6.11	3.74	5.51	9.51	7.79	12.49	IES2
4	1FP1514-1BF2.-....	112 M	6SL3210-1PE21-1.L0	FSA	3.04	3.91	6.86	3.53	5.16	8.74	7.56	11.62	IES2
5.5	1FP1514-1CF0.-....	132 S	6SL3210-1PE21-4.L0	FSB	2.72	3.55	6.82	3.19	4.71	8.48	7.21	11.67	IES2
7.5	1FP1514-1CF1.-....	132 S	6SL3210-1PE21-8.L0	FSB	2.21	3.07	6.27	2.72	4.20	8.00	6.21	10.71	IES2
11	1FP1514-1DF2.-....	160 M	6SL3210-1PE22-7.L0	FSC	1.83	2.58	5.12	2.40	3.66	6.74	5.79	9.53	IES2
15	1FP1514-1DF3.-....	160 M	6SL3210-1PE23-3.L0	FSC	1.84	2.58	5.18	2.32	3.54	6.77	5.43	9.10	IES2
18.5	1FP1514-1DF4.-....	160 L	6SL3210-1PE23-8.L0	FSD	1.76	2.49	4.99	2.20	3.48	6.66	5.21	9.06	IES2
22	1FP1514-1EF2.-....	180 M	6SL3210-1PE24-5.L0	FSD	1.39	1.93	3.72	1.90	2.95	5.24	4.69	7.67	IES2
30	1FP1514-2AF4.-....	200 L	6SL3210-1PE26-0.L0	FSD	1.25	1.78	3.78	1.80	2.81	5.28	4.28	7.58	IES2
37	1FP1514-2AF5.-....	200 L	6SL3210-1PE28-8.L0	FSD	1.26	1.69	3.09	1.71	2.58	4.38	3.82	6.17	IES2
45	1FP1514-2BF2.-....	225 M	6SL3210-1PE31-1.L0	FSD	1.16	1.70	3.46	1.63	2.55	4.59	3.66	6.29	IES2

[1] Output frequency, rel. [%] referred to the rated speed/ torque, rel. [%] referred to the rated torque T_{rated}.

© Innomotics 2024

Synchronous reluctance motors for SINAMICS converters – VSD4000 line

Article number code

Selection and ordering data

The article number consists of a combination of digits and letters and is divided into three hyphenated blocks to provide a better overview, e.g.:
1FP1514-1DB42-1GF4-Z
H00

The first block (positions 1 to 7) identifies the motor type. The second block (positions 8 to 12) defines the motor frame size and length, the number of poles and power and in some cases the frequency/voltage. In the third block (positions 13 to 16), the frequency/voltage, type of construction and further design features are encoded.

For deviations in the second and third block from the catalog codes either **Z** or **90** should be used as appropriate.

Ordering data:

- Complete Article No. and order code(s) or plain text
- If a quotation has been requested, please specify the quotation number in addition to the Article No.
- When ordering a complete motor as a spare part, please specify the works serial No. for the previously supplied motor as well as the Article No.

Structure of the Article No.:	Position: 1	2	3	4	5	6	7	-	8	9	10	11	12	-	13	14	15	16		
1st to 4th position: Digit, letter, letter, digit	**Three-phase synchronous-reluctance motor** Self-ventilated by fan mounted on and driven by the rotor	1	F	P	1															
5th position: Digit	Innomotics GP – aluminum housing Innomotics SD – cast-iron housing					0 5														
6th position: Digit	Standard version Gen 2						1													
7th position: Digit	**Efficiency class** Super Premium Efficiency							4												
8th and 9th position: Digit, letter	**Motor frame size** (frame size as a combination of shaft height and overall length, encoded)								0 ... 2	A ... E										
10th position: Letter	**No. of poles** B, F: 4-pole										B F									
11th position: Digit	**Laminated core length**											0 2 4 5								
12th and 13th position: 2 digits	**Motor voltage and frequency** 380 V 3 AC, 50 Hz/440 V 3 AC, 60 Hz/380 V 3 AC, 87 Hz												2		1					
14th position: Letter	**Type of construction** (encoded with A ... V)															A ... V				
15th position: Letter	**Motor protection** (encoded with B ... Z; Z requires order code Q.. (e.g. Q3A)																B ... Z			
16th position: Digit	**Terminal box position** 4: Terminal box top (normal version), 5: Terminal box right, 6: Terminal box left																	4 ... 6		
	Special order versions: encoded – additional order code required not encoded – additional plain text required																		-	Z

5

© Innomotics 2024

Selection and ordering data

Ordering example:

Selection criteria	Requirement	Structure of the Article No.
1FP10 motor type	Standard motor for converter operation Innomotics GP VSD4000 line, aluminum version, rated power at $P_{rated\ 50}$ with 15 kW, $P_{rated\ 60}$ with 17.3 kW or $P_{rated\ 87}$ with 23.5 kW	**1FP1014-■■■■■-■■■■**
Motor frame size	160 L	**1FP1014-1D■4■-■■■■**
No. of poles	4-pole	**1FP1014-1DB4■-■■■■**
Motor voltage and frequency	380 V 3 AC, 50 Hz/440 V 3 AC, 60 Hz/380 V 3 AC, 87 Hz	**1FP1014-1DB42-1■■■**
Type of construction with special version	IM V5 with protective cover [1]	**1FP1014-1DB42-1C■■-Z** **H00**
Motor protection	Motor protection with PTC thermistors with 1 or 3 embedded temperature sensors for tripping	**1FP1014-1DB42-1C8■-Z** **H00**
Terminal box position	Terminal box right (viewed from DE)	**1FP1014-1DB42-1CB5-Z** **H00**

5

[1] Standard without protective cover – the protective cover is defined with order code **H00** and must be ordered in addition to the Article No. with **-Z** and this order code.

© Innomotics 2024

Synchronous reluctance motors for SINAMICS converters – VSD4000 line

Aluminum series Innomotics GP 1FP1014, line voltage 400 V, 50 Hz/480 V, 60 Hz/400 V, 87 Hz – self-ventilated

Selection and ordering data

$P_{rated, 50 Hz, 400 V}$	$P_{rated, 60 Hz, 480 V}$	$P_{rated, 87 Hz, 400 V}$	Frame size	Connection	Operating values at rated power f_{rated}	T_{rated}	$\eta_{rated, 4/4}$ for converter operation	$\cos\varphi_{rated, 4/4}$	I_{rated}	Aluminum series 1FP1014 Version specifically for converter operation Article No.
kW	kW	kW			Hz	Nm	%		A	
_ Insulation: Thermal class 155 (temperature class F), IP55 degree of protection, utilization in accordance with thermal class F according to B										
_ Operation with a SINAMICS G120 converter with uncontrolled infeed – rated voltage 380 V, 50 Hz/440 V, 60 Hz/380 V, 87 Hz										
1500 rpm	1800 rpm	2610 rpm	4-pole							
0.55			80 M	Y	50	3.5	83.9	0.67	1.49	1FP1014-0DB2 ■-■■■■
	0.63			Y	60	3.35	84.0	0.66	1.49	
		0.95		Δ	87	3.5	87.5	0.65	2.55	
0.75			80 M	Y	50	4.75	85.7	0.67	1.98	1FP1014-0DB3 ■-■■■■
	0.86			Y	60	4.55	85.5	0.66	2.0	
		1.3		Δ	87	4.75	89.0	0.64	3.45	
1.1			90 S	Y	50	7.0	87.2	0.69	2.8	1FP1014-0EB0 ■-■■■■
	1.27			Y	60	6.7	87.5	0.69	2.75	
		1.9		Δ	87	7.0	89.0	0.68	4.8	
1.5			90 M	Y	50	9.5	88.2	0.69	3.75	1FP1014-0EB4 ■-■■■■
	1.75			Y	60	9.3	88.5	0.68	3.8	
		2.6		Δ	87	9.5	90.5	0.67	6.5	
2.2			112 M	Y	50	14	89.5	0.71	5.3	1FP1014-1BB0 ■-■■■■
	2.55			Y	60	13.5	91.0	0.71	5.2	
		3.85		Δ	87	14.1	92.0	0.69	9.2	
3			112 M	Y	50	19.1	90.4	0.71	7.1	1FP1014-1BB1 ■-■■■■
	3.45			Y	60	18.3	91.0	0.72	6.9	
		5.2		Δ	87	19	91.8	0.70	12.3	
4			112 M	Y	50	25.5	91.1	0.72	9.3	1FP1014-1BB2 ■-■■■■
	4.55			Y	60	24.0	91.0	0.73	9.0	
		6.9		Δ	87	25	92.3	0.71	16.0	
5.5			132 S	Y	50	35	91.9	0.72	12.6	1FP1014-1CB0 ■-■■■■
	6.3			Y	60	33.5	92.4	0.73	12.3	
		9.6		Δ	87	35	92.8	0.71	22	
7.5			132 M	Y	50	47.5	92.6	0.72	17.1	1FP1014-1CB2 ■-■■■■
	8.6			Y	60	45.5	92.4	0.73	16.7	
		13.1		Δ	87	48	93.3	0.70	30.5	
11			160 M	Y	50	70	93.3	0.72	25.0	1FP1014-1DB2 ■-■■■■
	12.6			Y	60	67	93.6	0.73	24.0	
		19.1		Δ	87	70	93.6	0.71	43.5	
15			160 L	Y	50	95	93.9	0.71	34.0	1FP1014-1DB4 ■-■■■■
	17.3			Y	60	92	94.5	0.72	33.5	
		26		Δ	87	95	94.1	0.71	59.0	
18.5			180 M	Y	50	118.0	94.2	0.71	42.0	1FP1014-1EB2 ■-■■■■
	21.3			Y	60	113.0	94.5	0.72	41.0	
		32		Δ	87	118.0	95.0	0.71	73.0	
22			180 L	Y	50	140.0	94.5	0.71	50.0	1FP1014-1EB4 ■-■■■■
	25.3			Y	60	134.0	94.5	0.72	49.0	
		38.1		Δ	87	140.0	93.9	0.70	87.0	
30			200 L	Y	50	191.0	94.9	0.71	68.0	1FP1014-2AB5 ■-■■■■
	34.5			Y	60	183.0	95.4	0.72	66.0	
		52		Δ	87	191.0	94.4	0.70	118.0	
For versions, see Article No. supplements and special versions.										■-■■■■

All technical specifications refer to converter operation.

© Innomotics 2024

Synchronous reluctance motors for SINAMICS converters – VSD4000 line

Aluminum series Innomotics GP 1FP1014, line voltage 400 V, 50 Hz/480 V, 60 Hz/400 V, 87 Hz – self-ventilated

Motor type	$m_{IM\ B3}$	J	L_{pfA}, tolerance +3 dB(A) load	L_{WA}, tolerance +3 dB(A) load	Mech. speed limit	Terminal box	**Converter SINAMICS G120 – PM240-2** Operating mode: Low overload	Frame size	IES class acc. to EN 50598-2
	kg	kgm²	dB(A)	dB(A)	rpm	Type	Type [1]		
1FP1014-0DB2.-....	12	0.002	66.0	78.0	3200	TB1D00	6SL3210-1PE11-8.L0	FSA	IES 2
			67.0	79.0			6SL3210-1PE11-8.L0	FSA	IES 2
			69.0	81.0			6SL3210-1PE13-2.L0	FSA	IES 2
1FP1014-0DB3.-....	15	0.0026	66.0	78.0	3200	TB1D00	6SL3210-1PE12-3.L0	FSA	IES 2
			67.0	79.0			6SL3210-1PE12-3.L0	FSA	IES 2
			69.0	81.0			6SL3210-1PE14-3.L0	FSA	IES 2
1FP1014-0EB0.-....	18	0.0034	58.0	70.0	3200	TB1D00	6SL3210-1PE13-2.L1	FSA	IES 2
			59.0	71.0			6SL3210-1PE13-2.L1	FSA	IES 2
			69.0	81.0			6SL3210-1PE16-1.L1	FSA	IES 2
1FP1014-0EB4.-....	22	0.0043	58.0	70.0	3200	TB1D00	6SL3210-1PE14-3.L1	FSA	IES 2
			59.0	71.0			6SL3210-1PE14-3.L1	FSA	IES 2
			69.0	81.0			6SL3210-1PE18-0.L1	FSA	IES 2
1FP1014-1BB0.-....	34	0.0092	58.0	70.0	3200	TB1F00	6SL3210-1PE16-1.L1	FSA	IES 2
			58.0	70.0			6SL3210-1PE16-1.L1	FSA	IES 2
			65.0	77.0			6SL3210-1PE21-1.L0	FSA	IES 2
1FP1014-1BB1.-....	34	0.0092	59.0	71.0	3200	TB1F00	6SL3210-1PE18-0.L1	FSA	IES 2
			59.0	71.0			6SL3210-1PE18-0.L1	FSA	IES 2
			65.0	77.0			6SL3210-1PE21-4.L0	FSA	IES 2
1FP1014-1BB2.-....	39	0.0114	59.0	71.0	3200	TB1F00	6SL3210-1PE21-1.L0	FSA	IES 2
			60.0	72.0			6SL3210-1PE21-1.L0	FSA	IES 2
			69.0	81.0			6SL3210-1PE21-8.L0	FSB	IES 2
1FP1014-1CB0.-....	52	0.0201	69.0	81.0	3200	TB1H00	6SL3210-1PE21-4.L0	FSB	IES 2
			68.0	80.0			6SL3210-1PE21-4.L0	FSB	IES 2
			69.0	81.0			6SL3210-1PE22-7.L0	FSC	IES 2
1FP1014-1CB2.-....	66	0.0277	62.0	74.0	3200	TB1H00	6SL3210-1PE21-8.L0	FSB	IES 2
			64.0	76.0			6SL3210-1PE21-8.L0	FSB	IES 2
			68.0	80.0			6SL3210-1PE23-3.L0	FSC	IES 2
1FP1014-1DB2.-....	86	0.0485	69.0	81.0	3000	TB1J00	6SL3210-1PE22-7.L0	FSC	IES 2
			70.0	82.0			6SL3210-1PE22-7.L0	FSC	IES 2
			75.0	87.0			6SL3210-1PE23-8.L0	FSD	IES 2
1FP1014-1DB4.-....	104	0.0624	71.0	83.0	3000	TB1J00	6SL3210-1PE23-3.L0	FSC	IES 2
			72.0	84.0			6SL3210-1PE23-3.L0	FSC	IES 2
			76.0	88.0			6SL3210-1PE26-0.L0	FSD	IES 2
1FP1014-1EB2.-....	140	0.1161	69.0	82.0	2610	TB1J00	6SL3210-1PE23-8.L0	FSD	IES 2
			70.0	83.0			6SL3210-1PE24-5.L0	FSD	IES 2
			76.0	89.0			6SL3210-1PE27-5.L0	FSE	IES 2
1FP1014-1EB4.-....	152	0.1315	69.0	82.0	2610	TB1J00	6SL3210-1PE24-5.L0	FSD	IES 2
			70.0	83.0			6SL3210-1PE26-0.L0	FSD	IES 2
			76.0	89.0			6SL3210-1PE28-8.L0	FSE	IES 2
1FP1014-2AB5.-....	187	0.1884	68.0	81.0	2610	TB1L00	6SL3210-1PE26-0.L0	FSE	IES 2
			70.0	83.0			6SL3210-1PE27-5.L0	FSD	IES 2
			73.0	86.0			6SL3210-1PE31-5.L0	FSF	IES 2

[1] In addition to the Power Module, a CU230P-2 Control Unit and an Operator Panel are required (see Catalog D 31 and/or D 35).

© Innomotics 2024

Synchronous reluctance motors for SINAMICS converters – VSD4000 line

Cast-iron series Innomotics SD 1FP1514, line voltage 400 V, 50 Hz/460 V, 60 Hz/400 V, 87 Hz – self-ventilated

Selection and ordering data

$P_{rated, 50 Hz, 400 V}$	$P_{rated, 60 Hz, 480 V}$	$P_{rated, 87 Hz, 400 V}$	Frame size	Connection	Operating values at rated power f_{rated}	T_{rated}	$\eta_{rated, 4/4}$ for converter operation	$\cos\varphi_{rated, 4/4}$	I_{rated}	Cast-iron series 1FP1514 Version specifically for converter operation Article No.
kW	kW	kW			Hz	Nm	%		A	
_ Insulation: Thermal class 155 (temperature class F), IP55 degree of protection, utilization in accordance with thermal class F according to B										
_ Operation with a SINAMICS G120 converter with uncontrolled infeed – rated voltage 380 V, 50 Hz/440 V, 60 Hz/380 V, 87 Hz										
3000 rpm	3600 rpm		4-pole							
0.75			80 M	Y	100	2.4	83.5	0.65	2.1	1FP1514-0DF2 ■-■■■■
	0.86			Y	120	2.3	82.5	0.65	2.1	
1.1			80 M	Y	100	3.5	85.2	0.66	2.95	1FP1514-0DF3 ■-■■■■
	1.27			Y	120	3.35	85.5	0.66	2.95	
1.5			90 S	Y	100	4.75	86.5	0.66	4	1FP1514-0EF0 ■-■■■■
	1.75			Y	120	4.65	86.5	0.67	3.95	
2.2			90 L	Y	100	7	88	0.66	5.8	1FP1514-0EF4 ■-■■■■
	2.55			Y	120	6.8	88.5	0.68	5.6	
3.0			112 M	Y	100	9.5	89.1	0.71	7.2	1FP1514-1BF1 ■-■■■■
	3.45			Y	120	9.2	89.5	0.71	7.1	
4.0			112 M	Y	100	12.7	90	0.69	9.8	1FP1514-1BF2 ■-■■■■
	4.55			Y	120	12.1	89.5	0.7	9.5	
5.5			132 S	Y	100	17.5	90.9	0.71	12.9	1FP1514-1CF0 ■-■■■■
	6.3			Y	120	16.7	90.2	0.72	12.7	
7.5			132 S	Y	100	24.0	91.7	0.72	17.3	1FP1514-1CF1 ■-■■■■
	8.6			Y	120	23.0	91.7	0.72	17.1	
11			160 M	Y	100	35	92.6	0.73	24.5	1FP1514-1DF2 ■-■■■■
	12.6			Y	120	33.5	92.4	0.73	24.5	
15			160 M	Y	100	47.5	93.3	0.72	34	1FP1514-1DF3 ■-■■■■
	17.3			Y	120	46.0	93.0	0.73	33.5	
18.5			160 L	Y	100	59	93.7	0.72	41.5	1FP1514-1DF4 ■-■■■■
	21.3			Y	120	57	93.0	0.73	41.0	
22			180 M	Y	100	70	94.0	0.71	50	1FP1514-1EF2 ■-■■■■
	25.3			Y	120	67	93.0	0.71	50	
30			200 L	Y	100	95	94.5	0.72	67	1FP1514-2AF4 ■-■■■■
	34.5			Y	120	92	94.1	0.72	67	
37			200 L	Y	100	118	94.8	0.72	82	1FP1514-2AF5 ■-■■■■
	42.5			Y	120	113	94.5	0.73	81	
45			225 M	Y	100	143	95.0	0.73	99	1FP1514-2BF2 ■-■■■■
	52			Y	120	138	94.5	0.73	99	
For versions, see Article No. supplements and special versions.										■-■■■■

All technical specifications refer to converter operation.

© Innomotics 2024

Synchronous reluctance motors for SINAMICS converters – VSD4000 line

Cast-iron series Innomotics SD 1FP1514, line voltage 400 V, 50 Hz/460 V, 60 Hz/400 V, 87 Hz – self-ventilated

Motor type	$m_{IM\ B3}$	J	L_{pfA}, tolerance +3 dB(A) load	L_{WA}, tolerance +3 dB(A) load	Mech. speed limit	Terminal box	**Converter SINAMICS G120 – PM240-2** Operating mode: Low overload	Frame size	IES class acc. to EN 50598-2
	kg	kgm²	dB(A)	dB(A)	rpm	Type	Type [1]		
1FP1514-0DF2.-....	17	0.0013	68.0	80.0	6000	TB1D00	6SL3210-1PE12-3.L0	FSA	IES 2
							6SL3210-1PE12-3.L0	FSA	IES 2
1FP1514-0DF3.-....	18	0.0015	68.0	80.0	6000	TB1D00	6SL3210-1PE13-2.L1	FSA	IES 2
							6SL3210-1PE13-2.L1	FSA	IES 2
1FP1514-0EF0.-....	24	0.0022	66.0	78.0	6000	TB1D00	6SL3210-1PE14-3.L1	FSA	IES 2
			70.0	82.0			6SL3210-1PE14-3.L1	FSA	IES 2
1FP1514-0EF4.-....	27	0.0031	66.0	78.0	6000	TB1D00	6SL3210-1PE16-1.L1	FSA	IES 2
			70.0	82.0			6SL3210-1PE16-1.L1	FSA	IES 2
1FP1514-1BF1.-....	39	0.0064	63.0	75.0	6000	TB1F00	6SL3210-1PE18-0.L1	FSA	IES 2
			67.0	79.0			6SL3210-1PE18-0.L1	FSA	IES 2
1FP1514-1BF2.-....	41	0.0071	69.0	81.0	6000	TB1F00	6SL3210-1PE21-1.L0	FSA	IES 2
							6SL3210-1PE21-1.L0	FSA	IES 2
1FP1514-1CF0.-....	53	0.0133	70.0	82.0	5600	TB1H01	6SL3210-1PE21-4.L0	FSB	IES 2
			72.0	84.0			6SL3210-1PE21-4.L0	FSB	IES 2
1FP1514-1CF1.-....	56	0.016	70.0	82.0	5600	TB1H01	6SL3210-1PE21-8.L0	FSB	IES 2
			72.0	84.0			6SL3210-1PE21-8.L0	FSB	IES 2
1FP1514-1DF2.-....	89	0.0323	72.0	84.0	4800	TB1J01	6SL3210-1PE22-7.L0	FSC	IES 2
			76.0	88.0			6SL3210-1PE22-7.L0	FSC	IES 2
1FP1514-1DF3.-....	96	0.0377	72.0	84.0	4800	TB1J01	6SL3210-1PE23-3.L0	FSC	IES 2
			76.0	88.0			6SL3210-1PE23-3.L0	FSC	IES 2
1FP1514-1DF4.-....	102	0.0444	75.0	87.0	4800	TB1J01	6SL3210-1PE23-8.L0	FSC	IES 2
			76.0	88.0			6SL3210-1PE24-5.L0	FSC	IES 2
1FP1514-1EF2.-....	144	0.0873	73.0	86.0	4600	TB1J00	6SL3210-1PE24-5.L0		IES 2
			75.0	88.0			6SL3210-1PE26-0.L0		IES 2
1FP1514-2AF4.-....	187	0.1277	73.0	86.0	4500	TB1L01	6SL3210-1PE26-0.L0		IES 2
			76.0	89.0			6SL3210-1PE27-5.L0		IES 2
1FP1514-2AF5.-....	222	0.1876	73.0	86.0	4500	TB1L01	6SL3210-1PE28-8.L0		IES 2
			76.0	89.0			6SL3210-1PE28-8.L0		IES 2
1FP1514-2BF2.-....	286	0.3599	78.0	92.0	4500	TB1L01	6SL3210-1PE31-1.L0		IES 2
			81.0	95.0			6SL3210-1PE31-1.L0		IES 2

[1] In addition to the Power Module, a CU230P-2 Control Unit and an Operator Panel are required (see Catalog D 31 and/or D 35).

© Innomotics 2024

Synchronous reluctance motors for SINAMICS converters – VSD4000 line

Cast-iron series Innomotics SD 1FP1514, line voltage 400 V, 50 Hz/460 V, 60 Hz/400 V, 87 Hz – self-ventilated

Selection and ordering data

$P_{rated, 50 Hz, 400 V}$	$P_{rated, 60 Hz, 480 V}$	$P_{rated, 87 Hz, 400 V}$	Frame size	Connection	Operating values at rated power f_{rated}	T_{rated}	$\eta_{rated, 4/4}$ for converter operation	$\cos\varphi_{rated, 4/4}$	I_{rated}	Cast-iron series 1FP1514 Version specifically for converter operation Article No.
kW	kW	kW			Hz	Nm	%		A	
_ Insulation: Thermal class 155 (temperature class F), IP55 degree of protection, utilization in accordance with thermal class F according to B										
_ Operation with a SINAMICS G120 converter with uncontrolled infeed – rated voltage 380 V, 50 Hz/440 V, 60 Hz/380 V, 87 Hz										
1500 rpm	1800 rpm	2610 rpm	4-pole							
0.55			80 M	Y	50	3.5	83.9	0.67	1.49	1FP1514-0DB2 ■-■■■■
	0.63			Y	60	3.35	84.0	0.66	1.49	
		0.95		Δ	87	3.5	87.5	0.65	2.55	
0.75			80 M	Y	50	4.75	85.7	0.67	1.98	1FP1514-0DB3 ■-■■■■
	0.86			Y	60	4.55	85.5	0.66	2.0	
		1.3		Δ	87	4.75	89.0	0.64	3.45	
1.1			90 S	Y	50	7.0	87.2	0.69	2.8	1FP1514-0EB0 ■-■■■■
	1.27			Y	60	6.7	87.5	0.69	2.75	
		1.9		Δ	87	7.0	89.0	0.68	4.8	
1.5			90 M	Y	50	9.5	88.2	0.69	3.75	1FP1514-0EB4 ■-■■■■
	1.75			Y	60	9.3	88.5	0.68	3.8	
		2.6		Δ	87	9.5	90.5	0.67	6.5	
2.2			112 M	Y	50	14	89.5	0.71	5.3	1FP1514-1BB0 ■-■■■■
	2.55			Y	60	13.5	91.0	0.71	5.2	
		3.85		Δ	87	14.1	92.0	0.69	9.2	
3			112 M	Y	50	19.1	90.4	0.71	7.1	1FP1514-1BB1 ■-■■■■
	3.45			Y	60	18.3	91.0	0.72	6.9	
		5.2		Δ	87	19	91.8	0.70	12.3	
4			112 M	Y	50	25.5	91.1	0.72	9.3	1FP1514-1BB2 ■-■■■■
	4.55			Y	60	24.0	91.0	0.73	9.0	
		6.9		Δ	87	25	92.3	0.71	16	
5.5			132 S	Y	50	35	91.9	0.72	12.6	1FP1514-1CB0 ■-■■■■
	6.3			Y	60	33.5	92.4	0.73	12.3	
		9.6		Δ	87	35	92.8	0.71	22	
7.5			132 M	Y	50	47.5	92.6	0.72	17.1	1FP1514-1CB2 ■-■■■■
	8.6			Y	60	45.5	92.4	0.73	16.7	
		13.1		Δ	87	48	93.3	0.70	30.5	
11			160 M	Y	50	70	93.3	0.72	25.0	1FP1514-1DB2 ■-■■■■
	12.6			Y	60	67	93.6	0.73	24.0	
		19.1		Δ	87	70	93.6	0.71	43.5	
15			160 L	Y	50	95	93.9	0.71	34.0	1FP1514-1DB4 ■-■■■■
	17.3			Y	60	92	94.5	0.72	33.5	
		26		Δ	87	95	94.1	0.71	59.0	
18.5			180 M	Y	50	118.0	94.2	0.71	42.0	1FP1514-1EB2 ■-■■■■
	21.3			Y	60	113.0	94.5	0.72	41.0	
		32		Δ	87	118.0	95.0	0.71	73.0	
22			180 L	Y	50	140.0	94.5	0.71	50.0	1FP1514-1EB4 ■-■■■■
	25.3			Y	60	134.0	94.5	0.72	49.0	
		38.1		Δ	87	140.0	93.9	0.70	87.0	
30			200 L	Y	50	191.0	94.9	0.71	68.0	1FP1514-2AB5 ■-■■■■
	34.5			Y	60	183.0	95.4	0.72	66.0	
		52		Δ	87	191.0	94.4	0.70	118.0	
37			225 S	Y	50	235	95.2	0.75	79	1FP1514-2BB0 ■-■■■■
	42.5			Y	60	225	95.4	0.75	78	
		64		Δ	87	235	95.4	0.75	136	
45			225 M	Y	50	285	95.4	0.75	96	1FP1514-2BB2 ■-■■■■
	52			Y	60	275	95.8	0.75	95	
		78		Δ	87	285	95.6	0.75	165	
For versions, see Article No. supplements and special versions.										■-■■■■

All technical specifications refer to converter operation.

© Innomotics 2024

Synchronous reluctance motors for SINAMICS converters – VSD4000 line

Cast-iron series Innomotics SD 1FP1514, line voltage 400 V, 50 Hz/460 V, 60 Hz/400 V, 87 Hz – self-ventilated

Motor type	$m_{IM\ B3}$	J	L_{pfA}, tolerance +3 dB(A) load	L_{WA}, tolerance +3 dB(A) load	Mech. speed limit	Terminal box	**Converter SINAMICS G120 – PM240-2** Operating mode: Low overload	Frame size	IES class acc. to EN 50598-2
	kg	kgm²	dB(A)	dB(A)	rpm	Type	Type [1]		
1FP1514-0DB2.-....	19	0.0019	66.0	78.0	3200	TB1D01	6SL3210-1PE11-8.L0	FSA	IES 2
			67.0	79.0			6SL3210-1PE11-8.L0	FSA	IES 2
			69.0	81.0			6SL3210-1PE13-2.L0	FSA	IES 2
1FP1514-0DB3.-....	22,5	0.0025	66.0	78.0	3200	TB1D01	6SL3210-1PE12-3.L0	FSA	IES 2
			67.0	79.0			6SL3210-1PE12-3.L0	FSA	IES 2
			69.0	81.0			6SL3210-1PE14-3.L0	FSA	IES 2
1FP1514-0EB0.-....	18	0.0034	58.0	70.0	3200	TB1D01	6SL3210-1PE13-2.L1	FSA	IES 2
			59.0	71.0			6SL3210-1PE13-2.L1	FSA	IES 2
			69.0	81.0			6SL3210-1PE16-1.L1	FSA	IES 2
1FP1514-0EB4.-....	26	0.0043	58.0	70.0	3200	TB1D01	6SL3210-1PE14-3.L1	FSA	IES 2
			59.0	71.0			6SL3210-1PE14-3.L1	FSA	IES 2
			69.0	81.0			6SL3210-1PE18-0.L1	FSA	IES 2
1FP1514-1BB0.-....	46	0.0092	58.0	70.0	3200	TB1F01	6SL3210-1PE16-1.L1	FSA	IES 2
			58.0				6SL3210-1PE16-1.L1	FSA	IES 2
			65.0	77.0			6SL3210-1PE21-1.L0	FSA	IES 2
1FP1514-1BB1.-....	46	0.0092	59.0	71.0	3200	TB1F01	6SL3210-1PE18-0.L1	FSA	IES 2
			59.0				6SL3210-1PE18-0.L1	FSA	IES 2
			65.0	77.0			6SL3210-1PE21-4.L0	FSA	IES 2
1FP1514-1BB2.-....	51	0.0114	59.0	71.0	3200	TB1F01	6SL3210-1PE21-1.L0	FSA	IES 2
			60.0	72.0			6SL3210-1PE21-1.L0	FSA	IES 2
			69.0	81.0			6SL3210-1PE21-8.L0	FSB	IES 2
1FP1514-1CB0.-....	68	0.0201	69.0	81.0	3200	TB1H01	6SL3210-1PE21-4.L0	FSB	IES 2
			68.0	80.0			6SL3210-1PE21-4.L0	FSB	IES 2
			69.0	81.0			6SL3210-1PE22-7.L0	FSC	IES 2
1FP1514-1CB2.-....	80	0.0277	62.0	74.0	3200	TB1H01	6SL3210-1PE21-8.L0	FSB	IES 2
			64.0	76.0			6SL3210-1PE21-8.L0	FSB	IES 2
			68.0	80.0			6SL3210-1PE23-3.L0	FSC	IES 2
1FP1514-1DB2.-....	106	0.0485	69.0	81.0	3200	TB1J01	6SL3210-1PE22-7.L0	FSC	IES 2
			70.0	82.0			6SL3210-1PE22-7.L0	FSC	IES 2
			75.0	87.0			6SL3210-1PE23-8.L0	FSD	IES 2
1FP1514-1DB4.-....	126	0.0624	71.0	83.0	3200	TB1J01	6SL3210-1PE23-3.L0	FSC	IES 2
			72.0	84.0			6SL3210-1PE23-3.L0	FSC	IES 2
			76.0	88.0			6SL3210-1PE26-0.L0	FSD	IES 2
1FP1514-1EB2.-....	167	0.1155	69.0	82.0	3000	TB1J01	6SL3210-1PE23-8.L0	FSD	IES 2
			70.0	83.0			6SL3210-1PE24-5.L0	FSD	IES 2
			76.0	89.0			6SL3210-1PE27-5.L0	FSE	IES 2
1FP1514-1EB4.-....	185	0.1315	69.0	82.0	3000	TB1J01	6SL3210-1PE24-5.L0	FSD	IES 2
			70.0	83.0			6SL3210-1PE26-0.L0	FSD	IES 2
			76.0	89.0			6SL3210-1PE28-8.L0	FSE	IES 2
1FP1514-2AB5.-....	222	0.1876	68.0	81.0	3000	TB1L01	6SL3210-1PE26-0.L0	FSE	IES 2
			70.0	83.0			6SL3210-1PE27-5.L0	FSD	IES 2
			73.0	86.0			6SL3210-1PE31-5.L0	FSF	IES 2
1FP1514-2BB0.-....	305	0.4032	70.0	84.0	3000	TB1L01	6SL3210-1PE28-8.L0	FSE	IES 2
			71.0	85.0			6SL3210-1PE28-8.L0	FSE	IES 2
			77.0	91.0			6SL3210-1PE31-5.L0	FSF	IES 2
1FP1514-2BB2.-....	333	0.4753	73.0	87.0	3000	TB1L01	6SL3210-1PE31-1.L0	FSE	IES 2
			71.0	85.0			6SL3210-1PE31-1.L0	FSE	IES 2
			77.0	91.0			6SL3210-1PE31-8.L0	FSF	IES 2

[1] In addition to the Power Module, a CU230P-2 Control Unit and an Operator Panel are required (see Catalog D 31 and/or D 35).

© Innomotics 2024

Synchronous reluctance motors for SINAMICS converters – VSD4000 line

Aluminum series Innomotics GP 1FP1014

Selection and ordering data

Voltages	Article No. supplement			Frame size							Motor version
	Voltage code 12th and 13th position of the Article No.		Additional identification code with order code and plain text if required	80	90	112	132	160	180	200	
				1FP1014							Super Premium Efficiency
1FP1014-....	■ -	■ ...	Order code								
Voltage at 50 Hz or 60 Hz											
Line voltage: 50 Hz, 400 V 60 Hz, 480 V	2	1	–	☐	☐	☐	☐	☐	☐	☐	

☐ Standard version

5

© Innomotics 2024

Synchronous reluctance motors for SINAMICS converters – VSD4000 line

Selection and ordering data

Voltages	Article No. supplement			Frame size								Motor version
	Voltage code 12th and 13th position of the Article No.		Additional identification code with order code and plain text if required	80	90	112	132	160	180	200	225	
				1FP1514								Super Premium Efficiency
1FP1514-....	■ -	■ ...	Order code									
Voltage at 50 Hz or 60 Hz												
Line voltage: 50 Hz, 400 V 60 Hz, 480 V	2	1	–	☐	☐	☐	☐	☐	☐	☐	☐	

☐ Standard version

5

© Innomotics 2024

Synchronous reluctance motors for SINAMICS converters – VSD4000 line

Aluminum series Innomotics GP 1FP1014

Selection and ordering data

Types of construction	Article No. supplement: Type of construction code letter 14th position of the Article No.	Article No. supplement: For types of construction with order code(s) Article No. with additional identification code **-Z**	Frame size 80	90	112	132	160	180	200	Motor version
			1FP1014							Super Premium Efficiency
1FP1014- . . . . . - .	**■ . . (-Z)**	Order code								
Without flange										
IM B3 [1) 2)]	**A**	**–**	☐	☐	☐	☐	☐	☐	☐	
IM B6 [2)] 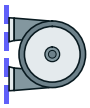	**T**	**–**	☐	☐	☐	☐	☐	☐	☐	
IM B7 [2)] 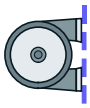	**U**	**–**	☐	☐	☐	☐	☐	☐	☐	
IM B8 [2)]	**V**	**–**	☐	☐	☐	☐	☐	☐	☐	
IM V6 [2)]	**D**	**–**	☐	☐	☐	☐	☐	☐	☐	
IM V5 without protective cover [2)]	**C**	**–**	☐	☐	☐	☐	☐	☐	☐	
IM V5 with protective cover [2) 3) 4)] 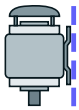	**C**	**H00**	✓	✓	✓	✓	✓	✓	✓	
With flange	**Acc. to EN 50347 Acc. to DIN 42948**		**FF165 A 200**	**FF165 A 200**	**FF215 A 250**	**FF265 A 300**	**FF300 A 350**	**FF300 A 350**	**FF350 A 400**	
IM B5 [2) 5)] 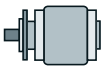	**F**	**–**	✓	✓	✓	✓	✓	✓	✓	
IM V1 without protective cover [2)]	**G**	**–**	✓	✓	✓	✓	✓	✓	✓	
IM V1 with protective cover [2) 4)]	**G**	**H00**	✓	✓	✓	✓	✓	✓	✓	
IM V3 [3)]	**H**	**–**	✓	✓	✓	✓	✓	✓	✓	
IM B35 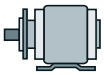	**J**	**–**	✓	✓	✓	✓	✓	✓	✓	

For legends and footnotes, see page 5/57.

© Innomotics 2024

Synchronous reluctance motors for SINAMICS converters – VSD4000 line

Aluminum series Innomotics GP 1FP1014

Types of construction	Article No. supplement: Type of construction code letter 14th position of the Article No.	Article No. supplement: For types of construction with order code(s) Article No. with additional identification code **-Z**	Frame size 80	90	112	132	160	180	200	Motor version
			1FP1014							Super Premium Efficiency
1FP1014- . . . . . - .	■ . . (-Z)	Order code								
With flange next largest	**Acc. to EN 50347**		**–**	**FF215**	**FF265**	**FF300**	**–**	**–**	**–**	
	Acc. to DIN 42948		**–**	**A 250**	**A 300**	**A 350**	**–**	**–**	**–**	
IM B5 [2) 5)] 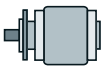	**F**	**P01**	–	✓	✓	✓	–	–	–	
IM V1 without protective cover [2)]	**G**	**P01**	–	✓	✓	✓	–	–	–	
IM V1 with protective cover [2) 4) 5) 6)]	**G**	**P01+H00**	–	✓	✓	✓	–	–	–	
IM V3 [4)]	**H**	**P01**	–	✓	✓	✓	–	–	–	
IM V18 with protective cover [2) 3) 4) 5)] 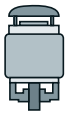	**M**	**H00**	–	✓	✓	✓	–	–	–	
With flange next smallest	**Acc. to EN 50347**		**FF130**	**–**	**FF165**	**FF215**	**FF265**	**FF265**	**FF300**	
	Acc. to DIN 42948		**A 160**	**–**	**A 200**	**A 250**	**A 300**	**A 300**	**A 350**	
IM B5 [2) 6)] 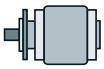	**F**	**P02**	✓	–	✓	✓	✓	✓	✓	
IM V1 without protective cover [2)]	**G**	**P02**	✓	–	✓	✓	✓	✓	✓	
IM V1 with protective cover [2) 4) 5) 6)]	**G**	**P02+H00**	✓	–	✓	✓	✓	✓	✓	
IM V3 [4)]	**H**	**P02**	✓	–	✓	✓	✓	✓	✓	
IM B35 [3)] 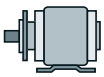	**J**	**P02**	✓	–	✓	✓	✓	✓	✓	

For legends and footnotes, see page 5/57.

© Innomotics 2024

Synchronous reluctance motors for SINAMICS converters – VSD4000 line

Aluminum series Innomotics GP 1FP1014

Types of construction	Article No. supplement: Type of construction code letter 14th position of the Article No.	Article No. supplement: For types of construction with order code(s) Article No. with additional identification code **-Z**	Frame size 80	90	112	132	160	180	200	Motor version
			1FP1014							Super Premium Efficiency
1FP1014- . . . . . - .	■ . . (-Z)	Order code								
With flange	**Acc. to EN 50347**		**FT100**	**FT115**	**FT130**	**FT165**	**FT215**	**–**	**–**	
	Acc. to DIN 42948		**C 120**	**C 140**	**C 160**	**C 200**	**C 250**	**–**	**–**	
IM B14 [2) 6)]	**K**	**–**	✓	✓	✓	✓	✓	–	–	
IM V19 [2)]	**L**	**–**	✓	✓	✓	✓	✓	–	–	
IM V18 without protective cover [2)]	**M**	**–**	✓	✓	✓	✓	✓	–	–	
IM V18 with protective cover [2) 4) 5) 6)] 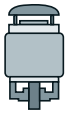	**M**	**H00**	✓	✓	✓	✓	✓	–	–	
IM B34 [3)]	**N**	**–**	✓	✓	✓	✓	✓	–	–	
With flange next largest	**Acc. to EN 50347**		**FT130**	**FT130**	**FT165**	**FT215**	**–**	**–**	**–**	
	Acc. to DIN 42948		**C 160**	**C 160**	**C 200**	**C 250**	**–**	**–**	**–**	
IM B14 [2) 6)]	**K**	**P01**	✓	✓	✓	✓	–	–	–	
IM V19 [2)]	**L**	**P01**	✓	✓	✓	✓	–	–	–	
IM V18 without protective cover [2)] 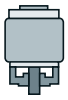	**M**	**P01**	✓	✓	✓	✓	–	–	–	
IM V18 with protective cover [2) 4) 5) 6)] 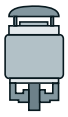	**M**	**P01+H00**	✓	✓	✓	✓	–	–	–	
IM B34 [3)]	**N**	**P01**	✓	✓	✓	✓	–	–	–	

5

For legends and footnotes, see page 5/57.

© Innomotics 2024

Synchronous reluctance motors for SINAMICS converters – VSD4000 line

Aluminum series Innomotics GP 1FP1014

Types of construction	Article No. supplement: Type of construction code letter 14th position of the Article No.	Article No. supplement: For types of construction with order code(s) Article No. with additional identification code **-Z**	Frame size 80	90	112	132	160	180	200	Motor version
			1FP1014							Super Premium Efficiency
1FP1014- . . . . . - .	■ **. . (-Z)**	Order code								
With flange next largest	**Acc. to EN 50347**		**–**	**–**	**FT165**	**FT215**	**FT265**	**–**	**–**	
	Acc. to DIN 42948		**–**	**–**	**C 200**	**C 250**	**C 300**	**–**	**–**	
IM B14 [2) 6)]	**K**	**P02**	–	–	✓	✓	✓	–	–	
IM V19 [2)]	**L**	**P02**	–	–	✓	✓	✓	–	–	
IM V18 without protective cover [2)]	**M**	**P02**	–	–	✓	✓	✓	–	–	
IM V18 with protective cover [2) 3) 4)] 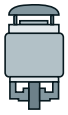	**M**	**P02+H00**	–	–	✓	✓	✓	–	–	
IM B34	**N**	**P02**	–	–	✓	✓	✓	–	–	

☐ Standard version
✓ With additional charge
O. R. Possible on request
– Not possible

5

1) The types of construction IM B6/7/8, IM V6, and IM V5 with/without protective cover are also possible as long as no condensation drainage holes (order code **H03**) and no stamping of these types of construction on the rating plate are required. As standard the type of construction IM B3 is then stamped on the rating plate. With type of construction IM V5 with protective cover, the protective cover has to be additionally ordered with order code **H00**. The protective cover is not stamped on the rating plate.

2) The type of construction is stamped on the rating plate. For orders with condensation drainage holes (order code **H03**), if mounted in a different position, the position must be specified to ensure that the condensation drainage holes are positioned correctly.

3) The "Second shaft extension" option (order code **L05**) is not possible.

4) In combination with an encoder, it is not necessary to order the protective cover (order code **H00**), as this is delivered as a protection for the encoder as standard. In this case the protective cover is standard version (without additional charge).

5) The types of construction IM V3 and IM V1 with/without protective cover are also possible as long as no condensation drainage holes (order code **H03**) and no stamping of these types of construction on the rating plate are required. As standard the type of construction IM B5 is then stamped on the rating plate. With type of construction IM V1 with protective cover, the protective cover has to be additionally ordered with order code **H00**. The protective cover is not stamped on the rating plate.

6) The types of construction IM V19 and IM V18 with/without protective cover are also possible as long as no condensation drainage holes (order code **H03**) and no stamping of these types of construction on the rating plate are required. As standard the type of construction IM B14 is then stamped on the rating plate. With type of construction IM V18 with protective cover, the protective cover has to be additionally ordered with order code **H00**. The protective cover is not stamped on the rating plate.

© Innomotics 2024

Synchronous reluctance motors for SINAMICS converters – VSD4000 line

Cast-iron series Innomotics SD 1FP1514

Selection and ordering data

Types of construction	Article No. supplement: Type of construction code letter 14th position of the Article No.	Article No. supplement: For types of construction with order code(s) Article No. with additional identification code -Z	Frame size 80	90	112	132	160	180	200	225	Motor version
			1FP1514								Super Premium Efficiency
1FP1514- . . . . . - .	■ . . (-Z)	Order code									
Without flange											
IM B3 [1) 2)]	A	–	☐	☐	☐	☐	☐	☐	☐	☐	
IM B6 [2)] 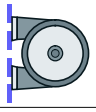	T	–	☐	☐	☐	☐	☐	☐	☐	☐	
IM B7 [2)] 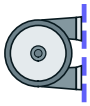	U	–	☐	☐	☐	☐	☐	☐	☐	☐	
IM B8 [2)]	V	–	☐	☐	☐	☐	☐	☐	☐	☐	
IM V6 [2)] 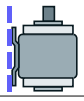	D	–	☐	☐	☐	☐	☐	☐	☐	☐	
IM V5 without protective cover [2)]	C	–	☐	☐	☐	☐	☐	☐	☐	☐	
IM V5 with protective cover [2) 3) 4)] 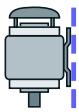	C	H00	✓	✓	✓	✓	✓	✓	✓	✓	
With flange	**Acc. to EN 50347**		**FF165**	**FF165**	**FF215**	**FF265**	**FF300**	**FF300**	**FF350**	**FF400**	
	Acc. to DIN 42948		**A 200**	**A 200**	**A 250**	**A 300**	**A 350**	**A 350**	**A 400**	**A 450**	
IM B5 [2) 5)] 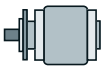	F	–	✓	✓	✓	✓	✓	✓	✓	✓	
IM V1 without protective cover [2)]	G	–	✓	✓	✓	✓	✓	✓	✓	✓	
IM V1 with protective cover [2) 3) 4)]	G	H00	✓	✓	✓	✓	✓	✓	✓	✓	
IM V3 [4)]	H	–	✓	✓	✓	✓	✓	✓	✓	✓	
IM B35 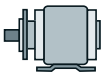	J	–	✓	✓	✓	✓	✓	✓	✓	✓	

For legends and footnotes, see page 5/60.

© Innomotics 2024

Synchronous reluctance motors for SINAMICS converters – VSD4000 line

Cast-iron series Innomotics SD 1FP1514

Types of construction	Article No. supplement: Type of construction code letter 14th position of the Article No.	For types of construction with order code(s) Article No. with additional identification code **-Z**	Frame size 80	90	112	132	160	180	200	225	Motor version
			1FP1514								Super Premium Efficiency
1FP1514- . . . . . - .	**■ . . (-Z)**	Order code									
With flange next largest	**Acc. to EN 50347**		**–**	**FF215**	**FF265**	**FF300**	**–**	**–**	**–**	**–**	
	Acc. to DIN 42948		**–**	**A 250**	**A 300**	**A 350**	**–**	**–**	**–**	**–**	
IM B5 [2) 6)] 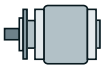	**F**	**P01**	–	✓	✓	✓	–	–	–	–	
IM V1 without protective cover [2)]	**G**	**P01**	–	✓	✓	✓	–	–	–	–	
IM V1 with protective cover [2) 4) 5)]	**G**	**P01+H00**	–	✓	✓	✓	–	–	–	–	
IM V3 [3)]	**H**	**P01**	–	✓	✓	✓	–	–	–	–	
IM B35 [3)] 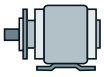	**J**	**P01**	–	✓	✓	✓	–	–	–	–	
With flange next smallest	**Acc. to EN 50347**		**FF130**	**–**	**FF165**	**FF215**	**FF265**	**FF265**	**FF300**	**–**	
	Acc. to DIN 42948		**A 160**	**–**	**A 200**	**A 250**	**A 300**	**A 300**	**A 350**	**–**	
IM B5 [2) 6)] 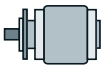	**F**	**P02**	✓	–	✓	✓	✓	✓	✓	–	
IM V1 without protective cover [2)] 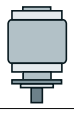	**G**	**P02**	✓	–	✓	✓	✓	✓	✓	–	
IM V1 with protective cover [2) 4) 5)]	**G**	**P02+H00**	✓	–	✓	✓	✓	✓	✓	–	
IM V3 [4)]	**H**	**P02**	✓	–	✓	✓	✓	✓	✓	–	
IM B35 [3)] 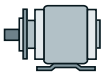	**J**	**P02**	✓	–	✓	✓	✓	✓	✓	–	

For legends and footnotes, see page 5/60.

© Innomotics 2024

Synchronous reluctance motors for SINAMICS converters – VSD4000 line

Cast-iron series Innomotics SD 1FP1514

Types of construction	Article No. supplement: Type of construction code letter 14th position of the Article No.	Article No. supplement: For types of construction with order code(s) Article No. with additional identification code **-Z**	Frame size 80	90	112	132	160	180	200	225	Motor version
1FP1514-.....-.	**■..(-Z)**	Order code	**1FP1514**								Super Premium Efficiency
With flange	**Acc. to EN 50347**		**FT100**		**FT130**	**FT165**	**FT215**	**–**	**–**		
	Acc. to DIN 42948		**C 120**		**C 160**	**C 200**	**C 250**	**–**	**–**		
IM B14 [2) 6)]	**K**	**–**	–	–	✓	✓	✓	–	–	–	
IM V19 [2)] 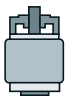	**L**	**–**	–	–	✓	✓	✓	–	–	–	
IM V18 without protective cover [2)] 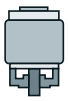	**M**	**–**	–	–	✓	✓	✓	–	–	–	
IM V18 with protective cover [2) 3) 4)] 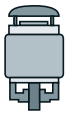	**M**	**H00**	–	–	✓	✓	✓	–	–	–	
IM B34	**N**	**–**	✓	✓	✓	✓	✓	–	–	–	
With flange next largest	**Acc. to EN 50347**		**FT130**	**FT130**	**FT165**	**FT215**	**–**	**–**	**–**		
	Acc. to DIN 42948		**C 160**	**C 160**	**C 200**	**C 250**	**–**	**–**	**–**		
IM B14 [2) 6)]	**K**	**P01**	✓	✓	✓	✓	–	–	–	–	
IM V19 [2)] 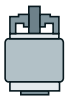	**L**	**P01**	✓	✓	✓	✓	–	–	–	–	
IM V18 without protective cover [2)] 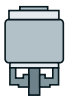	**M**	**P01**	✓	✓	✓	✓	–	–	–	–	
IM V18 with protective cover [2) 3) 4)] 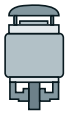	**M**	**P01+H00**	✓	✓	✓	✓	–	–	–	–	
IM B34	**N**	**P01**	✓	✓	✓	✓	–	–	–	–	

5

☐ Standard version
✓ With additional charge
O. R. Possible on request
– Not possible

1) The types of construction IM B6/7/8, IM V6 and IM V5 with/without protective cover are also possible as long as no stamping of these types of construction on the rating plate is required. As standard the type of construction IM B3 is then stamped on the rating plate. With type of construction IM V5 with protective cover, the protective cover has to be additionally ordered with order code **H00**. The protective cover is not stamped on the rating plate.

2) The type of construction is stamped on the rating plate. If mounted in a different position, the position must be specified to ensure that the condensation drainage holes are positioned correctly.

3) In combination with an encoder, it is not necessary to order the protective cover (order code **H00**), as this is delivered as a protection for the encoder as standard. In this case the protective cover is standard design (without additional charge).

4) The "Second shaft extension" option (order code **L05**) is not possible.

5) The types of construction IM V3 and IM V1 with/without protective cover are also possible as long as no stamping of these types of construction on the rating plate is required. As standard the type of construction IM B5 is then stamped on the rating plate. With type of construction IM V1 with protective cover, the protective cover has to be additionally ordered with order code **H00**. The protective cover is not stamped on the rating plate.

6) The types of construction IM V19 and IM V18 with/without protective cover are also possible as long as no stamping of these types of construction on the rating plate is required. As standard the type of construction IM B14 is then stamped on the rating plate. With type of construction IM V18 with protective cover, the protective cover has to be additionally ordered with order code **H00**. The protective cover is not stamped on the rating plate.

© Innomotics 2024

Synchronous reluctance motors for SINAMICS converters – VSD4000 line

Selection and ordering data

Motor protection	Article No. supplement		Frame size							Motor version
	Motor protection code letter 15th position of the Article No.	Additional identification code with order code and plain text if required	80	90	112	132	160	180	200	
			1FP1014							Super Premium Efficiency
1FP1014-.....-.. ■ .		Order code								
Motor protection										
1 or 3 PTC thermistors – for tripping (2 terminals) [1]	**B**	**–**	✓	✓	✓	✓	✓	✓	✓	
2 or 6 PTC thermistors – for alarm and tripping (4 terminals) [1]	**C**	**–**	✓	✓	✓	✓	✓	✓	✓	
3 Pt100 resistance thermometers (6 terminals) [1]	**H**	**–**	–	–	✓	✓	✓	✓	✓	
1 Pt1000 resistance thermometer (2 terminals) [2]	**K**	**–**	☐	☐	☐	☐	☐	☐	☐	
2 Pt1000 resistance thermometers (4 terminals) [2]	**L**	**–**	✓	✓	✓	✓	✓	✓	✓	
1 Pt100 resistance thermometer (2 terminals)	**P**	**–**	–	–	✓	✓	✓	✓	✓	
3 Pt100 resistance thermometers (9 terminals)	**Q**	**–**	–	–	✓	✓	✓	✓	✓	
6 Pt100 resistance thermometers (18 terminals) [1]	**R**	**–**	–	–	✓	✓	✓	✓	✓	
3 bimetal sensors (NC contacts) for tripping (2 terminals) [1]	**Z**	**Q3A**	✓	✓	✓	✓	✓	✓	✓	

○ Without additional charge
✓ With additional charge
– Not possible

5

[1] Evaluation with associated tripping unit (see Catalog IC 10) is recommended.

[2] Not UL-certified. Not in combination with option **D39**.

© Innomotics 2024

Synchronous reluctance motors for SINAMICS converters – VSD4000 line

Cast-iron series Innomotics SD 1FP1514

Selection and ordering data

Motor protection	Article No. supplement		Frame size								Motor version
	Motor protection code letter 15th position of the Article No.	Additional identification code with order code and plain text if required	80	90	112	132	160	180	200	225	
			1FP1514								Super Premium Efficiency
1FP1514-.....-.. ■ .		Order code									
Motor protection											
1 or 3 PTC thermistors – for tripping (2 terminals) [1]	**B**	**–**	✓	✓	✓	✓	✓	✓	✓	✓	
2 or 6 PTC thermistors – for alarm and tripping (4 terminals) [1]	**C**	**–**	✓	✓	✓	✓	✓	✓	✓	✓	
3 Pt100 resistance thermometers (6 terminals) [1]	**H**	**–**	✓	✓	✓	✓	✓	✓	✓	✓	
1 Pt1000 resistance thermometer (2 terminals) [2]	**K**	**–**	☐	☐	☐	☐	☐	☐	☐	☐	
2 Pt1000 resistance thermometers (4 terminals) [2]	**L**	**–**	–	–	✓	✓	✓	✓	✓	✓	
1 Pt100 resistance thermometer (2 terminals)	**P**	**–**	–	–	✓	✓	✓	✓	✓	✓	
3 Pt100 resistance thermometers (9 terminals)	**Q**	**–**	–	–	✓	✓	✓	✓	✓	✓	
6 Pt100 resistance thermometers (18 terminals)	**R**	**–**	–	–	✓	✓	✓	✓	✓	✓	
3 NTC thermistors – for tripping (6 terminals) [2]	**Z**	**Q2A**	✓	✓	✓	✓	✓	–	–	–	
3 bimetal sensors (NC contacts) for tripping (2 terminals) [1]	**Z**	**Q3A**	✓	✓	✓	✓	✓	✓	✓	✓	
6 × bimetal sensors (NC contacts) for alarm and tripping (4 terminals) [1]	**Z**	**Q9A**	–	–	✓	✓	✓	✓	✓	✓	

○ Without additional charge
✓ With additional charge
– Not possible

5

[1] Evaluation with associated tripping unit (see Catalog IC 10) is recommended.

[2] Not UL-certified. Not in combination with option **D39**.

© Innomotics 2024

Synchronous reluctance motors for SINAMICS converters – VSD4000 line

Selection and ordering data

Terminal box position	Article No. supplement		Frame size							Motor version
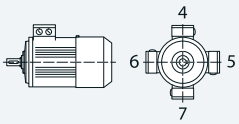	Terminal box position code 16th position of the Article No.	Additional identification code with order code and plain text if required	**80**	**90**	**112**	**132**	**160**	**180**	**200**	
			1FP1014							Super Premium Efficiency
1FP1014-.....-... ■		Order code								
Terminal box position										
Terminal box top [1]	**4**	–	☐	☐	☐	☐	☐	☐	☐	
Terminal box right-hand side [2]	**5**	–	✓	✓	✓	✓	✓	✓	✓	
Terminal box left-hand side [2]	**6**	–	✓	✓	✓	✓	✓	✓	✓	
Terminal box bottom [2]	**7**	–	–	–	✓	✓	–	–	–	

☐ Standard version
✓ With additional charge

5

[1] For types of construction with feet, cast feet are standard. Screwed-on feet are available with order code **H01**.

[2] For types of construction with feet, screwed-on feet are standard.

© Innomotics 2024

Synchronous reluctance motors for SINAMICS converters – VSD4000 line

Cast-iron series Innomotics SD 1FP1514

Selection and ordering data

Terminal box position	Article No. supplement		Frame size								Motor version
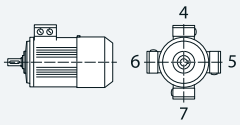	Terminal box position code 16th position of the Article No.	Additional identification code with order code and plain text if required	**80**	**90**	**112**	**132**	**160**	**180**	**200**	**225**	
			1FP1514								Super Premium Efficiency
1FP1514-.....-... ■		Order code									
Terminal box position											
Terminal box top [1]	**4**	**–**	☐	☐	☐	☐	☐	☐	☐	☐	
Terminal box right-hand side [2]	**5**	**–**	✓	✓	✓	✓	✓	✓	✓	✓	
Terminal box left-hand side [2]	**6**	**–**	✓	✓	✓	✓	✓	✓	✓	✓	
Terminal box bottom [2]	**7**	**–**	–	–	✓	✓	✓	–	–	–	

☐ Standard version
✓ With additional charge

5

[1] For types of construction with feet, cast feet are standard. Screwed-on feet are available with order code **H01**.

[2] For types of construction with feet, screwed-on feet are standard.

© Innomotics 2024

Selection and ordering data

Special versions	Additional identification code -Z with order code and plain text if required	Frame size 80	90	112	132	160	180	200	Motor version
		1FP1014							Super Premium Efficiency
1FP1014-.....-.....-Z	Order code								
Motor protection									
1 or 3 PTC thermistors – for tripping (2 terminals)	**Q11**	✓	✓	✓	✓	✓	✓	✓	
2 or 6 PTC thermistors – for alarm and tripping (4 terminals)	**Q12**	✓	✓	✓	✓	✓	✓	✓	
3 bimetal sensors (NC contacts) for tripping (2 terminals)	**Q31**	✓	✓	✓	✓	✓	✓	✓	
6 bimetal sensors (NC contacts) for alarm and tripping (4 terminals)	**Q32**	✓	✓	✓	✓	✓	✓	✓	
3 bimetal sensors (NC contacts) for tripping (6 terminals)	**Q33**	–	–	–	–	–	O	O	
6 bimetal sensors (NC contacts) for alarm and tripping (12 terminals)	**Q34**	–	–	–	–	–	✓	✓	
1 Pt1000 resistance thermometer (2 terminals)	**Q35**	✓	✓	✓	✓	✓	O	O	
2 Pt1000 resistance thermometers (4 terminals)	**Q36**	O	✓	O	O	O	O	O	
3 Pt100 resistance thermometers (6 terminals)	**Q60**	–	–	✓	O	O	O	O	
6 Pt100 resistance thermometers (12 terminals)	**Q61**	–	–	✓	✓	✓	✓	✓	
1 Pt100 resistance thermometer (2 terminals)	**Q62**	–	–	✓	✓	✓	✓	✓	
3 Pt100 resistance thermometers (9 terminals)	**Q63**	–	–	✓	✓	✓	✓	✓	
6 Pt100 resistance thermometers (18 terminals)	**Q64**	–	–	✓	✓	✓	✓	–	
2 Pt100 resistance thermometers basic configuration for bearings (4 terminals)	**Q72**	–	–	O. R.	O. R.	O. R.	✓	✓	
2 Pt100 resistance thermometers for bearings (6 terminals)	**Q78**	–	–	O. R.	O. R.	O. R.	✓	✓	
2 Pt100 double resistance thermometers for bearings (12 terminals)	**Q79**	–	–	O. R.	O. R.	O. R.	✓	✓	
Motor connection and terminal box									
External grounding	**H04**	✓	✓	✓	✓	✓	✓	✓	
Terminal box on NDE	**H08**	✓	✓	✓	✓	✓	✓	✓	
Connected in star for dispatch	**M01**	–	–	✓	✓	✓	✓	✓	
Connected in delta for dispatch	**M02**	–	–	✓	✓	✓	✓	✓	
Rotation of the terminal box through 90°, entry from DE	**R10**	O	O	O	O	O	✓	✓	
Rotation of the terminal box through 90°, entry from NDE	**R11**	O	O	O	O	O	✓	✓	
Rotation of the terminal box through 180°	**R12**	O	O	O	O	O	✓	✓	
Terminal box in position 0°; connection from right	**R13**	O	O	O	O	–	–	–	
One metal cable gland	**R15**	✓	✓	✓	✓	✓	✓	✓	
Metal cable gland, maximum configuration	**R18**	✓	✓	✓	✓	✓	✓	✓	
3 cables protruding, 0.5 m long	**R20**	✓	✓	✓	✓	✓	–	–	
3 cables protruding, 1.5 m long	**R21**	✓	✓	✓	✓	✓	O. R.	O. R.	
6 cables protruding, 0.5 m long	**R22**	✓	✓	✓	✓	✓	O. R.	O. R.	
6 cables protruding, 1.5 m long	**R23**	✓	✓	✓	✓	✓	O. R.	O. R.	
6 cables protruding, 3 m long	**R24**	✓	✓	✓	✓	✓	O. R.	O. R.	
Larger terminal box	**R50**	✓	✓	✓	✓	✓	✓	✓	
Motor connector Han-Drive 10e for 230 VΔ/400 VY	**R70**	✓	✓	✓	✓	–	–	–	
Motor connector EMC Han-Drive 10e for 230 VΔ/400 VY	**R71**	✓	✓	✓	✓	–	–	–	
Version with reduced silicon amount according to VDMA 24364-C1/T70	**R77**	✓	✓	✓	✓	✓	✓	✓	

For legends, see page 5/68.

© Innomotics 2024

Synchronous reluctance motors for SINAMICS converters – VSD4000 line

Aluminum series Innomotics GP 1FP1014

Special versions	Additional identification code **-Z** with order code and plain text if required	Frame size							Motor version
		80	**90**	**112**	**132**	**160**	**180**	**200**	
		1FP1014							Super Premium Efficiency
1FP1014-.....-....-Z	Order code								
Windings and insulation									
Temperature class 180 (H) at rated power and max. CT 60 °C	**N11**	✓	✓	✓	✓	✓	✓	✓	
Increased air humidity/temperature with 30 to 60 g water per m³ of air	**N30**	✓	✓	✓	✓	✓	✓	✓	
Increased air humidity/temperature with 60 to 100 g water per m³ of air	**N31**	✓	✓	✓	✓	✓	✓	✓	
Colors and paint finish									
Standard paint finish C2 in RAL 7030 stone gray		☐	☐	☐	☐	☐	☐	☐	
Unpainted (only cast-iron parts primed)	**S00**	○	○	○	○	○	○	○	
Unpainted, only primed	**S01**	✓	✓	✓	✓	✓	✓	✓	
Special paint finish C3	**S02**	✓	✓	✓	✓	✓	✓	✓	
Special paint finish sea air resistant C4	**S03**	✓	✓	✓	✓	✓	✓	✓	
Internal coating	**S05**	✓	✓	✓	✓	✓	✓	✓	
Paint finish in other standard RAL colors: RAL 1RAL 1015, 3000, 5002, 5009, 5010, 5012, 5015, 6011, 7001, 7011, 7016, 7031, 7032, 7035, 7037, 8012, 9005, 9010 (see Catalog Section 1 "Introduction")	**Y53 •** and paint finish RAL....	✓	✓	✓	✓	✓	✓	✓	
Paint finish in special RAL colors: For RAL colors, see "Special paint finish in special RAL colors" (see Catalog Section 1 "Introduction")	**Y56 •** and paint finish RAL....	✓	✓	✓	✓	✓	✓	✓	
Non-standard colors Colors see "Paint finish in non-standard colors (see Catalog Section 1 "Introduction")	**Y66 •** and paint finish	✓	✓	✓	✓	✓	✓	✓	
Modular technology – Basic versions									
Mounting of holding brake (standard assignment)	**F01**	✓	✓	✓	✓	✓	✓	✓	
Mounting of PRECIMA brake	**F04**	–	–	✓	✓	✓	✓	✓	
Mounting of Kübler Sendix 5020 HTL, 1024 I rotary pulse encoder	**G11**	✓	✓	✓	✓	✓	✓	✓	
Mounting of Kübler Sendix 5020 TTL, 1024 I rotary pulse encoder	**G12**	✓	✓	✓	✓	✓	✓	✓	
Modular technology – Additional versions									
Brake supply voltage 24 V DC	**F10**	✓	✓	✓	✓	✓	✓	✓	
Brake supply voltage 230 V AC, 50/60 Hz	**F11**	✓	✓	○	○	○	○	○	
Brake supply voltage 400 V AC, 50/60 Hz	**F12**	✓	✓	✓	✓	✓	✓	✓	
Brake supply voltage 180 V DC	**F17**	✓	✓	✓	✓	✓	✓	✓	
Brake supply voltage 205 V DC	**F18**	✓	✓	✓	✓	✓	✓	✓	
Mechanical manual brake release with lever (no locking)	**F50**	✓	✓	✓	✓	✓	✓	✓	
Special technology									
Mounting of rotary pulse encoder HOG 86E	**G03**	–	–	✓	✓	✓	✓	✓	
Mounting of LL 861 900 220 rotary pulse encoder	**G04**	–	–	✓	✓	✓	✓	✓	
Mounting of HOG 9 DN 1024 I rotary pulse encoder	**G05**	–	–	✓	✓	✓	✓	✓	
Mounting of HOG 10 D 1024 I rotary pulse encoder	**G06**	–	–	✓	✓	✓	✓	✓	
Mounting of Kübler Sendix 5834FS2 1024, SIL-2 rotary pulse encoder	**G21**	–	–	–	–	–	✓	✓	
Mounting of Kübler Sendix 5834FS3 1024, SIL-3 rotary pulse encoder	**G22**	–	–	–	–	–	✓	✓	
Mounting of HOGS100S-B76.626.01024.1 rotary pulse encoder	**G25**	–	–	–	–	–	✓	✓	
Mounting of LL FSI 862-184560-1024, SIL-2 rotary pulse encoder	**G27**	–	–	–	–	–	✓	✓	
Mechanical version and degrees of protection									
Prepared for mountings, centering hole only	**G40**	✓	✓	✓	✓	✓	☐	☐	
Prepared for mountings with D12 shaft	**G41**	✓	✓	✓	✓	✓	✓	✓	
Prepared for mountings with D16 shaft	**G42**	O. R.	O. R.	✓	✓	✓	✓	✓	
Mechanical protection for encoder	**G43**	✓	✓	✓	✓	✓	✓	✓	

For legends, see page 5/68.

© Innomotics 2024

Synchronous reluctance motors for SINAMICS converters – VSD4000 line

Aluminum series Innomotics GP 1FP1014

Special versions	Additional identification code **-Z** with order code and plain text if required	Frame size							Motor version
		80	**90**	**112**	**132**	**160**	**180**	**200**	
		1FP1014							Super Premium Efficiency
1FP1014-.....-....-Z	Order code								
Mechanical design and degrees of protection (continued)									
Protective cover	**H00**	✓	✓	✓	✓	✓	✓	✓	
Screwed-on (instead of cast) feet	**H01**	✓	✓	✓	✓	✓	☐	☐	
Vibration-proof version; vibration resistance to Class 3M4 according to IEC 60721-3-3:1994	**H02**	✓	✓	✓	✓	✓	✓	✓	
Condensation drainage holes	**H03**	✓	✓	✓	✓	✓	✓	✓	
Rust-resistant screws (externally)	**H07**	✓	✓	✓	✓	✓	✓	✓	
Housing with screw mounting	**H10**	✓	✓	–	–	–	✓	✓	
IP66 degree of protection	**H19**	✓	✓	✓	✓	✓	✓	✓	
IP65 degree of protection	**H20**	✓	✓	✓	✓	✓	✓	✓	
IP56 degree of protection	**H22**	✓	✓	✓	✓	✓	✓	✓	
Drive-end seal for flange-mounted motors, oil-tight to 0.1 bar	**H23**	✓	✓	✓	✓	✓	✓	✓	
Coolant temperature and installation altitude									
Coolant temperature –40 to +40 °C	**D03**	✓	✓	✓	✓	✓	✓	✓	
Coolant temperature –30 to +40 °C	**D04**	✓	✓	✓	✓	✓	✓	✓	
Versions in accordance with standards and specifications									
Version according to UL and CSA (Canadian regulation)	**D39**	✓	✓	✓	✓	✓	✓	✓	
TR CU product safety certificate EAC for Eurasian Customs Union	**D47**	✓	✓	✓	✓	✓	✓	✓	
UKCA-marking		☐	☐	☐	☐	☐	☐	☐	
Bearings and lubrication									
Located bearing DE	**L20**	✓	✓	✓	✓	✓	✓	✓	
Located bearing NDE	**L21**	✓	✓	✓	✓	☐	☐	☐	
Bearing design for increased cantilever forces	**L22**	✓	✓	✓	✓	✓	✓	✓	
Regreasing device	**L23**	–	–	✓	✓	✓	✓	✓	
Bearings reinforced at both ends for DE and NDE, bearing size 63	**L25**	✓	✓	✓	✓	✓	✓	✓	
Bearing fohigh r axial tension forces	**L34**	✓	✓	✓	✓	✓	✓	✓	
Bearing insulation NDE	**L51**	–	–	✓	✓	✓	✓	✓	
Measuring nipple for SPM shock pulse measurement for bearing inspection	**Q01**	–	–	✓	✓	✓	✓	✓	
Motor design VSD, higher speed up to .... rpm, vibration level .. acc. IEC60034-14, with or w/o routine test	**Y37**	O. R.	O. R.	O. R.	O. R.	O. R.	O. R.	O. R.	
Balance and vibration severity									
Half-key balancing (standard)		☐	☐	☐	☐	☐	☐	☐	
Balancing without feather key	**L01**	✓	✓	✓	✓	✓	✓	✓	
Full-key balancing	**L02**	✓	✓	✓	✓	✓	✓	✓	
Shaft and rotor									
Shaft extension with standard dimensions, without feather keyway	**L04**	✓	✓	✓	✓	✓	✓	✓	
Standard, cylindrical shaft extension (second shaft extension) NDE acc. to EN 50347	**L05**	✓	✓	✓	✓	✓	✓	✓	
Standard shaft made of stainless steel (e.g. 1.4021)	**L06**	✓	✓	–	✓	✓	✓	✓	
Shaft extension run-out in accordance with IEC 60072-1 precision class	**L07**	✓	✓	✓	✓	✓	✓	✓	
Shaft extension run-out, concentricity and perpendicularity in accordance with IEC 60072-1 precision class for flange-mounted motors	**L08**	✓	✓	✓	✓	✓	✓	✓	
Non-standard cylindrical shaft extension, DE	**Y58** • and customer specifications	✓	✓	✓	✓	✓	✓	✓	
Non-standard cylindrical shaft extension, NDE	**Y59** • and customer specifications	✓	✓	✓	✓	✓	✓	✓	
Heating and ventilation									
Mounted separately driven fan	**F70**	✓	✓	✓	✓	✓	✓	✓	
Sheet metal fan cover	**F74**	✓	✓	✓	✓	✓	✓	✓	
Fan cover for textile industry	**F75**	✓	✓	✓	✓	✓	✓	✓	
Metal external fan	**F76**	✓	✓	✓	✓	✓	✓	✓	

For legends, see page 5/68.

© Innomotics 2024

Synchronous reluctance motors for SINAMICS converters – VSD4000 line

Aluminum series Innomotics GP 1FP1014

Special versions	Additional identification code **-Z** with order code and plain text if required	Frame size							Motor version
		80	**90**	**112**	**132**	**160**	**180**	**200**	
		1FP1014							Super Premium Efficiency
1FP1014-.....-....-Z	Order code								
Heating and ventilation (continued)									
Without external fan and without fan cover	**F90**	✓	✓	✓	✓	✓	✓	✓	
Anti-condensation heating for 230 V (2 terminals)	**Q02**	✓	✓	✓	✓	✓	✓	✓	
Anti-condensation heating for 115 V (2 terminals)	**Q03**	✓	✓	✓	✓	✓	✓	✓	
Rating plate and additional rating plates									
Second rating plate, loose	**M10**	✓	✓	✓	✓	✓	✓	✓	
Rating plate, stainless steel	**M11**	✓	✓	✓	✓	✓	✓	✓	
Additional rating plate with customer specifications	**Y82** • and customer specifications	✓	✓	✓	✓	✓	✓	✓	
Additional information on rating plate and on package label (max. 20 characters)	**Y84** • and customer specifications	✓	✓	✓	✓	✓	✓	✓	
Adhesive label, supplied loose (printed with: Article No., Serial No.; 2 lines of text)	**Y85** • and customer specifications	–	–	✓	✓	✓	✓	✓	
Extension of the liability for defects									
Extension of the liability for defects by 24 months to a total of 36 months (3 years) from delivery		☐	☐	☐	☐	☐	☐	☐	
Packaging, safety notes, documentation and test certificates									
A printed version of the safety notes in German/English and safety notes in the language of the country of use is supplied in each wire-lattice pallet	**B01**	○	○	○	○	○	○	○	
Inspection certificate 3.1 according to EN 10204	**B02**	✓	✓	✓	✓	✓	✓	✓	
Document - Electrical datasheet	**B60**	✓	✓	✓	✓	✓	✓	✓	
Document - Order dimensional drawing	**B61**	✓	✓	✓	✓	✓	✓	✓	
Type test with heat run for horizontal motors, with acceptance	**B83**	✓	✓	✓	✓	✓	✓	✓	
"Basic" documentation package	**B90**	✓	✓	✓	✓	✓	✓	✓	
"Advanced" documentation package	**B91**	✓	✓	✓	✓	✓	✓	✓	
"Projects" documentation package	**B92**	✓	✓	✓	✓	✓	✓	✓	
Wire-lattice pallet packaging	**B99**	○	○	○	○	○	○	○	

☐ Standard version
○ Without additional charge
✓ With additional charge
O. R. Possible on request
– Not possible
• This order code only determines the price of the version – Additional plain text is required.

Note:
The catalog provides an overview of the available motor options but doesn't detail the correct logic combinations.
For a customized selection tailored to your specific requirements, please use the SPC at the following address:
configurator.innomotics.com

© Innomotics 2024

Selection and ordering data

Special versions	Additional identification code -Z with order code and plain text if required	Frame size								Motor version
		80	90	112	132	160	180	200	225	
		1FP15.4								Super Premium Efficiency
1FP15.4- . . . . . - . . . . -Z	Order code									
Motor protection										
1 or 3 PTC thermistors – for tripping (2 terminals)	**Q11**	–	–	✓	✓	✓	✓	✓	✓	
2 or 6 PTC thermistors – for alarm and tripping (4 terminals)	**Q12**	–	–	✓	O	O	O	O	✓	
3 bimetal sensors (NC contacts) for tripping (2 terminals)	**Q31**	–	–	✓	O	O	O	O	✓	
6 bimetal sensors (NC contacts) for alarm and tripping (4 terminals)	**Q32**	–	–	–	✓	✓	✓	✓	✓	
3 bimetal sensors (NC contacts) for tripping (6 terminals)	**Q33**	–	–	✓	O	O	O	O	✓	
6 bimetal sensors (NC contacts) thermostat for alarm and tripping (12 terminals)	**Q34**	–	–	✓	✓	✓	✓	✓	✓	
1 Pt1000 resistance thermometer (2 terminals)	**Q35**	O	O	O	O	O	O	O	✓	
2 Pt1000 resistance thermometers (4 terminals)	**Q36**	O	O	O	O	O	O	O	✓	
3 Pt100 resistance thermometers (6 terminals)	**Q60**	–	–	✓	✓	✓	✓	✓	✓	
1 Pt100 resistance thermometer (2 terminals)	**Q62**	–	–	✓	✓	✓	✓	✓	✓	
3 Pt100 resistance thermometers (9 terminals)	**Q63**	–	–	✓	✓	✓	✓	✓	✓	
6 Pt100 resistance thermometers (18 terminals)	**Q64**	–	–	✓	✓	✓	✓	✓	✓	
2 Pt100 resistance thermometers in basic configuration for bearings (4 terminals)	**Q72**	–	–	–	–	–	✓	✓	✓	
2 Pt100 resistance thermometers for bearings (6 terminals)	**Q78**	–	–	–	–	–	✓	✓	✓	
2 Pt100 double resistance thermometers for bearings (12 terminals)	**Q79**	–	–	–	–	–	✓	✓	✓	
Motor connection and terminal box										
External grounding	**H04**	✓	✓	✓	✓	✓	□	□	□	
Terminal box on NDE	**H08**	✓	✓	✓	✓	✓	✓	✓	✓	
Second external grounding	**H70**	–	–	O	O	O	✓	✓	✓	
Connected in star for dispatch	**M01**	✓	✓	✓	✓	✓	✓	✓	✓	
Connected in delta for dispatch	**M02**	✓	✓	✓	✓	✓	✓	✓	✓	
Rotation of the terminal box through 90°, entry from DE	**R10**	O	O	O	O	O	✓	✓	✓	
Rotation of the terminal box through 90°, entry from NDE	**R11**	O	O	O	O	O	✓	✓	✓	
Rotation of the terminal box through 180°	**R12**	O	O	O	O	O	✓	✓	✓	
One EMC cable gland	**R14**	✓	✓	✓	✓	✓	✓	✓	✓	
One metal cable gland	**R15**	✓	✓	✓	✓	✓	✓	✓	✓	
EMC cable gland, maximum configuration	**R16**	✓	✓	✓	✓	✓	✓	✓	✓	
Larger terminal box	**R50**	✓	✓	✓	✓	✓	✓	✓	✓	
Terminal box without cable entry opening	**R51**	–	–	O	O	O	O	O	O	
Drilled removable entry plate	**R52**	–	–	–	–	–	✓	✓	✓	
Undrilled removable entry plate	**R53**	–	–	–	–	–	✓	✓	✓	
Cast-iron auxiliary terminal box (small)	**R62**	–	–	✓	✓	✓	✓	✓	✓	
2 small cast-iron auxiliary terminal boxes	**R67**	–	–	✓	✓	✓	✓	✓	✓	
Silicone-free version		–	–	□	□	□	□	□	□	
Version with reduced silicon amount according to VDMA 24364-C1/T70	**R77**	✓	✓	✓	✓	✓	✓	✓	✓	
Non-standard threaded through hole (metric, NPT or G thread)	**Y61** • and customer specifications	–	–	✓	✓	✓	✓	✓	✓	
Windings and insulation										
Temperature class 180 (H) at rated power and max. CT 60 °C	**N11**	✓	✓	✓	✓	✓	✓	✓	✓	
Increased air humidity/temperature with 30 to 60 g water per m^3 of air	**N30**	✓	✓	✓	✓	✓	✓	✓	✓	
Increased air humidity/temperature with 60 to 100 g water per m^3 of air	**N31**	✓	✓	✓	✓	✓	✓	✓	✓	

For legends, see page 5/72.

© Innomotics 2024

Synchronous reluctance motors for SINAMICS converters – VSD4000 line

Cast-iron series Innomotics SD 1FP1514

Special versions	Additional identification code **-Z** with order code and plain text if required	Frame size 80	90	112	132	160	180	200	225	Motor version
		1FP15.4								Super Premium Efficiency
1FP15.4- . . . . . - . . . . -Z	Order code									
Colors and paint finish										
Standard paint finish C2 in RAL 7030 stone gray		□	□	□	□	□	□	□	□	
Unpainted (only cast-iron parts primed)	**S00**	○	○	○	○	○	○	○	○	
Unpainted, only primed	**S01**	✓	✓	✓	✓	✓	✓	✓	✓	
Special paint finish C3	**S02**	✓	✓	✓	✓	✓	✓	✓	✓	
Special paint finish sea air resistant C4	**S03**	✓	✓	✓	✓	✓	✓	✓	✓	
Special paint finish for use offshore C5	**S04**	✓	✓	✓	✓	✓	✓	✓	✓	
Internal coating	**S05**	–	–	✓	✓	✓	✓	✓	✓	
Special paint finish C5mid with medium durability	**S08**	✓	✓	✓	✓	✓	✓	✓	✓	
Special paint finish CX for offshore with high durability	**S09**	–	–	✓	✓	✓	✓	✓	✓	
Paint finish in other standard RAL colors: RAL 1RAL 1015, 3000, 5002, 5009, 5010, 5012, 5015, 6011, 7001, 7011, 7016, 7031, 7032, 7035, 7037, 8012, 9005, 9010 (see Catalog Section 1 "Introduction")	**Y53** • and paint finish RAL....	✓	✓	✓	–	✓	✓	✓	✓	
Paint finish in special RAL colors: For RAL colors, see "Special paint finish in special RAL colors" (see Catalog Section 1 "Introduction")	**Y56** • and paint finish RAL....	✓	✓	✓	✓	✓	✓	✓	✓	
Non-standard colors Colors see "Paint finish in non-standard colors (see Catalog Section 1 "Introduction")	**Y66** • and paint finish	✓	✓	✓	✓	✓	✓	✓	✓	
Modular technology – Basic versions										
Mounting of holding brake (standard assignment)	**F01**	–	–	✓	✓	✓	✓	✓	✓	
Mounting of Kübler Sendix 5020 HTL, 1024 I rotary pulse encoder	**G11**	✓	✓	✓	✓	✓	✓	✓	✓	
Mounting of Kübler Sendix 5020 TTL, 1024 I rotary pulse encoder	**G12**	✓	✓	✓	✓	✓	✓	✓	✓	
Modular technology – Additional versions										
Brake supply voltage 24 V DC	**F10**	–	–	✓	✓	✓	✓	✓	✓	
Brake supply voltage 230 V AC, 50/60 Hz	**F11**	–	–	○	○	○	○	○	○	
Brake supply voltage 400 V AC, 50/60 Hz	**F12**	–	–	✓	✓	✓	✓	✓	✓	
Brake supply voltage 180 V DC	**F17**	–	–	✓	✓	✓	✓	✓	✓	Only for: Combination with F01
Brake supply voltage 205 V DC	**F18**	–	–	✓	✓	✓	✓	✓	✓	Only for: Combination with F01
Backstop, counterclockwise motion blocked, clockwise direction of rotation	**F40**	–	–	–	✓	✓	✓	✓	✓	
Backstop, clockwise motion blocked, counterclockwise direction of rotation	**F41**	–	–	–	✓	✓	✓	✓	✓	
Mechanical manual brake release with lever (no locking)	**F50**	–	–	✓	✓	✓	✓	✓	✓	
Special technology										
Mounting of rotary pulse encoder HOG 86E	**G03**	–	–	✓	✓	✓	✓	✓	✓	
Mounting of LL 861 900 220 rotary pulse encoder	**G04**	–	–	✓	✓	✓	✓	✓	✓	
Mounting of HOG 9 DN 1024 I rotary pulse encoder	**G05**	–	–	✓	✓	✓	✓	✓	✓	
Mounting of HOG 10 D 1024 I rotary pulse encoder	**G06**	–	–	✓	✓	✓	✓	✓	✓	
Mounting of POG 10 DN rotary pulse encoder (only in combination with separately driven fan or brake)	**G07**	–	–	–	–	–	✓	✓	✓	
Mounting of POG 9 rotary pulse encoder (only in combination with separately driven fan or brake)	**G08**	–	–	–	–	–	✓	✓	✓	
Mounting of Kübler Sendix 5834FS2 1024, SIL-2 rotary pulse encoder	**G21**	✓	✓	✓	✓	✓	✓	✓	✓	
Mounting of Kübler Sendix 5834FS3 1024, SIL-3 rotary pulse encoder	**G22**	✓	✓	✓	✓	✓	✓	✓	✓	
Mounting of HOGS100S-B76.626.01024.1 rotary pulse encoder	**G25**	–	–	–	–	–	✓	✓	✓	

For legends, see page 5/72.

© Innomotics 2024

Synchronous reluctance motors for SINAMICS converters – VSD4000 line

Cast-iron series Innomotics SD 1FP1514

Special versions	Additional identification code **-Z** with order code and plain text if required	Frame size								Motor version
		80	**90**	**112**	**132**	**160**	**180**	**200**	**225**	
		1FP15.4								Super Premium Efficiency
1FP15.4- . . . . . - . . . . -Z	Order code									
Special technology (continued)										
Mounting of LL FSI 862-184560-1024, SIL-2 rotary pulse encoder	**G27**	–	–	–	–	–	✓	✓	✓	
Mounting of a special type of rotary pulse encoder	**Y70** • and customer specifications	–	–	–	–	–	O. R.	O. R.	O. R.	
Mechanical version and degrees of protection										
Prepared for mountings, centering hole only	**G40**	✓	✓	✓	✓	✓	☐	☐	☐	
Prepared for mountings with D12 shaft	**G41**	✓	✓	✓	✓	✓	✓	✓	✓	
Prepared for mountings with D16 shaft	**G42**	✓	✓	✓	✓	✓	✓	✓	✓	
Mechanical protection for encoder	**G43**	✓	✓	✓	✓	✓	✓	✓	✓	
Protective cover	**H00**	✓	✓	✓	✓	✓	✓	✓	✓	
Screwed-on (instead of cast) feet	**H01**	–	–	✓	✓	✓	✓	✓	✓	
Vibration-proof version; vibration resistance to Class 3M4 according to IEC 60721-3-3:1994	**H02**	✓	✓	✓	✓	✓	✓	✓	✓	
Condensation drainage holes	**H03**	✓	✓	☐	☐	☐	☐	☐	☐	
Rust-resistant screws (externally)	**H07**	✓	✓	✓	✓	✓	✓	✓	✓	
IP66 degree of protection	**H19**	✓	✓	✓	✓	✓	✓	✓	✓	
IP65 degree of protection	**H20**	✓	✓	✓	✓	✓	✓	✓	✓	
IP54 degree of protection	**H21**	–	–	–	–	–	✓	✓	✓	
IP56 degree of protection	**H22**	✓	✓	✓	✓	✓	✓	✓	✓	
Drive-end seal for flange-mounted motors, oil-tight to 0.1 bar	**H23**	✓	✓	✓	✓	✓	✓	✓	✓	
Coolant temperature and installation altitude										
Coolant temperature –50 to +40 °C	**D02**	–	–	✓	✓	✓	✓	✓	✓	
Coolant temperature –40 to +40 °C	**D03**	✓	✓	✓	✓	✓	✓	✓	✓	
Coolant temperature –30 to +40 °C	**D04**	✓	✓	✓	✓	✓	✓	✓	✓	
Versions in accordance with standards and specifications										
Version according to UL and CSA (Canadian regulation)	**D39**	✓	✓	✓	✓	✓	✓	✓	✓	
TR CU product safety certificate EAC for Eurasian Customs Union	**D47**	✓	✓	✓	✓	✓	✓	✓	✓	
UKCA-marking		☐	☐	☐	☐	☐	☐	☐	☐	
Bearings and lubrication										
Regreasing device with M10 × 1 grease nipple according to DIN 71412 A	**L19**	–	–	–	–	–	✓	✓	✓	
Located bearing DE	**L20**	✓	✓	✓	✓	✓	✓	✓	✓	
Located bearing NDE	**L21**	✓	✓	✓	☐	☐	☐	☐	☐	
Bearing design for increased cantilever forces	**L22**	✓	✓	✓	✓	✓	✓	✓	✓	
Regreasing device	**L23**	–	–	✓	✓	✓	✓	✓	✓	
Bearings reinforced at both ends for DE and NDE, bearing size 63	**L25**	✓	✓	✓	✓	✓	✓	✓	✓	
Reinforced bearings at both DE and NDE, DE bearing for increased cantilever forces	**L28**	–	–	–	–	–	✓	✓	✓	
Bearing fohigh r axial tension forces	**L34**	–	–	✓	✓	✓	✓	✓	✓	
Bearing insulation NDE	**L51**	–	–	✓	✓	✓	✓	✓	✓	
Measuring nipple for SPM shock pulse measurement for bearing inspection	**Q01**	–	–	✓	✓	✓	✓	✓	✓	
Motor design VSD, higher speed up to .... rpm, vibration level .. acc. IEC60034-14, with or w/o routine test	**Y37**	O. R.	O. R.	O. R.	O. R.	O. R.	O. R.	O. R.	O. R.	
Balance and vibration severity										
Half-key balancing (standard)		☐	☐	☐	☐	☐	☐	☐	☐	
Balancing without feather key	**L01**	✓	✓	✓	✓	✓	✓	✓	✓	
Full-key balancing	**L02**	✓	✓	✓	✓	✓	✓	✓	✓	
Shaft and rotor										
Shaft extension with standard dimensions, without feather keyway	**L04**	✓	✓	✓	✓	✓	✓	✓	✓	
Standard, cylindrical shaft extension (second shaft extension) NDE acc. to EN 50347	**L05**	✓	✓	✓	✓	✓	✓	✓	✓	
Standard shaft made of stainless steel (e.g. 1.4021)	**L06**	✓	✓	✓	✓	✓	✓	✓	✓	
Shaft extension run-out in accordance with IEC 60072-1 precision class	**L07**	✓	✓	✓	✓	✓	✓	✓	✓	

For legends, see page 5/72.

© Innomotics 2024

Synchronous reluctance motors for SINAMICS converters – VSD4000 line

Cast-iron series Innomotics SD 1FP1514

Special versions	Additional identification code **-Z** with order code and plain text if required	Frame size								Motor version
		80	**90**	**112**	**132**	**160**	**180**	**200**	**225**	
		1FP15.4								Super Premium Efficiency
1FP15.4- . . . . . - . . . . -Z	Order code									
Shaft and rotor (continued)										
Shaft extension run-out, concentricity and perpendicularity in accordance with IEC 60072-1 precision class for flange-mounted motors	**L08**	✓	✓	✓	✓	✓	✓	✓	✓	
Non-standard cylindrical shaft extension, DE	**Y58** • and customer specifications	✓	✓	✓	✓	✓	✓	✓	✓	
Non-standard cylindrical shaft extension, NDE	**Y59** • and customer specifications	✓	✓	✓	✓	✓	✓	✓	✓	
Special shaft steel	**Y60** • and customer specifications	–	–	O. R.	O. R.	O. R.	O. R.	O. R.	O. R.	
Heating and ventilation										
Mounted separately driven fan	**F70**	–	–	–	✓	✓	✓	✓	✓	
Sheet metal fan cover	**F74**	☐	☐	✓	✓	✓	✓	✓	✓	
Metal external fan	**F76**	✓	✓	✓	✓	✓	✓	✓	✓	
Anti-condensation heating for 230 V (2 terminals)	**Q02**	✓	✓	✓	✓	✓	✓	✓	✓	
Anti-condensation heating for 115 V (2 terminals)	**Q03**	✓	✓	✓	✓	✓	✓	✓	✓	
Rating plate and additional rating plates										
Second rating plate, loose	**M10**	✓	✓	✓	✓	✓	✓	✓	✓	
Rating plate, stainless steel	**M11**	✓	✓	✓	✓	✓	✓	✓	✓	
Additional rating plate with customer specifications	**Y82** • and customer specifications	✓	✓	✓	✓	✓	✓	✓	✓	
Additional information on rating plate and on package label (max. 20 characters)	**Y84** • and customer specifications	✓	✓	✓	✓	✓	✓	✓	✓	
Adhesive label, supplied loose (printed with: Article No., Serial No.; 2 lines of text)	**Y85** • and customer specifications	–	–	✓	✓	✓	✓	✓	✓	
Extension of the liability for defects										
Extension of the liability for defects by 24 months to a total of 36 months (3 years) from delivery		☐	☐	☐	☐	☐	☐	☐	☐	
Packaging, safety notes, documentation and test certificates										
Inspection certificate 3.1 according to EN 10204	**B02**	✓	✓	✓	✓	✓	✓	✓	✓	
Document - Electrical datasheet	**B60**	✓	✓	✓	✓	✓	✓	✓	✓	
Document - Order dimensional drawing	**B61**	✓	✓	✓	✓	✓	✓	✓	✓	
Standard test (routine test) with acceptance	**B65**	–	–	✓	✓	✓	✓	✓	✓	
Remote acceptance	**B77**	–	–	–	–	–	–	–	✓	Only for: Combination with option codes B65, B67, B83
Hybrid acceptance	**B78**	–	–	–	–	–	–	–	✓	Only for: Combination with option codes B65, B67, B83
Type test with heat run for horizontal motors, with acceptance	**B83**	✓	✓	✓	✓	✓	✓	✓	✓	
"Basic" documentation package	**B90**	✓	✓	✓	✓	✓	✓	✓	✓	
"Advanced" documentation package	**B91**	✓	✓	✓	✓	✓	✓	✓	✓	
"Projects" documentation package	**B92**	✓	✓	✓	✓	✓	✓	✓	✓	

☐ Standard version
O Without additional charge
• This order code only determines the price of the version – Additional plain text is required.
✓ With additional charge
O. R. Possible on request
– Not possible

Note:
The catalog provides an overview of the available motor options but doesn't detail the correct logic combinations.
For a customized selection tailored to your specific requirements, please use the SPC at the following address:
configurator.innomotics.com

© Innomotics 2024

Overview

Slide rails with fixing bolts and tensioning screws according to DIN 42923

Slide rails are used to tension the belt of a machine easily and conveniently when there is no belt-tensioning pulley. They are fixed to the base using stone bolts or foundation blocks.

The assignment of slide rails to motor size can be found in DIN 42923. For motors of frame sizes 355 to 450, there are no standardized slide rails (please inquire).

Available from:

Lütgert & Co. GmbH
Postfach 42 51
33276 Gütersloh, Germany
Phone +49 (5241) 7407-0
Fax +49 (5241) 7407-90

www.luetgert-antriebe.de
Email: info@luetgert-antriebe.de

Taper pins according to DIN 258 with threaded ends and constant taper lengths

Taper pins are used for components that are repeatedly removed. The drilled hole is conically ground using a conical reamer until the pin can be pushed in by hand until the cone shoulder lies approx. 3 to 4 mm above the rim of the hole.

It can then be driven in using a hammer until it is correctly seated. The pin is removed from the drilled hole by screwing on the nut and tightening it.

Standardized taper pins are commercially available.

For instance, available from:

Otto Roth GmbH & Co. KG
Rutesheimer Strasse 22
70499 Stuttgart, Germany
Phone +49 711 1388-0
Fax +49 711 1388-233

www.ottoroth.de
Email: info@ottoroth.de

Foundation blocks according to DIN 799

The foundation blocks are inserted into the stone foundation and embedded in concrete. They are used for fixing machines of medium size, slide rails, pedestal bearings, base frames, etc. After the fixing bolts have been unscrewed, the machines can be shifted without them having to be lifted.

When the machine is initially installed, the foundation blocks that are bolted to the machine (without washers) and fitted with taper pins are not embedded with concrete until the machine has been fully aligned. In this case, the machine is positioned 2 to 3 mm lower. The difference in shaft height is compensated by inserting shims on final installation. The taper pins safeguard the exact position of the machine when it is repeatedly removed and replaced without the need for realignment.

Available from:

Lütgert & Co. GmbH
Postfach 42 51
33276 Gütersloh, Germany
Phone +49 (5241) 7407-0
Fax +49 (5241) 7407-90

www.luetgert-antriebe.de
Email: info@luetgert-antriebe.de

© Innomotics 2024

More information

Replacement motors and repair parts

- Commitment to provide replacement motors and repair parts following delivery of the motor:
  - for up to 3 years after delivery of the original motor, in the event of total motor failure, Innomotics will supply a comparable spare motor with regard to the mounting dimensions and functions (the type series may vary).
  - if a spare motor is provided within the 3-year period, this will not mean that the warranty restarts.
  - Replacement motors delivered after the active production of the motor series are also identified as spare motors on the rating plate.
  - Spare parts are offered only for these spare motors on request; repair and replacement are not possible.
  - after a period of 3 years (after the delivery of the original motor), it is only possible to repair these motors (depending on the availability of the spare parts required).
  - for up to 5 years after the delivery of the original motor, spare parts will be available and for a further 5 years, Innomotics will provide information about spare parts and will supply documents when required.
- When repair parts are ordered, the following details must be provided:
  - Designation and part number
  - Article No. and factory number of the motor.
- For bearing types, see Catalog Section 1 "Introduction".
- For standard components, a commitment to supply repaired parts does not apply.

You will find telephone numbers for other countries on our Internet site:
innomotics.com/hub/en/customer-service

© Innomotics 2024

Notes on the dimensions

Overview

- Dimension designations according to EN 50347 and IEC 60072.
- Fits
  The shaft extensions specified in the dimension tables (DIN 748) and centering spigot diameters (EN 50347) are machined with the following fits:

Dimension designation	ISO fit EN ISO 286-2	
D, DA	to 30	j6
	over 30 to 50	k6
	over 50	m6
N	to 250	j6
	over 250	h6
F, FA		h9
S	flange (FF)	H17

The drilled holes of couplings and belt pulleys should have an ISO fit of at least H7.

Dimension K: nominal dimension according IEC 60072-1, negative deviation of tolerance H17 possible

- Dimensional tolerances
  For the following dimensions, the admissible deviations are given below:

Dimension designation	Dimension	Admissible deviation
H	to 250	– 0.5
	over 250	– 1.0
E, EA		– 0.5

Keyways and feather keyways (dimensions GA, GC, F and FA) are made in compliance with DIN 6885 Part 1.

- All dimensions are specified in mm.
- The overall width of the motor is identical to the "AC" dimension.

Dimension sheet generator (within the SPC)

Overview

A dimensional drawing can be created in the "SPC" for every configurable motor.
A dimensional drawing can be requested for every other motor.

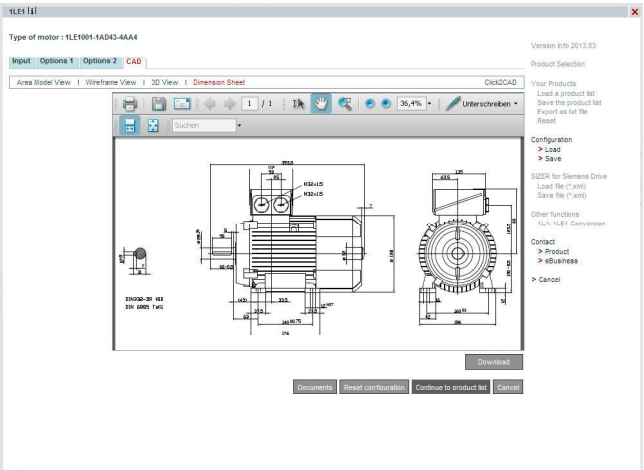

When a complete Article No. is entered with or without order codes, a dimensional drawing can be called up under the "Documentation" tab.

These dimensional drawings can be presented in different views and sections and printed.
The corresponding dimension sheets can be exported, saved and processed further in DXF format (interchange/import format for CAD systems) or as bitmap graphics.

Online access in the Siemens Industry Mall

The SPC can be used on the Internet without installation.
configurator.innomotics.com

5

© Innomotics 2024

Synchronous reluctance motors for SINAMICS converters – VSD4000 line

Super Premium Efficiency – self-ventilated · Frame sizes 80 M, 90 S, 90 L, 112 M to 200 L

Dimensional drawings

Type of construction IM B3

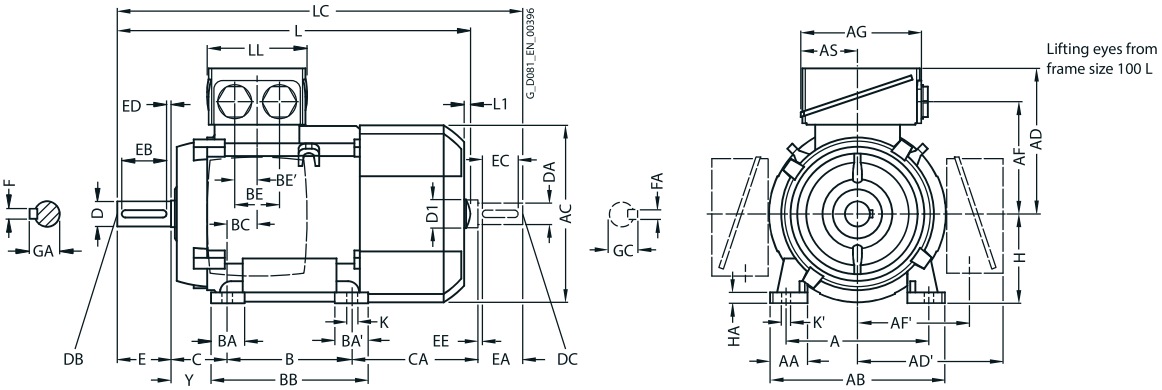

Types of construction IM B5 and IM V1

For flange dimensions, see page 1/59 (**Z** = the number of retaining holes)

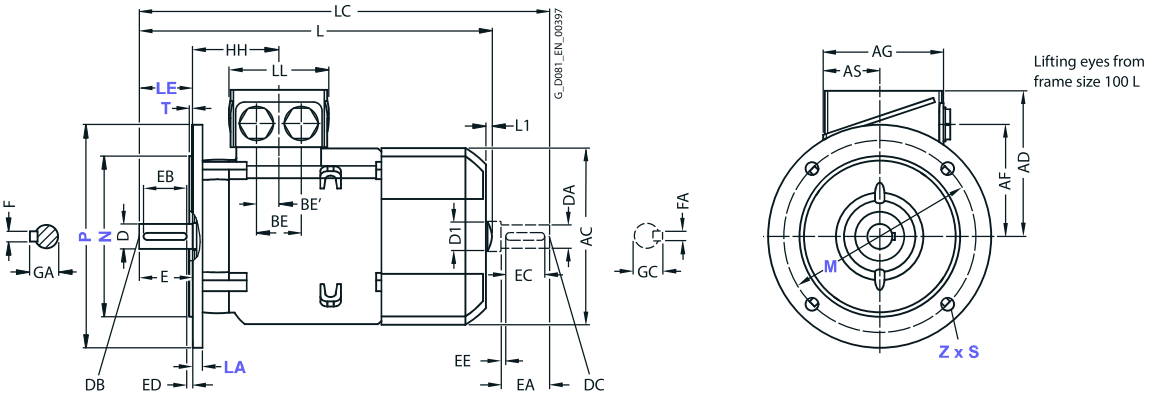

For motor			Dimension designation acc. to **IEC**																					
Frame size	Motor type 1FP1014-	No. of poles	A	AA	**AB**	AC	**AD**	AD'	AF	AF'	AG	AS	B	BA	BA'	BB	BC	BE	BE'	C	CA	**H**	HA	Y
80 M	0DB2, 0DB3	4	125	30.5	**150**	159	**121.5**	121.5	96.5	96.5	93	43	100	32	32	118	23	–	18[1]	50	113 148	**80**	8	41
90 S	0EB0	4	140	30.5	**165**	178	**126**	126	101.5	101.5	93	43	100	33	–	143	22.5	–[1]	18[1]	56	159	**90**	10	47
90 L	0EB4	4	140	30.5	**165**	178	**126**	126	101.5	101.5	93	43	125	33	–	143	22.5	–[1]	18[1]	56	154	**90**	10	47
112 M	1BB0, 1BB1, 1BB2	4	190	46	**226**	222	**177**	177	136.5	136.5	135	63.5	140	37.5	37.5	176	26	50	25	70	155	**112**	12	52
132 S	1CB0	4	216	53	**256**	262	**202**	202	159.5	159.5	155	70.5	140	38	76[2]	218[4]	26.5	48	24	89	166.5	**132**	15	69
132 M	1CB2	4	216	53	**256**	262	**202**	202	159.5	159.5	155	70.5	178	38	76	218	26.5	48	24	89	178.5	**132**	15	69
160 M	1DB2	4	254	60	**300**	314	**236.5**	236.5	190	190	175	77.5	210	44	89[3]	300[5]	47	57	28.5	108	192	**160**	18	85
160 L	1DB4	4	254	60	**300**	314	**236.5**	236.5	190	190	175	77.5	254	44	89	300	47	57	28.5	108	208	**160**	18	85
180 M	1EB2	4	279	65	**339**	356	**259**	259	212.5	212.5	175	77.5	241	80	100	328	30	57	28.5	121	232	**180**	20	95
180 L	1EB4	4	279	65	**339**	356	**259**	259	212.5	212.5	175	77.5	279	80	100	328	30	57	28.5	121	194	**180**	20	95
200 L	2AB5	4	318	70	**378**	396	**296**	296	238	238	225	102.5	305	90	100	355	45	75	37.5	133	202	**200**	25	108

1) Connecting hole for terminal box is on the side at the rear of the terminal box.
2) With screwed-on feet, dimension BA' is 38 mm.
3) With screwed-on feet, dimension BA' is 44 mm.
4) With screwed-on feet, dimension BB is 180 mm.
5) With screwed-on feet, dimension BB is 256 mm.

© Innomotics 2024

Synchronous reluctance motors for SINAMICS converters – VSD4000 line

Super Premium Efficiency – self-ventilated · Frame sizes 80 M, 90 S, 90 L, 112 M to 200 L

Dimensional drawings

Type of construction IM B35

For flange dimensions, see page 1/59 (**Z** = the number of retaining holes)

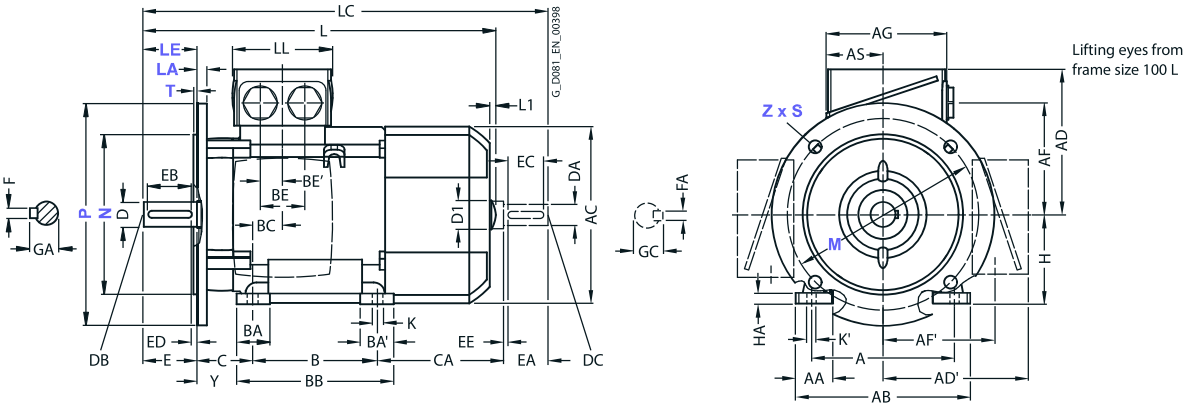

Type of construction IM B14

For flange dimensions, see page 1/59 (**Z** = the number of retaining holes)

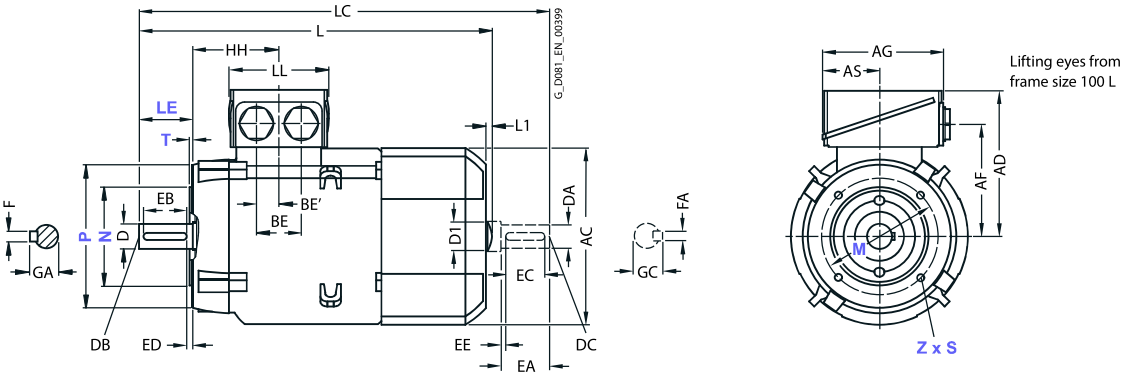

For motor			Dimension designation acc. to **IEC**								DE shaft extension							NDE shaft extension						
Frame size	Motor type 1FP10.4-	No. of poles	HH	K	K'	**L**[1]	L1	D1	LC	LL	D	DB	E	EB	ED	F	GA	DA	DC	EA	EC	EE	FA	GC
80 M	0DB2, 0DB3	4	73	9.5	13.5	**292** **327**	–	–	343 378	79	19	M6	40	32	4	6	21.5	19	M6	40	32	4	6	21.5
90 S	0EB0	4	78.5	10	14	**347**	–	–	405	79	24	M8	50	40	5	8	27	19	M6	40	32	4	6	21.5
90 L	0EB4	4	78.5	10	14	**387**	–	–	445	79	24	M8	50	40	5	8	27	19	M6	40	32	4	6	21.5
112 M	1BB0, 1BB1, 1BB2	4	96	12	16	**464**	7	32	475	112	28	M10	60	50	5	8	31	24	M8	50	40	5	8	27
132 S	1CB0	4	115.5	12	16	**465**	8.5	39	535.5	130	38	M12	80	70	5	10	41	28	M10	60	50	5	8	31
132 M	1CB2	4	115.5	12	16	**515**	8.5	39	585.5	130	38	M12	80	70	5	10	41	28	M10	60	50	5	8	31
160 M	1DB2	4	155	15	19	**606**	10	45	730	145	42	M16	110	90	10	12	45	42	M16	110	90	10	12	45
160 L	1DB4	4	155	15	19	**666**	10	45	790	145	42	M16	110	90	10	12	45	42	M16	110	90	10	12	45
180 M	1EB2	4	151	14.5	19	**698**	–	–	814	145	48	M16	110	100	5	14	52	48	M16	110	100	5	14	52
180 L	1EB4	4	151	14.5	19	**698**	–	–	814	145	48	M16	110	100	5	14	52	48	M16	110	100	5	14	52
200 L	2AB5	4	178	18.5	25	**746**	–	–	860	185	55	M20	110	100	5	16	59	55	M20	110	100	5	16	59

[1] The length is specified as far as the tip of the fan cover.

© Innomotics 2024

Synchronous reluctance motors for SINAMICS converters – VSD4000 line

Super Premium Efficiency – self-ventilated · Frame sizes 80 M, 90 S, 90 L, 112 M to 160 L

Dimensional drawings

Type of construction IM B3

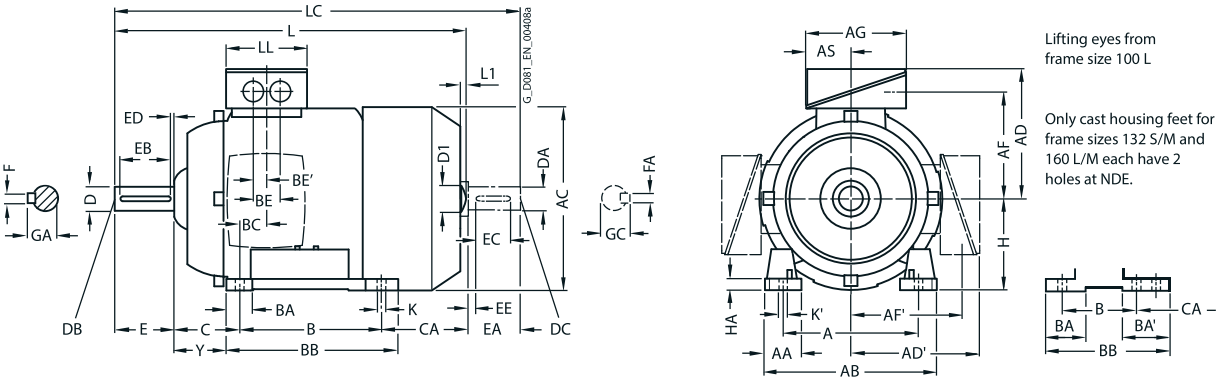

Types of construction IM B5 and IM V1

For flange dimensions, see page 1/59 (**Z** = the number of retaining holes)

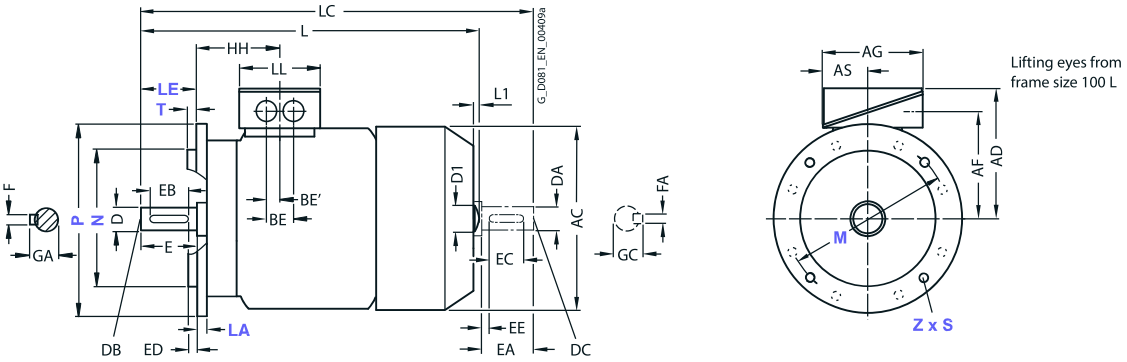

For motor			Dimension designation acc. to **IEC**																					
Frame size	Motor type 1FP15.4-	No. of poles	A	AA	**AB**	AC	**AD**	AD'	AF	AF'	AG	AS	B	BA	BA'	BB	BC	BE	BE'	C	CA	**H**	HA	Y
80 M	0DB2, 0DF2, 0DF3, 0DB3	4	125	30.5	**150**	162	**159**	159	122	122	126	62	100	32	32	118	22.5	36	18	50	112.5	**80**	8	41
90 S	0EB0, 0EF0,	4	140	30.5	**165**	180	**164**	164	127	127	126	62	100	33	54	143	24.5	36	18	56	159	**90**	11	47
90 L	0EF4, 0EB4	4	140	30.5	**165**	180	**164**	164	127	127	126	62	125	33	54	143	24.5	36	18	56	159 134	**90**	11	47
112 M	1BB0, 1BB1, 1BF1, 1BF2 1BB2	4	190	46	**226**	239	**195**	195	150	150	163	80.5	140	48	48	176	30	48	24	70	130	**112**	12	52
132 S	1CB0, 1CF0, 1CF1	4	216	53	**256**	281	**214.5**	214.5	169	169	163	80.5	140	52[1]	89[3]	218[5]	26.5	48	24	89	166.5	**132**	15	69
132 M	1CB2	4	216	53	**256**	281	**214.5**	214.5	169	169	163	80.5	140	52[1]	–	218[5]	26.5	48	24	89	178.5	**132**	15	69
160 M	1DB2, 1DF2, 1DF3	4	254	60	**300**	333.5	**261**	261	213	213	190	92	210	73[2]	117[4]	300[6]	37	60	30	108	192	**160**	18	85
160 L	1DF4, 1DB4	4	254	60	**300**	333.5	**261**	261	213	213	190	92	254	73[2]	117[4]	300[6]	37	60	30	108	192 208	**160**	18	85

[1] With screwed-on feet, dimension BA is 41 mm.
[2] With screwed-on feet, dimension BA is 51 mm.
[3] With screwed-on feet, dimension BA' is 41 mm.
[4] With screwed-on feet, dimension BA' is 51 mm.
[5] With screwed-on feet, dimension BB is 180 mm.
[6] With screwed-on feet, dimension BB is 256 mm.

© Innomotics 2024

Synchronous reluctance motors for SINAMICS converters – VSD4000 line

Dimensional drawings

Type of construction IM B35

For flange dimensions, see page 1/59 (**Z** = the number of retaining holes)

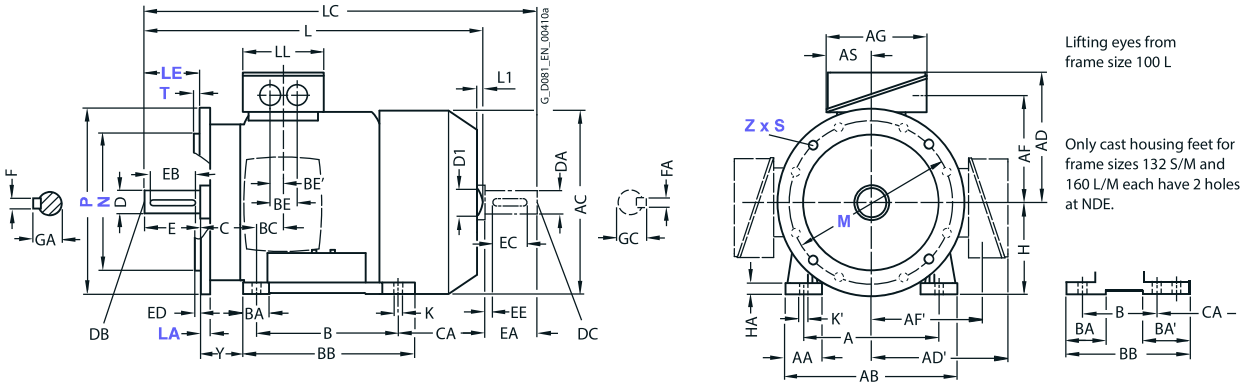

Type of construction IM B14

For flange dimensions, see page 1/59 (**Z** = the number of retaining holes)

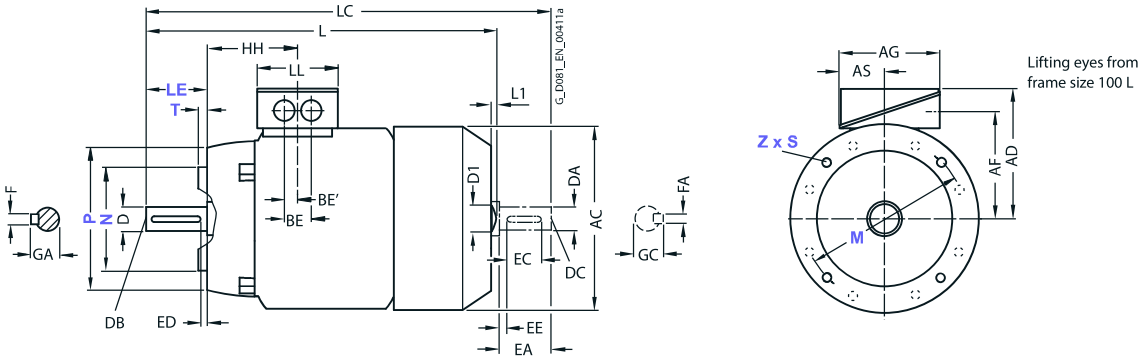

For motor			Dimension designation acc. to **IEC**								DE shaft extension							NDE shaft extension						
Frame size	Motor type 1FP15.4-	No. of poles	HH	K	K'	**L**	L1	D1	LC	LL	D	DB	E	EB	ED	F	GA	DA	DC	EA	EC	EE	FA	GC
80 M	0DB2, 0DF2, 0DF3, 0DB3	4	71.5	10	10	**292** **327**	–	–	343 378	102	19	M6	40	32	4	6	21.5	19	M6	40	32	4	6	21.5
90 S	0EB0, 0EF0,	4	79.5	10	10	**347**	–	–	405	102	24	M8	50	40	5	8	27	19	M6	40	27	4	6	21.5
90 L	0EF4, 0EB4	4	79.5	10	10	**347** **387**	–	–	445	102	24	M8	50	40	5	8	27	19	M6	40	27	4	6	21.5
112 M	1BB0, 1BB1, 1BF1, 1BF2 1BB2	4	100.5	12	16	**415.5** **465.5**	7	32	475	134	28	M10	60	50	5	8	31	24	M8	50	40	5	8	27
132 S	1CB0,1CF0 1CF1	4	115.5	12	16	**466.5**	8.5	39	535.5	134	38	M12	80	70	5	10	41	28	M10	60	50	5	8	31
132 M	1CB2	4	115.5	12	16	**516.5**	8.5	39	585.5	134	38	M12	80	70	5	10	41	28	M10	60	50	5	8	31
160 M	1DB2, 1DF2, 1DF3	4	145	14.5	18	**606**	10	45	730	165	42	M16	110	90	10	12	45	42	M16	110	90	10	12	45
160 L	1DF4, 1DB4	4	145	14.5	18	**606** **666**	10	45	730 790	165	42	M16	110	90	10	12	45	42	M16	110	90	10	12	45

© Innomotics 2024

Synchronous reluctance motors for SINAMICS converters – VSD4000 line

Super Premium Efficiency – self-ventilated · Frame sizes 180 M to 200 L

Dimensional drawings

Type of construction IM B3

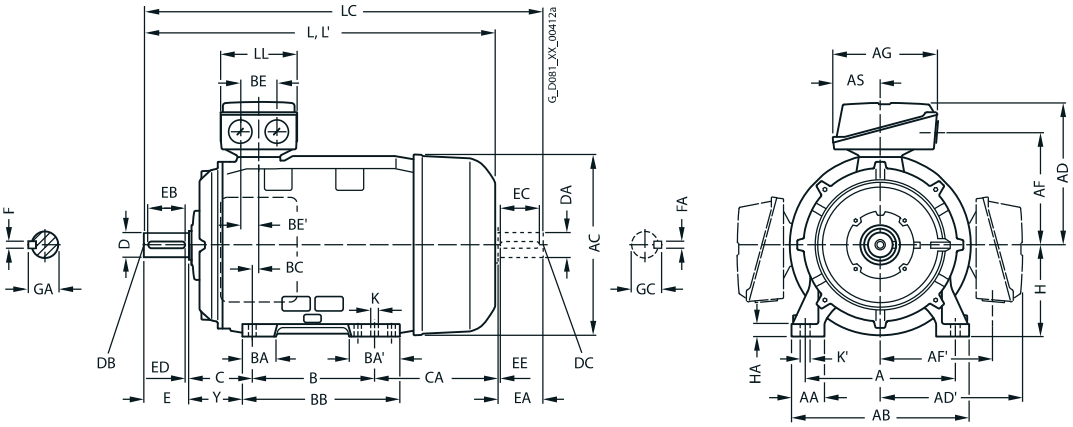

Types of construction IM B5 and IM V1

For flange dimensions, see page 1/59 (**Z** = the number of retaining holes)

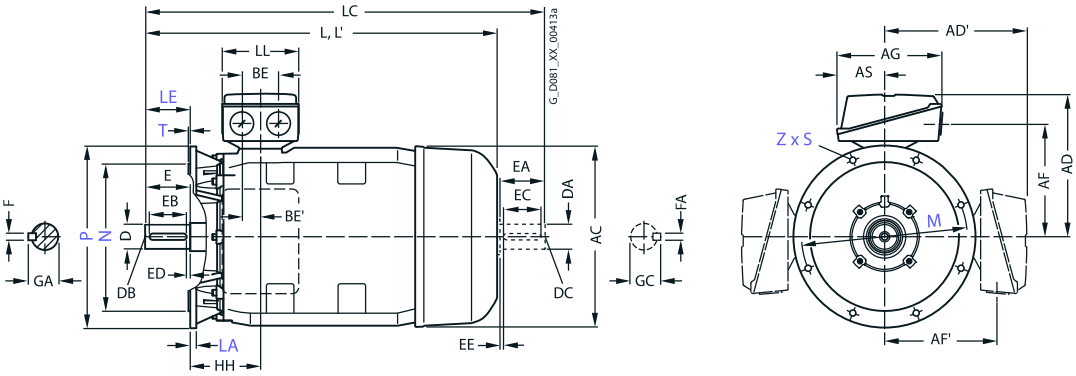

For motor			Dimension designation acc. to **IEC**																		
Frame size	Motor type 1FP15.4-	No. of poles	A	AA	**AB**	AC	**AD**	AD´	AF	AF´	AG	AS	B	BA	BA´	BB	BC	BE	BE´	C	CA
180 M/ 180 L	1EB2, 1EF2 1EB4	4	279	65	**339**	356	**286**	286	234	234	190	92	241	85	120	328	34	60	30	121	202
200 L	2AF4, 2AF5, 2AB5	4	318	70	**378**	396	**315**	315	259	259	266	112	305	104	104	355	31	85	42.5	133	177
225 S	2BB0	4	356	80	**436**	449	**338**	338	282	282	266	112	286	92	117	361	15	85	42.5	149	273
225 M	2BF2 2BB2	4	356	80	**436**	449	**338**	338	282	282	266	112	311	92	117	361	15	85	42.5	149	248

© Innomotics 2024

Synchronous reluctance motors for SINAMICS converters – VSD4000 line

Cast-iron series, self-ventilated – Super Premium Efficiency · Frame sizes 180 M to 200 L

Dimensional drawings

Type of construction IM B35

For flange dimensions, see page 1/59 (**Z** = the number of retaining holes)

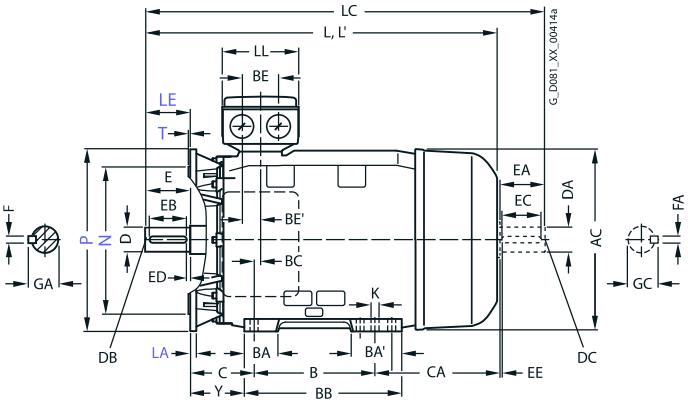

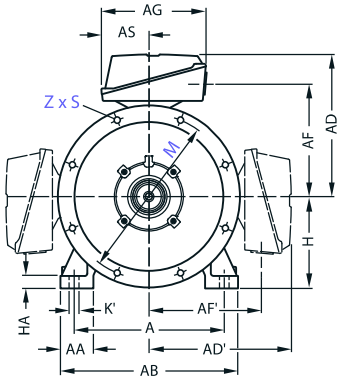

For motor			Dimension designation acc. to **IEC**									DE shaft extension							NDE shaft extension						
Frame size	Motor type 1FP15.4-	No. of poles	**H**	HA	Y	HH	K	K´	**L**	LC[1]	LL	D	DB	E	EB	ED	F	GA	DA	DC	EA	EC	EE	FA	GC
180 M/ 180 L	1EB2, 1EF2 1EB4	4	**180**	20	95	155	15	19	**668** **698**	784 814	164	48	M16	110	100	5	14	51.5	48	M16	110	100	5	14	51.5
200 L	2AF4, 2AF5, 2AB5	4	**200**	25	108	164	19	25	**721**	835	197	55	M20	110	100	5	16	59	55	M20	110	100	5	16	59
225 S	2BB0	4	**225**	34	124	164	19	25	**848**	903	197	60	M20	140	125	10	18	64	55	M20	110	100	5	16	59
225 M	2BF2 2BB2	4	**225**	34	124	164	19	25	**848** **928**	903 963	197	55 60	M20	110 140	100 125	5 10	16 18	59 64	48 55	M16 M20	110	100	5	14 16	51.5 59

[1] In the low-noise version, a second shaft extension and/or mounted encoder is not possible.

© Innomotics 2024

Standard induction motors optimized for converter operation – VSD10 line

Overview

Innomotics GP/SD VSD10 line motor series: 1LE109, 1LE159

Innomotics GP/SD VSD10 line motors are suitable for all sectors of industry as a result of their flexibility and the wide range of versions available.

Versions of the Innomotics GP/SD VSD10 line motor series: 1LE109, 1LE159

The motors are squirrel-cage induction motors with compact dimensions in a surface-cooled, enclosed version with self-ventilation. They have been specifically designed for converter operation.

1LE109 General Purpose for converter operation

- Four-quadrant operation with a converter, optimally coordinated to the SINAMICS G drive system. Can be operated with SINAMICS S (ALM, SLM) in four-quadrant operation.
- IP55 degree of protection
- IC411 cooling method, self-ventilated (IC416 cooling method, force-ventilated version optional)
- Housing: Aluminum
- Frame sizes 100 to 160

1LE159 Severe Duty for converter operation

- Four-quadrant operation with a converter, optimally coordinated to the SINAMICS G drive system. Can be operated with SINAMICS S (ALM, SLM) in four-quadrant operation.
- IP55 degree of protection
- IC411 cooling method, self-ventilated (IC416 cooling method, force-ventilated version optional)
- Housing: Cast iron
- Frame sizes 100 to 315

© Innomotics 2024

Benefits

The Innomotics GP/SD VSD10 line motor series has been specifically developed for operation with SINAMICS G converters.

- Optimizing the assignment of the motor active part to the Power Module results in low capital investment costs.
- The high power density and compact design ensure low space requirements combined with low weight.
- An optimally harmonized drive system is created as the motor is optimally coordinated and harmonized with the converter. For instance, the converter does not have to be derated or there is low temperature rise.
- Optionally, Innomotics GP motors with an aluminum housing (frame sizes 100 to 160) or Innomotics SD motors with a rugged cast-iron housing (frame sizes 100 to 315) are available.
- High degree of availability based on standard protection functions for converter operation – Pt1000 resistance thermometers (all frame sizes) and NDE insulated bearings (frame sizes 280 and 315).
- As a result of the optimized insulation system, a high degree of reliability is obtained for four-quadrant operation with SINAMICS converters.
- Fast and simple commissioning by transferring a motor code into the converter.

More power ratings

Innomotics GP/SD VSD10 line motors are designed as standard for operation with a 50 Hz, 60 Hz, and 87 Hz characteristic (up to frame size 200). No special ordering option is required.

Optimized for converter operation

The new motor series has been optimized for operation with SINAMICS G120, G130, and G150 converters with regard to converter output currents and voltage utilization. Four-quadrant operation is possible without restrictions with the SINAMICS G120 and SINAMICS S120 converter families. The motors can also be operated on other SINAMICS converters (SINAMICS G120P, SINAMICS G120C, SINAMICS G120D).

High degree of flexibility

By consistently utilizing the 1LE1 standard motor platform, almost all options of the 1LE1 line motors can also be used for the Innomotics GP/SD VSD10 line series.

Known and established design

Line and converter motors can be easily interchanged due to their identical dimensions and customer interfaces. The connection and operating philosophy is exactly the same as for 1LE1 line motors.

International applications

The motors are not subject to any minimum efficiency requirements for specific countries. As a consequence, they can be operated without additional MEPS certificates, also in the USA, for example.

© Innomotics 2024

Standard induction motors optimized for converter operation – VSD10 line

Application

As a result of the wide range of options, the Innomotics GP/SD VSD10 line motor series can be deployed in all industrial areas and sectors. Paper, steel, energy, chemical, water/waste water are examples of some typical sectors.

Various flange and foot-mounted designs according to EN 60034-7 are available. IP55 is the standard degree of protection (other degrees of protection optionally available).

The wide field of applications that can be addressed includes, for example, the following:

_ Pumps
_ Fans
_ Compressors
_ Cranes
_ Conveyor belts

Design

The Innomotics GP/SD VSD10 line motors are based on the 1LE1 platform. The principle design of the Innomotics GP/SD VSD10 line motors therefore corresponds to the 1LE1 line motors. The mechanical parts are identical. The motors are adapted to the converter by appropriately dimensioning the active part and VSD-specific rating plate data.

Technical specifications

Overview of technical specifications

This table lists the most important technical specifications.

Type of motor	Innomotics GP/SD VSD10 line IEC Low-Voltage Motors; three-phase induction motors
Connection types	Star/delta connection The connection used depends on the particular load characteristic.
No. of poles	2, 4
Frame sizes	100 ... 315
Rated power	_ 2-pole: 3 ... 90 kW (50 Hz characteristic); 3.45 ... 101 kW (60 Hz characteristic), 4.5 ... 12.5 kW (87 Hz characteristic) _ 4-pole: 2.2 ... 200 kW (50 Hz characteristic); 2.55 ... 230 kW (60 Hz characteristic), 3.7 ... 48 kW (87 Hz characteristic)
Frequencies	Characteristics for 50 Hz, 60 Hz and 87 Hz
Versions	Air-cooled, enclosed version: _ with self ventilation _ with forced ventilation (optional) Innomotics GP motors in an aluminum version, frame sizes 100 ... 160 Innomotics SD motors in a cast-iron version, frame sizes 100 ... 315
Marking	Only permitted for converter operation. As converter motors, IE classification according to IEC 60034-30-1 is not required.
Rated speed	_ 1500 rpm, 1800 rpm (up to frame size 315), and 2610 rpm (up to frame size 200) _ 3000 rpm, 3600 rpm (up to frame size 280), and 5220 rpm (up to frame size 112)
Rated torque	9.6 ... 1273 Nm (50 Hz characteristic); 9.2 ... 1220 Nm (60 Hz characteristic), 8.2 ... 176 Nm (87 Hz characteristic)
Insulation of the stator winding in accordance with EN 60034-1 (IEC 60034-1)	Temperature class F Reinforced insulation system (Advanced) up to 440 V motor connection voltage Special insulation system (Premium) up to 480 V motor connection voltage
Degree of protection acc. to EN 60034-5 (IEC 60034-5)	Standard IP55 optionally IP56 and IP65 Air-cooled, enclosed version
Cooling acc. to EN 60034-6 (IEC 60034-6)	_ Standard: Self-ventilated (IC411) _ Optional: Forced-air cooled (IC416)
Permissible coolant temperature and installation altitude	−20 ... +40 °C as standard, installation altitude up to 1000 m above sea level
Standard voltages acc. to EN 60038 (IEC 60038)	50 Hz line supplies: 400 V, 500 V, 690 V 60 Hz line supplies: 460 V, 600 V The rated motor voltage required is listed in the "Selection and ordering data" for the required motor.
Type of construction acc. to EN 60034-7 (IEC 60034-7)	_ Without flange: IM B3, IM B6, IM B7, IM B8, IM V5, IM V6 _ With flange: IM B5, IM B35, IM V1, IM V3
Paint finish Suitability of paint finish for climate group acc. to IEC 60721, Part 2-1	As standard: color RAL 7030 stone gray
Vibration severity grade acc. to EN 60034-14 (IEC 60034-14)	Grade A (normal)
Shaft extension acc. to DIN 748 (IEC 60072)	Balancing type: half-key balancing as standard
Sound pressure level acc. to EN ISO 1680 (tolerance +3 dB)	The corresponding sound pressure level is listed in the "Selection and ordering data" for the required motor.
Weights	The corresponding weight is listed in the "Selection and ordering data" for the required motor.
Modular mounting concept	Optional pulse encoder, brake, and separately driven fan according to ordering data
Options	See "Article No. supplements and special versions"

© Innomotics 2024

Technical specifications

Rating plate

In accordance with EN 60034-1, the approximate total weight is specified on the rating plate. The standard version of the rating plate is the international version in English.

For straightforward and fast commissioning with SINAMICS G converters, a motor code number is stamped on the rating plate (CODE). The rated frequencies deviate, depending on the slip, from 50 Hz, 60 Hz, and 87 Hz.

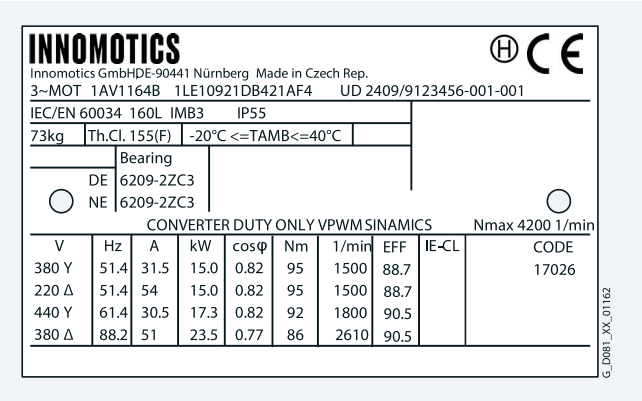

Example of a rating plate for Innomotics GP VSD10 line

Motors specially designed for converter operation

These motors have been specifically designed for converter operation. The catalog data apply for operation with Siemens SINAMICS G and SINAMICS S converters.

When operated with an alternative converter, the catalog data apply (thermal torque limits, maximum overload torques), approximately for the following general conditions:

- Minimum rated pulse frequencies:
  - 4 kHz at 400 V, up to 90 kW
  - 2 kHz at 500 V to 690 V, up to 132 kW
  - 1.25 kHz at 500 V to 690 V, 160 and 200 kW
- The converter can provide the rated voltage as listed in the catalog.
- Permissible voltage peaks for reinforced insulation system (Advanced):
  $\hat{U}_{\text{phase-to-phase}} \leq 1600$ V, $\hat{U}_{\text{phase-to-ground}} \leq 1400$ V, $t_s > 0.1$ µs
- Permissible voltage peaks for special insulation system (Premium):
  $\hat{U}_{\text{phase-to-phase}} \leq 2200$ V, $\hat{U}_{\text{phase-to-ground}} \leq 1500$ V, $t_s > 0.1$ µs

For SINAMICS G120 converters (from firmware version 4.7 and higher), the Innomotics GP/SD VSD10 line can be selected as the motor category and addressed using the motor code No. in the SINAMICS converter using the STARTER software or at the converter operator panel (Advanced Operator Panel (AOP), Basic Operator Panel (BOP)).

Rated voltage

The tolerance for the rated voltage is in accordance with EN 60034-1. A rated voltage range is not specified. The rated motor voltages are selected so that when operated with a SINAMICS G120 converter, the available voltage is optimally utilized.

Insulation

The motors can be operated with line voltages up to 690 V 3 AC with SINAMICS G converters and SINAMICS S converters (uncontrolled and controlled infeed) when maintaining the permissible peak voltages specified above.

Depending on the selected motor connection voltage, a special insulation system is used for converter operation.

- Up to 440 V motor voltage (480 V line voltage) reinforced insulation system (Advanced)
- From 480 V motor voltage (500 V line voltage) special insulation system (Premium)

For converter operation with the power ratings specified in the catalog, the motors can be utilized corresponding to thermal class 155 (F) (service factor 1.0).

Preferred supply system configurations are TT systems and TN systems with neutral-point grounding. In the case of a fault when connected to an IT system (ground fault), the insulation is excessively stressed. In this case, the process should be terminated as quickly as possible (t < 2 h), and the fault resolved. We do not recommend operation in corner-grounded TN systems.

Noise

The maximum sound pressure levels should be taken from the selection and ordering data.

© Innomotics 2024

Technical specifications

Separately driven fan

For the technical specifications of the separately driven fans, see page 1/95 "Technical specifications of separately driven fans".

Bearings

To prevent bearing current damage, converter motors are equipped with insulated bearing cartridges at the NDE, available as standard for frame sizes 280 and 315.

Insulated NDE bearings are optionally available for frame sizes 100 to 250. We recommend their use depending on the particular plant or system.

For converter operation, as a result of the basic principle employed, electrical bearing stress is created through the bearing lubricant film due to a voltage that is capacitively coupled in.

The physical cause of this is the common-mode voltage at the converter output that is inherent in the control method for a converter:
The sum of the three phase voltages is – in contrast to pure line operation – not equal to zero at every point in time.

In order to apply currents to the motor which are sinusoidal as far as possible (resulting in smoother running, lower oscillation torques, and lower stray losses), a high pulse frequency is required for the converter's output voltage. The related (very steep) switching edges of the converter output voltage (and also, therefore, of the common-mode voltage) cause correspondingly high capacitive currents and voltages on the machine's internal capacitances.

In the worst-case scenario, the capacitive voltage induced via the bearing can lead to random arcing through the bearing lubricating film, thus causing premature bearing aging or damage.

This physical effect, which occurs in isolated cases, has mostly been observed in connection with larger motors.

EMC-compliant installation of the drive system is a basic prerequisite for preventing premature bearing damage via bearing currents.

The most important measures for reducing bearing currents are:

- Insulated motor bearing at the NDE.
- Use cables with a symmetrical cable cross-section:

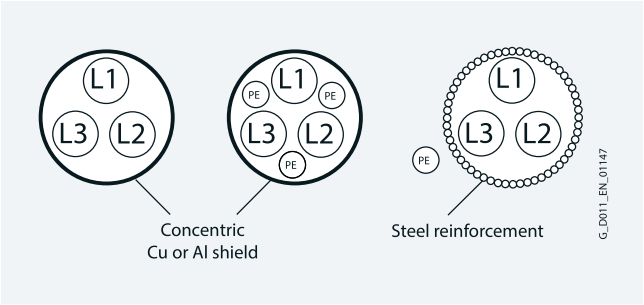

- Preference given to a line supply with isolated neutral point (IT system).
- Using grounding cables with low impedance over a wide frequency range (DC up to approximately 70 MHz): for example, braided copper ribbon cables, HF finely stranded wires.
- Separate HF equipotential-bonding cable between motor housing and driven machine.
- Separate HF equipotential-bonding cable between motor housing and converter PE busbar.
- 360° HF contacting of the cable shield on the motor housing and the converter PE busbar. This can be achieved using EMC screwed glands on the motor side and EMC shield clips on the converter side, for example.

© Innomotics 2024

Technical specifications

Torque limits (continuous duty)

The thermal torque limit characteristics of the Innomotics GP/SD VSD10 line define the maximum load torque for uninterrupted duty (S1) over the complete speed control range. The characteristics are different for all of the cooling methods. The speed control range is limited by the mechanical speed limit, which depends on the motor's mechanical design.

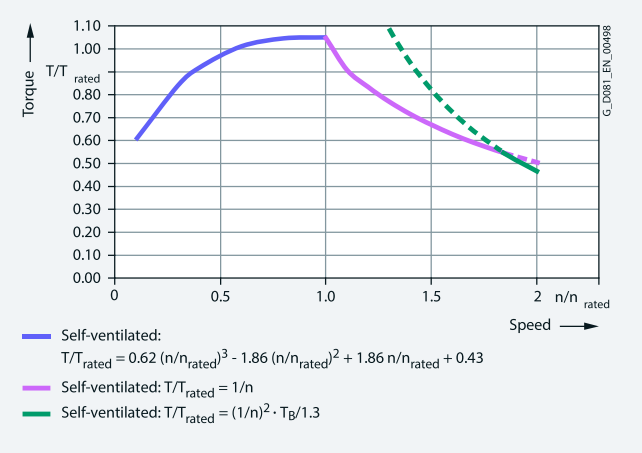

Torque limit characteristic for Innomotics GP/SD VSD10 line, self-ventilated

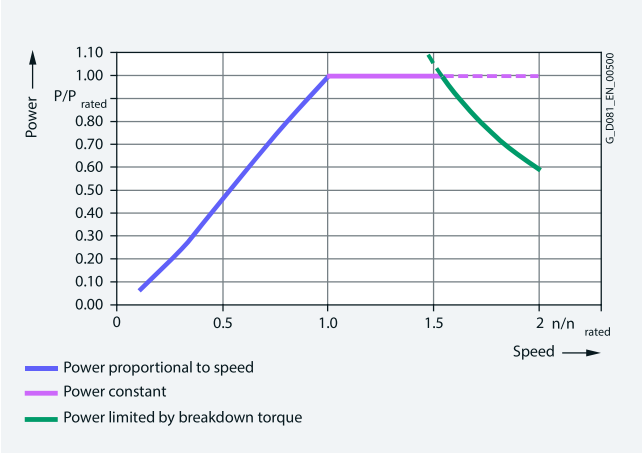

Power limit for Innomotics GP/SD VSD10 line, self-ventilated

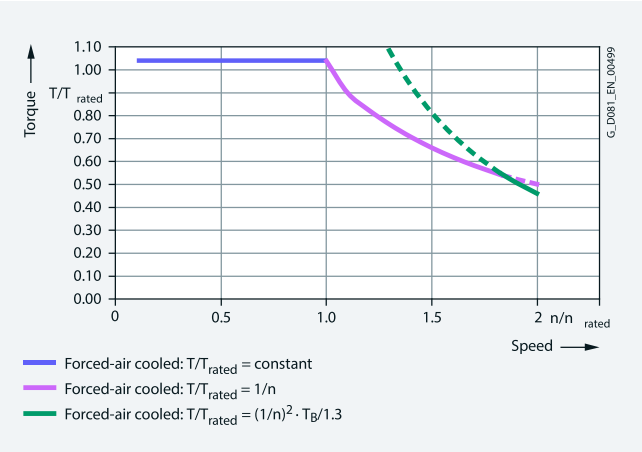

Torque limit characteristic for Innomotics GP/SD VSD10 line, forced-air cooled

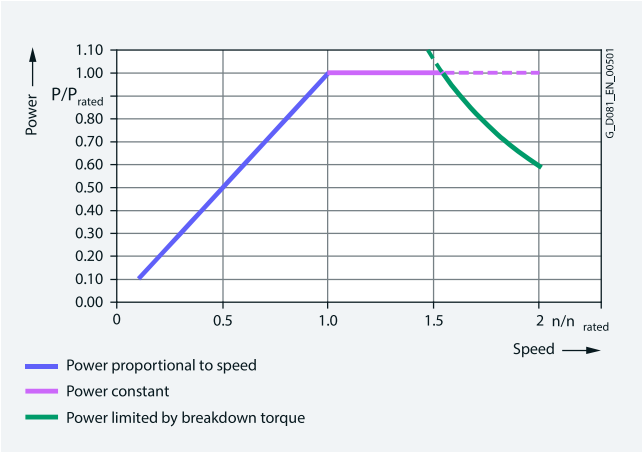

Power limit for Innomotics GP/SD VSD10 line, forced-air cooled

© Innomotics 2024

Standard induction motors optimized for converter operation – VSD10 line

Technical specifications

Maximum overload torques

The maximum overload torque output from the motor is defined by the overload torque characteristic over the complete speed control range. The reference variable is the breakdown torque at rated speed. The breakdown torque is calculated from the breakdown torque ratio and the rated torque. Operation at the maximum overload torque is only briefly permissible, for instance, when accelerating. The speed control range is limited by the mechanical speed limit, which depends on the motor's mechanical design.

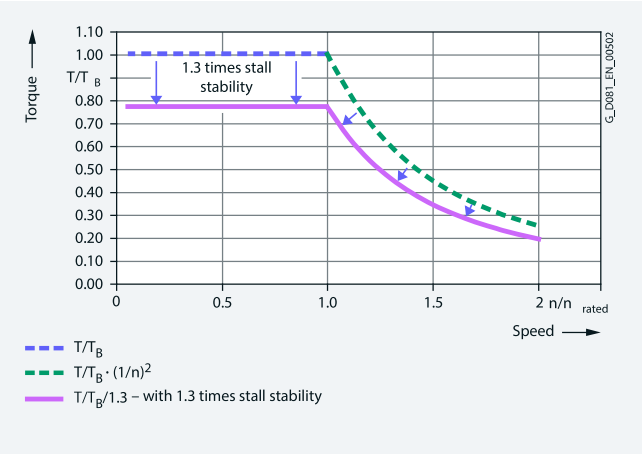

Overload torque characteristic for Innomotics GP/SD VSD10 line

5

© Innomotics 2024

Technical specifications

Additional information

Mechanical stress and grease lifetime

When motors are operated at speeds above the rated speed, the mechanical smooth running operation and the bearings are subjected to greater mechanical stress. This reduces the grease lifetime and the bearing lifetime.

Above 100 Hz, the motors must be balanced for twice the rated frequency.

Motor protection

A motor protection function can be implemented using the I^2t sensing function implemented in the converter software. If required, more precise motor protection can be afforded by direct temperature measurement using PTC thermistors, or Pt100/1000 resistance thermometers in the motor winding. Some converters from Siemens determine the motor temperature using the resistance of the temperature sensor. They can be set to a required temperature for alarm and tripping.

Motor connection

When connecting the motors, it is important to consider the restrictions for 1LE1 line motors as well as the maximum conductor cross-sections permitted for the converter.

Operating data for 50 Hz/60 Hz/87 Hz characteristics

Innomotics GP/SD VSD10 line motors are designed for operation with 50 Hz, 60 Hz and 87 Hz characteristics (87 Hz characteristic up to frame size 200).

Operation with the 50/60 Hz characteristic requires Y (star or wye) connection; operation with the 87 Hz characteristic requires Δ connection.

The corresponding power data are stamped on the rating plate as standard. An ordering option is not required.

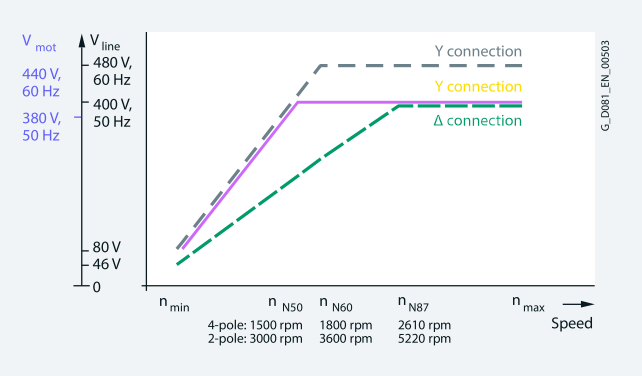

Operating characteristics of Innomotics GP/SD VSD10 line motors

Maximum operating speed

The maximum operating speed is limited by the mechanical speed limit of the motors as well as the available converter output frequency.

A significant increase in the sound pressure level can be expected when operating the motor above its rated speed (field weakening range).

Mechanical speed limits Innomotics GP/SD VSD10 line:

Frame size	Mechanical speed limits for 1LE1.92 motors	
	2-pole	4-pole
	n_{max} rpm	n_{max} rpm
100	5500	4200
112	5500	4200
132	4500	4200
160	4500	4200
180	4500	4200
200	4500	4200
225	4500	4500
250	3900	3700
280	3600	3000
315	–	2600

International use:

As special converter motors, Innomotics GP/SD VSD10 line motors are presently not subject to any minimum efficiency requirements in the EU and USA/Canada. However, other national certificates may be required (e.g. CSA-S safety in Canada).

Therefore, for use in USA, Canada and Mexico, we recommend:

Ordering with order code **D39** (version according to UL and CSA-S).

Note:
At the present time, national Chinese regulations regarding converter motors are being revised. A conclusive interpretation relating to the design still cannot be made. As a consequence, until further notice, for China we recommend that line motors suitable for converter operation are used with CEL (China Energy Label) (e.g. 1LE100. with order code **D34**).

© Innomotics 2024

Standard induction motors optimized for converter operation – VSD10 line

Technical specifications

Load characteristics for the line supply voltage: 400 V 3 AC, 50 Hz

Rated speed 3000 rpm					
Load characteristic				Innomotics GP/SD VSD10 line motors	SINAMICS G120 converters
$T \sim n^2$	T = const.				
	Speed control range				
	from 1500 rpm 1 : 2	from 750 rpm 1 : 4	from 300 rpm 1 : 10		
P_{max} kW	P_{max} kW	P_{max} kW	P_{max} kW	Motor type	Converter type
3	1.47	0.63	0.21	1LE1.92-1AA42-1...	6SL3210-1PE18-0.L1
4	1.97	0.84	0.27	1LE1.92-1BA22-1...	6SL3210-1PE21-1.L0
5.5	2.69	1.17	0.39	1LE1.92-1CA02-1...	6SL3210-1PE21-4.L0
7.5	3.64	1.59	0.54	1LE1.92-1CA12-1...	6SL3210-1PE21-8.L0
11	5.38	2.34	0.79	1LE1.92-1DA22-1...	6SL3210-1PE22-7.L0
15	7.33	3.19	1.08	1LE1.92-1DA32-1...	6SL3210-1PE23-3.L0
18.5	9.05	3.93	1.32	1LE1.92-1DA42-1...	6SL3210-1PE23-8.L0
22	10.77	4.69	1.59	1LE1592-1EA22-1...	6SL3210-1PE24-5.L0
30	14.64	6.37	2.13	1LE1592-2AA42-1...	6SL3210-1PE26-0.L0
37	18.08	7.86	2.66	1LE1592-2AA52-1...	6SL3210-1PE27-5.L0
45	21.99	9.54	3.21	1LE1592-2BA22-1...	6SL3210-1PE28-8.L0
55	26.86	11.65	3.91	1LE1592-2CA22-1...	6SL3210-1PE31-1.L0
75	36.63	15.85	5.33	1LE1592-2DA02-1...	6SL3210-1PE31-5.L0
90	43.91	19.00	6.38	1LE1592-2DA22-1...	6SL3210-1PE31-8.L0

Rated speed 1500 rpm					
Load characteristic				Innomotics GP/SD VSD10 line motors	SINAMICS converters
$T \sim n^2$	T = const.				
	Speed control range				
	from 750 rpm 1:2	from 375 rpm 1:4	from 150 rpm 1:10		
P_{max} kW	P_{max} kW	P_{max} kW	P_{max} kW	Motor type	Converter type
2.2	1.06	0.43	0.13	1LE1.92-1AB42-1...	6SL3210-1PE16-1.L1
3	1.45	0.59	0.18	1LE1.92-1AB52-1...	6SL3210-1PE18-0.L1
4	1.93	0.78	0.24	1LE1.92-1BB22-1...	6SL3210-1PE21-1.L0
5.5	2.65	1.07	0.33	1LE1.92-1CB02-1...	6SL3210-1PE21-4.L0
7.5	3.60	1.45	0.45	1LE1.92-1CB22-1...	6SL3210-1PE21-8.L0
11	5.31	2.14	0.66	1LE1.92-1DB22-1...	6SL3210-1PE22-7.L0
15	7.20	2.91	0.90	1LE1.92-1DB42-1...	6SL3210-1PE23-3.L0
18.5	8.94	3.61	1.11	1LE1592-1EB22-1...	6SL3210-1PE23-8.L0
22	10.61	4.29	1.32	1LE1592-1EB42-1...	6SL3210-1PE24-5.L0
30	14.48	5.85	1.80	1LE1592-2AB52-1...	6SL3210-1PE26-0.L0
37	17.89	7.23	2.22	1LE1592-2BB02-1...	6SL3210-1PE27-5.L0
45	21.68	8.76	2.70	1LE1592-2BB22-1...	6SL3210-1PE28-8.L0
55	26.53	10.72	3.30	1LE1592-2CB22-1...	6SL3210-1PE31-1.L0
75	36.15	14.61	4.50	1LE1592-2DB02-1...	6SL3210-1PE31-5.L0
90	43.43	17.55	5.40	1LE1592-2DB22-1...	6SL3210-1PE31-8.L0
106	53.05	21.44	6.60	1LE1592-3AB02-1...	6SL3210-1PE32-1.L0
130	63.66	25.73	7.92	1LE1592-3AB22-1...	6SL3210-1PE32-5.L0
160	77.23	31.21	9.60	1LE1592-3AB42-1...	6SL3224-0XE41-3.A0
200	96.48	38.99	12.00	1LE1592-3AB52-1...	6SL3224-0XE41-6.A0

Note:
The converter recommendation applies to standard ambient conditions (40 °C; 1000 m above sea level).

If, as a result of different ambient conditions, the rated motor power is significantly reduced, under certain circumstances, another converter is the optimum solution. Here, please use the configuration options for converters in the SPC.

© Innomotics 2024

Technical specifications

Innomotics GP/SD VSD10 line standard motors for converter operation with converter SINAMICS G120 Power Modules PM240-2

Rated power	Innomotics GP/SD VSD10 1LE109/1LE159	Frame size	SINAMICS G120 Power Module PM240-2	Pulse fre-quency	Frame size	System power loss, relative $P_{V,rel}$ as a % referred to P_{rated} Operating points at partial load [1] 0/25	0/50	0/100	50/25	50/50	50/100	100/50	at rated load [1] 100/100	IES class acc. to EN 50598-2
kW	Type		Type	kHz		%	%	%	%	%	%	%	%	
Line voltage 400 V 3 AC, 50/60 Hz, rated speed 3000 rpm														
3	1LE1.92-1AA42-1...	100 L	6SL3210-1PE18-0.L1	4	FSA	3.433	6.367	17.333	5.4	8.533	21.433	13.567	27.833	IES 1
4	1LE1.92-1BA22-1...	112 M	6SL3210-1PE21-1.L0	4	FSB	3.775	5.8	14.35	5.65	8.025	17.6	13.375	24.45	IES 1
5.5	1LE1.92-1CA02-1...	132 S	6SL3210-1PE21-4.L0	4	FSB	3.109	5.218	13.836	4.109	6.564	16.6	10.309	21.6	IES 1
7.5	1LE1.92-1CA12-1...	132 S	6SL3210-1PE21-8.L0	4	FSB	2.56	4.333	11.587	3.653	5.693	13.84	9.093	18.533	IES 2
11	1LE1.92-1DA22-1...	160 M	6SL3210-1PE22-7.L0	4	FSC	2.664	4.364	11.2	3.973	5.936	13.845	10.255	19.555	IES 1
15	1LE1.92-1DA32-1...	160 M	6SL3210-1PE23-3.L0	4	FSC	1.96	3.68	10.227	3.153	5.04	12.693	8.547	17.4	IES 1
18.5	1LE1592-1DA42-1...	160 L	6SL3210-1PE23-8.L0	4	FSD	2.308	3.649	8.854	3.53	5.022	10.865	8.059	15.07	IES 2
22	1LE1592-1EA22-1...	180 M	6SL3210-1PE24-5.L0	4	FSD	1.695	3.027	8.345	2.586	4.073	9.741	6.482	13.255	IES 2
30	1LE1592-2AA42-1...	200 L	6SL3210-1PE26-0.L0	4	FSD	1.33	2.703	7.327	2.233	3.737	8.88	6.233	12.797	IES 2
37	1LE1592-2AA52-1...	200 L	6SL3210-1PE27-5.L0	4	FSD	1.276	2.3	6.238	2.108	3.276	7.611	5.257	10.678	IES 2
45	1LE1592-2BA22-1...	225 M	6SL3210-1PE28-8.L0	4	FSE	1.127	2.093	5.749	2.044	3.144	7.016	5.538	10.471	IES 2
55	1LE1592-2CA22-1...	250 M	6SL3210-1PE31-1.L0	4	FSE	1.056	1.991	5.467	1.869	2.945	6.771	5.396	10.253	IES 2
75	1LE1592-2DA02-1...	280 S	6SL3210-1PE31-5.L0	4	FSF	1.064	1.847	4.784	2.064	2.971	6.207	5.564	9.799	IES 2
90	1LE1592-2DA22-1...	280 M	6SL3210-1PE31-8.L0	4	FSF	0.932	1.643	4.241	1.696	2.527	5.473	4.523	8.412	IES 2
Line voltage 400 V 3 AC, 50/60 Hz, rated speed 1500 rpm														
2.2	1LE1.92-1AB42-1...	100 L	6SL3210-1PE16-1.L1	4	FSA	5.273	8.273	19.273	6.682	10.364	27.682	14.364	32.091	IES 1
3	1LE1.92-1AB52-1...	100 L	6SL3210-1PE18-0.L1	4	FSA	4.433	7.233	16.4	5.867	9	22.367	12.433	27	IES 1
4	1LE1.92-1BB22-1...	112 M	6SL3210-1PE21-1.L0	4	FSB	4.45	6.9	16.1	5.675	8.425	20.025	11.5	24.3	IES 1
5.5	1LE1.92-1CB02-1...	132 S	6SL3210-1PE21-4.L0	4	FSB	3.618	6	15.618	4.764	7.455	18.818	10.545	23.036	IES 1
7.5	1LE1.92-1CB22-1...	132 M	6SL3210-1PE21-8.L0	4	FSB	3.413	5.24	12.533	4.787	6.84	15.24	10.013	19.733	IES 1
11	1LE1.92-1DB22-1...	160 M	6SL3210-1PE22-7.L0	4	FSC	3.255	4.918	11.445	4.482	6.355	13.936	9.418	18.336	IES 1
15	1LE1.92-1DB42-1...	160 L	6SL3210-1PE23-3.L0	4	FSC	2.94	4.387	10.073	4.013	5.627	12.06	8.14	15.8	IES 2
18.5	1LE1592-1EB22-1...	180 M	6SL3210-1PE23-8.L0	4	FSD	2.205	3.665	9.092	3.465	5.076	11.292	7.514	14.843	IES 2
22	1LE1592-1EB42-1...	180 L	6SL3210-1PE24-5.L0	4	FSD	2.232	3.527	8.5	3.1	4.545	10.145	6.15	12.841	IES 2
30	1LE1592-2AB52-1...	200 L	6SL3210-1PE26-0.L0	4	FSD	1.99	3.167	7.903	2.877	4.197	9.32	6.06	12.26	IES 2
37	1LE1592-2BB02-1...	225 S	6SL3210-1PE27-5.L0	4	FSD	1.53	2.635	6.938	2.551	3.797	8.568	6.051	11.924	IES 2
45	1LE1592-2BB22-1...	225 M	6SL3210-1PE28-8.L0	4	FSE	1.413	2.493	6.644	2.291	3.504	8.053	5.447	10.982	IES 2
55	1LE1592-2CB22-1...	250 M	6SL3210-1PE31-1.L0	4	FSE	1.298	2.427	7.129	2.104	3.36	8.082	5.3	11.051	IES 2
75	1LE1592-2DB02-1...	280 S	6SL3210-1PE31-5.L0	4	FSF	1.317	2.135	5.216	2.441	3.373	6.811	5.909	10.315	IES 2
90	1LE1592-2DB22-1...	280 M	6SL3210-1PE31-8.L0	4	FSF	1.224	2.033	5.132	2.002	2.92	6.357	4.579	8.95	IES 2
106	1LE1592-3AB02-1...	315 S	6SL3210-1PE32-1.L0	2	FSF	1.021	1.711	4.398	1.959	2.765	5.781	4.811	8.863	IES 2
130	1LE1592-3AB22-1...	315 M	6SL3210-1PE32-5.L0	2	FSF	0.947	1.543	3.828	1.754	2.468	5.094	4.256	7.9	IES 2
160	1LE1592-3AB42-1...	315 L	6SL3224-0XE41-3.A0	2	FSGX	1.343	1.981	4.441	2.224	2.974	5.771	4.762	8.614	IES 2
200	1LE1592-3AB52-1...	315 L	6SL3224-0XE41-6.A0	2	FSGX	1.149	1.879	4.737	1.871	2.703	5.838	4.154	8.251	IES 2

[1] Output frequency, rel. [%] referred to the rated speed/
Torque, rel. [%] referred to the rated torque T_{rated}.

© Innomotics 2024

Standard induction motors optimized for converter operation – VSD10 line

Article number code

Selection and ordering data

The article number consists of a combination of digits and letters and is divided into three hyphenated blocks to provide a better overview, e.g.:
1LE1592-1DB42-1GF4-Z
H00

The first block (positions 1 to 7) identifies the motor type. The second block (positions 8 to 12) defines the motor frame size and length, the number of poles and power and in some cases the frequency/voltage. In the third block (positions 13 to 16), the frequency/voltage, type of construction and further design features are encoded.

For deviations in the second and third block from the catalog codes either **Z** or **90** should be used as appropriate.

Ordering data:

- Complete Article No. and order code(s) or plain text
- If a quotation has been requested, please specify the quotation number in addition to the Article No.
- When ordering a complete motor as a spare part, please specify the works serial No. for the previously supplied motor as well as the Article No.

Structure of the Article No.:	Position: 1	2	3	4	5	6	7	-	8	9	10	11	12	-	13	14	15	16		
1st to 4th position: Digit, letter, letter, digit — Self-ventilated by fan mounted on and driven by the rotor	1	L	E	1																
5th position: Digit — Innomotics GP – aluminum housing; Innomotics SD – cast-iron housing					0 5															
6th position: Digit — VSD10 line motor (motor for converter operation)						9														
7th position: Digit — Standard efficiency class							2													
8th and 9th position: Digit, letter — **Motor frame size** (frame size as a combination of shaft height and overall length, encoded)									1 ... 3	A ... D										
10th position: Letter — **No. of poles** A: 2-pole B: 4-pole											A B									
11th position: Digit — **Laminated core length**												0 1 2 3 4 5								
12th and 13th position: 2 digits — **Voltage and frequency** [1] 380 V 3 AC, 50 Hz/440 V 3 AC, 60 Hz/380 V 3 AC, 87Hz; 480 V 3 AC, 50 Hz/550 V 3 AC, 60 Hz/480 V 3 AC, 87Hz; 660 V 3 AC, 50 Hz/660 V 3 AC, 87 Hz; Non-standard winding, requires order code M.. (e.g. M1Y)													2 2 3 9		1 6 3 0					
14th position: Letter — **Type of construction** (encoded with A ... V)																A ... V				
15th position: Letter — **Motor protection** (encoded with B ... Z; Z requires order code Q.. (e.g. Q3A)																	B ... Z			
16th position: Digit — **Terminal box position** 4: Terminal box top (normal version), 5: Terminal box right, 6: Terminal box left																		4 ... 6		
	Special order versions: encoded – additional order code required; not encoded – additional plain text required																		-	Z

[1] Depending on slip, the rated frequency is above 50 Hz, 60 Hz, or 87 Hz (see Technical specifications).

© Innomotics 2024

Selection and ordering data

Ordering example:

Selection criteria	Requirement	Structure of the Article No.
Motor type 1LE1	Standard motor for converter operation Innomotics GP VSD10 line, aluminum version	**1LE1092-■■■■■-■■■■**
Motor frame size	160 L	**1LE1092-1DB■■-■■■■**
No. of poles	4-pole	**1LE1092-1DB4■-■■■■**
Rated power	$P_{rated\ 50}$: 15 kW $P_{rated\ 60}$: 17.3 kW $P_{rated\ 87}$: 23.5 kW	
Voltage and frequency	380 V 3 AC, 50 Hz/440 V 3 AC, 60 Hz/380 V 3 AC, 87 Hz	**1LE1092-1DB42-1■■■**
Type of construction with special version	IM V5 with protective cover [1]	**1LE1092-1DB42-1C■■-Z** **H00**
Motor protection	Motor protection with PTC thermistors with 1 or 3 embedded temperature sensors for tripping	**1LE1092-1DB42-1CB■-Z** **H00**
Terminal box position	Terminal box right (viewed from DE)	**1LE1092-1DB42-1CB5-Z** **H00**

5

[1] Standard without protective cover – the protective cover is defined with order code **H00** and must be ordered in addition to the Article No. with **-Z** and this order code.

© Innomotics 2024

Standard induction motors optimized for converter operation – VSD10 line

Aluminum series Innomotics GP 1LE1092, line voltage 400 V, 50 Hz/460 V, 60 Hz/400 V, 87 Hz – self-ventilated

Selection and ordering data

$P_{rated, 50 Hz, 400 V}$	$P_{rated, 60 Hz, 460 V}$	$P_{rated, 87 Hz, 400 V}$	Frame size	Connection	Operating values at rated power f_{rated}	T_{rated}	$\eta_{rated, 4/4}$ for converter operation	$\cos\varphi_{rated, 4/4}$	I_{rated}	1LE1092 aluminum series Version specifically for converter operation
kW	kW	kW			Hz	Nm	%		A	Article No.
_ Insulation: Thermal class 155 (temperature class F), IP55 degree of protection, utilization in accordance with thermal class 155 (temperature class F)										
_ Operation with a SINAMICS G converter with uncontrolled infeed – rated motor voltage 380 V, 50 Hz/440 V, 60 Hz/380 V, 87 Hz										
3000 rpm	**3600 rpm**	**5220 rpm**	**2-pole**							
3			**100 L**	Y	52.9	9.5	81.5	0.87	6.4	**1LE1092-1AA42-1** ■■■
	3.45			Y	62.8	9.2	84.5	0.88	6.1	
		4.5		Δ	89.4	8.2	84.5	0.82	9.9	
4			**112 M**	Y	51.2	12.7	83.1	0.86	8.5	**1LE1092-1BA22-1** ■■■
	4.55			Y	61.2	12.1	84.5	0.88	8	
		6.6		Δ	88.2	12.1	84.5	0.83	14.2	
5.5			**132 S**	Y	51.4	17.5	84.7	0.89	11.1	**1LE1092-1CA02-1** ■■■
	6.3			Y	61.4	16.7	86.0	0.90	10.7	
7.5			**132 S**	Y	51.2	24.0	86.0	0.87	15.2	**1LE1092-1CA12-1** ■■■
	8.6			Y	61.2	22.8	87.5	0.88	14.7	
11			**160 M**	Y	51.3	35.0	87.6	0.85	22.5	**1LE1092-1DA22-1** ■■■
	12.6			Y	61.2	33.4	87.5	0.86	22	
15			**160 M**	Y	51.4	47.5	88.7	0.84	30.5	**1LE1092-1DA32-1** ■■■
	17.3			Y	61.4	45.9	89.5	0.86	29.5	
18.5			**160 L**	Y	51.1	59	89.0	0.86	36.5	**1LE1092-1DA42-1** ■■■
	21.3			Y	61.1	56.5	89.5	0.87	36	
1500 rpm	**1800 rpm**	**2610 rpm**	**4-pole**							
2.2			**100 L**	Y	52.9	14.0	79.7	0.81	5.2	**1LE1092-1AB42-1** ■■■
	2.55			Y	62.8	13.5	83.0	0.82	4.9	
		3.7		Δ	89.3	13.5	83.0	0.79	8.6	
3			**100 L**	Y	52.7	19.1	81.5	0.85	6.6	**1LE1092-1AB52-1** ■■■
	3.45			Y	62.6	18.3	85.0	0.86	6.2	
		5		Δ	89.3	18.3	85.0	0.79	11.3	
4			**112 M**	Y	52.3	25.5	83.1	0.85	8.6	**1LE1092-1BB22-1** ■■■
	4.55			Y	62.2	24.0	85.0	0.85	8.3	
		6.6		Δ	89.0	24.0	85.0	0.81	14.6	
5.5			**132 S**	Y	52.1	35.0	84.7	0.82	12	**1LE1092-1CB02-1** ■■■
	6.3			Y	62.0	33.5	87.0	0.84	11.3	
		9		Δ	88.8	33.0	87.0	0.81	19.4	
7.5			**132 M**	Y	51.7	47.5	86.0	0.82	16.2	**1LE1092-1CB22-1** ■■■
	8.6			Y	61.7	45.5	87.5	0.84	15.4	
		12.5		Δ	88.8	45.5	87.5	0.80	27	
11			**160 M**	Y	51.5	70.0	87.6	0.82	23.5	**1LE1092-1DB22-1** ■■■
	12.6			Y	61.4	67.0	88.5	0.82	23	
		17		Δ	88.3	62.0	88.5	0.78	37.5	
15			**160 L**	Y	51.4	95.0	88.7	0.82	31.5	**1LE1092-1DB42-1** ■■■
	17.3			Y	61.4	92.0	90.5	0.82	30.5	
		23.5		Δ	88.2	86.0	90.5	0.77	51	
For versions, see Article No. supplements and special versions.										■■■

All technical specifications refer to converter operation.

© Innomotics 2024

Standard induction motors optimized for converter operation – VSD10 line

Aluminum series Innomotics GP 1LE1092, line voltage 400 V, 50 Hz/460 V, 60 Hz/400 V, 87 Hz – self-ventilated

Motor type	$m_{IM\ B3}$ kg	J kgm²	L_{pfA}, tolerance +3 dB(A) load dB(A)	L_{WA}, tolerance +3 dB(A) load dB(A)	Mech. speed limit rpm	Terminal box	**Preferred SINAMICS G120 – PM240(-2)** Other SINAMICS converters also possible Operating mode: Low overload Type [1]	Frame size	IES class acc. to EN 50598-2
[redacted]									
[redacted]									
1LE1092-1AA42-1...	20	0.0034	79.0	91.0	5500	TB1F00	6SL3210-1PE18-0.L1	FSA	IES 1
		0.0034	79.0	91.0	5500		6SL3210-1PE18-0.L1	FSA	IES 1
		0.0034	83.0	95.1	5500		6SL3210-1PE21-4.L0	FSB	IES 1
1LE1092-1BA22-1...	25	0.0067	78.0	90.0	5500	TB1F00	6SL3210-1PE21-1.L0	FSB	IES 1
		0.0067	78.0	90.0	5500		6SL3210-1PE21-1.L0	FSB	IES 1
		0.0067	83.0	95.2	5500		6SL3210-1PE21-8.L0	FSB	IES 1
1LE1092-1CA02-1...	35	0.013	76.0	88.0	4500	TB1F00	6SL3210-1PE21-4.L0	FSB	IES 1
		0.013	76.0	88.0	4500		6SL3210-1PE21-4.L0	FSB	IES 1
1LE1092-1CA12-1...	40	0.016	76.0	88.0	4500	TB1H00	6SL3210-1PE21-8.L0	FSB	IES 2
		0.016	76.0	88.0	4500		6SL3210-1PE21-8.L0	FSB	IES 2
1LE1092-1DA22-1...	60	0.03	79.0	91.0	4500	TB1H00	6SL3210-1PE22-7.L0	FSC	IES 1
		0.03	78.0	90.0	4500		6SL3210-1PE22-7.L0	FSC	IES 1
1LE1092-1DA32-1...	68	0.036	79.0	92.0	4500	TB1J00	6SL3210-1PE23-3.L0	FSC	IES 1
		0.036	78.0	91.0	4500		6SL3210-1PE23-3.L0	FSC	IES 1
1LE1092-1DA42-1...	78	0.044	79.0	92.0	4500	TB1J00	6SL3210-1PE23-8.L0	FSD	IES 2
		0.044	78.0	91.0	4500		6SL3210-1PE23-8.L0	FSD	IES 2
[redacted]									
1LE1092-1AB42-1...	18	0.0059	79.0	91.0	4200	TB1F00	6SL3210-1PE16-1.L1	FSA	IES 1
		0.0059	79.0	91.0	4200		6SL3210-1PE16-1.L1	FSA	IES 1
		0.0059	81.0	93.0	4200		6SL3210-1PE21-1.L0	FSB	IES 1
1LE1092-1AB52-1...	22	0.0078	79.0	91.0	4200	TB1F00	6SL3210-1PE18-0.L1	FSA	IES 1
		0.0078	79.0	91.0	4200		6SL3210-1PE18-0.L1	FSA	IES 1
		0.0078	81.0	93.0	4200		6SL3210-1PE21-4.L0	FSB	IES 1
1LE1092-1BB22-1...	27	0.01	77.0	89.0	4200	TB1F00	6SL3210-1PE21-1.L0	FSB	IES 1
		0.01	77.0	89.0	4200		6SL3210-1PE21-1.L0	FSB	IES 1
		0.01	78.4	90.4	4200		6SL3210-1PE21-8.L0	FSB	IES 1
1LE1092-1CB02-1...	38	0.019	76.0	88.0	4200	TB1H00	6SL3210-1PE21-4.L0	FSB	IES 1
		0.019	76.0	88.0	4200		6SL3210-1PE21-4.L0	FSB	IES 1
		0.019	83.0	95.0	4200		6SL3210-1PE22-7.L0	FSC	IES 1
1LE1092-1CB22-1...	44	0.024	76.0	88.0	4200	TB1H00	6SL3210-1PE21-8.L0	FSB	IES 1
		0.024	76.0	88.0	4200		6SL3210-1PE21-8.L0	FSB	IES 1
		0.024	83.0	95.0	4200		6SL3210-1PE23-3.L0	FSC	IES 1
1LE1092-1DB22-1...	62	0.044	84.0	96.0	4200	TB1J00	6SL3210-1PE22-7.L0	FSC	IES 1
		0.044	82.0	94.0	4200		6SL3210-1PE22-7.L0	FSC	IES 1
		0.044	85.8	97.8	4200		6SL3210-1PE24-5.L0	FSD	IES 1
1LE1092-1DB42-1...	73	0.056	84.0	96.0	4200	TB1J00	6SL3210-1PE23-3.L0	FSC	IES 2
		0.056	82.0	94.0	4200		6SL3210-1PE23-3.L0	FSC	IES 2
		0.056	85.8	97.8	4200		6SL3210-1PE26-0.L0	FSD	IES 2

[1] In addition to the Power Module, a Control Unit and an Operator Panel are required (see Catalog D 31 and/or D 35).

© Innomotics 2024

Standard induction motors optimized for converter operation – VSD10 line

Aluminum series Innomotics GP 1LE1092, line voltage 500 V, 50 Hz/575 V, 60 Hz/500 V, 87 Hz – self-ventilated

Selection and ordering data

$P_{rated, 50 Hz, 500 V}$	$P_{rated, 60 Hz, 575 V}$	$P_{rated, 87 Hz, 500 V}$	Frame size	Connection	Operating values at rated power f_{rated}	T_{rated}	$\eta_{rated, 4/4}$ for converter operation	$\cos\varphi_{rated, 4/4}$	I_{rated}	1LE1092 aluminum series Version specifically for converter operation
kW	kW	kW			Hz	Nm	%		A	Article No.
_ Insulation: Thermal class 155 (temperature class F), IP55 degree of protection, utilization in accordance with thermal class 155 (temperature class F)										
_ Operation with a SINAMICS G converter with uncontrolled infeed – rated motor voltage 480 V, 50 Hz/550 V, 60 Hz/480 V, 87 Hz										
3000 rpm	**3600 rpm**	**5220 rpm**	**2-pole**							
3			**100 L**	Y	52.9	9.5	81.5	0.87	5.1	**1LE1092-1AA42-6** ■■■
	3.45			Y	63.0	9.2	84.5	0.88	4.85	
		5		Δ	89.6	9.1	84.5	0.85	8.4	
4			**112 M**	Y	51.3	12.7	83.1	0.86	6.7	**1LE1092-1BA22-6** ■■■
	4.55			Y	61.3	12.1	84.5	0.88	6.4	
		6.6		Δ	88.2	12.1	84.5	0.84	11.1	
5.5			**132 S**	Y	51.6	17.5	84.7	0.89	8.8	**1LE1092-1CA02-6** ■■■
	6.3			Y	61.6	16.7	86.0	0.90	8.5	
7.5			**132 S**	Y	51.2	24.0	86.0	0.87	12.1	**1LE1092-1CA12-6** ■■■
	8.6			Y	61.2	22.8	87.5	0.88	11.7	
11.0			**160 M**	Y	51.3	35.0	87.6	0.85	17.8	**1LE1092-1DA22-6** ■■■
	12.6			Y	61.3	33.4	87.5	0.86	17.6	
14			**160 M**	Y	51.1	44.5	88.7	0.84	22.5	**1LE1092-1DA32-6** ■■■
	16.5			Y	61.2	43.8	89.5	0.86	22.5	
17			**160 L**	Y	51.1	54.0	89.3	0.85	27	**1LE1092-1DA42-6** ■■■
	19.5			Y	61.1	51.7	89.5	0.86	26.5	
1500 rpm	**1800 rpm**	**2610 rpm**	**4-pole**							
2.2			**100 L**	Y	52.8	14.0	79.7	0.81	4.1	**1LE1092-1AB42-6** ■■■
	2.55			Y	62.8	13.5	83.0	0.82	3.95	
		3.7		Δ	89.6	13.5	83.0	0.79	6.8	
3			**100 L**	Y	52.6	19.1	81.5	0.85	5.2	**1LE1092-1AB52-6** ■■■
	3.45			Y	62.6	18.3	85.0	0.86	4.95	
		5		Δ	89.3	18.3	85.0	0.79	8.7	
4			**112 M**	Y	52.4	25.5	83.1	0.85	6.8	**1LE1092-1BB22-6** ■■■
	4.55			Y	62.3	24.1	85.0	0.85	6.6	
		6.6		Δ	89.1	24.0	85.0	0.81	12	
5.5			**132 S**	Y	52.0	35.0	84.7	0.82	9.5	**1LE1092-1CB02-6** ■■■
	6.3			Y	62.0	33.4	87.0	0.84	9	
		9		Δ	88.8	33.0	87.0	0.81	15.4	
7.5			**132 M**	Y	51.9	47.5	86.0	0.82	12.8	**1LE1092-1CB22-6** ■■■
	8.6			Y	61.9	45.6	87.5	0.84	12.3	
		12.5		Δ	88.7	45.5	87.5	0.80	21.5	
11			**160 M**	Y	51.5	70.0	87.6	0.82	18.4	**1LE1092-1DB22-6** ■■■
	12.6			Y	61.5	66.9	88.5	0.82	18.2	
		17		Δ	88.4	62.0	88.5	0.78	29.5	
13.5			**160 L**	Y	51.2	86.0	88.7	0.79	23	**1LE1092-1DB42-6** ■■■
	15.6			Y	61.2	82.8	90.5	0.81	22.5	
		23.5		Δ	88.3	86.0	90.5	0.77	40.5	
For versions, see Article No. supplements and special versions.										■■■

All technical specifications refer to converter operation.

© Innomotics 2024

Standard induction motors optimized for converter operation – VSD10 line

Aluminum series Innomotics GP 1LE1092, line voltage 500 V, 50 Hz/575 V, 60 Hz/500 V, 87 Hz – self-ventilated

Motor type	$m_{IM\ B3}$ kg	J kgm²	L_{pfA}, tolerance +3 dB(A) load dB(A)	L_{WA}, tolerance +3 dB(A) load dB(A)	Mech. speed limit rpm	Terminal box	**Preferred SINAMICS G120 – PM240(-2)** Other SINAMICS converters also possible Operating mode: Low overload Type [1]	Frame size	IES class acc. to EN 50598-2
[redacted]									
[redacted]									
1LE1092-1AA42-6...	20	0.0034	80.0	92.0	5500	TB1F00			
		0.0034	80.0	92.0	5500				
		0.0034	85.0	92.1	5500				
1LE1092-1BA22-6...	25	0.0067	79.0	91.0	5500	TB1F00			
		0.0067	79.0	91.0	5500				
		0.0067	85.0	91.1	5500		6SL3210-1PH21-4.L0	FSD	
1LE1092-1CA02-6...	35	0.013	77.0	89.0	4500	TB1F00	6SL3210-1PH21-4.L0	FSD	
		0.013	77.0	89.0	4500		6SL3210-1PH21-4.L0	FSD	
1LE1092-1CA12-6...	40	0.016	77.0	89.4	4500	TB1H00	6SL3210-1PH21-4.L0	FSD	
		0.016	77.0	89.4	4500		6SL3210-1PH21-4.L0	FSD	
1LE1092-1DA22-6...	60	0.03	80.0	92.0	4500	TB1H00	6SL3210-1PH22-0.L0	FSD	
		0.03	80.0	92.0	4500		6SL3210-1PH22-0.L0	FSD	
1LE1092-1DA32-6...	68	0.036	80.0	93.0	4500	TB1J00	6SL3210-1PH22-3.L0	FSD	
		0.036	80.0	93.0	4500		6SL3210-1PH22-3.L0	FSD	
1LE1092-1DA42-6...	78	0.044	80.0	93.0	4500	TB1J00	6SL3210-1PH22-7.L0	FSD	
		0.044	80.0	93.0	4500		6SL3210-1PH22-7.L0	FSD	
[redacted]									
1LE1092-1AB42-6...	18	0.0059	80.0	92.0	4200	TB1F00			
		0.0059	80.0	92.0	4200				
		0.0059	81.0	93.1	4200				
1LE1092-1AB52-6...	22	0.0078	80.0	92.0	4200	TB1F00			
		0.0078	80.0	92.0	4200				
		0.0078	81.0	93.1	4200				
1LE1092-1BB22-6...	27	0.01	79.0	91.0	4200	TB1F00			
		0.01	79.0	91.0	4200				
		0.01	80.0	92.3	4200		6SL3210-1PH21-4.L0	FSD	
1LE1092-1CB02-6...	38	0.019	77.0	89.0	4200	TB1H00	6SL3210-1PH21-4.L0	FSD	
		0.019	77.0	89.0	4200		6SL3210-1PH21-4.L0	FSD	
		0.019	83.0	95.4	4200		6SL3210-1PH22-0.L0	FSD	
1LE1092-1CB22-6...	44	0.024	77.0	89.0	4200	TB1H00	6SL3210-1PH21-4.L0	FSD	
		0.024	77.0	89.0	4200		6SL3210-1PH21-4.L0	FSD	
		0.024	83.0	95.4	4200		6SL3210-1PH22-3.L0	FSD	
1LE1092-1DB22-6...	62	0.044	85.0	98.0	4200	TB1J00	6SL3210-1PH22-0.L0	FSD	
		0.044	85.0	98.0	4200		6SL3210-1PH22-0.L0	FSD	
		0.044	85.0	97.8	4200		6SL3210-1PH23-5.L0	FSD	
1LE1092-1DB42-6...	73	0.056	85.0	98.0	4200	TB1J00	6SL3210-1PH22-3.L0	FSD	
		0.056	85.0	98.0	4200		6SL3210-1PH22-3.L0	FSD	
		0.056	85.0	97.8	4200		6SL3210-1PH24-2.L0	FSD	

[1] In addition to the Power Module, a Control Unit and an Operator Panel are required (see Catalog D 31 and/or D 35).

© Innomotics 2024

Standard induction motors optimized for converter operation – VSD10 line

Aluminum series Innomotics GP 1LE1092, line voltage 690 V, 50 Hz/690 V, 87 Hz – self-ventilated

Selection and ordering data

$P_{rated, 50 Hz, 690 V}$	$P_{rated, 60 Hz}$	$P_{rated, 87 Hz, 690 V}$	Frame size	Connection	Operating values at rated power f_{rated}	T_{rated}	$\eta_{rated, 4/4}$ for converter operation	$\cos\varphi_{rated, 4/4}$	I_{rated}	1LE1092 aluminum series Version specifically for converter operation
kW	kW	kW			Hz	Nm	%		A	Article No.
_ Insulation: Thermal class 155 (temperature class F), IP55 degree of protection, utilization in accordance with thermal class 155 (temperature class F)										
_ Operation with a SINAMICS G converter with uncontrolled infeed – rated motor voltage 660 V/50 Hz/660 V, 87 Hz										
3000 rpm	3600 rpm	5220 rpm	2-pole							
3			100 L	Y	52.7	9.5	81.5	0.87	3.7	1LE1092-1AA43-3 ■■■
		5		Δ	89.5	9.1	84.5	0.81	6.4	
4			112 M	Y	51.2	12.7	83.1	0.86	4.9	1LE1092-1BA23-3 ■■■
		6.6		Δ	88.2	12.1	84.5	0.83	8.2	
5.5			132 S	Y	51.6	17.5	84.7	0.89	6.4	1LE1092-1CA03-3 ■■■
7.5			132 S	Y	51.2	24.0	86.0	0.87	8.8	1LE1092-1CA13-3 ■■■
11			160 M	Y	51.3	35.0	87.6	0.85	12.9	1LE1092-1DA23-3 ■■■
15			160 M	Y	51.4	47.5	88.7	0.84	17.6	1LE1092-1DA33-3 ■■■
18.5			160 L	Y	51.3	59.0	89.3	0.86	20.5	1LE1092-1DA43-3 ■■■
1500 rpm	1800 rpm	2610 rpm	4-pole							
2.2			100 L	Y	52.9	14.0	79.7	0.81	3	1LE1092-1AB43-3 ■■■
		3.7		Δ	89.5	13.5	83.0	0.79	4.95	
3			100 L	Y	52.5	19.1	81.5	0.85	3.8	1LE1092-1AB53-3 ■■■
		5		Δ	89.5	18.3	85.0	0.79	6.5	
4			112 M	Y	52.5	25.5	83.1	0.85	5	1LE1092-1BB23-3 ■■■
		6.6		Δ	89.2	24.0	85.0	0.81	8.4	
5.5			132 S	Y	52.0	35.0	84.7	0.82	6.9	1LE1092-1CB03-3 ■■■
		9		Δ	88.7	32.9	87.0	0.81	11.2	
7.5			132 M	Y	51.7	47.5	86.0	0.82	6.9	1LE1092-1CB23-3 ■■■
		12.5		Δ	88.6	45.5	87.5	0.80	15.6	
11			160 M	Y	51.5	70.0	87.6	0.82	13.4	1LE1092-1DB23-3 ■■■
		17		Δ	88.3	62.0	88.5	0.78	21.5	
15			160 L	Y	51.4	95.0	88.7	0.82	18	1LE1092-1DB43-3 ■■■
		23.5		Δ	88.2	86.0	90.5	0.77	29.5	
For versions, see Article No. supplements and special versions.										■■■

5

All technical specifications refer to converter operation.

© Innomotics 2024

Standard induction motors optimized for converter operation – VSD10 line

Aluminum series Innomotics GP 1LE1092, line voltage 690 V, 50 Hz/690 V, 87 Hz – self-ventilated

Motor type	$m_{IM\ B3}$ kg	J kgm²	L_{pfA}, tolerance +3 dB(A) load dB(A)	L_{WA}, tolerance +3 dB(A) load dB(A)	Mech. speed limit rpm	Terminal box	**Preferred SINAMICS G120 – PM240(-2)** Other SINAMICS converters also possible Operating mode: Low overload Type [1]	Frame size	IES class acc. to EN 50598-2
[redacted]									
[redacted]									
1LE1092-1AA43-3...	20	0.0034	80.0	92.0	5500	TB1F00			
		0.0034	85.0	97.1	5500				
1LE1092-1BA23-3...	25	0.0067	79.0	91.0	5500	TB1F00			
		0.0067	85.0	97.2	5500		6SL3210-1PH21-4.L0	FSD	
1LE1092-1CA03-3...	35	0.013	77.0	89.0	4500	TB1F00	6SL3210-1PH21-4.L0	FSD	
1LE1092-1CA13-3...	40	0.016	77.0	89.0	4500	TB1H00	6SL3210-1PH21-4.L0	FSD	
1LE1092-1DA23-3...	60	0.03	80.0	92.0	4500	TB1H00	6SL3210-1PH21-4.L0	FSD	
1LE1092-1DA33-3...	68	0.036	80.0	93.0	4500	TB1J00	6SL3210-1PH22-0.L0	FSD	
1LE1092-1DA43-3...	78	0.044	80.0	93.0	4500	TB1J00	6SL3210-1PH22-3.L0	FSD	
[redacted]									
1LE1092-1AB43-3...	18	0.0059	80.0	92.0	4200	TB1F00			
		0.0059	81.0	93.1	4200				
1LE1092-1AB53-3...	22	0.0078	80.0	92.0	4200	TB1F00			
		0.0078	81.0	93.1	4200				
1LE1092-1BB23-3...	27	0.01	79.0	91.0	4200	TB1F00			
		0.01	80.0	92.3	4200		6SL3210-1PH21-4.L0	FSD	
1LE1092-1CB03-3...	38	0.019	77.0	89.0	4200	TB1H00	6SL3210-1PH21-4.L0	FSD	
		0.019	83.0	95.4	4200		6SL3210-1PH21-4.L0	FSD	
1LE1092-1CB23-3...	44	0.024	77.0	89.0	4200	TB1H00	6SL3210-1PH21-4.L0	FSD	
		0.024	83.0	95.4	4200		6SL3210-1PH22-0.L0	FSD	
1LE1092-1DB23-3...	62	0.044	85.0	98.0	4200	TB1J00	6SL3210-1PH21-4.L0	FSD	
		0.044	85.0	97.8	4200		6SL3210-1PH22-7.L0	FSD	
1LE1092-1DB43-3...	73	0.056	85.0	98.0	4200	TB1J00	6SL3210-1PH22-0.L0	FSD	
		0.056	85.0	97.8	4200		6SL3210-1PH23-5.L0	FSD	

[1] In addition to the Power Module, a Control Unit and an Operator Panel are required (see Catalog D 31 and/or D 35).

© Innomotics 2024

Standard induction motors optimized for converter operation – VSD10 line

Cast-iron series Innomotics SD 1LE1592, line voltage 400 V, 50 Hz/460 V, 60 Hz/400 V, 87 Hz – self-ventilated

Selection and ordering data

$P_{rated, 50 Hz, 400 V}$	$P_{rated, 60 Hz, 460 V}$	$P_{rated, 87 Hz, 400 V}$	Frame size	Connection	Operating values at rated power f_{rated}	T_{rated}	$\eta_{rated, 4/4}$ for converter operation	$\cos\varphi_{rated, 4/4}$	I_{rated}	1LE1592 cast-iron series Version specifically for converter operation
kW	kW	kW			Hz	Nm	%		A	Article No.
_ Insulation: Thermal class 155 (temperature class F), IP55 degree of protection, utilization in accordance with thermal class 155 (temperature class F)										
_ Operation with a SINAMICS G converter with uncontrolled infeed – rated motor voltage 380 V, 50 Hz/440 V, 60 Hz/380 V, 87 Hz										
3000 rpm	3600 rpm	5220 rpm	2-pole							
3			100 L	Y	52.9	9.6	81.5	0.87	6.4	1LE1592-1AA42-1 ■■■
	3.45			Y	62.8	9.2	84.5	0.88	6.1	
		4.5		Δ	89.4	8.2	84.5	0.82	9.9	
4.0			112 M	Y	51.2	12.7	83.1	0.86	8.5	1LE1592-1BA22-1 ■■■
	4.6			Y	61.2	12.1	84.5	0.88	8	
		6.6		Δ	88.2	12.1	84.5	0.83	14.2	
5.5			132 S	Y	51.4	17.5	84.7	0.89	11.1	1LE1592-1CA02-1 ■■■
	6.3			Y	61.4	16.7	86.0	0.90	10.7	
7.5			132 S	Y	51.2	24.0	86.0	0.87	15.2	1LE1592-1CA12-1 ■■■
	8.6			Y	61.2	22.8	87.5	0.88	14.7	
11			160 M	Y	51.3	35.0	87.6	0.85	22.5	1LE1592-1DA22-1 ■■■
	12.6			Y	61.2	33.4	87.5	0.86	22	
15.0			160 M	Y	51.4	47.5	88.7	0.84	30.5	1LE1592-1DA32-1 ■■■
	17.3			Y	61.4	45.9	89.5	0.86	29.5	
18.5			160 L	Y	51.1	59.0	89.0	0.86	36.5	1LE1592-1DA42-1 ■■■
	21.3			Y	61.1	56.5	89.5	0.87	36	
22			180 M	Y	51.0	70	89.9	0.87	42.5	1LE1592-1EA22-1 ■■■
	24.5			Y	60.9	65.0	89.5	0.87	41.5	
30			200 L	Y	50.9	95	90.7	0.84	60	1LE1592-2AA42-1 ■■■
	33.5			Y	60.9	88.9	91.5	0.84	57	
37			200 L	Y	50.8	118	91.2	0.88	70	1LE1592-2AA52-1 ■■■
	41.5			Y	60.7	110.1	91.7	0.89	67	
45			225 M	Y	50.7	143	91.7	0.88	85	1LE1592-2BA22-1 ■■■
	51			Y	60.7	135.0	92.4	0.88	82	
55			250 M	Y	50.6	175	92.1	0.88	103	1LE1592-2CA22-1 ■■■
	62			Y	60.6	164.0	92.4	0.88	100	
75			280 S	Y	50.5	240	93.0	0.87	141	1LE1592-2DA02-1 ■■■
	84			Y	60.5	223.0	93.0	0.87	136	
90			280 M	Y	50.4	285	93.0	0.88	167	1LE1592-2DA22-1 ■■■
	101			Y	60.4	268	93.0	0.88	162	
For versions, see Article No. supplements and special versions.										■■■

All technical specifications refer to converter operation.

© Innomotics 2024

Standard induction motors optimized for converter operation – VSD10 line

Cast-iron series Innomotics SD 1LE1592, line voltage 400 V, 50 Hz/460 V, 60 Hz/400 V, 87 Hz – self-ventilated

Motor type	$m_{IM\ B3}$ kg	J kgm²	L_{pfA}, tolerance +3 dB(A) load dB(A)	L_{WA}, tolerance +3 dB(A) load dB(A)	Mech. speed limit rpm	Terminal box	**Preferred** **SINAMICS G120 – PM240(-2)** Other SINAMICS converters also possible Operating mode: Low overload Type [1]	Frame size	IES class acc. to EN 50598-2
1LE1592-1AA42-1...	31	0.0034	79.0	91.0	5500	TB1F01	6SL3210-1PE18-0.L1	FSA	IES 1
		0.0034	79.0	91.0	5500		6SL3210-1PE18-0.L1	FSA	IES 1
		0.0034	83.0	95.1	5500		6SL3210-1PE21-4.L0	FSB	IES 1
1LE1592-1BA22-1...	36	0.0067	78.0	90.0	5500	TB1F01	6SL3210-1PE21-4.L0	FSB	IES 1
		0.0067	78.0	90.0	5500		6SL3210-1PE21-4.L0	FSB	IES 1
		0.0067	83.0	95.2	5500		6SL3210-1PE22-7.L0	FSC	IES 1
1LE1592-1CA02-1...	53	0.013	76.0	88.0	4500	TB1H01	6SL3210-1PE21-8.L0	FSB	IES 1
		0.013	76.0	88.0	4500		6SL3210-1PE21-8.L0	FSB	IES 1
1LE1592-1CA12-1...	58	0.016	76.0	88.0	4500	TB1H01	6SL3210-1PE22-7.L0	FSC	IES 2
		0.016	76.0	88.0	4500		6SL3210-1PE22-7.L0	FSC	IES 2
1LE1592-1DA22-1...	87	0.03	79.0	91.0	4500	TB1J01	6SL3210-1PE23-3.L0	FSC	IES 1
		0.03	78.0	90.0	4500		6SL3210-1PE23-3.L0	FSC	IES 1
1LE1592-1DA32-1...	95	0.036	79.0	92.0	4500	TB1J01	6SL3210-1PE23-8.L0	FSD	IES 1
		0.036	78.0	91.0	4500		6SL3210-1PE23-8.L0	FSD	IES 1
1LE1592-1DA42-1...	105	0.044	79.0	92.0	4500	TB1J01	6SL3210-1PE23-8.L0	FSD	IES 2
		0.044	78.0	91.0	4500		6SL3210-1PE23-8.L0	FSD	IES 2
1LE1592-1EA22-1...	145	0.069	79.0	92.0	4500	TB1J01	6SL3210-1PE24-5.L0	FSD	IES 2
		0.069	78.0	91.0	4500		6SL3210-1PE24-5.L0	FSD	IES 2
1LE1592-2AA42-1...	191	0.124	78.0	91.0	4500	TB1L01	6SL3210-1PE26-0.L0	FSD	IES 2
		0.124	78.0	91.0	4500		6SL3210-1PE26-0.L0	FSD	IES 2
1LE1592-2AA52-1...	223	0.15	76.0	89.0	4500	TB1L01	6SL3210-1PE27-5.L0	FSD	IES 2
		0.15	76.0	89.0	4500		6SL3210-1PE27-5.L0	FSD	IES 2
1LE1592-2BA22-1...	280	0.22	78.0	90.0	4500	TB1L01	6SL3210-1PE28-8.L0	FSE	IES 2
		0.22	80.0	93.0	4500		6SL3210-1PE28-8.L0	FSE	IES 2
1LE1592-2CA22-1...	360	0.4	78.0	92.0	3900	TB1N01	6SL3210-1PE31-1.L0	FSE	IES 2
		0.4	82.0	96.0	3900		6SL3210-1PE31-1.L0	FSE	IES 2
1LE1592-2DA02-1...	470	0.72	78.0	92.0	3600	TB1N01	6SL3210-1PE31-5.L0	FSF	IES 2
		0.72	82.0	96.0	3600		6SL3210-1PE31-5.L0	FSF	IES 2
1LE1592-2DA22-1...	530	0.83	78.0	92.0	3600	TB1N01	6SL3210-1PE31-8.L0	FSF	IES 2
		0.83	82.0	96.0	3600		6SL3210-1PE31-8.L0	FSF	IES 2

[1] In addition to the Power Module, a Control Unit and an Operator Panel are required (see Catalog D 31 and/or D 35).

© Innomotics 2024

Standard induction motors optimized for converter operation – VSD10 line

Cast-iron series Innomotics SD 1LE1592, line voltage 400 V, 50 Hz/460 V, 60 Hz/400 V, 87 Hz – self-ventilated

Selection and ordering data

$P_{rated, 50 Hz, 400 V}$	$P_{rated, 60 Hz, 460 V}$	$P_{rated, 87 Hz, 400 V}$	Frame size	Connection	Operating values at rated power f_{rated}	T_{rated}	$\eta_{rated, 4/4}$ for converter operation	$\cos\varphi_{rated, 4/4}$	I_{rated}	1LE1592 cast-iron series Version specifically for converter operation
kW	kW	kW			Hz	Nm	%		A	Article No.
_ Insulation: Thermal class 155 (temperature class F), IP55 degree of protection, utilization in accordance with thermal class 155 (temperature class F)										
_ Operation with a SINAMICS G converter with uncontrolled infeed – rated motor voltage 380 V, 50 Hz/440 V, 60 Hz/380 V, 87 Hz										
1500 rpm	1800 rpm	2610 rpm	4-pole							
2.2			100 L	Y	52.9	14.0	79.7	0.81	5.2	1LE1592-1AB42-1 ■■■
	2.55			Y	62.8	13.5	83.0	0.82	4.9	
		3.7		Δ	89.3	13.5	83.0	0.79	8.6	
3			100 L	Y	52.7	19.1	81.5	0.85	6.6	1LE1592-1AB52-1 ■■■
	3.45			Y	62.6	18.3	85.0	0.86	6.2	
		5		Δ	89.3	18.3	85.0	0.79	11.3	
4			112 M	Y	52.3	25.5	83.1	0.85	8.6	1LE1592-1BB22-1 ■■■
	4.55			Y	62.2	24.0	85.0	0.85	8.3	
		6.6		Δ	89.0	24.0	85.0	0.81	14.6	
5.5			132 S	Y	52.1	35.0	84.7	0.82	12	1LE1592-1CB02-1 ■■■
	6.3			Y	62.0	33.5	87.0	0.84	11.3	
		9		Δ	88.8	33.0	87.0	0.81	19.4	
7.5			132 M	Y	51.7	47.5	86.0	0.82	16.2	1LE1592-1CB22-1 ■■■
	8.6			Y	61.7	45.5	87.5	0.84	15.4	
		12.5		Δ	88.8	45.5	87.5	0.80	27.0	
11			160 M	Y	51.5	70.0	87.6	0.82	23.5	1LE1592-1DB22-1 ■■■
	12.6			Y	61.4	67.0	88.5	0.82	23	
		17		Δ	88.3	62.0	88.5	0.78	37.5	
15			160 L	Y	51.4	95.0	88.7	0.82	31.5	1LE1592-1DB42-1 ■■■
	17.3			Y	61.4	92.0	90.5	0.82	30.5	
		23.5		Δ	88.2	86.0	90.5	0.77	51	
18.5			180 M	Y	51.1	118	89.3	0.85	37	1LE1592-1EB22-1 ■■■
	21.3			Y	61.1	113	91.0	0.85	36	
		31		Δ	88.1	113	91.0	0.84	62	
22			180 L	Y	51.1	140	89.9	0.83	45	1LE1592-1EB42-1 ■■■
	25.3			Y	61.1	134	91.0	0.84	43.5	
		36.5		Δ	88.0	134	91.0	0.82	74	
30			200 L	Y	50.9	191	90.7	0.83	60	1LE1592-2AB52-1 ■■■
	34.5			Y	60.9	183	92.4	0.84	58	
		48		Δ	87.8	176	92.4	0.81	97	
37			225 S	Y	50.9	235	91.4	0.85	72	1LE1592-2BB02-1 ■■■
	42.5			Y	60.9	225	92.4	0.86	70	
45			225 M	Y	50.9	285	92.4	0.88	84	1LE1592-2BB22-1 ■■■
	52			Y	60.9	276	93.0	0.88	83	
55			250 M	Y	50.8	350	92.3	0.86	105	1LE1592-2CB22-1 ■■■
	63			Y	60.8	334	93.0	0.86	103	
75			280 S	Y	50.6	475	92.7	0.86	143	1LE1592-2DB02-1 ■■■
	86			Y	60.6	456	93.2	0.87	139	
90			280 M	Y	50.6	570	93.0	0.87	169	1LE1592-2DB22-1 ■■■
	104			Y	60.6	552	93.2	0.87	168	
106			315 S	Y	50.4	670	94.0	0.84	205	1LE1592-3AB02-1 ■■■
	125			Y	60.4	663	94.2	0.85	205	
130			315 M	Y	50.4	830	94.4	0.84	250	1LE1592-3AB22-1 ■■■
	152			Y	60.4	806	94.8	0.85	250	
160			315 L	Y	50.4	1020	95.0	0.87	295	1LE1592-3AB42-1 ■■■
	184			Y	60.4	976	95.0	0.87	290	
200			315 L	Y	50.5	1270	95.5	0.89	360	1LE1592-3AB52-1 ■■■
	230			Y	60.5	1220	95.0	0.89	355	
For versions, see Article No. supplements and special versions.										■■■

All technical specifications refer to converter operation.

© Innomotics 2024

Standard induction motors optimized for converter operation – VSD10 line

Cast-iron series Innomotics SD 1LE1592, line voltage 400 V, 50 Hz/460 V, 60 Hz/400 V, 87 Hz – self-ventilated

Motor type	$m_{IM\ B3}$ kg	J kgm²	L_{pfA}, tolerance +3 dB(A) load dB(A)	L_{WA}, tolerance +3 dB(A) load dB(A)	Mech. speed limit rpm	Terminal box	**Preferred SINAMICS G120 – PM240(-2)** Other SINAMICS converters also possible Operating mode: Low overload Type [1]	Frame size	IES class acc. to EN 50598-2
1LE1592-1AB42-1...	29	0.0059	79.0	91.0	4200	TB1F01	6SL3210-1PE16-1.L1	FSA	IES 1
		0.0059	79.0	91.0	4200		6SL3210-1PE16-1.L1	FSA	IES 1
		0.0059	81.0	93.0	4200		6SL3210-1PE21-1.L0	FSB	IES 1
1LE1592-1AB52-1...	33	0.0078	79.0	91.0	4200	TB1F01	6SL3210-1PE18-0.L1	FSA	IES 1
		0.0078	79.0	91.0	4200		6SL3210-1PE18-0.L1	FSA	IES 1
		0.0078	81.0	93.0	4200		6SL3210-1PE21-4.L0	FSB	IES 1
1LE1592-1BB22-1...	38	0.01	77.0	89.0	4200	TB1F01	6SL3210-1PE21-1.L0	FSB	IES 1
		0.01	77.0	89.0	4200		6SL3210-1PE21-1.L0	FSB	IES 1
		0.01	78.4	90.4	4200		6SL3210-1PE21-8.L0	FSB	IES 1
1LE1592-1CB02-1...	60	0.019	76.0	88.0	4200	TB1H01	6SL3210-1PE21-4.L0	FSB	IES 1
		0.019	76.0	88.0	4200		6SL3210-1PE21-4.L0	FSB	IES 1
		0.019	83.0	95.0	4200		6SL3210-1PE22-7.L0	FSC	IES 1
1LE1592-1CB22-1...	62	0.024	76.0	88.0	4200	TB1H01	6SL3210-1PE21-8.L0	FSB	IES 1
		0.024	76.0	88.0	4200		6SL3210-1PE21-8.L0	FSB	IES 1
		0.024	83.0	95.0	4200		6SL3210-1PE23-3.L0	FSC	IES 1
1LE1592-1DB22-1...	89	0.044	84.0	96.0	4200	TB1J01	6SL3210-1PE22-7.L0	FSC	IES 1
		0.044	82.0	94.0	4200		6SL3210-1PE22-7.L0	FSC	IES 1
		0.044	85.8	97.8	4200		6SL3210-1PE24-5.L0	FSD	IES 1
1LE1592-1DB42-1...	100	0.056	84.0	96.0	4200	TB1J01	6SL3210-1PE23-3.L0	FSC	IES 2
		0.056	82.0	94.0	4200		6SL3210-1PE23-3.L0	FSC	IES 2
		0.056	85.8	97.8	4200		6SL3210-1PE26-0.L0	FSD	IES 2
1LE1592-1EB22-1...	168	0.13	71.0	83.0	4200	TB1J01	6SL3210-1PE23-8.L0	FSD	IES 2
		0.13	73.0	85.0	4200		6SL3210-1PE23-8.L0	FSD	IES 2
		0.13	84.0	96.0	4200		6SL3210-1PE27-5.L0	FSD	IES 2
1LE1592-1EB42-1...	168	0.13	71.0	83.0	4200	TB1J01	6SL3210-1PE24-5.L0	FSD	IES 2
		0.13	73.0	85.0	4200		6SL3210-1PE24-5.L0	FSD	IES 2
		0.13	84.0	96.0	4200		6SL3210-1PE28-8.L0	FSE	IES 2
1LE1592-2AB52-1...	220	0.2	76.0	88.0	4200	TB1L01	6SL3210-1PE26-0.L0	FSD	IES 2
		0.2	78.0	80.0	4200		6SL3210-1PE26-0.L0	FSD	IES 2
		0.2	83.1	95.1	4200		6SL3210-1PE31-1.L0	FSE	IES 2
1LE1592-2BB02-1...	260	0.37	67.0	83.0	4500	TB1L01	6SL3210-1PE27-5.L0	FSD	IES 2
		0.37	70.0	86.0	4500		6SL3210-1PE27-5.L0	FSD	IES 2
1LE1592-2BB22-1...	290	0.45	70.0	83.0	4500	TB1L01	6SL3210-1PE28-8.L0	FSE	IES 2
		0.45	72.0	86.0	4500		6SL3210-1PE28-8.L0	FSE	IES 2
1LE1592-2CB22-1...	360	0.69	70.0	83.0	3700	TB1N01	6SL3210-1PE31-1.L0	FSE	IES 2
		0.69	72.0	86.0	3700		6SL3210-1PE31-1.L0	FSE	IES 2
1LE1592-2DB02-1...	540	1.2	75.0	90.0	3000	TB1N01	6SL3210-1PE31-5.L0	FSF	IES 2
		1.2	76.0	91.0	3000		6SL3210-1PE31-5.L0	FSF	IES 2
1LE1592-2DB22-1...	580	1.4	75.0	90.0	3000	TB1N01	6SL3210-1PE31-8.L0	FSF	IES 2
		1.4	76.0	91.0	3000		6SL3210-1PE31-8.L0	FSF	IES 2
1LE1592-3AB02-1...	730	1.9	79.0	94.0	2600	TB1Q01	6SL3210-1PE32-1.L0	FSF	IES 2
		1.9	82.0	96.0	2600		6SL3210-1PE32-1.L0	FSF	IES 2
1LE1592-3AB22-1...	760	2.2	79.0	94.0	2600	TB1Q01	6SL3210-1PE32-5.L0	FSF	IES 2
		2.2	82.0	96.0	2600		6SL3210-1PE32-5.L0	FSF	IES 2
1LE1592-3AB42-1...	940	2.8	79.0	94.0	2600	TB1Q01	6SL3224-0XE41-3.A0	FSGX	IES 2
		2.8	80.0	95.0	2600		6SL3224-0XE41-3.A0	FSGX	IES 2
1LE1592-3AB52-1...	1140	3.5	81.0	96.0	2600	TB1Q01	6SL3224-0XE41-6.A0	FSGX	IES 2
		3.5	82.0	96.0	2600		6SL3224-0XE41-6.A0	FSGX	IES 2

[1] In addition to the Power Module, a Control Unit and an Operator Panel are required (see Catalog D 31 and/or D 35).

© Innomotics 2024

Standard induction motors optimized for converter operation – VSD10 line

Cast-iron series Innomotics SD 1LE1592, line voltage 500 V, 50 Hz/575 V, 60 Hz/500 V, 87 Hz – self-ventilated

Selection and ordering data

$P_{rated, 50 Hz, 500 V}$	$P_{rated, 60 Hz, 575 V}$	$P_{rated, 87 Hz, 500 V}$	Frame size	Connection	Operating values at rated power f_{rated}	T_{rated}	$\eta_{rated, 4/4}$ for converter operation	$\cos\varphi_{rated, 4/4}$	I_{rated}	1LE1592 cast-iron series Version specifically for converter operation
kW	kW	kW			Hz	Nm	%		A	Article No.
_ Insulation: Thermal class 155 (temperature class F), IP55 degree of protection, utilization in accordance with thermal class 155 (temperature class F)										
_ Operation with a SINAMICS G converter with uncontrolled infeed – rated motor voltage 480 V, 50 Hz/550 V, 60 Hz/480 V, 87 Hz										
3000 rpm	**3600 rpm**	**5220 rpm**	**2-pole**							
3			**100 L**	Y	52.9	9.5	81.5	0.87	5.1	**1LE1592-1AA42-6** ■■■
	3.45			Y	63.0	9.2	84.5	0.88	4.85	
		5		Δ	89.6	9.1	84.5	0.85	8.4	
4			**112 M**	Y	51.3	12.7	83.1	0.86	6.7	**1LE1592-1BA22-6** ■■■
	4.55			Y	61.3	12.1	84.5	0.88	6.4	
		6.6		Δ	88.2	12.1	84.5	0.84	11.1	
5.5			**132 S**	Y	51.6	17.5	84.7	0.89	8.8	**1LE1592-1CA02-6** ■■■
	6.3			Y	61.6	16.7	86.0	0.90	8.5	
7.5			**132 S**	Y	51.2	24.0	86.0	0.87	12.1	**1LE1592-1CA12-6** ■■■
	8.6			Y	61.2	22.8	87.5	0.88	11.7	
11			**160 M**	Y	51.3	35.0	87.6	0.85	17.8	**1LE1592-1DA22-6** ■■■
	12.6			Y	61.3	33.4	87.5	0.86	17.6	
14			**160 M**	Y	51.1	44.5	88.7	0.84	22.5	**1LE1592-1DA32-6** ■■■
	16.5			Y	61.2	43.8	89.5	0.86	22.5	
17			**160 L**	Y	51.1	54.0	89.3	0.85	27	**1LE1592-1DA42-6** ■■■
	19.5			Y	61.1	51.7	89.5	0.86	26.5	
22			**180 M**	Y	50.9	70	89.9	0.87	34	**1LE1592-1EA22-6** ■■■
	24.5			Y	60.9	65	89.5	0.87	33	
30			**200 L**	Y	50.8	95	90.7	0.82	48.5	**1LE1592-2AA42-6** ■■■
	33.5			Y	60.8	89	91.5	0.82	47	
34			**200 L**	Y	50.7	108	91.2	0.87	52	**1LE1592-2AA52-6** ■■■
	40			Y	60.8	106	91.7	0.89	51	
41			**225 M**	Y	50.6	131	91.7	0.88	61	**1LE1592-2BA22-6** ■■■
	48			Y	60.7	127	91.7	0.88	62	
53			**250 M**	Y	50.5	169	92.1	0.88	79	**1LE1592-2CA22-6** ■■■
	60			Y	60.5	159	92.4	0.88	77	
75			**280 S**	Y	50.5	240	92.7	0.87	112	**1LE1592-2DA02-6** ■■■
	84			Y	60.5	223	93.0	0.87	109	
90			**280 M**	Y	50.4	285	93.0	0.88	132	**1LE1592-2DA22-6** ■■■
	101			Y	60.4	268	93.0	0.88	130	
For versions, see Article No. supplements and special versions.										■■■

All technical specifications refer to converter operation.

© Innomotics 2024

Standard induction motors optimized for converter operation – VSD10 line

Cast-iron series Innomotics SD 1LE1592, line voltage 500 V, 50 Hz/575 V, 60 Hz/500 V, 87 Hz – self-ventilated

Motor type	$m_{IM\ B3}$ kg	J kgm²	L_{pfA}, tolerance +3 dB(A) load dB(A)	L_{WA}, tolerance +3 dB(A) load dB(A)	Mech. speed limit rpm	Terminal box	**Preferred SINAMICS G120 – PM240(-2)** Other SINAMICS converters also possible Operating mode: Low overload Type [1]	Frame size	IES class acc. to EN 50598-2
1LE1592-1AA42-6...	31	0.0034	80.0	92.0	5500	TB1F01			
		0.0034	80.0	92.0	5500				
		0.0034	85.0	97.1	5500				
1LE1592-1BA22-6...	36	0.0067	79.0	91.0	5500	TB1F01			
		0.0067	79.0	91.0	5500				
		0.0067	85.0	97.2	5500		6SL3210-1PH21-4.L0	FSD	
1LE1592-1CA02-6...	53	0.013	77.0	89.0	4500	TB1H01	6SL3210-1PH21-4.L0	FSD	
		0.013	77.0	89.0	4500		6SL3210-1PH21-4.L0	FSD	
1LE1592-1CA12-6...	58	0.016	77.0	89.0	4500	TB1H01	6SL3210-1PH21-4.L0	FSD	
		0.016	77.0	89.0	4500		6SL3210-1PH21-4.L0	FSD	
1LE1592-1DA22-6...	87	0.03	80.0	92.0	4500	TB1J01	6SL3210-1PH22-0.L0	FSD	
		0.03	80.0	92.0	4500		6SL3210-1PH22-0.L0	FSD	
1LE1592-1DA32-6...	95	0.036	80.0	93.0	4500	TB1J01	6SL3210-1PH22-3.L0	FSD	
		0.036	80.0	93.0	4500		6SL3210-1PH22-3.L0	FSD	
1LE1592-1DA42-6...	105	0.044	80.0	93.0	4500	TB1J01	6SL3210-1PH22-7.L0	FSD	
		0.044	80.0	93.0	4500		6SL3210-1PH22-7.L0	FSD	
1LE1592-1EA22-6...	145	0.069	80.0	93.0	4500	TB1J01	6SL3210-1PH23-5.L0	FSD	
		0.069	80.0	93.0	4500		6SL3210-1PH23-5.L0	FSD	
1LE1592-2AA42-6...	191	0.124	79.0	92.0	4500	TB1L01	6SL3210-1PH25-2.L0	FSE	
		0.124	79.0	92.0	4500		6SL3210-1PH25-2.L0	FSE	
1LE1592-2AA52-6...	223	0.15	77.0	90.0	4500	TB1L01	6SL3210-1PH25-2.L0	FSE	
		0.15	77.0	90.0	4500		6SL3210-1PH25-2.L0	FSE	
1LE1592-2BA22-6...	280	0.22	78.0	90.0	4500	TB1L01	6SL3210-1PH26-2.L0	FSE	
		0.22	80.0	93.0	4500		6SL3210-1PH26-2.L0	FSE	
1LE1592-2CA22-6...	360	0.4	78.0	92.0	3900	TB1N01	6SL3210-1PH28-0.L0	FSF	
		0.4	82.0	96.0	3900		6SL3210-1PH28-0.L0	FSF	
1LE1592-2DA02-6...	470	0.72	78.0	92.0	3600	TB1N01	6SL3210-1PH31-2.L0	FSF	
		0.72	82.0	96.0	3600		6SL3210-1PH31-2.L0	FSF	
1LE1592-2DA22-6...	530	0.83	78.0	92.0	3600	TB1N01	6SL3210-1PH31-4.L0	FSF	
		0.83	82.0	96.0	3600		6SL3210-1PH31-4.L0	FSF	

[1] In addition to the Power Module, a Control Unit and an Operator Panel are required (see Catalog D 31 and/or D 35).

© Innomotics 2024

Standard induction motors optimized for converter operation – VSD10 line

Cast-iron series Innomotics SD 1LE1592, line voltage 500 V, 50 Hz/575 V, 60 Hz/500 V, 87 Hz – self-ventilated

Selection and ordering data

$P_{rated, 50 Hz, 500 V}$	$P_{rated, 60 Hz, 575 V}$	$P_{rated, 87 Hz, 500 V}$	Frame size	Connection	Operating values at rated power f_{rated}	T_{rated}	$\eta_{rated, 4/4}$ for converter operation	$\cos\varphi_{rated, 4/4}$	I_{rated}	1LE1592 cast-iron series Version specifically for converter operation
kW	kW	kW			Hz	Nm	%		A	Article No.
_ Insulation: Thermal class 155 (temperature class F), IP55 degree of protection, utilization in accordance with thermal class 155 (temperature class F)										
_ Operation with a SINAMICS G converter with uncontrolled infeed – rated motor voltage 480 V, 50 Hz/550 V, 60 Hz/480 V, 87 Hz										
1500 rpm	1800 rpm	2610 rpm	4-pole							
2.2			100 L	Y	52.8	14.0	79.7	0.81	4.1	1LE1592-1AB42-6 ■■■
	2.55			Y	62.8	13.5	83.0	0.82	3.95	
		4		Δ	89.6	13.5	83.0	0.79	6.8	
3			100 L	Y	52.6	19.1	81.5	0.85	5.2	1LE1592-1AB52-6 ■■■
	3.45			Y	62.6	18.3	85.0	0.86	4.95	
		5		Δ	89.3	18.3	85.0	0.79	8.7	
4			112 M	Y	52.4	25.5	83.1	0.85	6.8	1LE1592-1BB22-6 ■■■
	4.55			Y	62.3	24.1	85.0	0.85	6.6	
		7		Δ	89.1	24.0	85.0	0.81	12	
5.5			132 S	Y	52.0	35.0	84.7	0.82	9.5	1LE1592-1CB02-6 ■■■
	6.3			Y	62.0	33.4	87.0	0.84	9	
		9		Δ	88.8	33.0	87.0	0.81	15.4	
7.5			132 M	Y	51.9	47.5	86.0	0.82	12.8	1LE1592-1CB22-6 ■■■
	8.6			Y	61.9	45.6	87.5	0.84	12.3	
		13		Δ	88.7	45.5	87.5	0.80	21.5	
11			160 M	Y	51.5	70.0	87.6	0.82	18.4	1LE1592-1DB22-6 ■■■
	12.6			Y	61.5	66.9	88.5	0.82	18.2	
		17		Δ	88.4	62.0	88.5	0.78	29.5	
13.5			160 L	Y	51.2	86.0	88.7	0.79	23	1LE1592-1DB42-6 ■■■
	15.6			Y	61.2	82.8	90.5	0.81	22.5	
		24		Δ	88.3	86.0	90.5	0.77	40.5	
16.7			180 M	Y	51.0	106	89.3	0.84	27	1LE1592-1EB22-6 ■■■
	19.2			Y	61.0	102	91.0	0.84	26.5	
		31		Δ	88.0	113	91.0	0.84	49	
21.5			180 L	Y	51.1	137	89.9	0.83	34.5	1LE1592-1EB42-6 ■■■
	25.3			Y	61.2	134	91.0	0.84	34.5	
		37		Δ	88.1	134	91.0	0.82	59	
30			200 L	Y	51.0	191	90.7	0.83	48	1LE1592-2AB52-6 ■■■
	34.5			Y	61.0	183	92.4	0.84	46.5	
		48		Δ	87.9	176	92.4	0.81	77	
33			225 S	Y	50.6	210	92.0	0.84	51	1LE1592-2BB02-6 ■■■
	38			Y	60.6	202	92.4	0.84	51	
41			225 M	Y	50.7	260	92.4	0.87	61	1LE1592-2BB22-6 ■■■
	47			Y	60.7	249	93.0	0.87	61	
52			250 M	Y	50.7	330	92.3	0.85	80	1LE1592-2CB22-6 ■■■
	59			Y	60.7	313	93.0	0.85	78	
75			280 S	Y	50.5	475	92.7	0.85	114	1LE1592-2DB02-6 ■■■
	86			Y	60.5	456	93.2	0.86	113	
90			280 M	Y	50.6	570	93.0	0.87	134	1LE1592-2DB22-6 ■■■
	102			Y	60.6	541	93.2	0.87	132	
110			315 S	Y	50.4	700	94.0	0.84	168	1LE1592-3AB02-6 ■■■
	127			Y	60.4	674	94.2	0.84	168	
132			315 M	Y	50.4	840	94.4	0.85	198	1LE1592-3AB22-6 ■■■
	152			Y	60.4	806	94.8	0.85	198	
160			315 L	Y	50.3	1020	95.0	0.86	235	1LE1592-3AB42-6 ■■■
	184			Y	60.3	976	95.0	0.86	235	
200			315 L	Y	50.4	1270	95.0	0.88	290	1LE1592-3AB52-6 ■■■
	230			Y	60.4	1220	95.0	0.88	290	
For versions, see Article No. supplements and special versions.										■■■

All technical specifications refer to converter operation.

© Innomotics 2024

Standard induction motors optimized for converter operation – VSD10 line

Cast-iron series Innomotics SD 1LE1592, line voltage 500 V, 50 Hz/575 V, 60 Hz/500 V, 87 Hz – self-ventilated

Motor type	$m_{IM\ B3}$ kg	J kgm²	L_{pfA}, tolerance +3 dB(A) load dB(A)	L_{WA}, tolerance +3 dB(A) load dB(A)	Mech. speed limit rpm	Terminal box	**Preferred SINAMICS G120 – PM240(-2)** Other SINAMICS converters also possible Operating mode: Low overload Type [1]	Frame size	IES class acc. to EN 50598-2
1LE1592-1AB42-6...	29	0.0059	80.0	92.0	4200	TB1F01			
		0.0059	80.0	92.0	4200				
		0.0059	81.0	93.1	4200				
1LE1592-1AB52-6...	33	0.0078	80.0	92.0	4200	TB1F01			
		0.0078	80.0	92.0	4200				
		0.0078	81.0	93.1	4200				
1LE1592-1BB22-6...	38	0.01	79.0	91.0	4200	TB1F01			
		0.01	79.0	91.0	4200				
		0.01	80.0	92.3	4200		6SL3210-1PH21-4.L0	FSD	
1LE1592-1CB02-6...	60	0.019	77.0	89.0	4200	TB1H01	6SL3210-1PH21-4.L0	FSD	
		0.019	77.0	89.0	4200		6SL3210-1PH21-4.L0	FSD	
		0.019	83.0	95.4	4200		6SL3210-1PH22-0.L0	FSD	
1LE1592-1CB22-6...	62	0.024	77.0	89.0	4200	TB1H01	6SL3210-1PH21-4.L0	FSD	
		0.024	77.0	89.0	4200		6SL3210-1PH21-4.L0	FSD	
		0.024	83.0	95.4	4200		6SL3210-1PH22-3.L0	FSD	
1LE1592-1DB22-6...	89	0.044	85.0	98.0	4200	TB1J01	6SL3210-1PH22-0.L0	FSD	
		0.044	85.0	98.0	4200		6SL3210-1PH22-0.L0	FSD	
		0.044	85.0	97.8	4200		6SL3210-1PH23-5.L0	FSD	
1LE1592-1DB42-6...	100	0.056	85.0	98.0	4200	TB1J01	6SL3210-1PH22-3.L0	FSD	
		0.056	85.0	98.0	4200		6SL3210-1PH22-3.L0	FSD	
		0.056	85.0	97.8	4200		6SL3210-1PH24-2.L0	FSD	
1LE1592-1EB22-6...	168	0.13	72.0	85.0	4200	TB1J01	6SL3210-1PH22-7.L0	FSD	
		0.13	72.0	85.0	4200		6SL3210-1PH22-7.L0	FSD	
		0.13	84.0	97.0	4200		6SL3210-1PH25-2.L0	FSE	
1LE1592-1EB42-6...	168	0.13	72.0	85.0	4200	TB1J01	6SL3210-1PH23-5.L0	FSD	
		0.13	72.0	85.0	4200		6SL3210-1PH23-5.L0	FSD	
		0.13	84.0	97.0	4200		6SL3210-1PH26-2.L0	FSE	
1LE1592-2AB52-6...	220	0.2	78.0	91.0	4200	TB1L01	6SL3210-1PH25-2.L0	FSE	
		0.2	78.0	91.0	4200		6SL3210-1PH25-2.L0	FSE	
		0.2	84.0	97.3	4200		6SL3210-1PH31-0.L0	FSF	
1LE1592-2BB02-6...	260	0.37	70.0	84.0	4500	TB1L01	6SL3210-1PH25-2.L0	FSE	
		0.37	70.0	84.0	4500		6SL3210-1PH25-2.L0	FSE	
1LE1592-2BB22-6...	290	0.45	71.0	84.0	4500	TB1L01	6SL3210-1PH26-2.L0	FSE	
		0.45	71.0	84.0	4500		6SL3210-1PH26-2.L0	FSE	
1LE1592-2CB22-6...	360	0.69	71.0	84.0	3700	TB1N01	6SL3210-1PH28-0.L0	FSF	
		0.69	71.0	84.0	3700		6SL3210-1PH28-0.L0	FSF	
1LE1592-2DB02-6...	540	1.2	76.0	91.0	3000	TB1N01	6SL3210-1PH31-2.L0	FSF	
		1.2	76.0	91.0	3000		6SL3210-1PH31-2.L0	FSF	
1LE1592-2DB22-6...	580	1.4	76.0	91.0	3000	TB1N01	6SL3210-1PH31-4.L0	FSF	
		1.4	76.0	91.0	3000		6SL3210-1PH31-4.L0	FSF	
1LE1592-3AB02-6...	730	1.9	80.0	95.0	2600	TB1Q01	6SL3710-1GF31-8.A3	–	
		1.9	80.0	95.0	2600		6SL3710-1GF31-8.A3	–	
1LE1592-3AB22-6...	760	2.2	80.0	95.0	2600	TB1Q01	6SL3710-1GF32-2.A3	–	
		2.2	80.0	95.0	2600		6SL3710-1GF32-2.A3	–	
1LE1592-3AB42-6...	940	2.9	80.0	95.0	2600	TB1Q01	6SL3710-1GF32-6.A3	–	
		2.8	80.0	95.0	2600		6SL3710-1GF32-6.A3	–	
1LE1592-3AB52-6...	1140	3.5	82.0	96.0	2600	TB1Q01	6SL3710-1GF33-3.A3	–	
		3.5	82.0	96.0	2600		6SL3710-1GF33-3.A3	–	

[1] In addition to the Power Module, a Control Unit and an Operator Panel are required (see Catalog D 31 and/or D 35).

© Innomotics 2024

Standard induction motors optimized for converter operation – VSD10 line

Cast-iron series Innomotics SD 1LE1592, line voltage 690 V, 50 Hz/690 V, 87 Hz – self-ventilated

Selection and ordering data

$P_{rated, 50 Hz, 690 V}$	$P_{rated, 60 Hz}$	$P_{rated, 87 Hz, 690 V}$	Frame size	Connection	Operating values at rated power f_{rated}	T_{rated}	$\eta_{rated, 4/4}$ for converter operation	$\cos\varphi_{rated, 4/4}$	I_{rated}	1LE1592 cast-iron series Version specifically for converter operation	
kW	kW	kW			Hz	Nm	%		A	Article No.	
_ Insulation: Thermal class 155 (temperature class F), IP55 degree of protection, utilization in accordance with thermal class 155 (temperature class F)											
_ Operation with a SINAMICS G converter with uncontrolled infeed – rated motor voltage 660 V, 50 Hz/660 V, 87 Hz											
3000 rpm	**3600 rpm**	**5220 rpm**	**2-pole**								
3			**100 L**	Y	52.7	9.6	81.5	0.87	3.7	**1LE1592-1AA43-3**	■■■
		5		Δ	89.5	9.1	84.5	0.81	6.4		
4			**112 M**	Y	51.2	12.7	83.1	0.86	4.9	**1LE1592-1BA23-3**	■■■
		6.6		Δ	88.2	12.1	84.5	0.83	8.2		
5.5			**132 S**	Y	51.6	17.5	84.7	0.89	6.4	**1LE1592-1CA03-3**	■■■
7.5			**132 S**	Y	51.2	23.9	86.0	0.87	8.8	**1LE1592-1CA13-3**	■■■
11			**160 M**	Y	51.3	35.0	87.6	0.85	12.9	**1LE1592-1DA23-3**	■■■
15			**160 M**	Y	51.4	47.8	88.7	0.84	17.6	**1LE1592-1DA33-3**	■■■
18.5			**160 L**	Y	51.3	58.9	89.3	0.86	20.5	**1LE1592-1DA43-3**	■■■
22			**180 M**	Y	51.0	70	89.9	0.87	24.5	**1LE1592-1EA23-3**	■■■
30			**200 L**	Y	50.9	96	90.7	0.84	34.5	**1LE1592-2AA43-3**	■■■
37			**200 L**	Y	50.9	118	91.2	0.88	40.5	**1LE1592-2AA53-3**	■■■
45			**225 M**	Y	50.7	143	91.7	0.88	49	**1LE1592-2BA23-3**	■■■
55			**250 M**	Y	50.6	175	92.1	0.88	59	**1LE1592-2CA23-3**	■■■
75			**280 S**	Y	50.5	239	92.7	0.88	80	**1LE1592-2DA03-3**	■■■
90			**280 M**	Y	50.4	286	93.0	0.88	96	**1LE1592-2DA23-3**	■■■
1500 rpm	**1800 rpm**	**2610 rpm**	**4-pole**								
2.2			**100 L**	Y	52.9	14.0	79.7	0.81	3	**1LE1592-1AB43-3**	■■■
		3.7		Δ	89.5	13.5	83.0	0.79	4.95		
3			**100 L**	Y	52.5	19.1	81.5	0.85	3.8	**1LE1592-1AB53-3**	■■■
		5		Δ	89.5	18.3	85.0	0.79	6.5		
4			**112 M**	Y	52.5	25.5	83.1	0.85	5	**1LE1592-1BB23-3**	■■■
		6.6		Δ	89.2	24.0	85.0	0.81	8.4		
5.5			**132 S**	Y	52.0	35.0	84.7	0.82	6.9	**1LE1592-1CB03-3**	■■■
		9		Δ	88.7	33.0	87.0	0.81	11.2		
7.5			**132 M**	Y	51.7	47.8	86.0	0.82	9.3	**1LE1592-1CB23-3**	■■■
		12.5		Δ	88.6	45.5	87.5	0.80	15.6		
11			**160 M**	Y	51.5	70.0	87.6	0.82	13.4	**1LE1592-1DB23-3**	■■■
		17		Δ	88.3	62.0	88.5	0.78	21.5		
15			**160 L**	Y	51.4	95.5	88.7	0.82	18	**1LE1592-1DB43-3**	■■■
		23.5		Δ	88.2	86.0	90.5	0.77	29.5		
18.5			**180 M**	Y	51.1	118	89.3	0.85	21.5	**1LE1592-1EB23-3**	■■■
		31		Δ	88.0	112	91.0	0.84	35		
22			**180 L**	Y	51.2	140	89.9	0.85	25	**1LE1592-1EB43-3**	■■■
		36.5		Δ	88.2	134	91.0	0.84	42		
30			**200 L**	Y	51.0	191	90.7	0.83	35	**1LE1592-2AB53-3**	■■■
		48		Δ	87.9	176	92.4	0.81	56		
37			**225 S**	Y	50.8	235	91.4	0.85	41.5	**1LE1592-2BB03-3**	■■■
45			**225 M**	Y	50.8	285	92.4	0.88	48.5	**1LE1592-2BB23-3**	■■■
55			**250 M**	Y	50.8	350	92.3	0.86	61	**1LE1592-2CB23-3**	■■■
72			**280 S**	Y	50.5	460	92.7	0.85	80	**1LE1592-2DB03-3**	■■■
90			**280 M**	Y	50.6	570	93.0	0.87	97	**1LE1592-2DB23-3**	■■■
105			**315 S**	Y	50.4	670	94.0	0.85	115	**1LE1592-3AB03-3**	■■■
130			**315 M**	Y	50.4	830	94.4	0.85	142	**1LE1592-3AB23-3**	■■■
160			**315 L**	Y	50.3	1020	95.0	0.87	169	**1LE1592-3AB43-3**	■■■
200			**315 L**	Y	50.4	1270	95.0	0.89	205	**1LE1592-3AB53-3**	■■■
For versions, see Article No. supplements and special versions.											■■■

All technical specifications refer to converter operation.

© Innomotics 2024

Standard induction motors optimized for converter operation – VSD10 line

Cast-iron series Innomotics SD 1LE1592, line voltage 690 V, 50 Hz/690 V, 87 Hz – self-ventilated

Motor type	$m_{IM\ B3}$ kg	J kgm²	L_{pfA}, tolerance +3 dB(A) load dB(A)	L_{WA}, tolerance +3 dB(A) load dB(A)	Mech. speed limit rpm	Terminal box	**Preferred SINAMICS G120 – PM240(-2)** Other SINAMICS converters also possible Operating mode: Low overload Type [1]	Frame size	IES class acc. to EN 50598-2
[redacted]									
[redacted]									
1LE1592-1AA43-3...	31	0.0034	80.0	92.0	5500	TB1F01			
		0.0034	85.0	97.1	5500				
1LE1592-1BA23-3...	36	0.0067	79.0	91.0	5500	TB1F01			
		0.0067	85.0	97.2	5500		6SL3210-1PH21-4.L0	FSD	
1LE1592-1CA03-3...	53	0.013	77.0	89.0	4500	TB1H01	6SL3210-1PH21-4.L0	FSD	
1LE1592-1CA13-3...	58	0.016	77.0	89.0	4500	TB1H01	6SL3210-1PH21-4.L0	FSD	
1LE1592-1DA23-3...	87	0.03	80.0	92.0	4500	TB1J01	6SL3210-1PH21-4.L0	FSD	
1LE1592-1DA33-3...	95	0.036	80.0	93.0	4500	TB1J01	6SL3210-1PH22-0.L0	FSD	
1LE1592-1DA43-3...	105	0.044	80.0	93.0	4500	TB1J01	6SL3210-1PH22-3.L0	FSD	
1LE1592-1EA23-3...	145	0.069	80.0	93.0	4500	TB1J01	6SL3210-1PH22-7.L0	FSD	
1LE1592-2AA43-3...	191	0.124	79.0	92.0	4500	TB1L01	6SL3210-1PH23-5.L0	FSD	
1LE1592-2AA53-3...	223	0.15	77.0	90.0	4500	TB1L01	6SL3210-1PH24-2.L0	FSD	
1LE1592-2BA23-3...	280	0.22	78.0	90.0	4500	TB1L01	6SL3210-1PH25-2.L0	FSE	
1LE1592-2CA23-3...	360	0.4	78.0	92.0	3900	TB1N01	6SL3210-1PH26-2.L0	FSE	
1LE1592-2DA03-3...	470	0.72	78.0	92.0	3600	TB1N01	6SL3210-1PH28-0.L0	FSF	
1LE1592-2DA23-3...	530	0.83	78.0	92.0	3600	TB1N01	6SL3210-1PH31-0.L0	FSF	
[redacted]									
1LE1592-1AB43-3...	29	0.0059	80.0	92.0	4200	TB1F01			
		0.0059	81.0	93.1	4200				
1LE1592-1AB53-3...	33	0.0078	80.0	92.0	4200	TB1F01			
		0.0078	81.0	93.1	4200				
1LE1592-1BB23-3...	38	0.01	79.0	91.0	4200	TB1F01			
		0.01	80.0	92.3	4200		6SL3210-1PH21-4.L0	FSD	
1LE1592-1CB03-3...	60	0.019	77.0	89.0	4200	TB1H01	6SL3210-1PH21-4.L0	FSD	
		0.019	83.0	95.4	4200		6SL3210-1PH21-4.L0	FSD	
1LE1592-1CB23-3...	62	0.024	77.0	89.0	4200	TB1H01	6SL3210-1PH21-4.L0	FSD	
		0.024	83.0	95.4	4200		6SL3210-1PH22-0.L0	FSD	
1LE1592-1DB23-3...	89	0.044	85.0	98.0	4200	TB1J01	6SL3210-1PH21-4.L0	FSD	
		0.044	85.0	97.8	4200		6SL3210-1PH22-7.L0	FSD	
1LE1592-1DB43-3...	100	0.056	85.0	98.0	4200	TB1J01	6SL3210-1PH22-0.L0	FSD	
		0.056	85.0	97.8	4200		6SL3210-1PH23-5.L0	FSD	
1LE1592-1EB23-3...	168	0.13	72.0	85.0	4200	TB1J01	6SL3210-1PH22-3.L0	FSD	
		0.13	84.0	97.0	4200		6SL3210-1PH24-2.L0	FSD	
1LE1592-1EB43-3...	168	0.13	72.0	85.0	4200	TB1J01	6SL3210-1PH22-7.L0	FSD	
		0.13	84.0	97.0	4200		6SL3210-1PH25-2.L0	FSE	
1LE1592-2AB53-3...	220	0.2	78.0	91.0	4200	TB1L01	6SL3210-1PH23-5.L0	FSD	
		0.2	84.0	97.3	4200		6SL3210-1PH26-2.L0	FSE	
1LE1592-2BB03-3...	260	0.37	70.0	84.0	4500	TB1L01	6SL3210-1PH24-2.L0	FSD	
1LE1592-2BB23-3...	290	0.45	71.0	84.0	4500	TB1L01	6SL3210-1PH25-2.L0	FSE	
1LE1592-2CB23-3...	360	0.69	71.0	84.0	3700	TB1N01	6SL3210-1PH26-2.L0	FSE	
1LE1592-2DB03-3...	540	1.2	76.0	91.0	3000	TB1N01	6SL3210-1PH28-0.L0	FSF	
1LE1592-2DB23-3...	580	1.4	76.0	91.0	3000	TB1N01	6SL3210-1PH31-0.L0	FSF	
1LE1592-3AB03-3...	730	1.9	80.0	95.0	2600	TB1Q01	6SL3710-1GH31-2.A3	–	
1LE1592-3AB23-3...	760	2.2	80.0	95.0	2600	TB1Q01	6SL3710-1GH31-5.A3	–	
1LE1592-3AB43-3...	940	2.8	80.0	95.0	2600	TB1Q01	6SL3710-1GH31-8.A3	–	
1LE1592-3AB53-3...	1140	3.5	82.0	96.0	2600	TB1Q01	6SL3710-1GH32-2.A3	–	

[1] In addition to the Power Module, a Control Unit and an Operator Panel are required (see Catalog D 31 and/or D 35).

© Innomotics 2024

Standard induction motors optimized for converter operation – VSD10 line

Aluminum series Innomotics GP 1LE1092

Selection and ordering data

Voltages	Article No. supplement			Frame size				Motor version
	Voltage code 12th and 13th position of the Article No.		Additional identification code with order code and plain text if required	100	112	132	160	
				1LE1092				Standard Efficiency
1LE1092-.... ■ - ■ ...			Order code					
Voltage at 50 Hz or 60 Hz								
Line voltage: 50 Hz, 400 V 60 Hz, 480 V	2	1	–	☐	☐	☐	☐	
Line voltage: 50 Hz, 690 V	3	3	–	✓	✓	✓	✓	
Non-standard voltage and/or frequencies								
Non-standard winding Reinforced insulation system (Advanced)	9	0	**M1Y** • and customer specifications	✓	✓	✓	✓	
Non-standard winding Special insulation system (Premium)	9	0	**M2Y** • and customer specifications	✓	✓	✓	✓	

☐ Standard version
✓ With additional charge
• This order code only determines the price of the version – Additional plain text is required.

© Innomotics 2024

Standard induction motors optimized for converter operation – VSD10 line

Selection and ordering data

Voltages	Article No. supplement			Frame size										Motor version
	Voltage code 12th and 13th position of the Article No.		Additional identification code with order code and plain text if required	100	112	132	160	180	200	225	250	280	315	
				1LE1592										Standard Efficiency
1LE1592-	■ -	■ ...	Order code											
Voltage at 50 Hz or 60 Hz														
Line voltage: 50 Hz, 400 V 60 Hz, 480 V	2	1	–	☐	☐	☐	☐	☐	☐	☐	☐	☐	☐	
Line voltage: 50 Hz, 500 V 60 Hz, 600 V	2	6	–	✓	✓	✓	✓	✓	✓	✓	✓	✓	✓	
Line voltage: 50 Hz, 690 V	3	3	–	✓	✓	✓	✓	✓	✓	✓	✓	✓	✓	
Non-standard voltage and/or frequencies														
Non-standard winding Reinforced insulation system (Advanced)	9	0	**M1Y** • and customer specifications	✓	✓	✓	✓	✓	✓	✓	✓	✓	✓	
Non-standard winding Special insulation system (Premium)	9	0	**M2Y** • and customer specifications	✓	✓	✓	✓	✓	✓	✓	✓	✓	✓	

☐ Standard version
✓ With additional charge
• This order code only determines the price of the version – Additional plain text is required.

© Innomotics 2024

Standard induction motors optimized for converter operation – VSD10 line

Aluminum series Innomotics GP 1LE1092

Selection and ordering data

Types of construction	Article No. supplement: Type of construction code letter 14th position of the Article No.	Article No. supplement: For types of construction with order code(s) Article No. with additional identification code -Z	Frame size 100	112	132	160	Motor version
			1LE1092				Standard Efficiency
1LE1092- . . . . . - .	■ . . (-Z)	Order code					
Without flange							
IM B3 [1) 2)]	A	–	☐	☐	☐	☐	
IM B6 [2)] 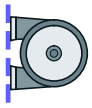	T	–	☐	☐	☐	☐	
IM B7 [2)] 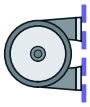	U	–	☐	☐	☐	☐	
IM B8 [2)]	V	–	☐	☐	☐	☐	
IM V6 [2)]	D	–	☐	☐	☐	☐	
IM V5 without protective cover [2)]	C	–	☐	☐	☐	☐	
IM V5 with protective cover [2) 3) 4) 5)] 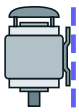	C	H00	✓	✓	✓	✓	
With flange	**Acc. to EN 50347**		**FF215**	**FF215**	**FF265**	**FF300**	
	Acc. to DIN 42948		**A 250**	**A 250**	**A 300**	**A 350**	
IM B5 [2) 6)] 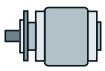	F	–	✓	✓	✓	✓	
IM V1 without protective cover [2)]	G	–	✓	✓	✓	✓	
IM V1 with protective cover [2) 3) 4) 5)]	G	H00	✓	✓	✓	✓	
IM V3 [3)]	H	–	✓	✓	✓	✓	
IM B35 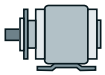	J	–	✓	✓	✓	✓	

For legends and footnotes, see page 5/115.

© Innomotics 2024

Standard induction motors optimized for converter operation – VSD10 line

Aluminum series Innomotics GP 1LE1092

Types of construction	Article No. supplement: Type of construction code letter 14th position of the Article No.	Article No. supplement: For types of construction with order code(s) Article No. with additional identification code -Z	Frame size 100	112	132	160	Motor version
			1LE1092				Standard Efficiency
1LE1092- . . . . . - .	■ . . (-Z)	Order code					
With flange next largest	**Acc. to EN 50347 Acc. to DIN 42948**		**FF265 A 300**	**FF265 A 300**	**FF300 A 350**	**FF350 A 400**	
IM B5 [2) 6)] 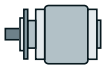	**F**	**P01**	✓	✓	✓	–	
IM V1 without protective cover [2)]	**G**	**P01**	✓	✓	✓	–	
IM V1 with protective cover [2) 3) 4) 5)]	**G**	**P01+H00**	✓	✓	✓	–	
IM V3 [3)]	**H**	**P01**	✓	✓	✓	–	
IM B35 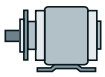	**J**	**P01**	✓	✓	✓	–	
With flange next smallest	**Acc. to EN 50347 Acc. to DIN 42948**		**FF165 A 200**	**FF165 A 200**	**FF215 A 250**	**FF265 A 300**	
IM B5 [2) 6)] 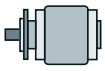	**F**	**P02**	✓	✓	✓	✓	
IM V1 without protective cover [2)]	**G**	**P02**	✓	✓	✓	✓	
IM V1 with protective cover [2) 3) 4) 5)]	**G**	**P02+H00**	✓	✓	✓	✓	
IM V3 [3)]	**H**	**P02**	✓	✓	✓	✓	
IM B35 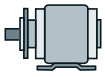	**J**	**P02**	✓	✓	✓	✓	

For legends and footnotes, see page 5/115.

© Innomotics 2024

Standard induction motors optimized for converter operation – VSD10 line

Aluminum series Innomotics GP 1LE1092

Types of construction	Article No. supplement: Type of construction code letter 14th position of the Article No.	Article No. supplement: For types of construction with order code(s) Article No. with additional identification code -Z	Frame size 100	112	132	160	Motor version
			1LE1092				Standard Efficiency
1LE1092- . . . . . - .	■ . . (-Z)	Order code					
With flange	**Acc. to EN 50347**		**FT130**	**FT130**	**FT165**	**–**	
	Acc. to DIN 42948		**C 160**	**C 160**	**C 200**	**–**	
IM B14 2) 7)	**K**	**–**	✓	✓	✓	✓	
IM V19 2) 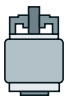	**L**	**–**	✓	✓	✓	✓	
IM V18 without protective cover 2) 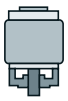	**M**	**–**	✓	✓	✓	✓	
IM V18 with protective cover 2) 3) 4) 5) 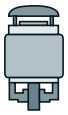	**M**	**–**	✓	✓	✓	✓	
IM B34	**N**	**–**	✓	✓	✓	✓	
With flange next largest	**Acc. to EN 50347**		**FT165**	**FT165**	**FT215**	**–**	
	Acc. to DIN 42948		**C 200**	**C 200**	**C 250**	**–**	
IM B14 2) 7)	**K**	**P01**	✓	✓	✓	–	
IM V19 2) 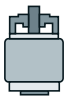	**L**	**P01**	✓	✓	✓	–	
IM V18 without protective cover 2) 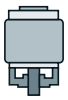	**M**	**P01**	✓	✓	✓	–	
IM V18 with protective cover 2) 3) 4) 5) 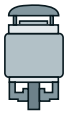	**M**	**P01+H00**	✓	✓	✓	–	
IM B34	**N**	**P01**	✓	✓	✓	–	

5

For legends and footnotes, see page 5/115.

© Innomotics 2024

Standard induction motors optimized for converter operation – VSD10 line

Aluminum series Innomotics GP 1LE1092

Types of construction	Article No. supplement: Type of construction code letter 14th position of the Article No.	Article No. supplement: For types of construction with order code(s) Article No. with additional identification code **-Z**	Frame size 100	112	132	160	Motor version
			1LE1092				Standard Efficiency
1LE1092- . . . . . - . ■ . . (-Z)		Order code					
With flange next smallest	**Acc. to EN 50347**		**FT115**	**FT115**	**FT130**	**–**	
	Acc. to DIN 42948		**C 140**	**C 140**	**C 160**	**–**	
IM B14 [2) 7)]	**K**	**P02**	✓	O. R.	O. R.	–	
IM V19 [2)] 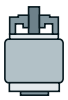	**L**	**P02**	✓	O. R.	O. R.	–	
IM V18 without protective cover [2)]	**M**	**P02**	✓	O. R.	O. R.	–	
IM V18 with protective cover [2) 3) 4) 5)] 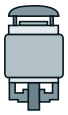	**M**	**P02+H00**	✓	O. R.	O. R.	–	
IM B34	**N**	**P02**	✓	O. R.	O. R.	–	

☐ Standard version
✓ With additional charge
– Not possible
O. R. Possible on request

5

1) The types of construction IM B6/7/8, IM V6 and IM V5 with/without protective cover are also possible as long as there are no condensation drainage holes (order code **H03**) and these types of construction do not have to be stamped on the rating plate. As standard the type of construction IM B3 is then stamped on the rating plate. With type of construction IM V5 with protective cover, the protective cover has to be additionally ordered with order code **H00**. The protective cover is not stamped on the rating plate.

2) The type of construction is stamped on the rating plate. For orders with condensation drainage holes (order code **H03**), if mounted in a different position, the position must be specified to ensure that the condensation drainage holes are positioned correctly.

3) The "Second shaft extension" option (order code **L05**) is not possible.

4) In combination with an encoder, it is not necessary to order the protective cover (order code **H00**), as this is delivered as a protection for the encoder as standard. In this case the protective cover is standard version (without additional charge).

5) Not possible for forced-air cooled motors with order code **F90** without external fan and fan cover.

6) The types of construction IM V3 and IM V1 with/without protective cover are also possible as long as there are no condensation drainage holes (order code **H03**) and these types of construction do not have to be stamped on the rating plate. As standard the type of construction IM B5 is then stamped on the rating plate. With type of construction IM V1 with protective cover, the protective cover has to be additionally ordered with order code **H00**. The protective cover is not stamped on the rating plate.

7) The types of construction IM V19 and IM V18 with/without protective cover are also possible as long as there are no condensation drainage holes (order code **H03**) and these types of construction do not have to be stamped on the rating plate. As standard the type of construction IM B14 is then stamped on the rating plate. With type of construction IM V18 with protective cover, the protective cover has to be additionally ordered with order code **H00**. The protective cover is not stamped on the rating plate.

© Innomotics 2024

Standard induction motors optimized for converter operation – VSD10 line

Cast-iron series Innomotics SD 1LE1592

Selection and ordering data

Types of construction	Article No. supplement: Type of construction code letter 14th position of the Article No.	Article No. supplement: For types of construction with order code(s) Article No. with additional identification code -Z	Frame size 100	112	132	160	180	200	225	250	280	315 S/M	315 L	Motor version
			1LE1592											Standard Efficiency
1LE1592- . . . . . - .	■ . . (-Z)	Order code												
Without flange														
IM B3 [1) 2)]	**A**	–	□	□	□	□	□	□	□	□	□	□	□	
IM B6 [2)] 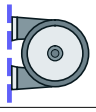	**T**	–	□	□	□	□	□	□	□	□	□	□	□	
IM B7 [2)] 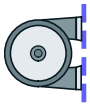	**U**	–	□	□	□	□	□	□	□	□	□	□	□	
IM B8 [2)]	**V**	–	□	□	□	□	□	□	□	□	□	□	□	
IM V6 [2)] 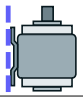	**D**	–	□	□	□	□	□	□	□	□	□	□	□	
IM V5 without protective cover [2)]	**C**	–	□	□	□	□	□	□	□	□	□	□	□	
IM V5 with protective cover [2) 3) 4)]	**C**	**H00**	✓	✓	✓	✓	✓	✓	✓	✓	✓	✓	✓	
With flange	**Acc. to EN 50347**		**FF215**	**FF215**	**FF265**	**FF300**	**FF300**	**FF350**	**FF400**	**FF500**	**FF500**	**FF600**	**–**	
	Acc. to DIN 42948		**A 250**	**A 250**	**A 300**	**A 350**	**A 350**	**A 400**	**A 450**	**A 550**	**A 550**	**A 660**	**A 660**	
IM B5 [2) 5)] 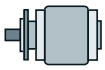	**F**	–	✓	✓	✓	✓	✓	✓	✓	✓	✓	✓	–	
IM V1 without protective cover [2)]	**G**	–	✓	✓	✓	✓	✓	✓	✓	✓	✓	✓	✓	
IM V1 with protective cover [2) 3) 4)]	**G**	**H00**	✓	✓	✓	✓	✓	✓	✓	✓	✓	✓	✓	
IM V3 [4)]	**H**	–	✓	✓	✓	✓	✓	✓	✓	✓	✓	✓	–	
IM B35 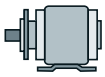	**J**	–	✓	✓	✓	✓	✓	✓	✓	✓	✓	✓	✓	

For legends and footnotes, see page 5/119.

© Innomotics 2024

Standard induction motors optimized for converter operation – VSD10 line

Cast-iron series Innomotics SD 1LE1592

Types of construction	Article No. supplement: Type of construction code letter 14th position of the Article No.	Article No. supplement: For types of construction with order code(s) Article No. with additional identification code -Z	Frame size 100	112	132	160	180	200	225	250	280	315 S/M	315 L	Motor version
			1LE1592											Standard Efficiency
1LE1592- . . . . . - .	■ . . (-Z)	Order code												
With flange next largest	**Acc. to EN 50347**		**FF265**	**FF265**	**FF300**	**–**	**–**	**–**	**–**	**–**	**–**	**–**	**–**	
	Acc. to DIN 42948		**A 300**	**A 300**	**A 350**	**–**	**–**	**–**	**–**	**–**	**–**	**–**	**–**	
IM B5 2) 5) 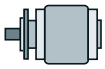	**F**	**P01**	✓	✓	✓	–	–	–	–	–	–	–	–	
IM V1 without protective cover 2)	**G**	**P01**	✓	✓	✓	–	–	–	–	–	–	–	–	
IM V1 with protective cover 2) 3) 4) 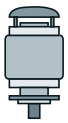	**G**	**P01+H00**	✓	✓	✓	–	–	–	–	–	–	–	–	
IM V3 4)	**H**	**P01**	✓	✓	✓	–	–	–	–	–	–	–	–	
IM B35 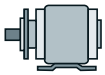	**J**	**P01**	✓	✓	✓	–	–	–	–	–	–	–	–	
With flange next smallest	**Acc. to EN 50347**		**FF165**	**FF215**	**FF215**	**FF265**	**FF265**	**FF300**	**–**	**–**	**–**	**–**	**–**	
	Acc. to DIN 42948		**A 200**	**A 250**	**A 250**	**A 300**	**A 300**	**A 350**	**–**	**–**	**–**	**–**	**–**	
IM B5 2) 5) 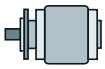	**F**	**P02**	✓	✓	✓	✓	✓	✓	–	–	–	–	–	
IM V1 without protective cover 2) 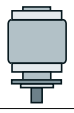	**G**	**P02**	✓	✓	✓	✓	✓	✓	–	–	–	–	–	
IM V1 with protective cover 2) 3) 4)	**G**	**P02+H00**	✓	✓	✓	✓	✓	✓	–	–	–	–	–	
IM V3 4)	**H**	**P02**	✓	✓	✓	✓	✓	✓	–	–	–	–	–	
IM B35 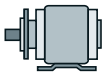	**J**	**P02**	✓	✓	✓	✓	✓	✓	–	–	–	–	–	

For legends and footnotes, see page 5/119.

© Innomotics 2024

Standard induction motors optimized for converter operation – VSD10 line

Cast-iron series Innomotics SD 1LE1592

Types of construction	Article No. supplement: Type of construction code letter 14th position of the Article No.	Article No. supplement: For types of construction with order code(s) Article No. with additional identification code -Z	Frame size 100	112	132	160	180	200	225	250	280	315 S/M	315 L	Motor version
			1LE1592											Standard Efficiency
1LE1592- . . . . . - .	■ . . (-Z)	Order code												
With flange	**Acc. to EN 50347**		**FT130**	**FT130**	**FT165**	**FT215**	**–**	**–**	**–**	**–**	**–**	**–**	**–**	
	Acc. to DIN 42948		**C 160**	**C 160**	**C 200**	**C 250**	**–**	**–**	**–**	**–**	**–**	**–**	**–**	
IM B14 2) 6)	**K**	**–**	✓	✓	✓	✓	–	–	–	–	–	–	–	
IM V19 2) 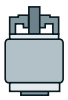	**L**	**–**	✓	✓	✓	✓	–	–	–	–	–	–	–	
IM V18 without protective cover 2) 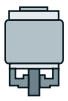	**M**	**–**	✓	✓	✓	✓	–	–	–	–	–	–	–	
IM V18 with protective cover 2) 3) 4) 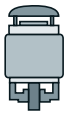	**M**	**H00**	✓	✓	✓	✓	–	–	–	–	–	–	–	
IM B34	**N**	**–**	✓	✓	✓	✓	–	–	–	–	–	–	–	
With flange next largest	**Acc. to EN 50347**		**FT165**	**FT165**	**FT215**	**–**	**–**	**–**	**–**	**–**	**–**	**–**	**–**	
	Acc. to DIN 42948		**C 200**	**C 200**	**C 250**	**–**	**–**	**–**	**–**	**–**	**–**	**–**	**–**	
IM B14 2) 6)	**K**	**P01**	✓	✓	✓	–	–	–	–	–	–	–	–	
IM V19 2) 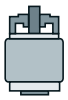	**L**	**P01**	✓	✓	✓	–	–	–	–	–	–	–	–	
IM V18 without protective cover 2) 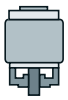	**M**	**P01**	✓	✓	✓	–	–	–	–	–	–	–	–	
IM V18 with protective cover 2) 3) 4) 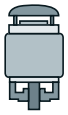	**M**	**P01+H00**	✓	✓	✓	–	–	–	–	–	–	–	–	
IM B34	**N**	**P01**	✓	✓	✓	–	–	–	–	–	–	–	–	

5

For legends and footnotes, see page 5/119.

© Innomotics 2024

Standard induction motors optimized for converter operation – VSD10 line

Cast-iron series Innomotics SD 1LE1592

Types of construction	Article No. supplement: Type of construction code letter 14th position of the Article No.	Article No. supplement: For types of construction with order code(s) Article No. with additional identification code -Z	Frame size 100	112	132	160	180	200	225	250	280	315 S/M	315 L	Motor version
			1LE1592											Standard Efficiency
1LE1592- . . . . . - .	■ . . (-Z)	Order code												
With flange next smallest	**Acc. to EN 50347**		**FT115**	–	–	–	–	–	–	–	–	–	–	
	Acc. to DIN 42948		**C 140**	–	–	–	–	–	–	–	–	–	–	
IM B14 2) 6)	**K**	**P02**	✓	–	–	–	–	–	–	–	–	–	–	
IM V19 2) 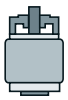	**L**	**P02**	✓	–	–	–	–	–	–	–	–	–	–	
IM V18 without protective cover 2)	**M**	**P02**	✓	–	–	–	–	–	–	–	–	–	–	
IM V18 with protective cover 2) 3) 4) 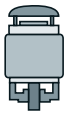	**M**	**P02+H00**	✓	–	–	–	–	–	–	–	–	–	–	
IM B34	**N**	**P02**	✓	–	–	–	–	–	–	–	–	–	–	

☐ Standard version
✓ With additional charge
– Not possible

5

1) The types of construction IM B6/7/8, IM V6 and IM V5 with/without protective cover are also possible as long as no stamping of these types of construction on the rating plate is required. As standard the type of construction IM B3 is then stamped on the rating plate. With type of construction IM V5 with protective cover, the protective cover has to be additionally ordered with order code **H00**. The protective cover is not stamped on the rating plate.

2) The type of construction is stamped on the rating plate. If mounted in a different position, the position must be specified to ensure that the condensation drainage holes are positioned correctly.

3) In combination with an encoder, it is not necessary to order the protective cover (order code **H00**), as this is delivered as a protection for the encoder as standard. In this case the protective cover is standard design (without additional charge).

4) The "Second shaft extension" option (order code **L05**) is not possible.

5) The types of construction IM V3 and IM V1 with/without protective cover are also possible as long as no stamping of these types of construction on the rating plate is required. As standard the type of construction IM B5 is then stamped on the rating plate. With type of construction IM V1 with protective cover, the protective cover has to be additionally ordered with order code **H00**. The protective cover is not stamped on the rating plate.

6) The types of construction IM V19 and IM V18 with/without protective cover are also possible as long as no stamping of these types of construction on the rating plate is required. As standard the type of construction IM B14 is then stamped on the rating plate. With type of construction IM V18 with protective cover, the protective cover has to be additionally ordered with order code **H00**. The protective cover is not stamped on the rating plate.

© Innomotics 2024

Standard induction motors optimized for converter operation – VSD10 line

Aluminum series Innomotics GP 1LE1092

Selection and ordering data

Motor protection	Article No. supplement: Motor protection code letter 15th position of the Article No.	Article No. supplement: Additional identification code with order code and plain text if required	Frame size 100	112	132	160	Motor version	
			1LE1092				Standard Efficiency	
1LE1092-.....-..	■ .	Order code						
Motor protection								
1 or 3 PTC thermistors – for tripping (2 terminals) [1]	**B**	–	✓	✓	✓	✓		
2 or 6 PTC thermistors – for alarm and tripping (4 terminals) [1]	**C**	–	✓	✓	✓	✓		
3 Pt100 resistance thermometers (6 terminals) [1]	**H**	–	✓	✓	✓	✓		
1 Pt1000 resistance thermometer (2 terminals) [2]	**K**	–	○	○	○	○		
2 Pt1000 resistance thermometers (4 terminals) [2]	**L**	–	✓	✓	✓	✓		
1 Pt100 resistance thermometers (2 terminals) [1]	**P**	–	✓	✓	✓	✓		
3 Pt100 resistance thermometers (9 terminals) [1]	**Q**	–	✓	✓	✓	✓		
6 Pt100 resistance thermometers (18 terminals) [1]	**R**	–	✓	✓	✓	✓		
3 bimetal sensors (NC contacts) for tripping (2 terminals) [1]	**Z**	**Q3A**	✓	✓	✓	✓	Only for:	Voltage code 2-1 (12th and 13th position of the Article No.)

○ Without additional charge
✓ With additional charge

5

[1] Evaluation with associated tripping unit (see Catalog IC 10) is recommended.

[2] Not UL-certified. Not in combination with option **D39**.

© Innomotics 2024

Standard induction motors optimized for converter operation – VSD10 line

Selection and ordering data

Motor protection	Article No. supplement		Frame size										Motor version	
	Motor protection code letter 15th position of the Article No.	Additional identification code with order code and plain text if required	100	112	132	160	180	200	225	250	280	315		
			1LE1592										Standard Efficiency	
1LE1592-.....-.. ■ .		Order code												
Motor protection														
1 or 3 PTC thermistors – for tripping (2 terminals) [1]	**B**	–	✓	✓	✓	✓	✓	✓	✓	✓	✓	✓		
2 or 6 PTC thermistors – for alarm and tripping (4 terminals) [1]	**C**	–	✓	✓	✓	✓	✓	✓	✓	✓	✓	✓		
3 Pt100 resistance thermometers (6 terminals)	**H**	–	✓	✓	✓	✓	✓	✓	✓	✓	✓	✓		
1 Pt1000 resistance thermometers (2 terminals) [3]	**K**	–	○	○	○	○	○	○	○	○	○	○		
2 Pt1000 resistance thermometers (4 terminals) [3]	**L**	–	✓	✓	✓	✓	✓	✓	✓	✓	✓	✓		
1 Pt100 resistance thermometer (2 terminals)	**P**	–	✓	✓	✓	✓	✓	✓	✓	✓	✓	✓		
3 Pt100 resistance thermometers (9 terminals)	**Q**	–	✓	✓	✓	✓	✓	✓	✓	✓	✓	✓		
6 Pt100 resistance thermometers (18 terminals)	**R**	–	✓	✓	✓	✓	✓	✓	✓	✓	✓	✓		
3 bimetal sensors (NC contacts) for tripping (2 terminals) [2]	**Z**	**Q3A**	✓	✓	✓	✓	✓	✓	✓	✓	✓	✓	Only for:	Voltage code 2-1 (12th and 13th position of the Article No.)

○ Without additional charge
✓ With additional charge

5

[1] Evaluation with associated tripping unit (see Catalog IC 10) is recommended.
[2] Only applicable for voltage code (12th and 13th position of the Article No.) 2-1.
[3] Not possible in combination with UL.

© Innomotics 2024

Standard induction motors optimized for converter operation – VSD10 line

Aluminum series Innomotics GP 1LE1092

Selection and ordering data

Terminal box position	Article No. supplement		Frame size				Motor version
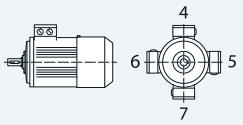	Terminal box position code 16th position of the Article No.	Additional identification code with order code and plain text if required	**100**	**112**	**132**	**160**	
			1LE1092				Standard Efficiency
1LE1092-.....-... ■		Order code					
Terminal box position							
Terminal box top [1]	**4**	–	☐	☐	☐	☐	
Terminal box right-hand side [2]	**5**	–	✓	✓	✓	✓	
Terminal box left-hand side [2]	**6**	–	✓	✓	✓	✓	
Terminal box bottom [2]	**7**	–	✓	✓	✓	✓	

☐ Standard version
✓ With additional charge

5

[1] For types of construction with feet, cast feet are standard. Screwed-on feet are available with order code **H01**.

[2] For types of construction with feet, screwed-on feet are standard.

© Innomotics 2024

Standard induction motors optimized for converter operation – VSD10 line

Selection and ordering data

Terminal box position	Article No. supplement		Frame size										Motor version
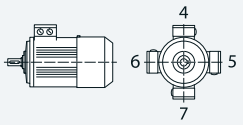	Terminal box position code 16th position of the Article No.	Additional identification code with order code and plain text if required	**100**	**112**	**132**	**160**	**180**	**200**	**225**	**250**	**280**	**315**	
			1LE1592										Standard Efficiency
1LE1592-.....-... ■		Order code											
Terminal box position													
Terminal box top [1]	**4**	–	☐	☐	☐	☐	☐	☐	☐	☐	☐	☐	
Terminal box right-hand side [2]	**5**	–	✓	✓	✓	✓	✓	✓	✓	✓	✓	✓	
Terminal box left-hand side [2]	**6**	–	✓	✓	✓	✓	✓	✓	✓	✓	✓	✓	
Terminal box bottom [2]	**7**	–	✓	✓	✓	✓	–	–	–	–	–	–	

☐ Standard version
✓ With additional charge

5

[1] For types of construction with feet, cast feet are standard. Screwed-on feet are available with order code **H01**.

[2] For types of construction with feet, screwed-on feet are standard.

© Innomotics 2024

Standard induction motors optimized for converter operation – VSD10 line

Aluminum series Innomotics GP 1LE1092

Selection and ordering data

Special versions	Additional identification code -Z with order code and plain text if required	Frame size 100	112	132	160	Motor version	
		1LE1092				Standard Efficiency	
1LE1092- . . . . . - . . . . -Z	Order code						
Motor protection							
1 or 3 PTC thermistors – for tripping (2 terminals)	**Q11**	✓	✓	✓	✓		
2 or 6 PTC thermistors – for alarm and tripping (4 terminals)	**Q12**	✓	✓	✓	✓		
3 bimetal sensors (NC contacts) for tripping (2 terminals)	**Q31**	✓	✓	✓	✓		
6 bimetal sensors (NC contacts) for alarm and tripping (4 terminals)	**Q32**	✓	✓	✓	✓		
3 bimetal sensors (NC contacts) for tripping (6 terminals)	**Q33**	O. R.	O. R.	O. R.	O. R.		
1 Pt1000 resistance thermometer (2 terminals)	**Q35**	○	○	○	○		
2 Pt1000 resistance thermometers (4 terminals)	**Q36**	✓	✓	✓	✓		
3 Pt100 resistance thermometers (6 terminals)	**Q60**	✓	✓	✓	✓		
6 Pt100 resistance thermometers (12 terminals)	**Q61**	✓	✓	✓	✓		
1 Pt100 resistance thermometer (2 terminals)	**Q62**	✓	✓	✓	✓		
3 Pt100 resistance thermometers (9 terminals)	**Q63**	✓	✓	✓	✓		
6 Pt100 resistance thermometers (18 terminals)	**Q64**	✓	✓	✓	✓		
2 Pt100 resistance thermometers in basic configuration for bearings (4 terminals)	**Q72**	O. R.	O. R.	O. R.	O. R.		
2 Pt100 resistance thermometers for bearings (6 terminals)	**Q78**	O. R.	O. R.	O. R.	O. R.		
2 Pt100 double resistance thermometers for bearings (12 terminals)	**Q79**	O. R.	O. R.	O. R.	O. R.	Only for:	Motoren in Kombination mit Kurzangabe F40 und F41 (Baugrößen 225 bis 315)
Motor connection and terminal box							
External grounding	**H04**	✓	✓	✓	✓		
Terminal box on NDE	**H08**	✓	✓	✓	✓		
Connected in star for dispatch	**M01**	✓	✓	✓	✓		
Connected in delta for dispatch	**M02**	✓	✓	✓	✓		
Rotation of the terminal box through 90°, entry from DE	**R10**	○	○	○	○		
Rotation of the terminal box through 90°, entry from NDE	**R11**	○	○	○	○		
Rotation of the terminal box through 180°	**R12**	○	○	○	○		
Terminal box in position 0°; connection from right	**R13**	○	○	○	–		
One metal cable gland	**R15**	✓	✓	✓	✓		
Metal cable gland, maximum configuration	**R18**	✓	✓	✓	✓		
3 cables protruding, 0.5 m long	**R20**	✓	✓	✓	✓		
6 cables protruding, 0.5 m long	**R22**	✓	✓	✓	✓		
Larger terminal box	**R50**	✓	✓	✓	✓		
Motor connector Han-Drive 10e for 230 VΔ/400 VY	**R70**	✓	✓	✓	–		
Motor connector EMC Han-Drive 10e for 230 VΔ/400 VY	**R71**	✓	✓	✓	–		
Version with reduced silicon amount according to VDMA 24364-C1/T70	**R77**	✓	✓	✓	✓		
Windings and insulation							
Increased air humidity/temperature with 30 to 60 g water per m^3 of air	**N30**	✓	✓	✓	✓		
Colors and paint finish							
Standard paint finish C2 in RAL 7030 stone gray		□	□	□	□		
Unpainted (only cast-iron parts primed)	**S00**	○	○	○	○		
Unpainted, only primed	**S01**	✓	✓	✓	✓		
Special paint finish C3	**S02**	✓	✓	✓	✓		

For legends, see page 5/127.

© Innomotics 2024

Standard induction motors optimized for converter operation – VSD10 line

Aluminum series Innomotics GP 1LE1092

Special versions	Additional identification code -Z with order code and plain text if required	Frame size 100	112	132	160	Motor version
		1LE1092				Standard Efficiency
1LE1092-. . . . . - . . . . -Z	Order code					
Colors and paint finish (continued)						
Special paint finish sea air resistant C4	**S03**	✓	✓	✓	✓	
Internal coating	**S05**	✓	✓	✓	✓	
Paint finish in other standard RAL colors: RAL 1015, 3000, 5002, 5009, 5010, 5012, 5015, 6011, 7001, 7011, 7016, 7031, 7032, 7035, 7037, 8012, 9005, 9010 (see Catalog Section 1 "Introduction")	**Y53 •** and paint finish RAL....	✓	✓	✓	✓	
Paint finish in special RAL colors: For RAL colors, see "Special paint finish in special RAL colors" (see Catalog Section 1 "Introduction")	**Y56 •** and paint finish RAL....	✓	✓	✓	✓	
Non-standard colors Colors see "Paint finish in non-standard colors (see Catalog Section 1 "Introduction")	**Y66 •** and paint finish	✓	✓	✓	✓	
Modular technology – Basic versions						
Mounting of holding brake (standard assignment)	**F01**	✓	✓	✓	✓	
Mounting of Kübler Sendix 5020 HTL, 1024 I rotary pulse encoder	**G11**	✓	✓	✓	✓	
Mounting of Kübler Sendix 5020 TTL, 1024 I rotary pulse encoder	**G12**	✓	✓	✓	✓	
Modular technology – Additional versions						
Brake supply voltage 24 V DC	**F10**	✓	✓	✓	✓	
Brake supply voltage 230 V AC, 50/60 Hz	**F11**	○	○	○	○	
Brake supply voltage 400 V AC, 50/60 Hz	**F12**	✓	✓	✓	✓	
Brake supply voltage 180 V DC	**F17**	✓	✓	✓	✓	Only for: Combination with F01
Brake supply voltage 205 V DC	**F18**	✓	✓	✓	✓	Only for: Combination with F01
Mechanical manual brake release with lever (no locking)	**F50**	✓	✓	✓	✓	
Special technology						
Mounting of rotary pulse encoder HOG 86E	**G03**	✓	✓	✓	✓	
Mounting of LL 861 900 220 rotary pulse encoder	**G04**	✓	✓	✓	✓	
Mounting of HOG 9 DN 1024 I rotary pulse encoder	**G05**	✓	✓	✓	✓	
Mounting of HOG 10 D 1024 I rotary pulse encoder	**G06**	✓	✓	✓	✓	
Mounting of Kübler Sendix 5834FS2 1024, SIL-2 rotary pulse encoder	**G21**	✓	✓	✓	✓	
Mounting of Kübler Sendix 5834FS3 1024, SIL-3 rotary pulse encoder	**G22**	✓	✓	✓	✓	
Mechanical version and degrees of protection						
Prepared for mountings, centering hole only	**G40**	✓	✓	✓	✓	
Prepared for mountings with D12 shaft	**G41**	✓	✓	✓	✓	
Prepared for mountings with D16 shaft	**G42**	✓	✓	✓	✓	
Mechanical protection for encoder	**G43**	✓	✓	✓	✓	
Protective cover	**H00**	✓	✓	✓	✓	
Screwed-on (instead of cast) feet	**H01**	✓	✓	✓	✓	
Vibration-proof version; vibration resistance to Class 3M4 according to IEC 60721-3-3:1994	**H02**	✓	✓	✓	✓	
Condensation drainage holes	**H03**	✓	✓	✓	✓	
Rust-resistant screws (externally)	**H07**	✓	✓	✓	✓	
IP66 degree of protection	**H19**	✓	✓	✓	✓	
IP65 degree of protection	**H20**	✓	✓	✓	✓	
IP56 degree of protection	**H22**	✓	✓	✓	✓	
Drive-end seal for flange-mounted motors, oil-tight to 0.1 bar	**H23**	✓	✓	✓	✓	

For legends, see page 5/127.

© Innomotics 2024

Standard induction motors optimized for converter operation – VSD10 line

Aluminum series Innomotics GP 1LE1092

Special versions	Additional identification code **-Z** with order code and plain text if required	Frame size 100	112	132	160	Motor version
		1LE1092				Standard Efficiency
1LE1092-. . . . . - . . . . -Z	Order code					
Coolant temperature and installation altitude						
Coolant temperature –40 to +40 °C	**D03**	✓	✓	✓	✓	
Coolant temperature –30 to +40 °C	**D04**	✓	✓	✓	✓	
Versions in accordance with standards and specifications						
Version according to UL and CSA (Canadian regulation)	**D39**	✓	✓	✓	✓	
TR CU product safety certificate EAC for Eurasian Customs Union	**D47**	✓	✓	✓	✓	
UKCA-marking		☐	☐	☐	☐	
Bearings and lubrication						
Located bearing DE	**L20**	✓	✓	✓	✓	
Located bearing NDE	**L21**	✓	✓	✓	☐	
Bearing design for increased cantilever forces	**L22**	✓	✓	✓	✓	
Regreasing device	**L23**	✓	✓	✓	✓	
Bearings reinforced at both ends for DE and NDE, bearing size 63	**L25**	✓	✓	✓	✓	
Bearing for high axial tension forces	**L34**	✓	✓	✓	✓	
Bearing insulation NDE	**L51**	✓	✓	✓	✓	
Measuring nipple for SPM shock pulse measurement for bearing inspection	**Q01**	✓	✓	✓	✓	
Motor design VSD, higher speed up to .... rpm, vibration level .. acc. IEC60034-14, with or w/o routine test	**Y37**	O. R.	O. R.	O. R.	O. R.	
Balance and vibration severity						
Vibration severity grade A		☐	☐	☐	☐	
Half-key balancing (standard)		☐	☐	☐	☐	
Balancing without feather key	**L01**	✓	✓	✓	✓	
Full-key balancing	**L02**	✓	✓	✓	✓	
Shaft and rotor						
Shaft extension with standard dimensions, without feather keyway	**L04**	✓	✓	✓	✓	
Standard, cylindrical shaft extension (second shaft extension) NDE acc. to EN 50347	**L05**	✓	✓	✓	✓	
Standard shaft made of stainless steel (e.g. 1.4021)	**L06**	✓	✓	✓	✓	
Shaft extension run-out in accordance with IEC 60072-1 precision class	**L07**	✓	✓	✓	✓	
Shaft extension run-out, concentricity and perpendicularity in accordance with IEC 60072-1 precision class for flange-mounted motors	**L08**	✓	✓	✓	✓	
Non-standard cylindrical shaft extension, DE	**Y58** • and customer specifications	✓	✓	✓	✓	
Non-standard cylindrical shaft extension, NDE	**Y59** • and customer specifications	✓	✓	✓	✓	
Heating and ventilation						
Mounted separately driven fan	**F70**	✓	✓	✓	✓	
Sheet metal fan cover	**F74**	✓	✓	✓	✓	
Fan cover for textile industry	**F75**	✓	✓	✓	✓	
Metal external fan	**F76**	✓	✓	✓	✓	
Without external fan and without fan cover	**F90**	✓	✓	✓	✓	
Anti-condensation heating for 230 V (2 terminals)	**Q02**	✓	✓	✓	✓	
Anti-condensation heating for 115 V (2 terminals)	**Q03**	✓	✓	✓	✓	
Rating plate and additional rating plates						
Second rating plate, loose	**M10**	✓	✓	✓	✓	
Rating plate, stainless steel	**M11**	✓	✓	✓	✓	

For legends, see page 5/127.

© Innomotics 2024

Standard induction motors optimized for converter operation – VSD10 line

Aluminum series Innomotics GP 1LE1092

Special versions	Additional identification code **-Z** with order code and plain text if required	Frame size				Motor version
		100	**112**	**132**	**160**	
		1LE1092				Standard Efficiency
1LE1092-. . . . . -. . . . -Z	Order code					
Rating plate and additional rating plates (continued)						
Additional rating plate with customer specifications	**Y82 •** and customer specifications	✓	✓	✓	✓	
Additional information on rating plate and on package label (max. 20 characters)	**Y84 •** and customer specifications	✓	✓	✓	✓	
Adhesive label, supplied loose (printed with: Article No., Serial No.; 2 lines of text)	**Y85 •** and customer specifications	✓	✓	✓	✓	
Packaging, safety notes, documentation and test certificates						
A printed version of the safety notes in German/English and safety notes in the language of the country of use is supplied in each wire-lattice pallet	**B01**	O	O	O	O	
Inspection certificate 3.1 according to EN 10204	**B02**	✓	✓	✓	✓	
Document - Electrical datasheet	**B60**	✓	✓	✓	✓	
Document - Order dimensional drawing	**B61**	✓	✓	✓	✓	
Type test with heat run for horizontal motors, with acceptance	**B83**	✓	✓	✓	✓	
"Basic" documentation package	**B90**	✓	✓	✓	✓	
"Advanced" documentation package	**B91**	✓	✓	✓	✓	
"Projects" documentation package	**B92**	✓	✓	✓	✓	
Wire-lattice pallet packaging	**B99**	O	O	O	O	

☐ Standard version
O Without additional charge
• This order code only determines the price of the version – Additional plain text is required.
✓ With additional charge
O. R. Possible on request
– Not possible

Note:
The catalog provides an overview of the available motor options but doesn't detail the correct logic combinations. For a customized selection tailored to your specific requirements, please use the SPC at the following address:
configurator.innomotics.com

© Innomotics 2024

Standard induction motors optimized for converter operation – VSD10 line

Cast-iron series Innomotics SD 1LE1592

Selection and ordering data

Special versions	Additional identification code -Z with order code and plain text if required	Frame size 100	112	132	160	180	200	225	250	280	315	Motor version
		1LE1592										Standard Efficiency
1LE1592-. . . . . -. . . . -Z	Order code											
Motor protection												
1 or 3 PTC thermistors – for tripping (2 terminals)	**Q11**	✓	✓	✓	✓	✓	✓	✓	✓	✓	✓	
2 or 6 PTC thermistors – for alarm and tripping (4 terminals)	**Q12**	O. R.	O. R.	O. R.	O. R.	O. R.	O. R.	O. R.	O. R.	O. R.	O. R.	
3 bimetal sensors (NC contacts) for tripping (2 terminals)	**Q31**	O. R.	O. R.	O. R.	O. R.	O. R.	O. R.	O. R.	O. R.	O. R.	O. R.	
6 bimetal sensors (NC contacts) for alarm and tripping (4 terminals)	**Q32**	–	–	–	–	✓	✓	✓	✓	✓	✓	Only for: Voltage code 2-1 (12th and 13th position of the Article No.)
3 bimetal sensors (NC contacts) for tripping (6 terminals)	**Q33**	O. R.	O. R.	O. R.	O. R.	O. R.	O. R.	O. R.	O. R.	O. R.	O. R.	
6 bimetal sensors (NC contacts) thermostat for alarm and tripping (12 terminals)	**Q34**	–	–	–	–	✓	✓	✓	✓	✓	✓	
1 Pt1000 resistance thermometer (2 terminals)	**Q35**	O. R.	O. R.	O. R.	O. R.	O. R.	O. R.	O. R.	O. R.	O. R.	O. R.	
2 Pt1000 resistance thermometers (4 terminals)	**Q36**	O. R.	O. R.	O. R.	O. R.	O. R.	O. R.	O. R.	O. R.	O. R.	O. R.	
3 Pt100 resistance thermometers (6 terminals)	**Q60**	✓	✓	✓	✓	✓	✓	✓	✓	✓	✓	
1 Pt100 resistance thermometer (2 terminals)	**Q62**	–	–	–	–	✓	✓	✓	✓	✓	✓	
3 Pt100 resistance thermometers (9 terminals)	**Q63**	–	–	–	–	✓	✓	✓	✓	✓	✓	
6 Pt100 resistance thermometers (18 terminals)	**Q64**	–	–	–	–	✓	✓	✓	✓	✓	✓	
2 Pt100 resistance thermometers in basic configuration for bearings (4 terminals)	**Q72**	–	–	–	–	✓	✓	✓	✓	✓	✓	
2 Pt100 resistance thermometers in for bearings (6 terminals)	**Q78**	–	–	–	–	✓	✓	✓	✓	✓	✓	
2 Pt100 double resistance thermometers for bearings (12 terminals)	**Q79**	–	–	–	–	✓	✓	✓	✓	✓	✓	
Motor connection and terminal box												
External grounding	**H04**	✓	✓	✓	✓	□	□	□	□	□	□	
Terminal box on NDE	**H08**	–	–	–	–	✓	✓	✓	✓	✓	✓	
Second external grounding	**H70**	–	–	–	–	✓	✓	✓	✓	✓	✓	
Connected in star for dispatch	**M01**	✓	✓	✓	✓	✓	✓	✓	✓	✓	✓	
Connected in delta for dispatch	**M02**	✓	✓	✓	✓	✓	✓	✓	✓	✓	✓	
Rotation of the terminal box through 90°, entry from DE	**R10**	✓	✓	✓	✓	✓	✓	✓	✓	✓	✓	
Rotation of the terminal box through 90°, entry from NDE	**R11**	✓	✓	✓	✓	✓	✓	✓	✓	✓	✓	
Rotation of the terminal box through 180°	**R12**	○	○	○	○	✓	✓	✓	✓	✓	✓	
One EMC cable gland	**R14**	–	–	–	–	✓	✓	✓	✓	✓	✓	
One metal cable gland	**R15**	✓	✓	✓	✓	✓	✓	✓	✓	✓	✓	
EMC cable gland, maximum configuration	**R16**	–	–	–	–	✓	✓	✓	✓	✓	✓	
Stud terminal for cable connection, accessories pack (3 items)	**R17**	–	–	–	–	–	–	–	✓	✓	✓	
Saddle terminal for connection without cable lug, accessories pack	**R19**	–	–	–	–	–	–	–	✓	✓	✓	
Larger terminal box	**R50**	✓	✓	✓	✓	✓	✓	✓	✓	✓	✓	
Terminal box without cable entry opening	**R51**	○	○	○	○	○	○	○	○	○	○	
Drilled removable entry plate	**R52**	–	–	–	–	✓	✓	✓	✓	✓	✓	
Undrilled removable entry plate	**R53**	–	–	–	–	✓	✓	✓	✓	✓	✓	
Cast-iron auxiliary terminal box (small)	**R62**	–	–	–	–	✓	✓	✓	✓	✓	✓	
2 small cast-iron auxiliary terminal boxes	**R67**	✓	✓	✓	✓	✓	✓	✓	✓	✓	✓	
Version with reduced silicon amount according to VDMA 24364-C1/T70	**R77**	✓	✓	✓	✓	✓	✓	✓	✓	✓	✓	
Non-standard threaded through hole (metric, NPT or G thread)	**Y61 •** and customer specifications	–	–	–	–	✓	✓	✓	✓	✓	✓	

For legend, see page 5/132.

© Innomotics 2024

Standard induction motors optimized for converter operation – VSD10 line

Cast-iron series Innomotics SD 1LE1592

Special versions	Additional identification code -Z with order code and plain text if required	Frame size 100	112	132	160	180	200	225	250	280	315	Motor version
		1LE1592										Standard Efficiency
1LE1592-.....-....-Z	Order code											
Windings and insulation												
Increased air humidity/temperature with 30 to 60 g water per m³ of air	**N30**	✓	✓	✓	✓	✓	✓	✓	✓	✓	✓	
Increased air humidity/temperature with 60 to 100 g water per m³ of air	**N31**	–	–	–	–	✓	✓	✓	✓	✓	✓	
Colors and paint finish												
Standard paint finish C2 in RAL 7030 stone gray		□	□	□	□	□	□	□	□	□	□	
Unpainted (only cast-iron parts primed)	**S00**	○	○	○	○	○	○	○	○	○	○	
Unpainted, only primed	**S01**	✓	✓	✓	✓	✓	✓	✓	✓	✓	✓	
Special paint finish C3	**S02**	✓	✓	✓	✓	✓	✓	✓	✓	✓	✓	
Special paint finish sea air resistant C4	**S03**	✓	✓	✓	✓	✓	✓	✓	✓	✓	✓	
Special paint finish for use offshore C5	**S04**	✓	✓	✓	✓	✓	✓	✓	✓	✓	✓	
Internal coating	**S05**	–	–	–	–	✓	✓	✓	✓	✓	✓	
Special paint finish C5mid with medium durability	**S08**	✓	✓	✓	✓	✓	✓	✓	✓	✓	✓	
Special paint finish CX for offshore with high durability	**S09**	✓	✓	✓	✓	✓	✓	✓	✓	✓	✓	
Paint finish in other standard RAL colors: RAL 11015, 3000, 5002, 5009, 5010, 5012, 5015, 6011, 7001, 7011, 7016, 7031, 7032, 7035, 7037, 8012, 9005, 9010 (see Catalog Section 1 "Introduction")	**Y53 •** and paint finish RAL....	✓	✓	✓	✓	✓	✓	✓	✓	✓	✓	
Paint finish in special RAL colors: For RAL colors, see "Special paint finish in special RAL colors" (see Catalog Section 1 "Introduction")	**Y56 •** and paint finish RAL....	✓	✓	✓	✓	✓	✓	✓	✓	✓	✓	
Non-standard colors Colors see "Paint finish in non-standard colors (see Catalog Section 1 "Introduction")	**Y66 •** and paint finish	✓	✓	✓	✓	✓	✓	✓	✓	✓	✓	
Modular technology – Basic versions												
Mounting of holding brake (standard assignment)	**F01**	✓	✓	✓	✓	✓	✓	✓	✓	✓	✓	
Mounting of Kübler Sendix 5020 HTL, 1024 I rotary pulse encoder	**G11**	✓	✓	✓	✓	✓	✓	✓	✓	✓	✓	
Mounting of Kübler Sendix 5020 TTL, 1024 I rotary pulse encoder	**G12**	✓	✓	✓	✓	✓	✓	✓	✓	✓	✓	
Modular technology – Additional versions												
Brake supply voltage 24 V DC	**F10**	✓	✓	✓	✓	✓	✓	✓	✓	✓	✓	
Brake supply voltage 230 V AC, 50/60 Hz	**F11**	○	○	○	○	○	○	○	○	○	○	
Brake supply voltage 400 V AC, 50/60 Hz	**F12**	✓	✓	✓	✓	✓	✓	✓	✓	✓	✓	
Brake supply voltage 180 V DC	**F17**	✓	✓	✓	✓	✓	✓	✓	✓	✓	✓	Only for: Combination with F01
Brake supply voltage 205 V DC	**F18**	✓	✓	✓	✓	✓	✓	✓	✓	✓	✓	Only for: Combination with F01
Mechanical manual brake release with lever (no locking)	**F50**	✓	✓	✓	✓	✓	✓	✓	✓	✓	✓	
Special technology												
Mounting of rotary pulseencoder HOG 86E	**G03**	✓	✓	✓	✓	✓	✓	✓	✓	✓	✓	
Mounting of LL 861 900 220 rotary pulse encoder	**G04**	✓	✓	✓	✓	✓	✓	✓	✓	✓	✓	
Mounting of HOG 9 DN 1024 I rotary pulse encoder	**G05**	✓	✓	✓	✓	✓	✓	✓	✓	✓	✓	
Mounting of HOG 10 D 1024 I rotary pulse encoder	**G06**	✓	✓	✓	✓	✓	✓	✓	✓	✓	✓	
Mounting of POG 10 DN rotary pulse encoder (only in combination with separately driven fan or brake)	**G07**	–	–	–	–	✓	✓	✓	✓	✓	✓	
Mounting of POG 9 rotary pulse encoder (only in combination with separately driven fan or brake)	**G08**	–	–	–	–	✓	✓	✓	✓	✓	✓	
Mounting of Kübler Sendix 5834FS2 1024, SIL-2 rotary pulse encoder	**G21**	✓	✓	✓	✓	✓	✓	✓	✓	✓	✓	
Mounting of Kübler Sendix 5834FS3 1024, SIL-3 rotary pulse encoder	**G22**	✓	✓	✓	✓	✓	✓	✓	✓	✓	✓	
Mounting of HOGS100S-B76.626.01024.1 rotary pulse encoder	**G25**	–	–	–	–	✓	✓	✓	✓	✓	✓	

For legends, see page 5/132.

© Innomotics 2024

Standard induction motors optimized for converter operation – VSD10 line

Cast-iron series Innomotics SD 1LE1592

Special versions	Additional identification code -Z with order code and plain text if required	Frame size 100	112	132	160	180	200	225	250	280	315	Motor version
		1LE1592										Standard Efficiency
1LE1592-. . . . . -. . . . -Z	Order code											
Special technology (continued)												
Mounting of LL FSI 862-184560-1024, SIL-2 rotary pulse encoder	**G27**	–	–	–	–	✓	✓	✓	✓	✓	✓	
Mounting of a special type of rotary pulse encoder	**Y70 •** and customer specifications	–	–	–	–	O. R.	O. R.	O. R.	O. R.	O. R.	O. R.	
Mechanical version and degrees of protection												
Prepared for mountings, centering hole only	**G40**	✓	✓	✓	✓	☐	☐	☐	☐	☐	☐	
Prepared for mountings with D12 shaft	**G41**	✓	✓	✓	✓	✓	✓	✓	✓	✓	✓	
Prepared for mountings with D16 shaft	**G42**	✓	✓	✓	✓	✓	✓	✓	✓	✓	✓	
Mechanical protection for encoder	**G43**	✓	✓	✓	✓	✓	✓	✓	✓	✓	✓	
Protective cover	**H00**	✓	✓	✓	✓	✓	✓	✓	✓	✓	✓	
Screwed-on (instead of cast) feet	**H01**	✓	✓	✓	✓	✓	✓	✓	✓	✓	✓	
Vibration-proof version; vibration resistance to Class 3M4 according to IEC 60721-3-3:1994	**H02**	–	–	–	–	✓	✓	✓	✓	–	–	
Condensation drainage holes		☐	☐	☐	☐	☐	☐	☐	☐	☐	☐	
Rust-resistant screws (externally)	**H07**	✓	✓	✓	✓	✓	✓	✓	✓	✓	✓	
IP66 degree of protection	**H19**	✓	✓	✓	✓	✓	✓	✓	✓	✓	✓	
IP65 degree of protection	**H20**	✓	✓	✓	✓	✓	✓	✓	✓	✓	✓	
IP54 degree of protection	**H21**	–	–	–	–	✓	✓	✓	✓	✓	✓	
IP56 degree of protection	**H22**	✓	✓	✓	✓	✓	✓	✓	✓	✓	✓	
Drive-end seal for flange-mounted motors, oil-tight to 0.1 bar	**H23**	✓	✓	✓	✓	✓	✓	✓	✓	✓	✓	
Grounding brush for converter operation	**L52**	–	–	–	–	–	–	–	–	✓	✓	
Coolant temperature and installation altitude												
Coolant temperature –50 to +40 °C	**D02**	–	–	–	–	✓	✓	✓	✓	✓	✓	
Coolant temperature –40 to +40 °C	**D03**	✓	✓	✓	✓	✓	✓	✓	✓	✓	✓	
Coolant temperature –30 to +40 °C	**D04**	O. R.	O. R.	O. R.	O. R.	✓	✓	✓	✓	✓	✓	
Versions in accordance with standards and specifications												
Version according to UL and CSA (Canadian regulation)	**D39**	✓	✓	✓	✓	✓	✓	✓	✓	✓	✓	
TR CU product safety certificate EAC for Eurasian Customs Union	**D47**	✓	✓	✓	✓	✓	✓	✓	✓	✓	✓	
UKCA-marking		☐	☐	☐	☐	☐	☐	☐	☐	☐	☐	
Bearings and lubrication												
Regreasing device with M10 × 1 grease nipple according to DIN 71412 A	**L19**	–	–	–	–	✓	✓	✓	✓	○	○	
Located bearing DE	**L20**	✓	✓	✓	✓	✓	✓	✓	✓	✓	✓	
Located bearing NDE	**L21**	✓	✓	✓	☐	☐	☐	☐	☐	☐	☐	
Bearing design for increased cantilever forces	**L22**	✓	✓	✓	✓	✓	✓	✓	✓	✓	✓	
Regreasing device	**L23**	✓	✓	✓	✓	✓	✓	✓	✓	☐	☐	
Bearings reinforced at both ends for DE and NDE, bearing size 63	**L25**	✓	✓	✓	✓	✓	✓	✓	✓	☐	☐	
Reinforced bearings at both DE and NDE, DE bearing for increased cantilever forces	**L28**	–	–	–	–	✓	✓	✓	✓	–	–	
Bearing for high axial tension forces	**L34**	✓	✓	✓	✓	–	–	✓	✓	–	–	
Bearing insulation DE	**L50**	–	–	–	–	–	–	✓	✓	✓	✓	
Bearing insulation NDE	**L51**	✓	✓	✓	✓	–	–	✓	✓	☐	☐	
Measuring nipple for SPM shock pulse measurement for bearing inspection	**Q01**	✓	✓	✓	✓	✓	✓	✓	✓	✓	✓	
Motor design VSD, higher speed up to .... rpm, vibration level .. acc. IEC60034-14, with or w/o routine test	**Y37**	O. R.	O. R.	O. R.	O. R.	O. R.	O. R.	O. R.	O. R.	O. R.	O. R.	
Balance and vibration severity												
Vibration severity grade A		☐	☐	☐	☐	☐	☐	☐	☐	☐	☐	
Half-key balancing (standard)		☐	☐	☐	☐	☐	☐	☐	☐	☐	☐	
Balancing without feather key	**L01**	✓	✓	✓	✓	✓	✓	✓	✓	✓	✓	
Full-key balancing	**L02**	✓	✓	✓	✓	✓	✓	✓	✓	✓	✓	

For legends, see page 5/132.

© Innomotics 2024

Standard induction motors optimized for converter operation – VSD10 line

Cast-iron series Innomotics SD 1LE1592

Special versions	Additional identification code -Z with order code and plain text if required	Frame size										Motor version
		100	112	132	160	180	200	225	250	280	315	
		1LE1592										Standard Efficiency
1LE1592-. . . . . -. . . . -Z	Order code											
Shaft and rotor												
Shaft extension with standard dimensions, without feather keyway	**L04**	✓	✓	✓	✓	✓	✓	✓	✓	✓	✓	
Standard, cylindrical shaft extension (second shaft extension) NDE acc. to EN 50347	**L05**	✓	✓	✓	✓	✓	✓	✓	✓	✓	✓	
Standard shaft made of stainless steel (e.g. 1.4021)	**L06**	–	–	–	–	✓	✓	✓	✓	✓	✓	
Shaft extension run-out in accordance with IEC 60072-1 precision class	**L07**	✓	✓	✓	✓	✓	✓	✓	✓	✓	✓	
Shaft extension run-out, concentricity and perpendicularity in accordance with IEC 60072-1 precision class for flange-mounted motors	**L08**	✓	✓	✓	✓	✓	✓	✓	✓	✓	✓	
Non-standard cylindrical shaft extension, DE	**Y58 •** and customer specifications	✓	✓	✓	✓	✓	✓	✓	✓	✓	✓	
Non-standard cylindrical shaft extension, NDE	**Y59 •** and customer specifications	✓	✓	✓	✓	✓	✓	✓	✓	✓	✓	
Special shaft steel	**Y60 •** and customer specifications	O. R.	O. R.	O. R.	O. R.	O. R.	O. R.	O. R.	O. R.	O. R.	O. R.	
Heating and ventilation												
Mounted separately driven fan	**F70**	✓	✓	✓	✓	✓	✓	✓	✓	✓	✓	
Sheet metal fan cover	**F74**	✓	✓	✓	✓	✓	✓	✓	✓	✓	✓	
Metal external fan	**F76**	✓	✓	✓	✓	✓	✓	✓	✓	✓	✓	
Anti-condensation heating for 230 V (2 terminals)	**Q02**	✓	✓	✓	✓	✓	✓	✓	✓	✓	✓	
Anti-condensation heating for 115 V (2 terminals)	**Q03**	✓	✓	✓	✓	✓	✓	✓	✓	✓	✓	
Separately driven fan with non-standard voltage and/or frequency	**Y81 •** and customer specifications	–	–	–	–	–	–	✓	✓	✓	✓	
Rating plate and additional rating plates												
Second rating plate, loose	**M10**	✓	✓	✓	✓	✓	✓	✓	✓	✓	✓	
Rating plate, stainless steel	**M11**	✓	✓	✓	✓	✓	✓	✓	✓	✓	✓	
Additional rating plate with customer specifications	**Y82 •** and customer specifications	✓	✓	✓	✓	✓	✓	✓	✓	✓	✓	
Additional information on rating plate and on package label (max. 20 characters)	**Y84 •** and customer specifications	✓	✓	✓	✓	✓	✓	✓	✓	✓	✓	
Adhesive label, supplied loose (printed with: Article No., Serial No.; 2 lines of text)	**Y85 •** and customer specifications	–	–	–	–	✓	✓	✓	✓	✓	✓	
Extension of the liability for defects												
Extension of the liability for defects by 12 months to a total of 24 months (2 years) from delivery	**Q80**	–	–	–	–	✓	✓	✓	✓	✓	✓	
Extension of the liability for defects by 24 months to a total of 36 months (3 years) from delivery	**Q82**	–	–	–	–	✓	✓	✓	✓	✓	✓	

For legends, see page 5/132.

© Innomotics 2024

Standard induction motors optimized for converter operation – VSD10 line

Cast-iron series Innomotics SD 1LE1592

Special versions	Additional identification code **-Z** with order code and plain text if required	Frame size										Motor version
		100	**112**	**132**	**160**	**180**	**200**	**225**	**250**	**280**	**315**	
		1LE1592										Standard Efficiency
1LE1592- . . . . . - . . . . -Z	Order code											
Packaging, safety notes, documentation and test certificates												
Inspection certificate 3.1 according to EN 10204	**B02**	✓	✓	✓	✓	✓	✓	✓	✓	✓	✓	
Document - Electrical datasheet	**B60**	✓	✓	✓	✓	✓	✓	✓	✓	✓	✓	
Document - Order dimensional drawing	**B61**	✓	✓	✓	✓	✓	✓	✓	✓	✓	✓	
Standard test (routine test) with acceptance	**B65**	–	–	–	–	✓	✓	✓	✓	✓	✓	
Remote acceptance	**B77**	–	–	–	–	–	–	✓	✓	✓	✓	
Hybrid acceptance	**B78**	–	–	–	–	–	–	✓	✓	✓	✓	
Type test with heat run for horizontal motors, with acceptance	**B83**	✓	✓	✓	✓	✓	✓	✓	✓	✓	✓	
"Basic" documentation package	**B90**	✓	✓	✓	✓	✓	✓	✓	✓	✓	✓	
"Advanced" documentation package	**B91**	✓	✓	✓	✓	✓	✓	✓	✓	✓	✓	
"Projects" documentation package	**B92**	✓	✓	✓	✓	✓	✓	✓	✓	✓	✓	

☐ Standard version
O Without additional charge
• This order code only determines the price of the version – Additional plain text is required.
✓ With additional charge
O. R. Possible on request
– Not possible

Note:
The catalog provides an overview of the available motor options but doesn't detail the correct logic combinations.
For a customized selection tailored to your specific requirements, please use the SPC at the following address:
configurator.innomotics.com

© Innomotics 2024

Overview

Slide rails with fixing bolts and tensioning screws according to DIN 42923

Slide rails are used to tension the belt of a machine easily and conveniently when there is no belt-tensioning pulley. They are fixed to the base using stone bolts or foundation blocks.

The assignment of slide rails to motor size can be found in DIN 42923. For motors of frame sizes 355 to 450, there are no standardized slide rails (please inquire).

Available from:

Lütgert & Co. GmbH
Postfach 42 51
33276 Gütersloh, Germany
Phone +49 (5241) 7407-0
Fax +49 (5241) 7407-90

www.luetgert-antriebe.de
E-Mail: info@luetgert-antriebe.de

Foundation blocks according to DIN 799

The foundation blocks are inserted into the stone foundation and embedded in concrete. They are used for fixing machines of medium size, slide rails, pedestal bearings, base frames, etc. After the fixing bolts have been unscrewed, the machines can be shifted without them having to be lifted.

When the machine is initially installed, the foundation blocks that are bolted to the machine (without washers) and fitted with taper pins are not embedded with concrete until the machine has been fully aligned. In this case, the machine is positioned 2 to 3 mm lower. The difference in shaft height is compensated by inserting shims on final installation. The taper pins safeguard the exact position of the machine when it is repeatedly removed and replaced without the need for realignment.

Available from:

Lütgert & Co. GmbH
Postfach 42 51
33276 Gütersloh, Germany
Phone +49 (5241) 7407-0
Fax +49 (5241) 7407-90

www.luetgert-antriebe.de
Email: info@luetgert-antriebe.de

Taper pins according to DIN 258 with threaded ends and constant taper lengths

Taper pins are used for components that are repeatedly removed. The drilled hole is conically ground using a conical reamer until the pin can be pushed in by hand until the cone shoulder lies approx. 3 to 4 mm above the rim of the hole.

It can then be driven in using a hammer until it is correctly seated. The pin is removed from the drilled hole by screwing on the nut and tightening it.

Standardized taper pins are commercially available.

For instance, available from:

Otto Roth GmbH & Co. KG
Rutesheimer Strasse 22
70499 Stuttgart, Germany
Phone +49 (711) 1388-0
Fax +49 (711) 1388-233

www.ottoroth.de
Email: info@ottoroth.de

Couplings

The motor from Innomotics is connected to the machine or gear unit through a coupling. Flender is an important coupling manufacturer with a wide range of products.

For standard applications, Innomotics recommends that flexible couplings, types N-EUPEX and RUPEX or torsionally rigid couplings, types ARPEX and ZAPEX are used. For special applications, FLUDEX and ELPEX-S couplings are recommended.

Available from:

Siemens contact partner - ordering from catalog
Siemens MD 10.1 "FLENDER Standard Couplings"

or

Flender GmbH
Kupplungswerk Mussum
Industriepark Bocholt
Schlavenhorst 100
46395 Bocholt, Germany
Phone +49 (2871) 922185
Fax +49 (2871) 922579

www.flender.com

© Innomotics 2024

More information

Replacement motors and repair parts

- Commitment to provide replacement motors and repair parts following delivery of the motor:
  - For up to 3 years after delivery of the original motor, in the event of total motor failure, Innomotics will supply a comparable spare motor with regard to the mounting dimensions and functions (the type series may vary).
  - If a spare motor is provided within the 3-year period, this will not mean that the warranty restarts.
  - Replacement motors delivered after the active production of the motor series are also identified as spare motors on the rating plate.
  - Spare parts are offered only for these spare motors on request; repair and replacement are not possible.
  - After a period of 3 years (after the delivery of the original motor), it is only possible to repair these motors (depending on the availability of the spare parts required).
  - For up to 5 years after the delivery of the original motor, spare parts will be available and for a further 5 years, Innomotics will provide information about spare parts and will supply documents when required.
- When repair parts are ordered, the following details must be provided:
  - Designation and part number
  - Article No. and factory number of the motor.
- For bearing types, see Catalog Section 1 "Introduction".
- For standard components, a commitment to supply repaired parts does not apply.

You will find telephone numbers for other countries on our Internet site:
innomotics.com/hub/en/customer-service

© Innomotics 2024

Standard induction motors optimized for converter operation – VSD10 line

Notes on the dimensions

Overview

- Dimension designations according to EN 50347 and IEC 60072.
- Fits
  The shaft extensions specified in the dimension tables (DIN 748) and centering spigot diameters (EN 50347) are machined with the following fits:

Dimension designation	ISO fit DIN ISO 286-2	
D, DA	to 30	j6
	over 30 to 50	k6
	over 50	m6
N	to 250	j6
	over 250	h6
F, FA		h9
S	flange (FF)	H17

The drilled holes of couplings and belt pulleys should have an ISO fit of at least H7.

Dimension K: nominal dimension according IEC 60072-1, negative deviation of tolerance H17 possible.

- Dimensional tolerances
  For the following dimensions, the admissible deviations are given below:

Dimension designation	Dimension	Admissible deviation
H	to 250	– 0.5
	over 250	– 1.0
E, EA		– 0.5

Keyways and feather keyways (dimensions GA, GC, F, and FA) are made in compliance with DIN 6885 Part 1.

- All dimensions are specified in mm.
- The overall width of the motor is identical to the "AC" dimension.

Dimension sheet generator (within the SPC)

Overview

A dimensional drawing can be created in the "SPC" for every configurable motor. A dimensional drawing can be requested for every other motor.

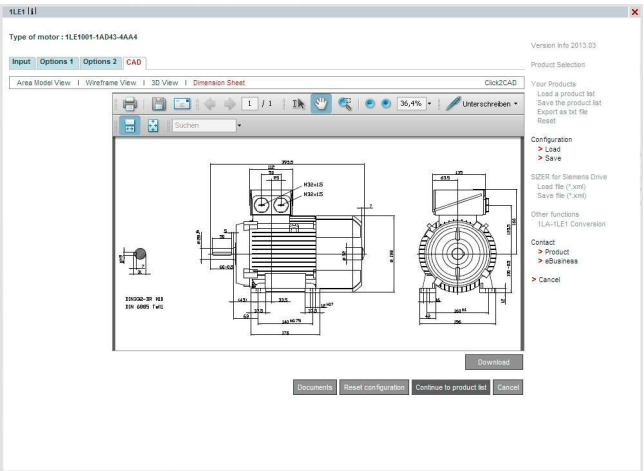

When a complete Article No. is entered with or without order codes, a dimensional drawing can be called up under the "Documentation" tab.

These dimensional drawings can be presented in different views and sections and printed.
The corresponding dimension sheets can be exported, saved and processed further in DXF format (interchange/import format for CAD systems) or as bitmap graphics.

Online access in the Siemens Industry Mall

The SPC can be used on the Internet without installation.
configurator.innomotics.com

5

© Innomotics 2024

Standard induction motors optimized for converter operation – VSD10 line

Standard Efficiency – self-ventilated · Frame sizes 100 L to 160 L

Dimensional drawings

Type of construction IM B3

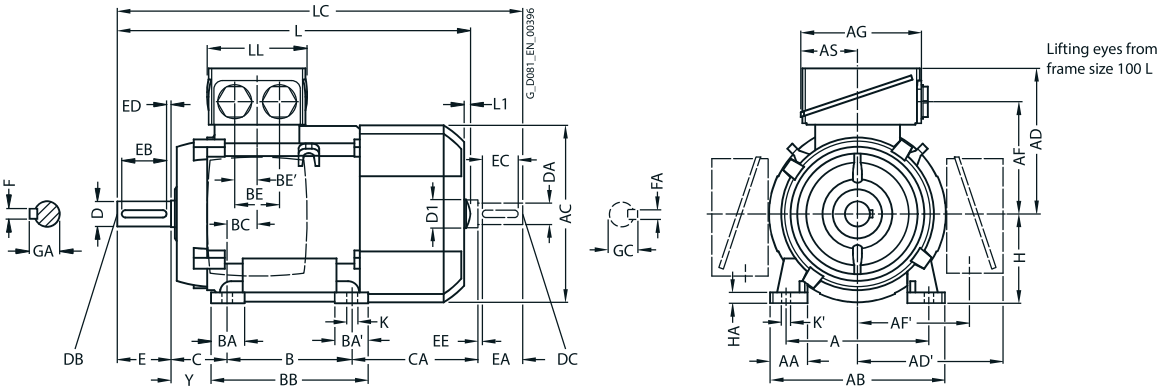

Types of construction IM B5 and IM V1

For flange dimensions, see page 1/59 (**Z** = the number of retaining holes)

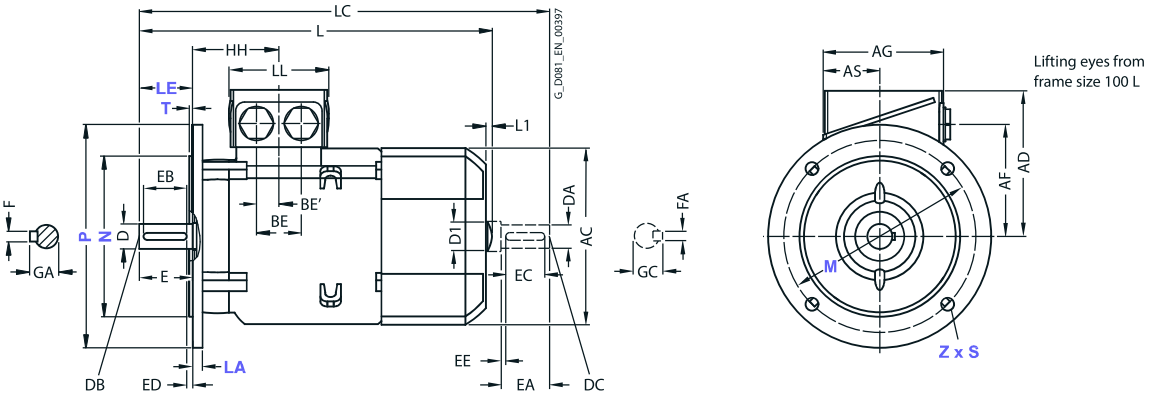

For motor			Dimension designation acc. to **IEC**																					
Frame size	Motor type 1LE1092	No. of poles	A	AA	**AB**	AC	**AD**	AD'	AF	AF'	AG	AS	B	BA	BA'	BB	BC	BE	BE'	C	CA	**H**	HA	Y
100 L	All	2, 4	160	42	**196**	198	**166**	166	125.5	125.5	135	63.5	140	37.5	37.5	176	33.5	50	25	63	141	**100**	12	45
112 M	All	2, 4	190	46	**226**	222	**177**	177	136.5	136.5	135	63.5	140	37.5	37.5	176	26	50	25	70	129.7	**112**	12	52
132 S	All	2, 4	216	53	**256**	262	**202**	202	159.5	159.5	155	70.5	140	38	76	218	26.5	48	24	89	128.5	**132**	15	69
132 M	All	2, 4	216	53	**256**	262	**202**	202	159.5	159.5	155	70.5	178	38	76	218	26.5	48	24	89	128.5	**132**	15	69
160 M	All	2, 4	254	60	**300**	314	**236.5**	236.5	190	190	175	77.5	210	44	89	300	47	57	28.5	108	148	**160**	18	85
160 L	All	2, 4	254	60	**300**	314	**236.5**	236.5	190	190	175	77.5	254	44	89	300	47	57	28.5	108	148	**160**	18	85

© Innomotics 2024

Standard induction motors optimized for converter operation – VSD10 line

Dimensional drawings

Type of construction IM B35

For flange dimensions, see page 1/59 (**Z** = the number of retaining holes)

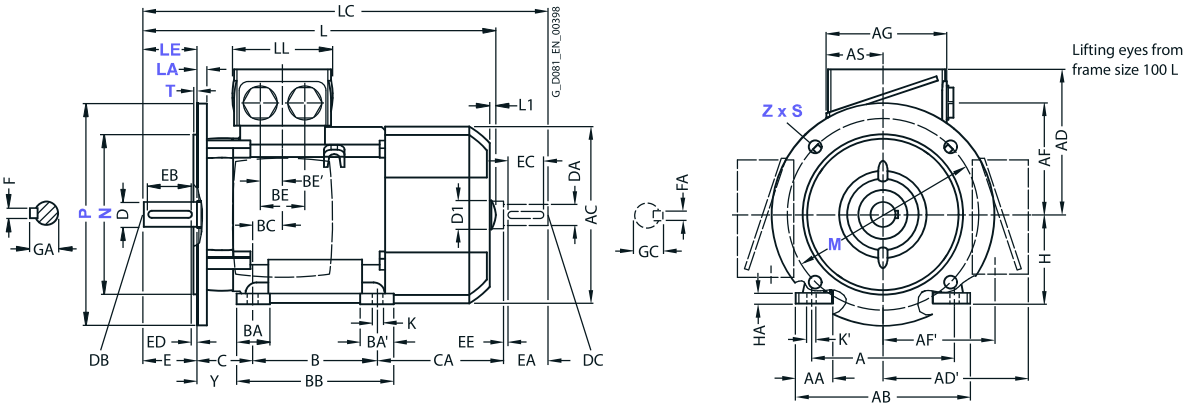

Type of construction IM B14

For flange dimensions, see page 1/59 (**Z** = the number of retaining holes)

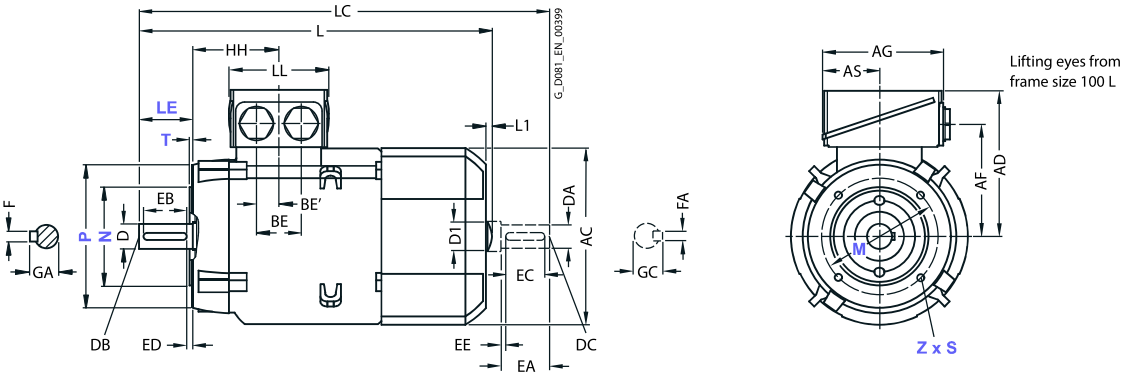

For motor			Dimension designation acc. to **IEC**								DE shaft extension							NDE shaft extension						
Frame size	Motor type 1LE1092	No. of poles	HH	K	K'	**L**[1]	L1	D1	LC	LL	D	DB	E	EB	ED	F	GA	DA	DC	EA	EC	EE	FA	GC
100 L	All	2, 4	96.5	12	16	**395.5**	7	32	454	112	28	M10	60	50	5	8	31	24	M8	50	40	5	8	27
112 M	All	2, 4	96	12	16	**389**	7	32	450	112	28	M10	60	50	5	8	31	24	M8	50	40	5	8	27
132 S	All	2, 4	115.5	12	16	**465**	8.5	39	535.5	130	38	M12	80	70	5	10	41	28	M10	60	50	5	8	31
132 M	All	2, 4	115.5	12	16	**465**	8.5	39	535.5	130	38	M12	80	70	5	10	41	28	M10	60	50	5	8	31
160 M	All	2, 4	155	15	19	**604**	10	45	730	145	42	M16	110	90	10	12	45	42	M16	110	90	10	12	45
160 L	All	2, 4	155	15	19	**604**	10	45	730	145	42	M16	110	90	10	12	45	42	M16	110	90	10	12	45

[1] The length is specified as far as the tip of the fan cover.

© Innomotics 2024

Standard induction motors optimized for converter operation – VSD10 line

Standard Efficiency – self-ventilated · Frame sizes 100 L to 160 L

Dimensional drawings

Type of construction IM B3

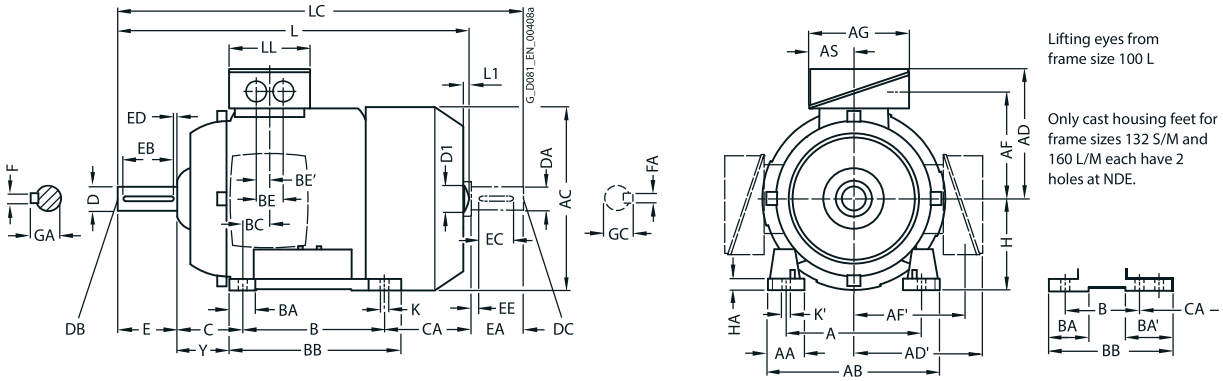

Types of construction IM B5 and IM V1

For flange dimensions, see page 1/59 (**Z** = the number of retaining holes)

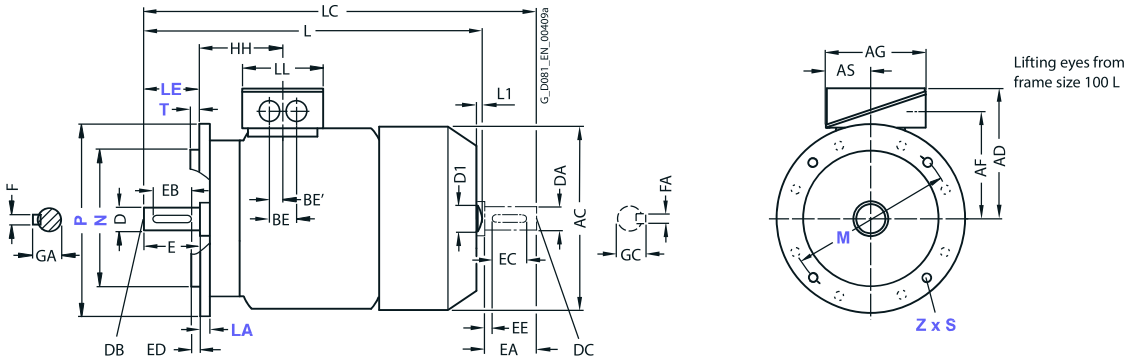

For motor			Dimension designation acc. to **IEC**																					
Frame size	Motor type 1LE1592	No. of poles	A	AA	**AB**	AC	**AD**	AD'	AF	AF'	AG	AS	B	BA	BA'	BB	BC	BE	BE'	C	CA	**H**	HA	Y
100 L	All	2, 4	160	42	**196**	217	**193**	193	147	147	163	80.5	140	48	48	176	37.5	48	24	63	141	**100**	12	45
112 M	All	2, 4	190	46	**226**	239	**195**	195	150	150	163	80.5	140	48	48	176	30	48	24	70	130	**112**	12	52
132 S	All	2, 4	216	53	**256**	281	**214.5**	214.5	169	169	163	80.5	140	52[1]	89[1]	218[2]	26.5	48	24	89	166.5	**132**	15	69
132 M	All	2, 4	216	53	**256**	281	**214.5**	214.5	169	169	163	80.5	178	52[1]	89[3]	218	26.5	48	24	89	128.5	**132**	15	69
160 M	All	2, 4	254	60	**300**	333.5	**265**	265	213	213	190	92	210	73[4]	117[4]	300[5]	37	60	30	108	192	**160**	18	85
160 L	All	2, 4	254	60	**300**	333.5	**265**	265	213	213	190	92	254	73[4]	117[6]	300	37	60	30	108	148	**160**	18	85

[1] With screwed-on feet, this dimension is 41 mm.
[2] With screwed-on feet, this dimension is 180 mm.
[3] With screwed-on feet, this dimension is 79 mm.
[4] With screwed-on feet, this dimension is 51 mm.
[5] With screwed-on feet, this dimension is 256 mm.
[6] With screwed-on feet, this dimension is 95 mm.

© Innomotics 2024

Standard induction motors optimized for converter operation – VSD10 line

Dimensional drawings

Type of construction IM B35

For flange dimensions, see page 1/59 (**Z** = the number of retaining holes)

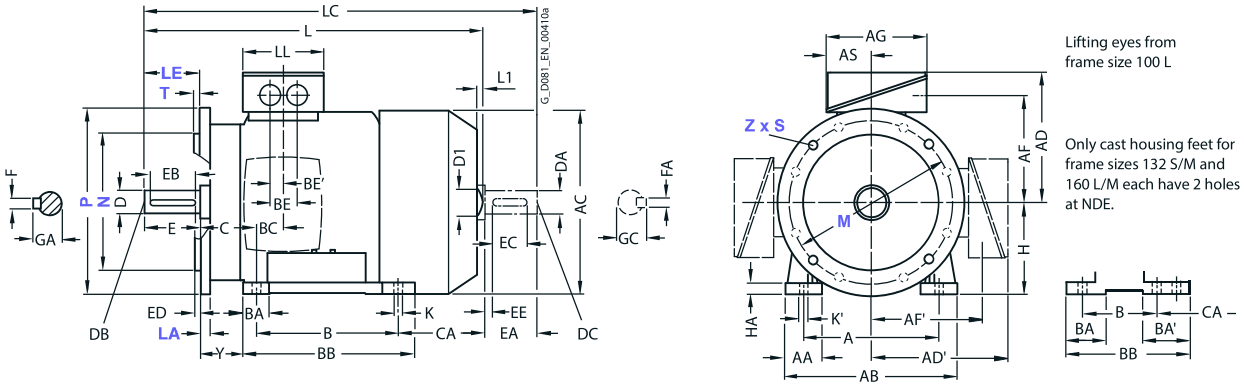

Type of construction IM B14

For flange dimensions, see page 1/59 (**Z** = the number of retaining holes)

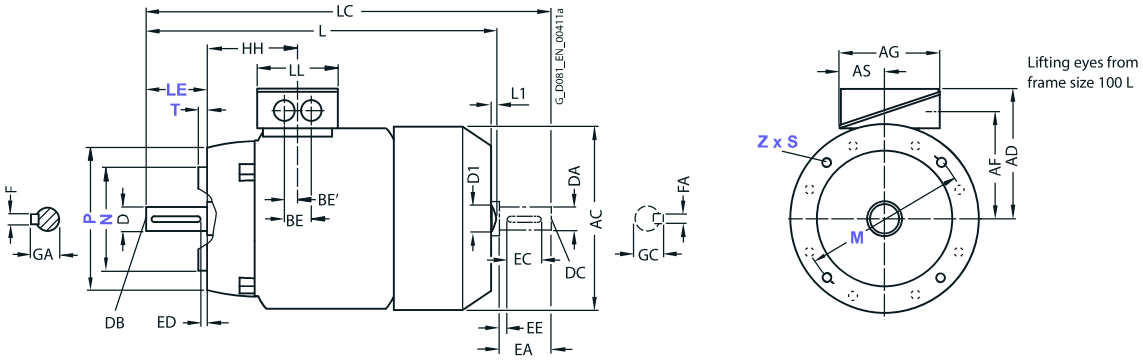

For motor			Dimension designation acc. to **IEC**								DE shaft extension							NDE shaft extension						
Frame size	Motor type 1LE1592	No. of poles	HH	K	K'	**L**	L1	D1	LC	LL	D	DB	E	EB	ED	F	GA	DA	DC	EA	EC	EE	FA	GC
100 L	All	2, 4	100.5	12	16	**397.5**	7	32	454	134	28	M10	60	50	5	8	31	24	M8	50	40	5	8	27
112 M	All	2, 4	100.5	12	16	**390.5**	7	32	450	134	28	M10	60	50	5	8	31	24	M8	50	40	5	8	27
132 S	All	2, 4	115.5	12	16	**466.5**	8.5	39	535.5	134	38	M12	80	70	5	10	41	28	M10	60	50	5	8	31
132 M	All	2, 4	115.5	12	16	**466.5**	8.5	39	535.5	134	38	M12	80	70	5	10	41	28	M10	60	50	5	8	31
160 M	All	2, 4	145	14.5	18	**606**	10	45	730	165	42	M16	110	90	10	12	45	42	M16	110	90	10	12	45
160 L	All	2, 4	145	14.5	18	**606**	10	45	730	165	42	M16	110	90	10	12	45	42	M16	110	90	10	12	45

© Innomotics 2024

Standard induction motors optimized for converter operation – VSD10 line

Standard Efficiency – self-ventilated · Frame sizes 180 M to 250 M

Dimensional drawings

Type of construction IM B3

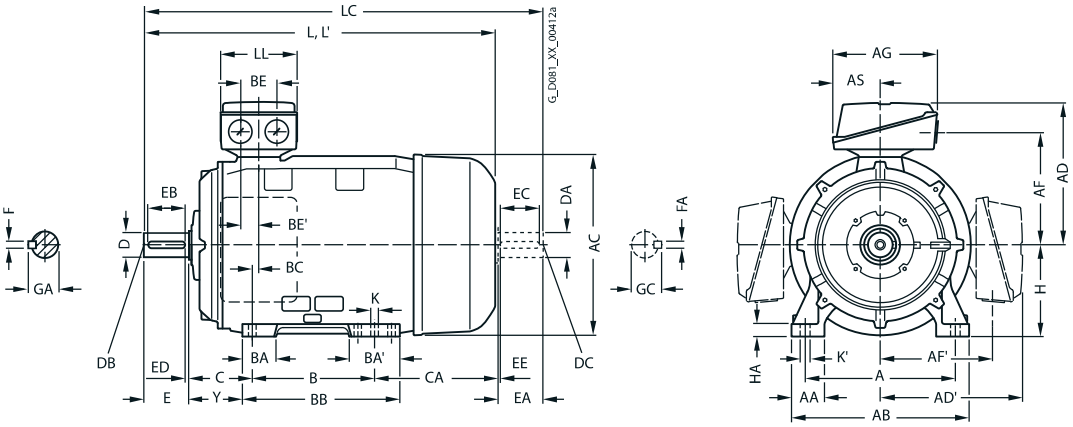

Types of construction IM B5 and IM V1

For flange dimensions, see page 1/59 (**Z** = the number of retaining holes)

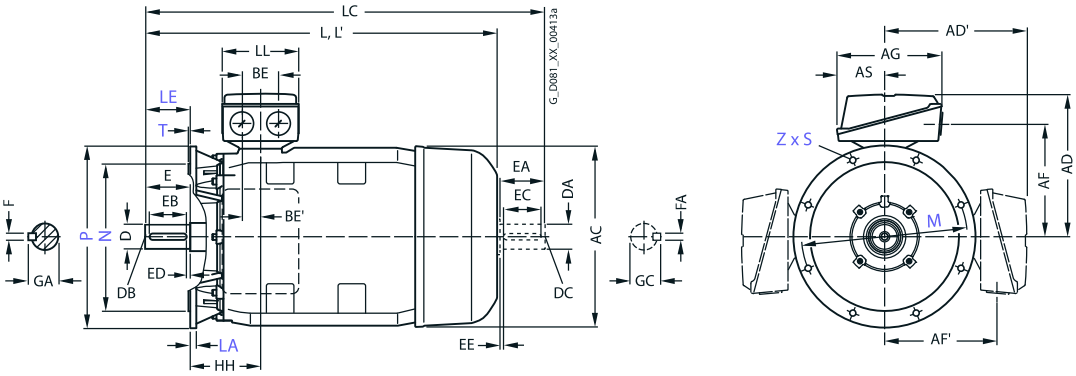

For motor			Dimension designation acc. to **IEC**																		
Frame size	Motor type 1LE1592-	No. of poles	A	AA	**AB**	AC	**AD**	AD´	AF	AF´	AG	AS	B	BA	BA´	BB	BC	BE	BE´	C	CA
180 M	1EA2	2	279	65	**339**	356	**286**	286	234	234	190	92	241	85	120	328	34	60	30	121	202
	1EB2	4											279								
180 L	1EB4	4																			
200 L	2AA4	2	318	70	**378**	396	**315**	315	259	259	266	112	305	104	104	355	31	85	42.5	133	177
	2AA5	2																			
	2AB5	4																			
225 S	2BB0	4	356	80	**436**	449	**338**	338	282	282	266	112	311	92	117	361	15	85	42.5	149	253
225 M	2BA2	2																			
	2BB2	4																			
250 M	2CA2	2	406	100	**490**	497	**410**	410	322	322	319	145	349	102	102	409	24	110	55	168	230
	2CB2	4																			

© Innomotics 2024

Standard induction motors optimized for converter operation – VSD10 line

Dimensional drawings

Type of construction IM B35

For flange dimensions, see page 1/59 (**Z** = the number of retaining holes)

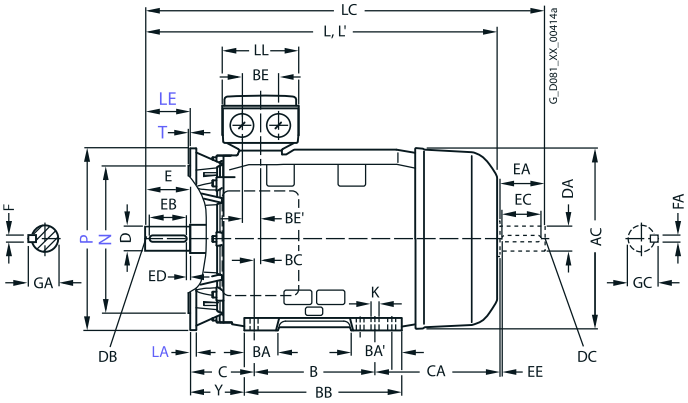

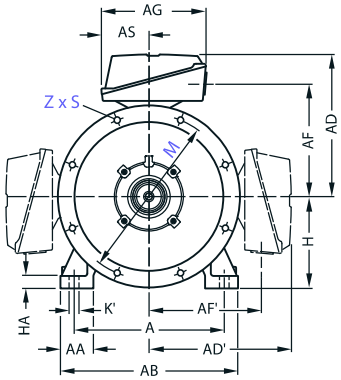

5

For motor			Dimension designation acc. to **IEC**										DE shaft extension							NDE shaft extension						
Frame size	Motor type 1LE1592-	No. of poles	**H**	HA	Y	HH	K	K´	**L**	L´	LC	LL	D	DB	E	EB	ED	F	GA	DA	DC	EA	EC	EE	FA	GC
180 M	1EA2	2	**180**	20	95	155	15	19	**668**	668	784	165	48	M16	110	100	5	14	52	48	M16	110	100	5	14	51.5
	1EB2	4							**698**	698	814															
180 L	1EB4	4																								
200 L	2AA4	2	**200**	25	108	164	19	25	**721**	755	835	197	55	M20	110	100	5	16	59	55	M20	110	100	5	16	59
	2AA5	2																								
	2AB5	4																								
225 S	2BB0	4	**225**	34	124	164	19	25	**788**	–	903	197	60	M20	140	125	10	18	64	55	M20	110	100	5	16	59
225 M	2BA2	2							**818**	852	933		55		110	100	5	16	59	48	M16				14	51.5
	2BB2	4							**848**	–	963		60		140	125	10	18	64	55	M20				16	59
250 M	2CA2	2	**250**	40	138	192	24	30	**887**	924	1002	233	60	M20	140	125	10	18	64	55	M20	110	100	5	16	59
	2CB2	4								–	1032		65						69	60		140	125	10	18	64

© Innomotics 2024

Standard induction motors optimized for converter operation – VSD10 line

Standard Efficiency – self-ventilated · Frame sizes 280 S to 315 L

Dimensional drawings

Type of construction IM B3

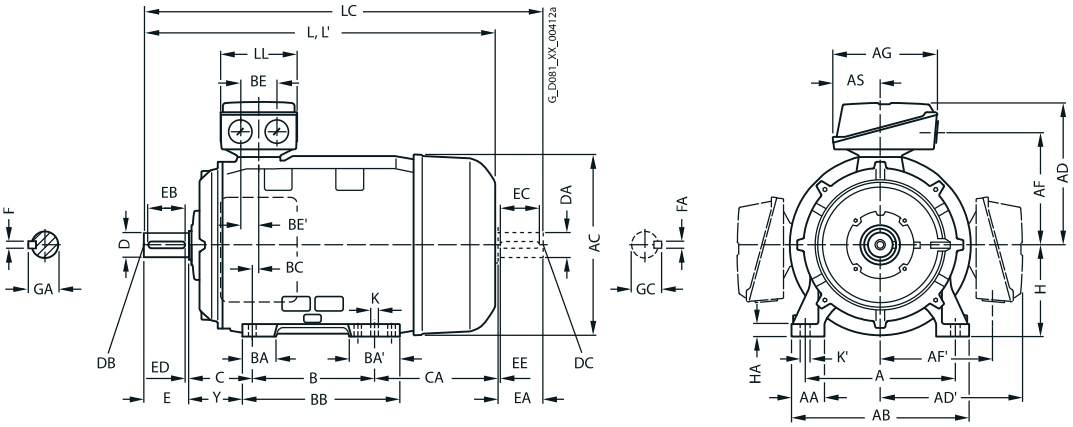

Types of construction IM B5 and IM V1

For flange dimensions, see page 1/59 (**Z** = the number of retaining holes)

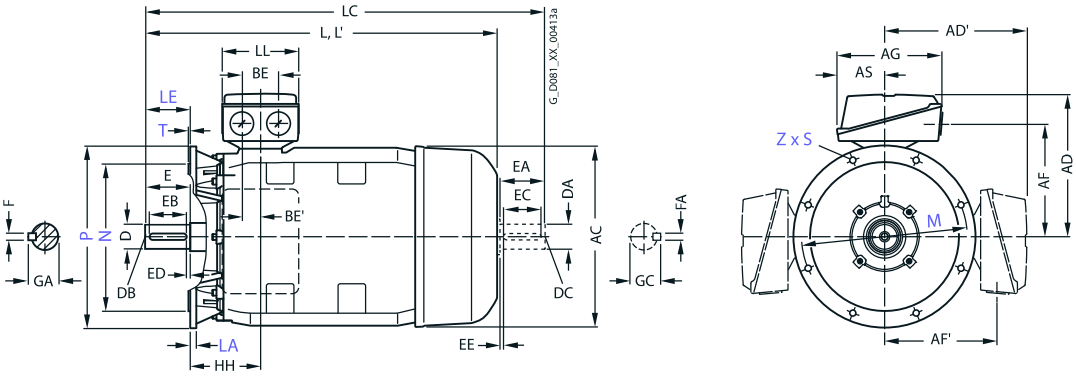

For motor			Dimension designation acc. to **IEC**																		
Frame size	Motor type 1LE1592-	No. of poles	A	AA	**AB**	AC	**AD**	AD´	AF	AF´	AG	AS	B	BA	BA´	BB	BC	BE	BE´	C	CA
280 S	2DA0	2	457	100	**540**	551	**433**	433	345	345	319	145	368	101	152	479	20	110	55	190	267
	2DB0	4																			
280 M	2DA2	2	457	100	**540**	551	**433**	433	345	345	319	145	419	101	152	479	20	110	55	190	216
	2DB2	4																			
315 S	3AB0	4	508	120	**610**	616	**515**	515	404	404	374	164	406	113	170	527	22	110	55	216	295
315 M	3AB2[1]	4	508	120	**610**	616	**515**	515	404	404	374	164	457	113	170	578	22	110	55	216	409
315 L[1]	3AB4	4	508	120	**610**	616	**515**	515	404	404	374	164	508	113	170	578	22	110	55	216	358
	3AB5	4												176	227	648					513

[1] For orders with screwed-on feet (order code **H01**), these screwed-on feet have 3 drilled holes on the NDE side with the dimension B 406 mm, 457 mm, and 508 mm respectively; the dimension BB is 666 mm.

© Innomotics 2024

Standard induction motors optimized for converter operation – VSD10 line

Dimensional drawings

Type of construction IM B35

For flange dimensions, see page 1/59 (**Z** = the number of retaining holes)

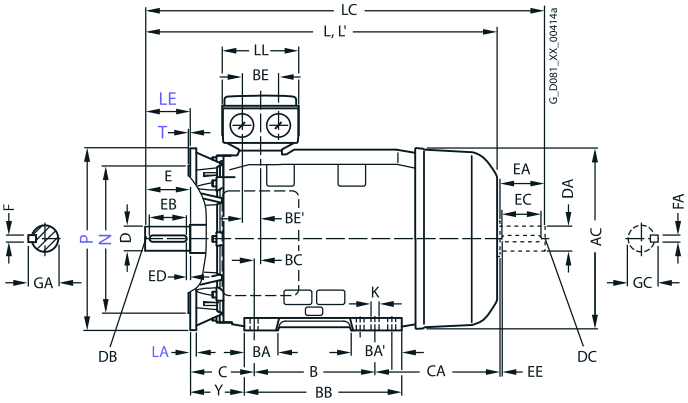

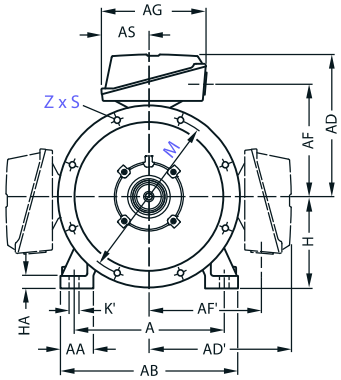

For motor			Dimension designation acc. to **IEC**										DE shaft extension							NDE shaft extension						
Frame size	Motor type 1LE1592-	No. of poles	**H**	HA	Y	HH	K	K´	**L**	L´	LC	LL	D	DB	E	EB	ED	F	GA	DA	DC	EA	EC	EE	FA	GC
280 S	2DA0	2	**280**	40	160	210	24	30	**960**	998	1105	233	65	M20	140	125	10	18	69	60	M20	140	125	10	18	64
	2DB0	4								–			75					20	79.5	65						69
280 M	2DA2	2	**280**	40	160	210	24	30	**960**	998	1105	233	65	M20	140	125	10	18	69	60	M20	140	125	10	18	64
	2DB2	4								–			75					20	79.5	65						69
315 S	3AB0	4	**315**	50	181	238	28	35	**1082**	–	1227	299	80	M20	170	140	25	22	85	70	M20	140	125	10	20	74.5
315 M	3AB2 [1]	4	**315**	50	181	238	28	35	**1247**	–	1392	299	80	M20	170	140	25	22	85	70	M20	140	125	10	20	74.5
315 L [1]	3AB4	4	**315**	50	146	238	28	35	**1247**	–	1547	299	80	M20	170	140	25	22	85	70	M20	140	125	10	20	74.5
	3AB5	4							**1402**																	

[1] For orders with screwed-on feet (order code **H01**), these screwed-on feet have 3 drilled holes on the NDE side with the dimension B 406 mm, 457 mm, and 508 mm respectively; the dimension BB is 666 mm.

© Innomotics 2024

Innomotics XP 1MB1, 1MB5 explosion-protected motors

© Innomotics 2024

6

© Innomotics 2024

© Innomotics 2024

6 Innomotics XP 1MB1, 1MB5 explosion-protected motors

6/2 Orientation

6/28 Article number code

6/30 Zones 21, 22, and 2 with types of protection Ex tb, Ex tc, Ex ec

6/30 IE4 Super Premium Efficiency
6/30 _ Cast-iron series 1MB55 – self-ventilated

6/32 IE3 Premium Efficiency
6/32 _ Aluminum series 1MB10 – self-ventilated
6/34 _ Cast-iron series 1MB15, 1MB16 – self-ventilated
6/38 _ Cast-iron series 1MB15 with increased power
6/39 _ Cast-iron series 1MB55, 1MB58 – self-ventilated

6/42 IE2 High Efficiency
6/42 _ Aluminum series 1MB10 – self-ventilated
6/44 _ Cast-iron series 1MB15, 1MB16 – self-ventilated

6/48 IE1 Standard Efficiency
6/48 _ Aluminum series 1MB10 – self-ventilated

6/69 Zone 1 with type of protection Ex eb

6/69 IE3 Premium Efficiency
6/69 _ Cast-iron series 1MB1543, 1MB1643, 1MB5543, 1MB5643 – self-ventilated

6/56 Zone 1 with types of protection Ex db, Ex db eb

6/56 IE3 Premium Efficiency
6/56 _ Cast-iron series 1MB15.3, 1MB55.3 self-ventilated
6/60 _ Cast-iron series 1MB15.6, 1MB55.6 self-ventilated
6/63 _ Cast-iron series 1MB15.7, 1MB55.7 self-ventilated
6/66 _ Cast-iron series 1MB18.3, 1MB58.3 self-ventilated

6/70 Article No. supplements and special versions

6/70 Voltages
6/75 Types of construction
6/88 Motor protection
6/93 Terminal box position
6/98 Options
6/121 Accessories

6/123 Dimensions

6/123 Notes on the dimensions
6/123 Dimension sheet generator
6/124 Dimensions · Aluminum series Innomotics XP
6/124 IE3 – 1MB1 with types of protection Ex tb, Ex tc, Ex ec – self-ventilated
6/124 _ Frame sizes 80 M to 160 L
6/126 IE2, IE1 – 1MB1 with types of protection Ex tb, Ex tc, Ex ec – self-ventilated
6/126 _ Frame sizes 80 M to 160 L
6/128 Dimensions · Cast-iron series Innomotics XP
IE4, IE3 – 1MB5 with types of protection Ex tb, Ex tc, Ex ec – self-ventilated
6/128 _ Frame sizes 315 bis 450
IE3 – 1MB1 with types of protection Ex tb, Ex tc, Ex ec – self-ventilated
6/133 _ Frame sizes 71 M to 160 L
6/135 _ Frame sizes 180 M to 315 L
IE3 – 1MB1 with type of protection Ex eb – self-ventilated
6/137 _ Frame sizes 71 M to 160 L
6/139 _ Frame sizes 180 M to 280 M
IE3 – 1MB5 with type of protection Ex eb – self-ventilated
6/141 _ Frame sizes 315 S to 315 L
IE3 – 1MB1 with type of protection Ex db, Ex db eb – self-ventilated
6/144 _ Frame sizes 71 M to 160 L
6/146 _ Frame sizes 180 M to 280 M
IE3 – 1MB5 with type of protection Ex db, Ex db eb – self-ventilated
6/148 _ Frame sizes 315 S to 355 L
IE2 – 1MB1 with types of protection Ex tb, Ex tc, Ex ec – self-ventilated
6/150 _ Frame sizes 71 M to 160 L
6/152 _ Frame sizes 180 M to 250 M
6/154 _ Frame sizes 280 S to 315 L

© Innomotics 2024

Innomotics XP 1MB1, 1MB5 explosion-protected motors

Overview

In many industrial and public sectors, explosion protection or explosion hazards are ever-present, e.g. in the chemicals industry, in refineries, on drilling platforms, at gas stations, in feed manufacturing and in sewage treatment plants.

The risk of explosion is always present when gases, fumes, mist or dust are mixed with oxygen in the air in an explosive ratio close to sources of ignition that are able to release the so-called minimum ignition energy.

In the chemical and petrochemical industries in particular, when crude oil and natural gas are transported, or in mining, milling (e.g. grain and granular solids), this can result in serious injury to persons and damage to equipment.

To ensure maximum safety in these areas, legislators in most countries have implemented appropriate stipulations in the form of laws and regulations based on national and international standards.

Explosion-protected equipment is designed such that an explosion can be prevented when it is used properly.

The explosion-protected equipment can be designed in accordance with various types of protection.

The local conditions must be subdivided into specified zones by the user with the assistance of the responsible authorities in accordance with the frequency of occurrence of an explosion hazard. Device (equipment) categories are assigned to these zones. The zones are then subdivided into possible types of protection and therefore into possible equipment (product) types.

Classification of zones

Areas subject to explosion hazard are divided into zones. Division into zones depends on the chronological and geographical probability of the presence of a hazardous, potentially explosive atmosphere. Information and specifications for classification of the zones are laid down in the following standards:

- IEC/EN 60079-10-1 for gas atmospheres
- IEC/EN 60079-10-2 for dust atmospheres

Further, a distinction is made between various explosion groups as well as temperature classes and these are included in the hazard assessment.

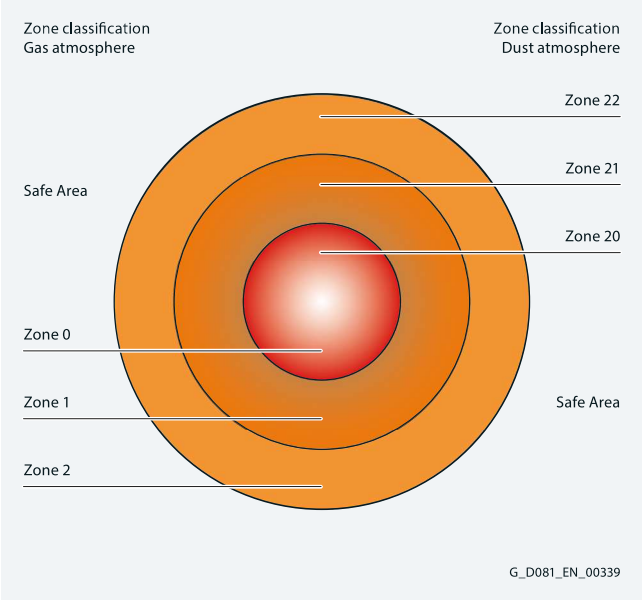

Depending on the particular zone and therefore the associated hazard, operating equipment must comply with defined minimum requirements regarding the type of protection. The different types of protection require corresponding measures to prevent ignition that should be implemented at the motor in order to prevent a surrounding explosive atmosphere from being ignited.

© Innomotics 2024

Overview

Zone Gas [1) 2)]	Zone Dust [1) 2)]	Zone definition acc. to IEC/EN 60079-10-1 for gas atmospheres IEC/EN 60079-10-2 for dust atmospheres	Assigned types of protection	Category acc. to 2014/34/EU	Equipment protection level acc. to IEC/EN 60079-0
0	–	An area in which an explosive gas atmosphere is present **continuously, over a long period** or **frequently**.	Low-voltage motors not permitted	1	Ga
1	–	An area in which it is expected that an explosive gas atmosphere will be present **occasionally** during normal operation.	Ex eb, Ex db eb; Ex db	2	Gb
2	–	An area in which it is expected that an explosive gas atmosphere will be present only **rarely** and then only **for a short period** during normal operation.	Ex ec	3	Gc
–	20	An area in which there is an explosive gas atmosphere comprising a dust-air mixture **continuously**, **over long periods** or **frequently**.	Low-voltage motors not permitted	1	Da
–	21	An area in which it is expected that an explosive gas atmosphere comprising a dust-air mixture will be present **occasionally** during normal operation.	Ex tb [3)]	2	Db
–	22	An area in which it is expected that an explosive gas atmosphere in the form of a cloud of combustible dust in air will be present only **rarely** and then only **for a short period** during normal operation.	Ex tc [4)]	3	Dc

Overview of standards for explosion protection

The explosion-protected three-phase motors comply with European standards. The European standards are recognized by all member states of CENELEC (European Committee for Electrotechnical Standardization). The national electrotechnical committees of Austria, Belgium, Czech Republic, Denmark, Finland, France, Germany, Greece, Iceland, Ireland, Italy, Luxembourg, Netherlands, Norway, Spain, Sweden, Switzerland, Portugal, and United Kingdom (UK) are members of CENELEC.

Title	European standard
General provisions	EN 60079-0
Flameproof enclosure "d"	EN 60079-1
Increased safety "e"	EN 60079-7
Zone classification (gases, vapors, mist)	EN 60079-10-1
Zone classification (dust)	EN 60079-10-2
Intrinsic safety "i"	EN 60079-11
Electrical equipment in potentially explosive atmospheres (gases, vapors, mist)	EN 60079-14
Maintenance of Ex equipment	EN 60079-17
Intrinsically safe electrical systems	EN 60079-25
Equipment "Dust" (dust explosion protection by housing) "t"	EN 60079-31
Basic concepts and methodology	EN 1127-1

1) Motors of
- Zone 1 can also be used in Zone 2
- Zone 21 can also be used in Zone 22

2) Motors that are certified for gas or dust protection must not be used in hybrid mixtures! Hybrid mixtures are mixtures of flammable dusts with explosive gas/air atmospheres which can together create a dangerous explosive atmosphere if they occur at the same time. It is necessary for a competent assessor to determine and release in the individual case whether the parameters determining ignition are unfavorably affected in a particular hybrid mixture. Information on operation in hybrid mixtures is provided in IEC 60079-14.

3) Innomotics XP motors with type of protection Ex tb are intended for group IIIC as a general rule, i.e. they are permitted for operation in environments with conductive and non-conductive dust.

4) Innomotics XP motors with type of protection Ex tc are intended for group IIIB as a general rule, i.e. they are not permitted for operation in environments with conductive dust.

© Innomotics 2024

Innomotics XP 1MB1, 1MB5 explosion-protected motors

Overview

Temperature classes and groups

Combustible gases and vapors are divided into temperature classes according to their ignitability and into groups according to their spark ignition capacity. The marking of a three-phase motor with the codes for the type of protection, group and temperature class specifies that it can be used without danger in hazardous areas depending on the zone classification. The numerical sequence of the codes for the group and temperature class has been selected so that motors that satisfy the requirements for a certain group and temperature class also satisfy the requirements for lower groups and classes.

Temperature classes

Temperature class of electrical equipment	Maximum surface temperature of electrical equipment	Ignition temperature of gases or vapors
T1	450 °C	> 450 °C
T2	300 °C	> 300 °C
T3	200 °C	> 200 °C
T4	135 °C	> 135 °C
T5	100 °C	> 100 °C
T6	85 °C	> 85 °C

Examples of the assignment of combustible gases and vapors

Group	Temperature classes											
	T1		T2		T3		T4		T5		T6	
	Material designation	Ignition temperature °C	Material designation	Ignition temperature °C	Material designation	Ignition temperature °C	Material designation	Ignition temperature °C	Material designation	Ignition temperature °C	Material designation	Ignition temperature °C
IIA [1]	Acetone	540	i-Amyl acetate	380	Naphthas		Acetaldehyde	140				
	Ethane	515	n-Butane	365	Petrol fuels	[2]						
	Ethyl acetate	460	n-Butyl alchohol	340	Mineral spirits	[2]						
	Ethyl chloride	510	Cyclohexanone	430	Diesel fuels	[2]						
	Ammonia	630	1,2-Dichloroethane	440	Heating oils	[2]						
	Benzene	555	Acetic anhydride	330	n-Hexane	240						
	Acetic acid	485										
	Carbon monoxide	605										
	Methane	595										
	Methanol	455										
	Methyl chloride	625										
	Naphtalene	520										
	Phenol	595										
	Propane	470										
	Toluene	535										
IIB [1]	Coal gas (town gas)	560	Ethanol	425	Hydrogen sulfide	270	Ethyl ether	180				
			Ethylene	425								
			Ethylene oxide	440								
IIC [1]	Hydrogen	560	Acetylene	305							Carbon disulfide	95

Explosion Protection Directive 2014/34/EU

Explosion protection has been fully harmonized by Directive 2014/34/EU in Germany and in the other member states of the European Union. The requirements of the new law came into force on April 20, 2016. Since then only those devices and protection systems that comply with Directive 2014/34/EU are permitted to be placed on the market.

Directive 2014/34/EU and Directive 1999/92/EC specify that only specific electrical equipment and devices are permitted to be used in the zones. The devices are assigned to equipment groups and categories.

Use of electrical equipment in accordance with EN 60079-14

Electrical equipment used in potentially explosive workshops and storage areas must comply with EN 60079-14/ VDE 0165-1 "Explosive atmospheres - Part 14: Electrical installations design, selection and erection". All other general regulations issued by the responsible supervisory authorities and the Employer's Liability Insurance Association or any specifically issued for individual case are also applicable. A plant or system subject to inspection is not permitted to be commissioned initially or following a significant modification until the plant or system has been inspected by an approved inspection agency for correctness of assembly, installation, site conditions and safe operation, taking into account the intended mode of operation. Devices compliant with Directive 2014/34/EU are permitted to be commissioned in accordance with the responsible supervisory authority. (cf. German Health and Safety at Work Regulations (BetrSichV), section 3, § 14)

[1] Subgroups IIA, IIB and IIC must be specified for the types of protection Ex db, Ex eb and Ex ec described in this list in accordance with EN 60079-0.

[2] The minimum ignition temperature depends on the composition and lies between 220 to 300 °C, over 300 °C in special cases.

© Innomotics 2024

Overview

Device marking

The equipment group and category are specified in the device marking.

The device marking is defined as follows:

e.g. CE 1026 Ex II 2G Ex eb IIC T3 Gb

- **CE** conformity marking
  CE stands for "Communautés Européennes" (European Communities)
  The manufacturer of the explosion-protected devices declares by means of CE marking that the relevant product has been manufactured in accordance with all applicable regulations and requirements of the EU and the requirements laid down in Directive 2014/34/EU and the product has been subjected to the relevant conformity evaluation process.
- **0158** identification number of the inspecting authority (DEKRA)
- Ex Marking for prevention of explosions in accordance with Directive 2014/34/EU

Example "increased safety":	**CE**	**1026**	**Ex**	**II**	**3**	**G**	**Ex**	**ec**	**IIC**	**T3**	**Gc**
CE marking											
Number of the certifying "notified" body (1026 = FTZÚ)											
Explosion protection marking											
Equipment group: I = Underground II = All other areas											
Category: 2 (Zone 1/21) 3 (Zone 2/22)											
Ex atmosphere G = Gas D = Dust											
Explosion-protected equipment											
Type of protection Ex db, db eb, eb, ec, tb or tc (db eb = motor housing Ex db with terminal box Ex eb)											
Explosion group and explosion subgroup II = Gas (IIA, IIB or IIC) III = Dust (IIIA, IIIB or IIIC)											
Temperature class with max. surface temperature T1 = 450 °C T4 = 135 °C T2 = 300 °C T5 = 100 °C T3 = 200 °C T6 = 85 °C											
Equipment protection level (G = Gas; D = Dust): Ga = Very high protection, Da = Very high protection, Gb = High protection, Db = High protection, Gc = Increased protection, Dc = Increased protection											

© Innomotics 2024

Innomotics XP 1MB1, 1MB5 explosion-protected motors

Overview

Overview of Innomotics XP 1MB1, 1MB5 explosion-protected motors

The table below contains a complete overview of our products, their types of protection and the assignment of motor types to categories. It is important to note that depending on whether the motor is used for converter operation or line operation, different order codes are required for unique selection of the required product.

Sector	Cate-gory	Zone	Frequency of occurrence of the Ex atmosphere	Type of protection	Temperature class	Equip-ment protec-tion level	Degree of pro-tection	Motor type and if applicable order code	Operation	Order code	Utilization acc. to tempera-ture class	Standard
Gases and vapors (G)	1G	0	constantly or long-term	Not admissible with low-voltage motors								
	2G	1	occasionally	Ex db eb IIC [1] (flameproof enclosure)	T1 – T4	Gb	IP55	1MB1.5, 1MB5.5	Line	–	130 (B)	IEC/EN 60079-0 IEC/EN 60079-1 IEC/EN 60079-7
									Converter	**B43** **B44**	130 (B) 155 (F)	
								1MB1.,6 1MB5.6				
				Ex eb IIC [1] (increased safety)	T1 – T3			1MB1.4, 1MB5.4	Line	–	130 (B)/ 155 (F) [2]	IEC/EN 60079-0 IEC/EN 60079-7
	3G	2	rarely or for a short period	Ex ec IIC [1] (increased safety)		Gc		1MB103, 1MB153, 1MB163	Line	–	130 (B)	
									Converter	**B40** **B41+** **B43**		
Dust (D)	1D	20	constantly or long-term	Not admissible with low-voltage motors								
	2D	21	occasionally	Ex tb IIIC [1]: Conductive and non-conductive dust	Max. housing temperature T120 °C [4]	Db	IP65	1MB101, 1MB151, 1MB161	Line	–	130 (B)	IEC/EN 60079-0 IEC/EN 60079-31
									Converter	**B40** **B41+** **B43**		
	3D	22	rarely or for a short period	Ex tc IIIB [1]: non-conductive dust		Dc	IP55	1MB102, 1MB152, 1MB162				
Gases and vapors (G) and dusts (D) [3]	2G 2D	1 or 21	occasionally	Ex db eb IIC [1] Ex db eb IIB +B32 (flameproof enclosure)/ Ex tb IIIC [1]: Conductive and non-conductive dust	T1 – T4/ Max. housing temperature T130 °C	Gb Db	IP65	1MB1.5 +B32, 1MB5.5 +B32	Line	–	130 (B)	IEC/EN 60079-0 IEC/EN 60079-1 IEC/EN 60079-31
									Converter	**B43** **B44**	130 (B) 155 (F)	
	2G 3D	1 or 22	Gas: occasionally dust: rarely or for a short period	Ex db eb IIC lameproof enclosure)/ Ex tc IIIB: Non-conductive dust		Gb Dc	IP55	1MB1.5 + B30 1MB5.5 + B30	Line	–	130 (B)	
									Converter	**B43** **B44**	130 (B) 155 (F)	
				Ex db eb IIB lameproof enclosure)/ Ex tc IIIB: Non-conductive dust				1MB1.6 + B30 1MB5.6 + B30				
	2G 2D	1 or 21	occasionally	Ex eb IIC (increased safety)/ Ex tb IIIC: Conductive and non-conductive dust	T1 – T3/ Max. housing temperature T130 °C	gb Db	IP65	1MB1.4 + B32	Line	–	130 (B)	
	3G 3D	2 or 22	rarely or for a short period	Ex ec IIC [1] (increased safety)/ Ex tc IIIB: non-conductive dust	T1 – T3/ Max. housing temperature T120 °C [4]	Gc Dc	IP55	1MB103 +B30 1MB153 +B30 1MB163 +B30	Line	–	130 (B)	IEC/EN 60079-0 IEC/EN 60079-7 IEC/EN 60079-31
									Converter	**B40** **B41+** **B43**		

[1] Highest explosion group IIC includes IIB and IIA.
IIIA stands for lint, IIIB for non-conductive dust and IIIC for conductive dust. 1MB1.5, 1MB5.5 motors optionally with Ex db terminal box.

[2] See EU type-examination certificate.

[3] Motors that are certified for gas or dust protection must not be used in hybrid mixtures! Hybrid mixtures are mixtures of flammable dusts with explosive gas/air atmospheres which can together create a dangerous explosive atmosphere if they occur at the same time. It is necessary for a competent assessor to determine and release in the individual case whether the parameters determining ignition are unfavorably affected in a particular hybrid mixture. Information on operation in hybrid mixtures is provided in IEC 60079-14.

[4] For 1MB1 IE1: T140 °C
IE2: T120 °C (except T130 °C for 1MB1.11-1AD5, 1MB1.11-3AD6, 1MB1.21-1AD5 and 1MB1.21-3AD6)
IE3: T120 °C.
For 1MB5 frame sizes 400 and 450: T125 °C.

© Innomotics 2024

Benefits

The explosion-protected motors from Innomotics offer the user numerous advantages:

- The motors are designed and constructed in accordance with Directive 2014/34/EU. As product supplier, Innomotics accepts responsibility for compliance with the applicable product standards for the selected equipment.
- By using this product, the plant operating company complies with Directive 1999/92/EC in accordance with Appendix II B (ATEX 137 previously ATEX 118a). The plant manufacturer or plant operating company is responsible for correct selection and proper usage of the equipment.
- Comprehensive series of Ex motors for protection against gas and dust.
- Individual versions of motors are possible thanks to the numerous catalog options.
- Further special versions are possible on request.
- Declarations of compliance with the order 2.1 are available for a defined spectrum of Siemens motors/converters.
- The operating instructions are available in all official EU languages as well as Russian, Turkish and Chinese for downloading.
- Printed safety notes in German/English are supplied as standard with each motor.
- Certificates:
  ATEX, IECEx, CCC-Ex, EACEx, PESO
- VIK design (see chapter 1 page 1/23)

For applications in harsh environments:
Innomotics XP motors with a cast-iron housing

The right motor for various challenges

The following motor series are available with cast-iron housings for applications in harsh, hazardous environments:

- Basic Line:
  Rugged, reliable motors for machine construction
- Performance Line:
  Motors for the process industry with reinforced bearings and a more rugged coating – for requirements that extend beyond the Basic Line

Comparison: Basic Line versus Performance Line

Function	**Basic Line – 1MB15**	**Performance Line – 1MB16**
Bearing size	62, 63 from frame size 280 upwards	63
Relubrication	Optional, standard from frame size 280 upwards	Standard from frame size 160 upwards, optional for frame sizes 100 to 132
Paint system	Standard paint finish, corrosivity category C2	Special paint finish, corrosivity category C3
Drainage	Drain plug from frame size 100 upwards	Drain plug from frame size 100 upwards
Rating plate made of stainless steel	Standard from frame size 225 upwards, optional for frame sizes 71 to 200	Standard from frame size 100 upwards
Motor protection	Optional	PTC
Fan cover	Steel	Steel
Warranty	12 months	36 months

Application

The explosion-protected motors are used in the following sectors to prevent explosion hazards that result in serious injury to persons and severe damage to equipment.

- Chemical and petrochemical industry
- Production of mineral oil and gas
- Gas works
- Gas utility companies
- Gas stations
- Coking plants
- Mills (e.g. grain, solids)
- Sewage treatment plants
- Wood processing (e.g. sawdust, tree resin)
- Other industries subject to explosion hazards

Innomotics XP CHEMSTAR - industry-specific motor solution for Chemie, Petrochemie, Oil & Gas
see chapter 1 page 1/23

Technical specifications

General information

Ex motors are suitable for operation in electrical power systems with a voltage tolerance of ± 10 % according to EN 60034-1.

Ex motors in vertical type of construction with shaft extension pointing down must have a protective cover.

Standard certificate: EU type-examination certificate (ATEX), installation declaration and EU declaration of conformity, optionally IECEx, CCC-Ex and EACEx, PESO.

Note:
For all explosion-protected motors, designs according to UL and CSA are not possible.

Printed safety notes are supplied as standard with explosion-protected motors. Operating instructions are also available in all official EU languages as well as in Russian, Turkish, and Chinese.

Ambient temperature

- Standard:–20 to +40 °C
- Optional:–40 to +40 °C (order code **D03**)
- Optional:–20 to +60 °C (order codes **N05**, **N06**, **N07**, **N08**)
- Optional:–55 to +40 °C (order code **D05**)

From 40 °C, the power is reduced. Other temperatures are available on request.

Note on Ex eb (1MB1.4):
Order codes **N05**, **N06**, **N07**, **N08** currently on request.

Motor connection

1MB1 and 1MB5 motors must be sealed with certified cable glands or sealing plugs.

The certificates for the motors for hazardous areas are stored with the documentation in the SPC.

Certified motor protection switches/tripping units must always be used for motor protection, see Catalog IC 10.

© Innomotics 2024

Innomotics XP 1MB1, 1MB5 explosion-protected motors

Technical specifications

Type of protection "Dust explosion protection" Ex tb, Ex tc acc. to IEC/EN 60079-31 for use in Zone 21, Zone 22.

The types of protection **Ex tb** and **Ex tc** apply to electrical equipment protected using a housing and with limited surface temperature for use in areas in which combustible dust can be present in concentration levels that could cause a fire or an explosion.

Measures are taken to prevent impermissibly high temperatures and to prevent sparks or arcs from occurring on external components of the motor.

Ex tb motors are used in areas where it is expected that an explosive atmosphere comprising dust/air mixtures will be present occasionally and for a short period.
These motors are assigned to Equipment Group II – Category 2D (corresponding to Zone 21). Innomotics XP motors with type of protection Ex tb are intended for group IIIC, i.e. they are permitted for operation in environments with conductive and non-conductive dust.

Ex tc motors are used in areas where it is expected that a potentially-explosive atmosphere will be caused by dust that is stirred up. If this does occur, in all probability rarely and for a short period. These motors are assigned to Equipment Group II – Category 3D (corresponding to Zone 22).
Innomotics XP motors with type of protection Ex tc are intended for group IIIB as a general rule, i.e. they are permitted for operation in environments with non-conductive dust.

Ex tb IIIC T120 °C Gb for use in Zone 21:

Design for Zone 21, as well as Zone 22 for conductive dust (degree of protection: IP65) equipment category 2D. Motors Ex tb IIIC T120 °C Db [1]: 1MB1.1 and 1MB5.1 are suitable for use in explosive dust atmospheres with conductive or non-conductive dust that are present occasionally (Zone 21) or rarely (Zone 22). For rated operation, the surface temperature is 120 °C [1].

Ex tc IIIB T120 °C Gc for use in Zone 22:

Version for Zone 22 with non-conductive dust (degree of protection IP55) equipment category 3D. Motors Ex tc IIIB T120 °C Dc [1]: 1MB1.2 and 1MB5.2 are suitable for use in explosive dust atmospheres with non-conductive dust that are present rarely (Zone 22). For rated operation, the surface temperature is 120 °C [1].

For use in Zone 22 and in combination with conductive dust (e.g. carbon dust), the motor for Zone 21 must be selected.

The motors have a terminal box, a sealing system, an external grounding terminal, a metal fan cover and a metal external fan according to standard IEC/EN 60079-0.

Identification on the rating plate:
- Zone 21: Ex II 2D Ex tb IIIC T120 °C Db [1]
- Zone 22: Ex II 3D Ex tc IIIB T120 °C Dc [1]

Number of the EU type-examination certificate

Pole-changing versions:
- Ex tb (Zone 21): Not possible
- Ex tc (Zone 22): Possible on request.

[1] IE1: T140 °C
IE2: T120 °C (except T130 °C for 1MB1.11-1AD5, 1MB1.11-3AD6, 1MB1.21-1AD5 and 1MB1.21-3AD6)
IE3: T120 °C

© Innomotics 2024

Technical specifications

Type of protection "increased safety" Ex ec acc. to IEC/EN 60079-7 for use in Zone 2

Type of protection **Ex ec** ensures that a motor in normal operation as well as when operated under deviating conditions as specified in the standard is not able to ignite a surrounding explosive gas atmosphere. The maximum surface temperature that can occur during operation must be below the limit temperature of the temperature class marked on the motor, e.g. T3.

Measures are taken to prevent impermissibly high temperatures and to prevent sparks or arcs from occurring on the inside and on external components of the motor.

Motors with type of protection **Ex ec** are used in an explosive atmosphere where this atmosphere is expected to reach a level that poses a risk **only rarely** and then also **only for a short period.** These motors are assigned to Equipment Group II – Category 3G (corresponding to Zone 2).

Ex ec motors can additionally optionally have type of protection Ex tc with Group IIIB (non-conductive dust) acc. to IEC/EN 60079-31 for use in Zone 22 (present rarely).

Ex ec IIC T3 Gc

→ Standard version for paint film thicknesses < 200 µm.

Optional **Ex ec IIB T3 Gc** (order code **B31**)
→ Optional version for paint film thicknesses > 200 µm to < 2 mm.

For further information about paint and paint film thicknesses, see page 1/15 onwards.

Optional type of protection **Ex ec**/**Ex tc** for use in Zone 2/22 [1)]

The motors must be ordered with:

Version additionally for dust Ex tc - Zone 22 –
order code **B30** [1)]

Motors

_ Ex ec IIC T3 Gc: 1MB1.3 and 1MB5.3

_ Ex ec IIB T3 Gc: 1MB1.3 and 1MB5.3 (order code **B31**)

have a terminal box (similar to Ex eb), a sealing system, an external grounding terminal and a metal fan cover according to standard IEC/EN 60079-0. The temperature class is T1-T3.

With optional order with order code **B30** additionally a metal external fan.

The combination **B30**+**B31** is possible.

identification on the rating plate:

_ Zone 2: Ex II 3G Ex ec IIC T3 Gc

_ Zone 2/22: Ex II 3G Ex ec IIC T3 Gc
Ex II 3D Ex tc IIIB T120 °C Dc [1)]

Number of the EU type-examination certificate

Please inquire in the case of:

_ Utilization according to temperature class 155 (F)

_ For pole-changing versions

[1)] Motors that are certified for gas or dust protection must not be used in hybrid mixtures! Hybrid mixtures are mixtures of flammable dusts with explosive gas/air atmospheres which can together create a dangerous explosive atmosphere if they occur at the same time. It is necessary for a competent assessor to determine and release in the individual case whether the parameters determining ignition are unfavorably affected in a particular hybrid mixture. Information on operation in hybrid mixtures is provided in IEC 60079-14.

© Innomotics 2024

Innomotics XP 1MB1, 1MB5 explosion-protected motors

Technical specifications

Type of protection "increased safety“ Ex eb acc. to IEC/EN 60079-7 for use in Zone 1

With type of protection **Ex eb**, additional measures are taken to prevent the possibility of high temperatures and to prevent sparks or arcs from occurring on the inside and on external components of the motor.

In case of a malfunction, the drive must be switched off within the time t_E. This ensures that none of the motor's components reaches the ignition temperature of the surrounding gas in the event of a malfunction. The t_E time is the time interval in seconds within which an AC rotor or the stator winding heats up to its limit temperature through the locked-rotor current IA from the temperature in the rated operation with the highest permissible ambient temperature.

Motors with type of protection **Ex eb** are used in an explosive atmosphere where a hazardous explosive atmosphere is expected occasionally to reach a level that poses a risk. These motors are assigned to Equipment Group II – Category 2G (corresponding to Zone 1). They ensure a high degree of safety.

Optionally Ex eb motors can additionally have type of protection Ex tb with Group IIIC (conductive and non-conductive dust) acc. to IEC/EN 60079-31 for use in Zone 21 (occasionally present).

Ex eb IIC T3 Gb

→ Standard version for paint film thicknesses < 200 µm.

Optional Ex eb IIB T3 Gb (order code **B31**)

→ Optional version for paint film thicknesses > 200 µm to < 2 mm.

For further information about paint and paint film thicknesses, see page 1/15 onwards.

Optional type of protection Ex eb/Ex tb for use in Zone 1/21 [2)]

The motors must be ordered with:

Version additionally for dust Ex tb - Zone 21 – order code **B32** [2)]

Motors

- Ex eb IIC T3 Gb: 1MB1.4 and 1MB5.4
- Ex eb IIB T3 Gb: 1MB1.4 and 1MB5.4 (order code **B31**)

have a terminal box (Ex eb), a sealing system, an external grounding terminal and a metal fan cover according to standard IEC/EN 60079-0. The winding is specially designed and tested for the temperature class T1/T2 or T3.

With optional order with order code **B32** additionally a metal external fan.

The combination **B32**+**B31** is possible.

Identification on the rating plate:

- Zone 1: Ex II 2G Ex eb IIC T3 Gb
- Zone 1/21: Ex II 2G Ex eb IIC T3 Gb
  Ex II 2D Ex tb IIIC T120 °C Db [1)]

Number of the EU type-examination certificate

Please inquire in the case of:

- Increased coolant temperatures
- Marine certificates

[1)] IE1: T140 °C
IE2: T120 °C (except T130 °C for 1MB1.11-1AD5, 1MB1.11-3AD6, 1MB1.21-1AD5 and 1MB1.21-3AD6)
IE3: T120 °C

[2)] Motors that are certified for gas or dust protection must not be used in hybrid mixtures! Hybrid mixtures are mixtures of flammable dusts with explosive gas/air atmospheres which can together create a dangerous explosive atmosphere if they occur at the same time. It is necessary for a competent assessor to determine and release in the individual case whether the parameters determining ignition are unfavorably affected in a particular hybrid mixture. Information on operation in hybrid mixtures is provided in IEC 60079-14.

© Innomotics 2024

Technical specifications

Type of protection "flameproof enclosure" Ex db eb and Ex db acc. to IEC/EN 60079-1 for use in Zone 1

Type of protection **Ex db** is achieved by ensuring that any explosion is contained within the motor. The housing must resist the pressure of the explosion and also prevent ignition from the internal to the external atmospheres.

Motors with type of protection **Ex db** are used in an explosive atmosphere where a hazardous explosive atmosphere is expected occasionally to reach a level that poses a risk. These motors are assigned to Equipment Group II – Category 2G (corresponding to Zone 1). They ensure a high degree of safety.

To define the risk posed by a potentially explosive gas, the minimum ignition temperature of a dust cloud is required as well as details of the possibility of a flame exiting through a narrow slit in the motor housing. This is achieved by classification in explosion groups IIA, IIB and IIC, whereby IIC represents the highest requirements (see the table "Assignment of combustible gases and vapors").

Ex db eb IIC T4 Gb

→ Standard version for paint film thicknesses < 200 µm.

Ex db eb IIB T4 Gb or Ex db eb IIC with order code **B31**

→ Optional version for paint film thicknesses > 200 µm to < 2 mm.

Alternatively, a paint finish certified in accordance with the Ex Directive can be used. For further information about paint and paint film thicknesses, see page 1/15 onwards.

Optional type of protection

- **Ex db eb/Ex tb** for use in Zone 1/21 [1)]
- **Ex db eb/Ex tc** for use in Zone 1/22 [1)]

The motors must be ordered with:

- Version additionally for dust Ex tb IIIC - Zone 21 – order code **B32** [1)]
- Version additionally for dust Ex tc IIIB - Zone 22 – order code **B30** [1)]

Motors

- Ex db eb IIC T4 Gb: 1MB1.5 and 1MB5.5
- Ex db eb IIB T4 Gb: 1MB1.5 and 1MB5.5 with order code **B31**
- Ex db eb IIB T4 Gb: 1MB1.6 and 1MB5.6

are suitable for use in explosive gas atmospheres with occasionally present gases or vapors in Zone 1 for temperature classes T1 to T4. The maximum surface temperature that can occur during operation must lie below the limit temperature of the respective temperature class.

The motors have a terminal box (Ex eb), optional Ex db (order code **R48**), a sealing system, an external grounding terminal and a metal fan cover according to standard IEC/EN 60079-0. The motor housing is designed with type of protection "flameproof enclosure" and has temperature class T4.

With optional order with order code **B30** and **B32** additionally a metal external fan.

The combination **B32**+**B31** is possible.

Example of identification on the rating plate:

- Zone 1: Ex II 2G Ex db eb IIC T4 Gb or
  Ex II 2G Ex db IIC T4 Gb (R48)
- Zone 1/21: Ex II 2G Ex db eb IIC T4 Gb
  Ex II 2D Ex tb IIIC T130 °C Db [1)]

Number of the EU type-examination certificate

[1)] Motors that are certified for gas or dust protection must not be used in hybrid mixtures! Hybrid mixtures are mixtures of flammable dusts with explosive gas/air atmospheres which can together create a dangerous explosive atmosphere if they occur at the same time. It is necessary for a competent assessor to determine and release in the individual case whether the parameters determining ignition are unfavorably affected in a particular hybrid mixture. Information on operation in hybrid mixtures is provided in IEC 60079-14.

© Innomotics 2024

Innomotics XP 1MB1, 1MB5 explosion-protected motors

Technical specifications

Line operation

Insulation system

The insulation system of Innomotics XP 1MB1 and 1MB5 motors is suitable for line voltages up to 690 V. The connection system (terminal box, terminals) is also designed for this rated voltage.

The motors are equipped with 6 terminals. They can therefore be operated in any star or delta connection. If a voltage variant with dual voltage e.g. 400VΔ/690VY is selected, the rated data of all voltage levels will be stamped on the rating plate.

Innomotics XP 1MB1 and 1MB5 motors have an insulation system with a thermal class of 155 °C (F). Utilization at rated operation corresponds to thermal class 130 °C (B).

For deviations in use for frame sizes 400 and 450, see "Winding and insulation version with regard to temperature class", on page 1/33.

Voltage tolerances

The motors are suitable for operation with voltage and frequency tolerances according to EN 60034-1.

According with requirements of explosion protection, the following must also be ensured by testing that the permissible temperature limits for the inner and outer surfaces of the motor according to the relevant standard are not exceeded during continuous operation at the voltage limits (± 10 %).
For 8-pole motors of frame size 450, continuous duty is only possible with ± 5 %.

Note:

Tolerances according to EN 60034-1;
for reliable operation, a max. combined voltage and frequency tolerance +/- 10 % is recommended

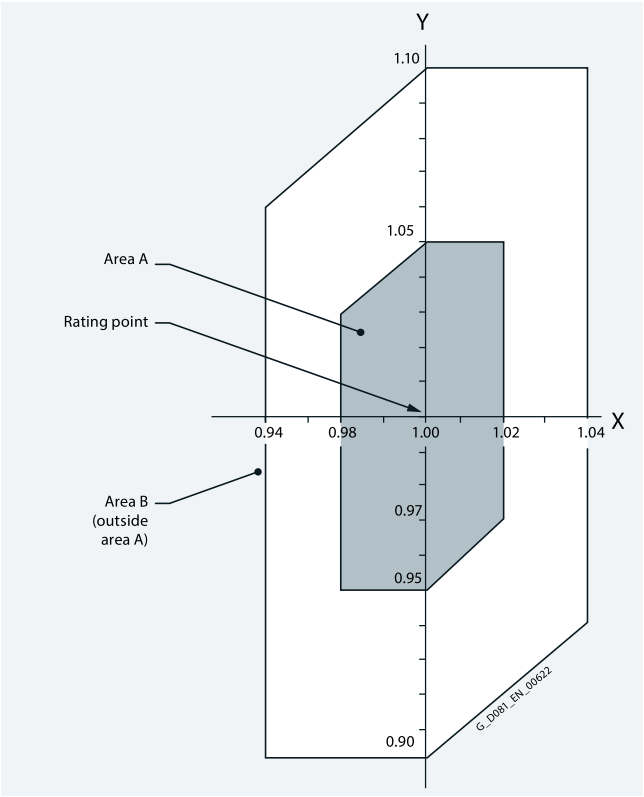

Y-axis: Voltage tolerance
Z-axis: Frequency tolerance

Motor protection

Motor protection must always be realized with a certified motor circuit breaker, see Catalog IC 10, taking into account the inrush current ratio and the maximum startup time.

Note:
For Ex eb motors in line operation, motor protection is alternatively possible as protection by PTC thermistors only, taking into account the inrush current ratio $I_{startup}/I_{rated}$ and time t_E.
When the motor shaft is locked, the motor circuit breaker must disconnect the motor from the line supply within time t_E so that the maximum ignition temperature of the specific temperature class is not exceeded. Optionally on some motors up to frame size 200, full motor protection with a PTC thermistor is possible. The information about full motor protection with a PTC thermistor is documented in the EU type-examination certificate. The tripping devices required for this purpose, see Catalog IC 10, must always be certified.

© Innomotics 2024

Technical specifications

Operation on a frequency converter

General information

Basically, explosion-protected motors (except for Ex eb) can be fed from converters. Particular attention must be paid to the interaction between the motor and converter system, especially with regard to the following aspects:

- The harmonic content of the supply voltage raises the motor temperature, so the motor power must be reduced
- Less cooling of the motor at speeds below the rated speed
- Voltage stress on the motor winding
- Bearing currents

The general use of high-quality insulation systems enables converter operation. When operated with a converter, the motor with explosion protection must be fitted with order code **B40**, **B41**, **B43** or **B44** and with PTC thermistors – order code **Q11** or **Q12**. These are installed in the stator winding and, in combination with an ex-certified trip unit (EU type-examination certificate), they perform sole motor protection in the case of converter operation.

The permissible speed and torque range is stamped on an additional rating plate.

These rated operating points stamped on the additional rating plate apply for both constant torque drives and fluid-flow machines with a square-law load torque. For constant torque drives, the resulting thermal motor torques in the positioning range must be taken into account.

During converter operation, the reduced torques for constant torque and drives for fans, pumps and compressors must be observed due to the harmonic content of the supply.
This data is available in the "SPC" at
configurator.innomotics.com

Higher noise levels must be expected than for 50 Hz line operation for motors operating with converters due to the harmonic content of the supply.

Maximum voltage stress on the motor winding in converter operation:

Frame sizes: 71 to 355:

- $\hat{U}_{\text{phase-to-phase}}$: ≤ 1500 V (3000 V peak-peak values ($V_{pk/pk}$))
- $\hat{U}_{\text{phase-to-ground}}$: ≤ 1100 V (2200 V peak-peak values ($V_{pk/pk}$))

The following generally applies to motor-converter systems:

- U_{line}: ≤ 480 V ± 10 % (BLM = Basic Line Module; DFE = Direct Front End)
- U_{line}: ≤ 460 V ± 10 % (ALM = Active Line Module; AFE = Active Front End); U_{dc} < 750 V
- U_{line}: = 500 V to 690 V ± 10 %
  Ex db, Ex ec, Ex tb, Ex tc with measures to reduce peak voltages to a maximum of 1500 V (3000 V peak-to-peak values (Vpk/pk)) permissible; e.g. by means of suitable filters, valid for SINAMICS (B40/B41) and without reference to the converter make (B43/B44)

Motors of the 1MB55 series with frame sizes 400 and 450 with the IVIC-C advanced insulation system:

- $\hat{U}_{\text{phase-to-phase}}$: ≤ 1600 V (3200 V peak-peak values ($V_{pk/pk}$))
- $\hat{U}_{\text{phase-to-ground}}$: ≤ 1400 V (2800 V peak-peak values ($V_{pk/pk}$))

Motors of the 1MB.8 series with frame sizes 71 to 450 with the IVIC-C premium insulation system:

- $\hat{U}_{\text{phase-to-phase}}$: ≤ 2200 V (4400 V peak-peak values ($V_{pk/pk}$))
- $\hat{U}_{\text{phase-to-ground}}$: ≤ 1500 V (3000 V peak-peak values ($V_{pk/pk}$))
- U_{line}: ≤ 690 V ± 10 % without filter

Motors with the advanced insulation system can be operated on the converter without an additional dv/dt or sine-wave filter if the following limits are observed:

- U_{line} ≤ 480 V
- U_{DC} ≤ 720 V

Converter operation requires a dv/dt or sine-wave filter or a motor with PREMIUM insulation system (motor types 1MB18. or 1MB58.) if at least the following limit is exceeded:

- $\hat{U}_{\text{phase-to-phase}}$: ≤ 1500 V (3000 V peak-peak values ($V_{pk/pk}$))

The voltage limits are chosen such that safe operation is ensured without knowledge of the converter or the converter infeed. If it is ensured that the motor is powered through a converter with uncontrolled infeed (e.g. SINAMICS G), the 1MB15 and 1MB55 motors can be operated up to U_{line} = 480 V because the limits U_{DC} ≤ 720 V are then observed.

In configuration of the drive system, it must be considered that the DC-link voltage UDC exceeds the limit of $U_{DC,\,max}$ = 720 V (continuous duty) during braking where converters without energy recovery capability, such as SINAMICS G, are used. Exceeding this limit is permissible for a short time, for example, if the $U_{DC,\,max}$ controller or braking chopper ensures that the DC-link voltage does not exceed the following limits:

- 1MB.5 (advanced): $U_{DC,\,max}$ = 890 V (short-time duty)
- 1MB.8 (premium): $U_{DC,\,max}$ = 1225 V (short-time duty)

Further configuration notes are documented in the declaration of compliance with the order 2.1 and in the EU type-examination certificates.

© Innomotics 2024

Technical specifications

Order processing of 1MB1, 1MB5 motors with Ex db, Ex ec, Ex tb and Ex tc for converter operation

PTC thermistor

For converter operation, Ex motors must always be monitored using PTC thermistors. The motors must therefore be ordered with the 15th position of the Article No.

_ **B** – PTC thermistor for tripping – or alternatively

_ **C** – PTC thermistor for alarm and tripping.

General information regarding the PTC thermistors:

_ **B** in 15th position of the Article No.:
The motors are equipped with 3 PTC thermistors for tripping in the motor winding.

_ **C** in 15th position of the Article No.:
The motors are equipped with 3 PTC thermistors for alarm and 3 PTC thermistors for tripping in the motor winding.

Certified tripping units are required for this purpose, see Catalog IC 10.

To ensure unambiguous order handling for the voltage, each approved voltage code/voltage order code is assigned only "one" voltage/frequency, as seen below:

Voltage code 12th and 13th position of the Article No.	Order code	Line frequency	Line voltage
22	–	50 Hz	230 VΔ/400 VY, 50-Hz power[2]
34	–	50 Hz	400 VΔ/690 VY, 50-Hz power[2]
33	–	50 Hz	380 VΔ/660 VY, 50-Hz power
27	–	50 Hz	500 VY, 50 Hz power
40	–	50 Hz	500 VΔ, 50 Hz power
90	**M4A**	50 Hz	400 VY, 50 Hz power
90	**M4B**	50 Hz	400 VΔ, 50 Hz power
90	**M4E**	50 Hz	690 VY, 50 Hz power
90	**M4F**	50 Hz	690 VΔ, 50 Hz power
90	**M2C**	60 Hz	440 VY, 50 Hz power
90	**M1C**	60 Hz	440 VY, 60 Hz power
90	**M2D**	60 Hz	440 VΔ, 50 Hz power
90	**M1D**	60 Hz	440 VΔ, 60 Hz power
90	**M2E**	60 Hz	460 VY, 50 Hz power
90	**M1E**	60 Hz	460 VY, 60 Hz power
90	**M2F**	60 Hz	460 VΔ, 50 Hz power
90	**M1F**	60 Hz	460 VΔ, 60 Hz power
90	**M2G**	60 Hz	575 VY, 50 Hz power
90	**M1G**	60 Hz	575 VY, 60 Hz power
90	**M2H**	60 Hz	575 VΔ, 50 Hz power
90	**M1H**	60 Hz	575 VΔ, 60 Hz power
90	**M2K**	60 Hz	480 VY; 50 Hz power
90	**M1K**	60 Hz	480 VY; 60 Hz power
90	**M2L**	60 Hz	480 VΔ, 50 Hz power
90	**M1L**	60 Hz	480 VΔ, 60 Hz power
90	**M1Y** (non-standard winding)	50 or 60 Hz	Plain text (observe max. voltage stress)
90	**M3A** [1]	87 Hz	At 87 Hz, 400 VΔ: (4-pole to 8-pole)

[1] The motor contains winding version 50 Hz 230 VΔ.
[2] Stamp data for converter operation are indicated for 400 V.
[3] Zone 21 includes conductive and non-conductive dust.

Minimum pulse frequency for operation without derating

Power (kW)	Minimum pulse frequency
$P_N < 90$	≥ 2 kHz (Ex db ≥ 2 kHz)
$90 \geq P_N \leq 250$	≥ 2 kHz
$250 \geq P_N \leq 460$	≥ 1.25 kHz
$P_N > 400$ (FS400/450)	≥ 2.5 kHz

Converter operation specially for motors in type of protection "Ex ec" (Zone 2) and VIK-Ex ec version

IEC/EN 60079-7 specifies that the motor and converter must be tested as a unit (individual test). The individual test is available for motors of "Ex ec" type of protection on the specified converters SINAMICS G, SINAMICS S and SINAMICS V20.
For details, see declaration of compliance with the order 2.1.

Operation with frequency converters not mentioned or converters from other manufacturers that are comparable in terms of output voltage, output current, switching frequency and modulation according to the information on the motor type plate or additional plate and in the declaration of conformity with the order 2.1 does not require individual testing.

Converters with different parameters must be tested individually to avoid exceeding the motor limit temperatures.

Converter operation specially for motors in type of protection "Ex tb" (Zone 21) and "Ex tc" (Zone 22) [3]

The drive system comprising motors protected against dust explosions operating on SINAMICS G, SINAMICS S and SINAMICS V20 converters has been tested. For details, see declaration of compliance with the order 2.1. Please inquire about operation with non-Siemens converters.

Converter operation specially for motors with type of protection "Ex ec/Ex tc" (Zone 2/22) [4]

For the 1MB..3 Ex ec motors, the order code **B30** version (IP55) for Zones 2 and 22 must also be specified in the case of non-conductive dust. Declaration of compliance with the order 2.1 analogous to that for Zones 2, 21 and 22.

[4] Motors that are certified for gas or dust protection must not be used in hybrid mixtures! Hybrid mixtures are mixtures of flammable dusts with explosive gas/air atmospheres which can together create a dangerous explosive atmosphere if they occur at the same time. It is necessary for a competent assessor to determine and release in the individual case whether the parameters determining ignition are unfavorably affected in a particular hybrid mixture. Information on operation in hybrid mixtures is provided in IEC 60079-14.

© Innomotics 2024

Technical specifications

1MB1, 1MB5 in Ex ec, Ex tb and Ex tc:
Selection of the frequency converters

The SINAMICS frequency converters are categorized into 2 product groups (order code **B40** and **B41**). Each product group is a data record with motor operating data each assigned to one frequency converter. The converter type is stamped on the rating plate. Alternative, approved SINAMICS converters can be selected, by adding the order code **Y68**.

Product group 1 (basic version):

Order code B40 - version for converter operation in basic version with operating data SINAMICS G120 with PM240-2

Product group 1 (alternative SINAMICS converter):

Order codes **B40** + **Y68**

Operating data such as the **B40** order code with alternative SINAMICS converter on the rating plate:

_ **Y68** with plain text (C-text) G120 with PM230
_ **Y68** with plain text (C-text) G120 with PM240
_ **Y68** with plain text (C-text) G120C
_ **Y68** with plain text (C-text) G120P with PM230
_ **Y68** with plain text (C-text) G120P with PM240-2
_ **Y68** with plain text (C-text) G120P with PM240P-2
_ **Y68** with plain text (C-text) G120P with PM330
_ **Y68** with plain text (C-text) G130
_ **Y68** with plain text (C-text) G150
_ **Y68** with plain text (C-text) G180
_ **Y68** with plain text (C-text) S120 (BLM/SLM)
_ **Y68** with plain text (C-text) V20

Product group 2 (basic version):

Order code **B41** - version for converter operation in basic version with operating data SINAMICS S150.

Product group 2 (alternative SINAMICS converter):

Order codes **B41** + **Y68**

Operating data such as the **B41** order code with alternative SINAMICS converter on the rating plate:

_ Order code **Y68** with plain text (C-text) S120 (ALM)

Operation on frequency converters of unknown type or brand:

When operating on non-listed SINAMICS frequency converters or frequency converters from other manufacturers (order code **B43**), the performance data is reduced compared to data according to **B40** or **B41**.

1MB1.5 and 1MB5.5 with Ex db, Ex db eb:
Selection of the frequency converter

The Innomotics 1MB..5 and 1MB..6 motors are suitable and certified for operation on the PWM frequency converter. The only distinction made is whether the maximum permitted temperature rise of the winding is 130(B) – order code **B43** or 155(F) – order code **B44**. The power with utilization of 155(F) is approx. 10 % higher than with utilization 130(B) and the order code **B43** is usually approximately equal to the line power.

Combination with SINAMICS converters as stated in the list under Ex ec has been pretested and is recommended. For other converter types and non-Siemens converters, operation according to the Ex specifications is possible if the requirements of the certificate are met.

Defining the power for converter operation

The optimum power data are marked on the motors. These data are universally valid and can be viewed in the "SPC" and used as the basis for configuration.

In specific applications, e.g. for very long motor cables, if a sine-wave filter is being used - or for converter types that cannot reach the full rated voltage at rated frequency as a result of the inherent design, then at rated voltage there is a voltage drop at the motor terminals. Under this operating condition, in order that the motor temperature rise is not inadmissibly high, at the maximum permissible current, it is possible that the motor power is reduced (derating). For example, for use of sine-wave filters and the consequential reduction of the motor voltage by 10 to 15 %, the permissible power ratings for converter operation must be similarly reduced by 10 to 15 % at rated frequency because the corner frequency for determining the power is reduced accordingly. Operation below the reduced corner frequency is possible without reducing the torque.

© Innomotics 2024

Innomotics XP 1MB1, 1MB5 explosion-protected motors

Technical specifications

Rating plate

The operating data for line operation is specified on the rating plate - on an additional rating plate, according to the selected product, 4 rated operating points are possible in the following variants:

Possible variants	Rated operating points in Hz				Additional identification code voltage code 12th and 13th position of the Article No. and order code
50 Hz field weakening range	5	25	50	f_{max}	50 Hz voltage: e.g. "**90**" and **M4A**
60 Hz field weakening range	6	30	60	f_{max}	60 Hz voltage: e.g. "**90**" and **M1E**
87 Hz characteristic	5	25	87	f_{max}	87 Hz at 400 VΔ: "**90**" and **M3A**

f_{max} see page 6/20 "Mechanical limit speeds of the Innomotics XP explosion-protected motors".

Other voltages can be selected with the voltage code **90** (12th, 13th position of the Article No.) and order code **M1Y** Special winding.

Special case: Line operation data in two voltage levels plus converter data in one voltage level: **M1Y** + **Y80** e.g.
400 VΔ/690 VY 50Hz DOL + 400 VΔ VSD

Insulated bearings

Frame sizes 225 and 250:
For converter operation it is recommended that an "insulated bearing cartridge NDE" – order code **L51** be used.

Frame sizes 280 to 355:
For ordering with order codes **B40**/**B41**/**B43**/**B44**, the "insulated bearing cartridge NDE" is included as standard.

Frame sizes 400 and 450:
For ordering with order codes **B40**/**B41**/**B43**, the "insulated bearing cartridge NDE" is included as standard.

The data on the separate rating plate for converter operation apply to both constant torque drives and pump/fan/compressor drives. For a constant torque drive, the resulting thermal motor torques in the positioning range must be taken into account.

Example motor ID:

Motor rating plate with line operation data and additional rating plate with converter operation data:

Increased safety motor Ex ec (Zone 2) for operation on SINAMICS G180:

1MB15331CB002AB4-Z
M4A+B40+Y68

Plain text Y68: SINAMICS G180

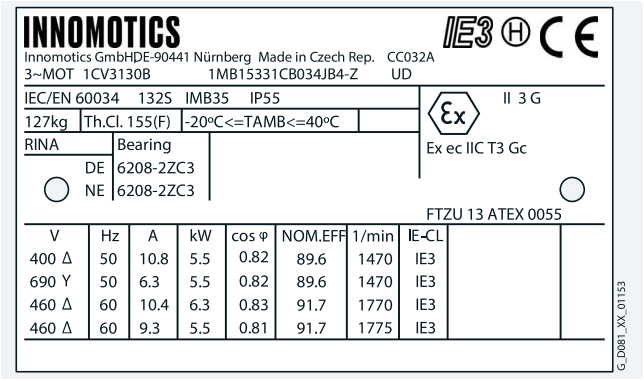

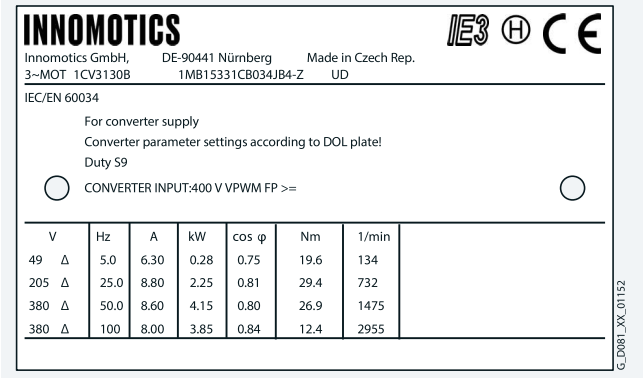

For all motors, an additional rating plate complete with the operating data for the motor on the converter is fitted.

The converter type and the associated operating data are on the rating plate.

The reasons for stamping the converter type on the additional rating plate are the different control levels for the converter output voltage, pulse frequency, output frequency, harmonic content and the associated derating for the motor.

For compliance with the permissible temperature class 130 (B), derating is necessary for converter operation below the power for direct line operation! The reduction in torque depends on the choice of converter type. The data can be viewed in the "SPC" and used as the basis for configuration.

The declaration of compliance with the order 2.1 for the specified converters is stored with the documentation for low-voltage motors in the "SPC".

© Innomotics 2024

Technical specifications

Configuration notes for converter operation

Permissible voltage stress

More stress is placed on the insulation of the motor winding with converter operation than with line operation. The voltage stress also depends on the type of converter used.

Voltage stress on a converter with pulse width modulation (PWM)

The PWM converter subjects the motor windings to wear and tear mainly by quickly applying voltage pulses. Each switching process of the converter releases a voltage wave onto the motor supply cable that can result in excessive motor voltages due to reflection (see diagram).

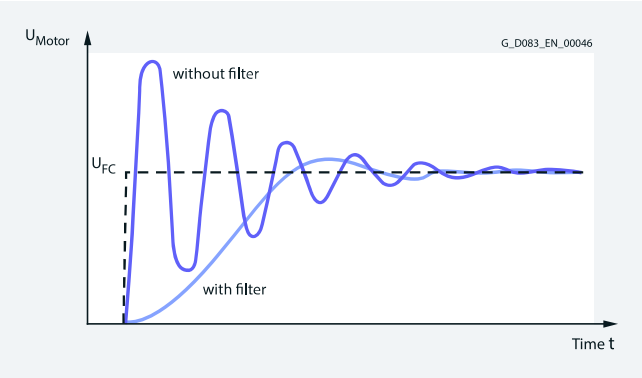

Typical progression of converter voltage U_{FC} and motor voltage U_{Motor} on the PWM converter (converter with and without output filter)

The maximum voltage is influenced by the rise time of the pulses and by the length of cable used between motor and converter. A dv/dt output filter at the converter can reduce the maximum motor voltage to uncritical values. If the permitted limits of the peak voltage for standard insulation 1500 V_{peak} (3000 $V_{peak/peak}$) or for premium insulation 2200 V_{peak} (4400 $V_{peak/peak}$) is exceeded in operation, premature motor failures can occur.

For Innomotics XP motors, the limits according to the certificate apply additionally and take precedence.

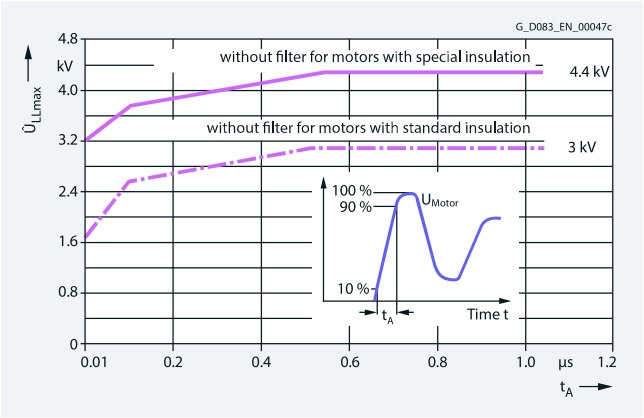

© Innomotics 2024

Innomotics XP 1MB1, 1MB5 explosion-protected motors

Technical specifications

Individual drive check of variable speed drive (VSD) systems (IC411 self-ventilated motors) with configuration characteristics for converter operation – 1MB1/1MB5 motors (all types of protection).

Limits for example control ranges are listed in the power tables on the following pages. For individual drive checks, the following configuration characteristics apply to frame sizes 71 to 355.

For driven machine power or torque less than or equal to rated data, operation up to f_{max} in accordance with the power tables is possible. This applies to configurations with any load torques and control ranges.

The maximum admissible speed in field weakening can be calculated by dividing $f_{max} \times 120$ by the motor's number of poles.

Checking the feasibility of the required operating point

To do this, (derived from reference point A)

- The desired load/power P_2 must be divided by the VSD power P_{VSD}
- The desired control speed n must be divided by the VSD asynchronous speed $n_{asyn\ VSD}$
- The desired load/torque T_D must be divided by the VSD torque T_{VSD}.

These calculated values should be checked afterwards against the following diagrams to determine whether the desired operating point is below the VSD load/torque limit T_D / T_{VSD} and the load/power limit P_2 / P_{VSD}.

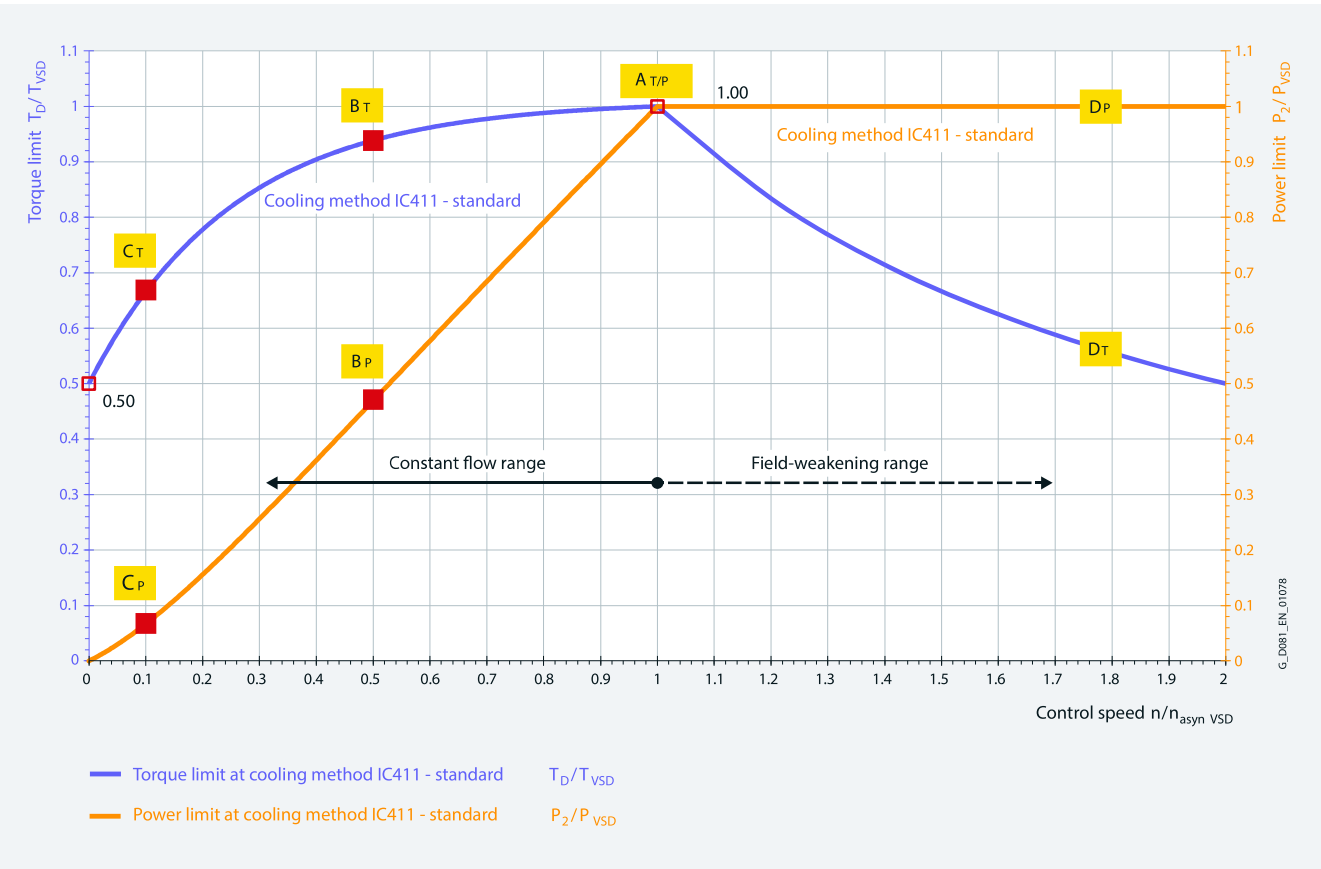

Configuration characteristics for frame sizes 71 to 200

AM/P: Reference point for general selecting/dimensioning

AP: Typical load point for applications with square-law load torque, e.g. fans and pumps

BM/CM: Typical load point for applications with constant load torque, e.g. hoisting gear, conveyor belts etc.

DM/DP: Typical load point for applications with increased speed/frequency

© Innomotics 2024

Technical specifications

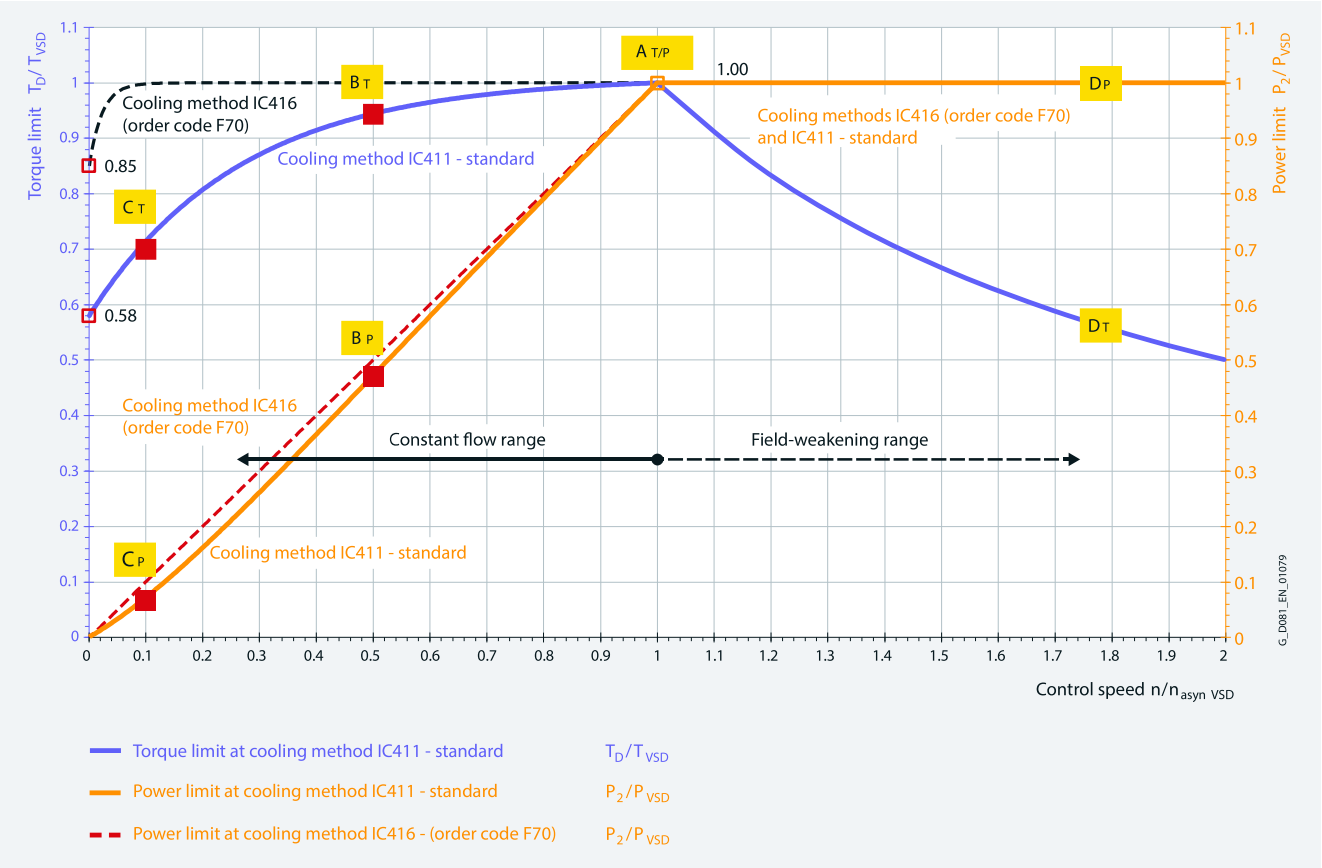

Configuration characteristics for frame sizes 225 to 355

AM/P: Reference point for general selecting/dimensioning

AP: Typical load point for applications with square-law load torque, e.g. fans and pumps

BM/CM: Typical load point for applications with constant load torque, e.g. hoisting gear, conveyor belts etc.

DM/DP: Typical load point for applications with increased speed/frequency

Fan

For version of the fan

Motor series	Frame size	Type of protection			
		Ex tb, Ex tc	Ex ec	Ex eb	Ex db eb
		1MB..1, 1MB..2	1MB..3	1MB..4	1MB..5 1MB..6
1MB1	63	Aluminum	Plastic	–	–
	71 ... 90	Aluminum	Plastic	Plastic	Plastic
	100 ... 160	Aluminum	Plastic [1]	Plastic	Plastic
	180 ... 280	Sheet steel	Plastic	Plastic	Plastic
	315	Sheet steel	Plastic	–	–
1MB5	315	Sheet steel	Sheet steel	Plastic	Plastic [2]
	355 (2-pole)	Sheet steel	Sheet steel	–	Sheet steel
	355 (4- ... 8-pole)	Sheet steel	Sheet steel	–	Sheet steel
	400 ... 450	Cast iron	Cast iron	–	–

Note:
For Ex ec, Ex eb and Ex db eb motors in combination with order code

_ **B30** – Version additionally for dust Ex tc – Zone 22

_ **B32** – Version additionally for dust Ex tb – Zone 21

Fan material as for Ex tb, Ec tc.

Low-noise version

Clockwise rotation: Order code **F77**

Counterclockwise rotation: Order code **F78**

Low-noise version			
Motor series	Frame size	2-pole motors	
		L_{pfA} db (A)	L_{WA} db (A)
1MB..5 1MB..6	160	70	82
	180	65	78
	200	67	80
	225	69	83
	250	72	86
	280	73	87
	315	73	88
	355	80	95

A version with a second shaft extension is not possible.

[1] The fan material for 1MB1032 (IE1) is aluminum.
[2] Fan material may require sheet steel in relation to the motor type.

© Innomotics 2024

Innomotics XP 1MB1, 1MB5 explosion-protected motors

Technical specifications

Mechanical limit speeds

Mechanical limit speeds of the Innomotics XP 1MB10, 1MB15, 1MB16 Ex ec, Ex tb and Ex tc explosion-protected motors

Motor frame size	Motor type	2-pole [1]		4-pole		6-pole		8-pole	
		n_{max} rpm	f_{max} Hz	n_{max} rpm	f_{max} Hz	n_{max} rpm	f_{max} Hz	n_{max} rpm	f_{max} Hz
1MB10, 1MB15, 1MB16									
63 M	1MB15	6000	100	3000	100	2000	100	1500	100
71 M	1MB15	6000	100	3000	100	2000	100	1500	100
80 M	1MB15	6000	100	3000	100	2000	100	1500	100
90 L	1MB15	6000	100	3000	100	2000	100	1500	100
100 L	1MB10, 1MB15, 1MB16	5100	85	3000	100	2000	100	1500	100
112 M	1MB10, 1MB15, 1MB16	5100	85	3000	100	2000	100	1500	100
132 S/M	1MB10, 1MB15, 1MB16	3800	63.3	3000	100	2000	100	1500	100
160 M/L	1MB10, 1MB15, 1MB16	4500	75	3000	100	2000	100	1500	100
180 M/L	1MB15, 1MB16	4500	75	3000	100	2000	100	1500	100
200 L	1MB15, 1MB16	4500	75	3000	100	2000	100	1500	100
225 S/M	1MB15, 1MB16	3600	60	3000	100	2000	100	1500	100
250 M	1MB15, 1MB16	3600	60	3000	100	2000	100	1500	100
280 S/M	1MB15, 1MB16	3600	60	3000	100	2000	100	1500	100
315 S/M/L	1MB15, 1MB16	– [2]	– [2]	2600	87	2000	100	1500	100

Mechanical limit speeds of the Innomotics XP 1MB..5 Ex db, Ex db eb explosion-protected motors [3]

Motor frame size	Motor type	2-pole [1]		4-pole		6-pole		8-pole	
		n_{max} rpm	f_{max} Hz	n_{max} rpm	f_{max} Hz	n_{max} rpm	f_{max} Hz	n_{max} rpm	f_{max} Hz
1MB1.5, 1MB5.5, 1MB1.6, 1MB5.6									
71 M	1MB1.5	6000	100	3000	100	2000	100	1500	100
80 M	1MB1.5	6000	100	3000	100	2000	100	1500	100
90 L	1MB1.5	6000	100	3000	100	2000	100	1500	100
100 L	1MB1.5	6000	100	3000	100	2000	100	1500	100
112 M	1MB1.5	6000	100	3000	100	2000	100	1500	100
132 S/M	1MB1.5	5400	90	3000	100	2000	100	1500	100
160 M/L	1MB1.5	4800	80	3000	100	2000	100	1500	100
180 M/L	1MB1.5	4560	76	3000	100	2000	100	1500	100
200 L	1MB1.5	4500	75	3000	100	2000	100	1500	100
225 S/M	1MB1.5	4500	75	2610	87	2000	100	1500	100
250 M	1MB1.5	3900	65	2400	80	2000	100	1500	100
280 S/M	1MB1.5	3600	60	2250	75	2000	100	1500	100
315 S/M/L	1MB5.5	3600	60	1950	65	2000	100	1500	100
355 M/L	1MB5.5	3600	60	1800	60	2000	100	1500	100

Innomotics XP 1MB1.6 (frame sizes 100 to 280) and 1MB5.6 (frame sizes 315 to 355) in type of protection Ex db eb IIB are optionally available with special bearing arrangement for high axial loads.

Bearings for axial tension forces - order code **L34** (frame sizes 100 ... 355):

On the drive end, there is a mounted angular-contact ball bearing for increased tension forces from the motor in the direction of the driven equipment. The bearing in frame sizes 100 to 132 is lubricated for life. For frame sizes 160 to 355, the bearings are equipped with a regreasing device.

Bearings for axial tension and thrust forces - order code **L35** (frame sizes 160 ... 225):

On the non-drive end, there are two mounted angular-contact ball bearings for increased tension and thrust forces in O arrangement. The bearings are located on the non-drive end and are designed with a regreasing device.

Frame size	Δl in mm
63 M/L	25
80 M/L	24
200 L	30
225 S/M	24

Note:
When ordering, the maximum radial and axial forces must also be specified for subsequent checks.

Grounding on the housing of 1MB..5 and 1MB..6 motors

Frame size	Thread size for the grounding conductor
71 ... 112	1 x M5
132 ... 160	2 x M6
180 ... 280	2 x M8
315 ... 355	2 x M12

Grounding on the housing of 1MB..1, 1MB..2 and 1MB..3 motors

Frame size	Thread size for the grounding conductor
63 ... 160	1 x M5
180	1 x M6
200	2 x M6
225 ... 280	1 x M8
315 ... 355	2 x M12

[1] For continuous operation in the range f_{max} (n_{max}), an inquiry is required.
[2] For frame size 315, converter operation is not permissible with 2 poles.
[3] For converter operation, the maximum tested and certified frequency may differ.

© Innomotics 2024

Technical specifications

Special technology

"Special technology" comprises technology that is compatible with explosion-protected motors.

Explosion-protected motors can be implemented in a broader range of applications when explosion-protected rotary pulse encoders or explosion-protected separately driven fans are mounted.

The use of a separately driven fan is recommended to increase motor utilization at low speeds and to limit noise generation at speeds significantly higher than the synchronous speed.

Both are normally only appropriate with converter-fed operation.

For explosion-protected motor versions with explosion-protected rotary pulse encoders or explosion-protected separately driven fans, see the tables below.

The following explosion-protected motor versions are available with explosion-protected rotary pulse encoders:

Type of protection	Motor type + order code	Frame size	Order code for explosion-protected rotary pulse encoder
Ex tb (Zone 21)	1MB101... 1MB151... 1MB161... 1MB551... 1MB581...	100 L ... 160 L 100 L ... 315 L 100 L ... 315 L 400 ... 450 400 ... 450	**G30**: Mounting of LL 841 (HTL); 1024 explosion-protected rotary pulse encoder
Ex tc (Zone 22)	1MB102... 1MB152... 1MB162... 1MB552... 1MB582...	100 L ... 160 L 100 L ... 315 L 100 L ... 315 L 400 ... 450 400 ... 450	
Ex ec (Zone 2)	1MB103... 1MB153... 1MB163... 1MB553... 1MB583...	100 L ... 160 L 100 L ... 315 L 100 L ... 315 L 400 ... 450 400 ... 450	
Ex ec or Ex tc (Zone 2/22)	1MB103... + B30 1MB153... + B30 1MB163... + B30 1MB553... + B30 1MB583... + B30	100 L ... 160 L 100 L ... 315 L 100 L ... 315 L 400 ... 450 400 ... 450	
Ex db or Ex db eb (Zone 1)	1MB..5... 1MB..6...	100 L ... 355 L	
Ex db or Ex db eb (Zone 1/21)	1MB..5... + B32 1MB..6... + B32	100 L ... 355 L	
Ex db bzw. Ex db eb (Zone 1/22)	1MB..5... + B30 1MB..6... + B30	100 L ... 355 L	

Note:
The maximum speed of the rotary pulse encoder is limited to n_{max} = 4200 rpm.

The following explosion-protected motor versions are available with explosion-protected separately driven fans:

Type of protection	Motor type + order code	Frame size	Order code for explosion-protected separately driven fan
Ex tb (Zone 21)	1MB151... 1MB161... 1MB551... 1MB581...	225 S ... 315 L 225 S ... 315 L 400 ... 450 400 ... 450	**F70**: "Mounted separately driven fan".
Ex tc (Zone 22)	1MB102... 1MB152... 1MB162... 1MB552... 1MB582...	100 L ... 160 L 100 L ... 315 L 100 L ... 315 L 400 ... 450 400 ... 450	
Ex ec (Zone 2)	1MB103... 1MB153... 1MB163... 1MB553... 1MB583...	100 L ... 160 L 100 L ... 315 L 100 L ... 315 L 400 ... 450 400 ... 450	
Ex ec or Ex tc (Zone 2/22)	1MB103... + B30 1MB153... + B30 1MB163... + B30 1MB553... + B30 1MB583... + B30	100 L ... 160 L 100 L ... 315 L 100 L ... 315 L 400 ... 450 400 ... 450	
Ex db or Ex db eb (Zone 1)	1MB..5... 1MB..6...	225 S ... 355 L	
Ex db or Ex db eb (Zone 1/21)	1MB..5... + B32 1MB..6... + B32	225 S ... 355 L	

Notes:

_ The motor operating data with the explosion-protected separately driven fan is available in the "SPC".

_ Alternatively, explosion-protected separately driven fans can also be used in line operation for special applications.

© Innomotics 2024

Technical specifications

Explosion-protected rotary pulse encoder

The rotary pulse encoder can only be mounted on a standard non-drive end (NDE), i.e. a second shaft extension cannot be supplied.

By virtue of its design, the explosion-protected rotary pulse encoder does not have insulated bearings (please inquire).

The degree of protection of the rotary pulse encoder must be observed. The relevant data are stamped on the rating plate of the rotary pulse encoder.

Attaching an explosion-protected rotary pulse encoder increases the length of the motor by Δl.
For an explanation of the additional dimensions and weights, see "Dimensions and weights of explosion-protected rotary pulse encoders".

LL 841 910 013 rotary pulse encoder (HTL version)

This encoder has a rugged construction and is therefore also suitable for difficult operating conditions. It is resistant to shock and vibration and is suitable up to corrosivity category C4.

The LL 841 910 013 explosion-protected rotary pulse encoder is supplied with the already mounted ADS diagnostic system for early detection of errors in the encoder.
Order code **G30**

Technical specifications for LL 841 910 013 (HTL version)

Supply voltage U_B	**+9 ... +30 V**
Current input without load	max. 80 mA
Admissible load current per output	40 mA
Pulses per revolution	1024
Outputs	6 short-circuit proof square-wave pulses A, A', B, B', 0, 0', high current HTL Floating switching output for ADS signal
Pulse offset between the two outputs	90° ±2 5° el.
Output amplitude	$U_{High} > U_B$ - 4 V $U_{Low} < 2.5$ V
Mark space ratio	1:1 ± 10 %
Maximum frequency	100 kHz with 350 m cable length
Maximum speed	4200 rpm (the maximum permissible speed must be observed during the configuration)
Temperature range	−40 ... +60 °C
Degree of protection	IP65
Maximum adm. radial cantilever force	150 N
Maximum adm. axial force	100 N
Connection system	Terminal strips in encoder/cable connection M20 x 1.5 radial (screw terminals)
Weight, approx.	1.7 kg

Manufacturer:
Leine und Linde AG
Olivehällsvägen 8
64542 Strängnäs, Sweden
Phone: +46 152 265 00
Fax +46 152 265 05

www.leinelinde.com
Email: info@leinelinde.de

Dimensions and weights of the explosion-protected rotary pulse encoders

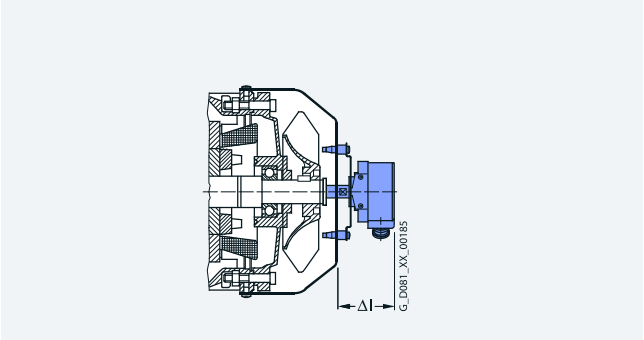

Explosion-protected rotary pulse encoder (on cover), order code **G30**

1MB10, 1MB15, 1MB16, 1MB55, 1MB56, 1MB58 motors		
Frame size	Δl	Weight approx.
	mm	kg
100	110	2
112	110	2
132	110	2
160	110	2
180	110	2
200	110	2
225	100	3
250	100	3
280	100	3
315	100	3
355	100	3
400	100	3
450	100	3

A protective cover of non-corrosive sheet steel is available for the explosion-protected rotary pulse encoders from the "special technology".
For motors in the shaft heights

- 100 to 200: a protective cover is always provided
- 225 to 450: Order code **G43** – "Mechanical protection for encoder" (protective cover analogous to order code **H00**)

The length of the motor is also increased in the case of the following shaft heights:

- 100 to 200 by up to 146 mm
- 225 to 315 by up to 25 mm

© Innomotics 2024

Technical specifications

Explosion-protected separately driven fan

The use of a separately driven fan is recommended to increase motor utilization at low speeds or to limit noise generation at speeds significantly higher than the synchronous speed. Both of these results can only be achieved with converter operation. Please inquire about traction and vibratory operation.

In the case of explosion-protected motors, the explosion-protected separately driven fan is available already mounted. Order code **F70**

Notes:

- The order code **F70** applies to all types of protection because the type of protection is already defined by the article number of the motor. Order code **F70** determines the additional charge for the separately driven fan in the assigned type of protection.
- The motor operating data with the explosion-protected separately driven fan is available in the "SPC".
- The separately driven fan motor for frame sizes 225 to 355 is made of aluminum for protection types Ex ec, Ex tc, Ex tb and made of cast iron for type Ex db.

The supply voltage for the explosion-protected motors with separately driven fan is specified as follows:

Type 2CW2 has a wide-range voltage winding (see page 6/24 "Technical specifications of separately driven fans for 1MB1 explosion-protected motors (frame sizes 100 to 200) in the Ex tc (Zone 22) and Ex ec (Zone 2) versions"). These explosion-protected motors with separately driven fan up to frame size 200 have a rated voltage (rated voltage range) with tolerances according to IEC/EN 60034-1, range A.

Technical specifications of separately driven fans for 1MB..5 and 1MB..6 explosion-protected motors (frame sizes 225 to 355) in the Ex db eb (Zone 1) versions

Frame size	Voltage V	Frequency Hz	P_{max} kW	I_{max} A
225	400	50	0.55	1.34
250				
280	460	60		1.23
315				
355	400	50	1.1	2.25
	460	60		1.98

A rating plate with the operating data is fitted to each explosion-protected motor with separately driven fan.

The type of protection of the explosion-protected motor corresponds to that of the associated explosion-protected basic motor. Please note the direction of rotation of the separately driven fan (axial-flow fan) when connecting it.

Please inquire regarding coolant temperatures outside the range −20 to +40 °C.

The Ex ec/Ex tc motor with separately driven fan has the degree of protection IP55 as standard; Ex tb: IP65 (higher degrees of protection with Ex ec are available on request).

Motors with a separately driven fan must be equipped with a PTC thermistor as motor protection (15th position of the Article No.): In the event of a fault in the separately driven fan, the PTC thermistor must reliably trip the 1MB1 or 1MB5 explosion-protected motors.

For assignments and article numbers, see the tables "Technical specifications of separately driven fans for explosion-protected motors 1MB1..." on the following pages. A rating plate listing all the important data is fitted to the separately driven fan. Please inquire in the case of supply voltages outside of the rated voltage range. Please note the direction of rotation of the separately driven fan (axial-flow fan) when connecting it. The permissible coolant temperatures are CT_{min} −20 °C and CT_{max} +40 °C. Lower coolant temperatures are available on request.

When the separately driven fan is mounted, the length of the motor increases by ΔI. For an explanation of the additional dimensions and weights, see "Dimensions and weights of explosion-protected separately driven fans".

© Innomotics 2024

Technical specifications

Technical specifications of separately driven fans for 1MB1 explosion-protected motors (frame sizes 100 to 200) in the Ex tc (Zone 22) and Ex ec (Zone 2) versions

Technical specifications of separately driven fans (according to tolerances of EN 60034-1)				
Frame size	Rated voltage range	Frequency	Power consumption	Rated current
	V	Hz	kW	A
100	3 AC 200 ... 303 Δ	50	0.097	0.40
	3 AC 346 ... 525 Y	50	0.097	0.23
	3 AC 220 ... 332 Δ	60	0.096	0.35
	3 AC 380 ... 575 Y	60	0.096	0.20
112	3 AC 200 ... 303 Δ	50	0.104	0.40
	3 AC 346 ... 525 Y	50	0.104	0.23
	3 AC 220 ... 332 Δ	50	0.114	0.34
	3 AC 380 ... 575 Y	60	0.114	0.20
132	3 AC 200 ... 303 Δ	50	0.167	0.67
	3 AC 346 ... 525 Y	50	0.167	0.39
	3 AC 220 ... 332 Δ	50	0.183	0.58
	3 AC 380 ... 575 Y	60	0.183	0.33
160 ... 200	3 AC 200 ... 303 Δ	50	0.327	1.36
	3 AC 346 ... 525 Y	50	0.327	0.79
	3 AC 220 ... 332 Δ	50	0.405	1.14
	3 AC 380 ... 575 Y	60	0.405	0.66

Technical specifications of separately driven fans for 1MB1 explosion-protected motors (frame sizes 225 to 315) in the Ex tb (Zone 21), Ex tc (Zone 22) and Ex ec (Zone 2) versions

Frame size	Rated voltage range	Frequency	Power consumption	Rated current for rated voltage
	V	Hz	kW	A
225 ... 315	3 AC 230 Δ	50	0.75	2.7
	3 AC 400 Y	50	0.75	1.56
	3 AC 460 Y	60	0.86	1.63

© Innomotics 2024

Technical specifications

Dimensions and weights of the explosion-protected separately driven fans (order code **F70**)

1MB102, 1MB152, 1MB162, 1MB103, 1MB153, 1MB163
Frame sizes 100 to 200
Explosion-protected separately driven fans
Ex tc, Ex ec

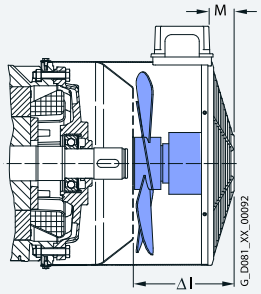

Frame size	Type of protection/motor type Ex tc (Zone 22)/1MB102, 1MB152, 1MB162 Ex ec (Zone 2)/1MB103, 1MB153, 1MB163 ΔI	Weight approx.
	mm	kg
100	141	4
112	158	4.5
132	177	5.5
160	227	7
180	269	10
200	272	11

1MB151, 1MB161, 1MB152, 1MB162, 1MB153, 1MB163
Frame sizes 225 to 315
Explosion-protected separately driven fans
Ex tb, Ex tc, Ex ec

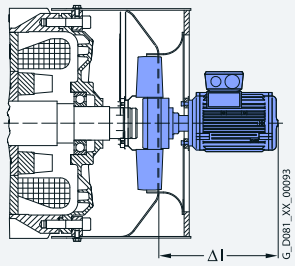

Frame size	Type of protection/motor type Ex tb (Zone 21)/1MB151, 1MB161 Ex tc (Zone 22)/1MB152, 1MB162 Ex ec (Zone 2)/1MB153, 1MB163 ΔI	Weight approx.
	mm	kg
225	259	27
250	264	30
280	260	33
315 [1]	312	44,8
315 [2]	274	41

1MB1.5., 1MB1.6., 1MB5.5., 1MB5.6.
Baugrößen 225 bis 355
Ex-Fremdlüfter
Ex db eb

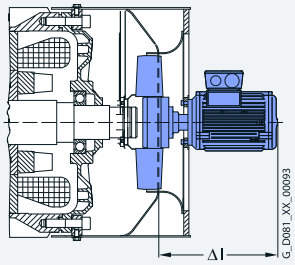

Frame size	Type of protection/motor type Ex db eb (Zone 1)/1MB155, 1MB555 ΔI	Weight approx.
	mm	kg
225	375	46
250	376	51
280	377	55
315	373	65
355	390	77

1MB1.5., 1MB1.6., 1MB5.5., 1MB5.6.
Baugrößen 225 bis 355
Ex-Fremdlüfter + Ex-Drehimpulsgeber (G30)
Ex db eb

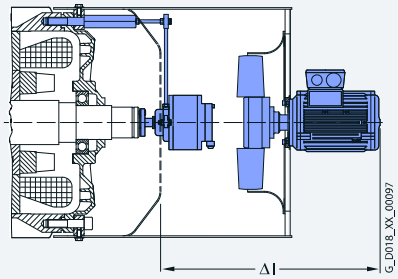

Frame size	Type of protection/motor type Ex db eb (Zone 1)/1MB1.5, 1MB1.6, 1MB5.5, 1MB5.6 ΔI	Weight approx.
	mm	kg
225	520	51
250	521	56
280	532	61
315	518	73
355	535	86

© Innomotics 2024

Innomotics XP 1MB1, 1MB5 explosion-protected motors

Technical specifications

Version 1MB..5, 1MB..6 motors (Ex db, Ex db eb) with mounted brake

The brake is located at drive-end of the motor and can be mounted with flange B5 or B14 depending on the motor – 14th position of the Article No. **F** (flange B5); **K** (flange B14).

The shaft extension is implemented in the same way as the standard shaft extension of the motor. A special shaft extension or special bearings are not possible.

The motor, including the brake, is available ATEX-certified as standard and optionally with IECEx (order code **D37**) and EACEx (order code **D35**).

The spring-operated brake (order code **F20**) is a single-disk brake with two friction surfaces. The compression springs produce the braking torque by means of friction that opposes the disk. The brake is released electromagnetically.

The degree of protection of the brake is IP66 (IEC/EN 60034-5 and IEC/EN 60079-0).

The braking voltage supply 24 V DC (order code **F10**), 230 V AC (order code **F11**) and 400 V AC (order code **F12**) have to be ordered together with order code **F20**.

In the standard version, the brake is equipped with a bimetal protection device for thermal protection with a limit value for the temperature class of the brake.

Dynamic application of the brake in accordance with the permissible energy and frequency of braking (duty cycles) can be determined by the formula "Calculation of the slipping time of the friction disk" and table "Frequency of braking".

For special operating characteristics in accordance with the permissible energy and the frequency of braking (braking cycles), calculation of new values by Innomotics is necessary.

The possibility of manual release of the brake can be ordered optionally (order code **F50**). In this case, the brake can be released in the de-energized state (no lock).

Further options for controlling the brake, such as a PTC thermistor for monitoring the brake temperature, are available on request

Overview of the brake selection for 1MB..5, 1MB..6 motors, 2 to 8-pole

		Frame size							
		80	90	100	112	132	160 [1]	180 [2]	200 [2]
Flange of the brake system with B5 flange at DE [3]		FF165	FF165	FF215	FF215	FF265	FF300	FF300	FF350
Flange of the brake system with B14 flange at DE [3]		FT100	FT115	FT130	FT130	FT165	FT215	–	–
Max. diameter of the shaft extension	mm	19 j6	24 j6	28 j6	28 j6	38 k6	42 k6	48 k6	55 m6
Brake type		VIS80	VIS90	VIS112	VIS112	VIS132	VIS160	VIS180	VIS200
Permissible radial force of the point of application x = 0.5 [4]	N	380	380	550	550	790	790	1700	1700
Rated braking torque (T_f) [5] (static torque)	Nm	12	20	50	50	100	160	260	350
Possible range of the torque (on request)	Nm	12 ... 22	12 ... 22	30 ... 60	30 ... 60	70 ... 150	100 ... 160	180 ... 350	300 ... 460
Maximum speed n_{max} - (S1 duty)	rpm	3600	3600	3600	3600	3600	2900	2500	2500
Maximum speed n_{max} - (S3-40 % load)	rpm	4320	4320	4000	4000	4000	3600	2800	2800
Power supply unit power	W	50	50	80	80	105	105	180	180
Current at 24 V DC	A	2.7	2.7	2.1	2.1	2.8	2.8	3.5	3.5
Current at 230 V AC – (207 V DC coil voltage) [6]	A	0.45	0.45	0.2	0.2	0.35	0.35	0.6	0.6
Current at 400 V AC – (180 V DC coil voltage) [7]	A	0.22	0.22	0.18	0.18	0.2	0.2	0.35	0.35
Weight, approx.	kg	32	34	50	50	78	82	135	150
Brake engagement time t_1 [8]	ms	40	40	90	90	180	180	230	230
Disengagement time t_2 [9]	ms	18	18	18	18	23	23	30	30
VIS brake moment of inertia	kgm^2	0.00088	0.00088	0.00323	0.00323	0.00831	0.00885	0.0385	0.0397
Lifetime of the brake lining (time to inspection)	kJ	50000	50000	75000	75000	90000	90000	120000	120000

Dynamic application of the brake

Due to dynamic application of the brake, the permissible energy is limited by the maximum frequency of brake application and the maximum slipping time of the friction disk for one brake application.

1) Due to the limited maximum braking velocity, 2-pole motors are not suitable for S1 duty.
2) Due to the limited maximum braking velocity, 2-pole motors are not possible.
3) The brake is mounted at the drive-end. The motor with brake can be mounted with a B5 or B14 flange, depending on the motor.
Flange B5 (14th position of the Article No. **F**) mounting of types of construction IM B5, IM V1, IM B35, IM V15;
Flange B14 (14th position of the Article No. **K**) mounting of types of construction IM B14, IM V18, IM B34).
It is not possible to mount IM V3 and IM V35.
4) The bearing lifetime of the brake is the same as the bearing lifetime of the motor.
5) The dynamic braking torque is lower because the rated braking torque depends on the speed. (The technical specifications must be stated for the dynamic braking torque.)
6) For a voltage of 230 V AC, a bridge rectifier is used, which is contained in the scope of supply.
7) For a voltage of 400 V AC, a half-wave rectifier is used, which is contained in the scope of supply.
8) Time until the braking torque is reached after the voltage supply is switched off.
9) Time until the braking torque has decayed after the voltage supply is switched on.

© Innomotics 2024

Technical specifications

Calculation of the slipping time t_3 of the friction disk [1)]

$$t_3 = \frac{J_{total} \cdot n}{9.55 \cdot (T_f \pm T_{load})}$$

J_{total} Total moment of inertia on the motor shaft $J_{brake} + J_{motor} + J_{load}$ in kgm²

n Motor speed in rpm

M_f Rated braking torque in Nm

M_{load} Instantaneous load torque in Nm positive or negative, depending on the conformity with the braking torque

t_3 Slipping time in s

Frequency and slipping time t_3 (duty cycles)

Brake type	Frequency of operations per cycle (1/h) [2)]	
	Slipping time t_3 ≤ 0.5 s	Slipping time t_3 ≥ 0.5 s to ≤ 0.8 s
VIS80	1800	900
VIS90	1800	900
VIS100	1300	650
VIS112	1300	650
VIS132	900	450
VIS160	900	450
VIS180	600	300
VIS200	600	300

VIK version
VIK = Verband der Industriellen Energie- und Kraftwirtschaft e.V. (German Association of the Energy and Power Supply Industry)

- **VIK standard version** –
  1LE1, 1LE5 + order code **C02**
  "VIK" identification on rating plate.
  ➔ Product range in Catalog Section 2.
- **VIK-Ex ec version for line operation** –
  1MB1.3, 1MB5 + order code **C02**
  "VIK" and "Ex ec IIC T3 Gc" marking on the rating plate according to Directive 2014/34/EU (ATEX).
  ➔ Product range in this Catalog Section.
- **VIK Ex ec version for converter operation** –
  1MB1.3, 1MB5 + order code **C02**+**B40**/**B41**+...
  "VIK" and "Ex ec IIC T3 Gc" markings on the rating plate and motor operating data for converter operation on the additional rating plate according to Directive 2014/34/EU (ATEX).

VIK standard version and VIK Ex ec versions include technology for Zone 2 with type of protection Ex ec IIC T3 Gc. Motors up to frame size 355 can be supplied in accordance with the technical requirements of the VIK recoDesign features for VIK version:

Ausführungsmerkmale VIK:

- Rating plate made of stainless steel
- Fan cover made of sheet steel
- Vertical motors with protective cover (order code H00 must be ordered)
- Terminal box with silicone seal
- Certified connection system in the terminal box
- Terminal box with certified sealing plugs
- External grounding
- Painting according to corrosivity category C3
- Second rating plate supplied loose

1) The slipping time t_3 is the friction time until the motor stops (≤ 0.8 s); slipping time > 0.8 s on request.

Minimum efficiency class:

For VIK standard, VIK Ex ec and VIK-Ex db version, the minimum efficiency class IE3 for line operation and converter operation must be complied with according to EU Regulation 2019/1781. For the VIK Ex eb version, the minimum efficiency class is IE2.

Ex certification EAC for the Eurasian Customs Union (Russia, Belarus, and Kazakhstan, Armenia, Kyrgyzstan)
EAC = Eurasian Conformity

For the import and commissioning of explosion-protected motors in the Eurasian Customs Union, approval is required from a named Russian testing authority.

"Ex certificate EAC for the Eurasian Customs Union"
Order code **D35**

When motors are ordered with order code **D35**, they are fitted with an additional rating plate displaying the logo "EAC Ex" and the Russian Ex marking.

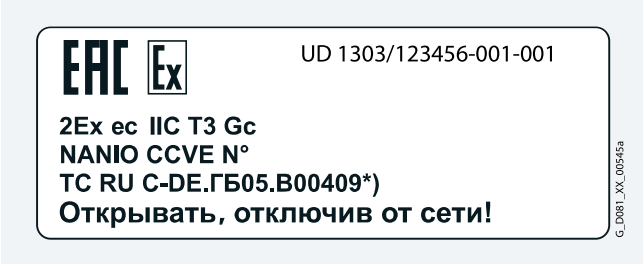

Example: Additional rating plate

The "EAC Ex" logo can also be found on the package label. The motor must have an "EAC Ex certificate", although the certificate does not generally have to be shipped with the motor. The customs authorities use the motor article number to check the motor certification.
A copy of the EAC Ex certificate must be in the customer's possession before the motor is commissioned.
The certificates are available from the Innomotics Download Center
innomotics.com/hub/en/search/entrypages/productinformation
as well as the "SPC"
configurator.innomotics.com

Coolant temperature

Coolant temperature −40 to +40 °C for explosion-protected motor

For all Innomotics XP 1MB. motors of frame sizes 71 to 450, the operating temperature can optionally be extended up to −40 °C. Extensive technical measures are necessary in this case.

Order code **D03**

For motors with type of protection Ex db IIB, the operating temperature can optionally be extended up to −55 °C.

Order code **D05**

2) Maximum frequency of braking (duty cycles) per hour (> 0.8 s on request).

© Innomotics 2024

Innomotics XP 1MB1, 1MB5 explosion-protected motors

Article number code

Selection and ordering data

The article number consists of a combination of digits and letters and is divided into three hyphenated blocks to provide a better overview, e.g.:
1MB1511-1DB22-2AB4-Z
R10

The first block (positions 1 to 7) identifies the motor type. The second block (positions 8 to 12) defines the motor frame size and length, the number of poles and power and in some cases the frequency/voltage. In the third block (positions 13 to 16), the frequency/voltage, type of construction and further design features are encoded.

For deviations in the second and third block from the catalog codes either **Z** or **90** should be used as appropriate.

Ordering data:

- Complete Article No. and order code(s) or plain text
- If a quotation has been requested, please specify the quotation number in addition to the Article No.
- When ordering a complete motor as a spare part, please specify the works serial No. for the previously supplied motor as well as the Article No.

Structure of the Article No.:			Position: 1	2	3	4	5	6	7	-	8	9	10	11	12	-	13	14	15	16	
1st to 4th position: Digit, letter, letter, digit	Explosion-protected – Self-ventilated by fan mounted on and driven by rotor		1	M	B	1															
			1	M	B	5															
5th position: Digit	Aluminum housing						0														
	Cast-iron housing Basic Line						5														
	Cast-iron housing Performance Line						6														
	Cast-iron housing – Premium insulation system						8														
6th to 7th position: 2 digits	Ex tb IIIC (Ex-Zone 21)	Motors with IE2 High Efficiency						1	1												
		Motors with IE1 Standard Efficiency						1	2												
		Motors with IE3 Premium Efficiency						1	3												
		Motors with IE4 Super Premium Efficiency						1	4												
	Ex tc IIIB (Ex-Zone 22)	Motors with IE2 High Efficiency						2	1												
		Motors with IE1 Standard Efficiency						2	2												
		Motors with IE3 Premium Efficiency						2	3												
		Motors with IE4 Super Premium Efficiency						2	4												
	Ex ec IIC T3 (Ex Zone 2)	Motors with IE2 High Efficiency						3	1												
		Motors with IE1 Standard Efficiency						3	2												
		Motors with IE3 Premium Efficiency						3	3												
		Motors with IE4 Super Premium Efficiency						3	4												
	Ex eb IIC T3 (Ex Zone 1)	Motors with IE1 Standard Efficiency						4	2												
		Motors with IE3 Premium Efficiency						4	3												
	Ex db, Ex db ed IIC T4 (Ex Zone 1)	Motors with IE3 Premium Efficiency						5	3												
		Motors with IE2 High Efficiency						5	6												
		Motors with IE3 Premium Efficiency						5	7												
	Ex db, Ex db eb IIB T4 (Ex Zone 1)	Motors with IE3 Premium Efficiency						6	3												
		Motors with IE2 High Efficiency						6	6												
		Motors with IE3 Premium Efficiency						6	7												
8th, 9th and 11th position: Digit, letter, digit	**Motor frame size** (frame size as a combination of shaft height and overall length, encoded)										0 … 4	A … B		0 … 7							
10th position: Letter	**No. of poles** A: 2-pole, B: 4-pole, C: 6-pole, D: 8-pole												A … D								
12th and 13th position: 2 digits	**Voltage, circuit and frequency** (encoded with two digits, 9-0 requires order code M.. (e.g. M1Y))														0 … 9		0 … 8				
14th position: Letter	**Type of construction** (encoded with A … V)																	A … V			
15th position: Letter	**Motor protection** (encoded with A … J)																		A … J		
16th position: Digit	**Terminal box position** 0: Terminal box, top left, 1: Terminal box, top right, 2: Terminal box, 45° left, 3: Terminal box, 45° right, 4: Terminal box, at top, 5: Terminal box, on right side, 6: Terminal box, on left side, 7: Terminal box, at bottom, 9: Special mounted components																			0 … 9	
	Special order versions: encoded – additional order code required; not encoded – additional plain text required																				- Z

© Innomotics 2024

Selection and ordering data

Ordering example

Selection criteria	Requirement	Structure of the Article No.
Motor type 1MB1	Self-ventilated motor with explosion protection of type Ex tb IIIC (Ex Zone 21), cast-iron version, with IE2 High Efficiency, IP65 degree of protection	**1MB1511-■■■■■■-■■■■■**
Motor frame size/No. of poles/Speed	160 M/4-pole/1500 rpm	**1MB1511-1DB2■-■■■■**
Rated power	11 kW	
Voltage and frequency	230 VΔ/400 VY, 50 Hz	**1MB1511-1DB22-2■■■**
Type of construction with special version	IM B3	**1MB1511-1DB22-2A■■**
Motor protection	Motor protection with PTC thermistor with 3 embedded temperature sensors for tripping	**1MB1511-1DB22-2AB■**
Terminal box position	Terminal box at top	**1MB1511-1DB22-2AB4**
Special version	Rotation of the terminal box through 90°, entry from DE	**1MB1511-1DB22-2AB4-Z R10**

© Innomotics 2024

Innomotics XP 1MB1, 1MB5 explosion-protected motors

Cast-iron series 1MB55.4 – self-ventilated or forced-air cooled

Selection and ordering data

$P_{rated, 50 Hz}$	Frame size	Operating values at rated power n_{rated}	T_{rated}	$\eta_{rated, 4/4}$	$\eta_{rated, 3/4}$	$\eta_{rated, 2/4}$	$\cos\varphi_{rated, 4/4}$	I_{rated}	T_{LR}/T_{rated}	I_{LR}/I_{rated}	T_B/T_{rated}	L_{pfA}	L_{WA}	Cast-iron series 1MB55.4 Article No.	$m_{IM B3}$	J
kW	FS	rpm	Nm	%	%	%		A				dB(A)	dB(A)		kg	kgm²
_ Cooling: self-ventilated (IC411)																
_ Efficiency: IE4 Super Premium Efficiency, service factor for sinusoidal supply																
_ Insulation: Thermal class 155 (temperature class F), IP55 degree of protection, utilization with sinusoidal supply in accordance with thermal class 130 (temperature class B)																
_ Optional and suitable for converter operation with insulated bearings (L51) for $f_p \geq 2.5$ kHz; $U_{line} \leq 480$ V; $U_{motor} \leq 500$ V; $U_{DC} \leq 720$ V - IVIC-C advanced insulation system																
2-pole: 3000 rpm at 50 Hz																
250	**315 L**	2982	800	96.5	96.6	96.4	0.91	410	2.6	7.5	3	80	95	**1MB55 ■ 4-3AA6 ■-■■■■**	1340	2.82
315	**315 L**	2980	1010	96.5	96.7	96.5	0.91	520	2.4	7.5	2.9	81	96	**1MB55 ■ 4-3AA7 ■-■■■■**	1490	3.11
355	**355 L**	2984	1140	96.5	96.4	95.9	0.9	590	2.3	8.4	3.1	83	98	**1MB55 ■ 4-3BA3 ■-■■■■**	2170	5.09
400	**355 L**	2986	1280	96.5	96.5	96	0.91	660	2.3	7.7	3.1	83	98	**1MB55 ■ 4-3BA4 ■-■■■■**	2240	5.46
500	**355 L**	2988	1600	96.5	96.4	95.8	0.89	590	2.8	8.5	3.7	83	98	**1MB55 ■ 4-3BA5 ■-■■■■**	2340	5.76
560 1) 2)	**400**	2988	1790	97	96.9	96.5	0.89	940	1.6	7.3	3.2	74	90	**1MB55 ■ 4-4AA3 ■-■■■■**	2900	8.9
630 1) 2)	**400**	2988	2000	97	97.1	96.8	0.9	1040	1.6	7.3	3	74	90	**1MB55 ■ 4-4AA5 ■-■■■■**	3000	9.8
710 3)	**400**	2988	2250	97.1	97.2	96.9	0.9	680	1.6	7.3	2.9	74	90	**1MB55 ■ 4-4AA7 ■-■■■■**	3200	10.8
800 1) 2) 3) 4)	**450**	2990	2550	97.4	97.4	97.1	0.88	780	1.4	7.8	3.9	75	91	**1MB55 ■ 4-4BA3 ■-■■■■**	4000	12.3
900 1) 2) 3) 4)	**450**	2988	2900	97.5	97.6	97.4	0.88	880	1.6	7.4	3.6	75	91	**1MB55 ■ 4-4BA5 ■-■■■■**	4300	13.5
1000 1) 2) 3) 4)	**450**	2988	3200	97.5	97.7	97.6	0.89	960	1.6	6.9	3.3	75	91	**1MB55 ■ 4-4BA7 ■-■■■■**	4500	14.7
4-pole: 1500 rpm at 50 Hz																
250	**315 L**	1488	1600	96.7	97	97	0.86	435	2.3	6.5	2.6	75	90	**1MB55 ■ 4-3AB6 ■-■■■■**	1530	5.09
315	**315 L**	1488	2000	96.7	96.9	96.8	0.85	550	2.2	7.2	2.8	75	90	**1MB55 ■ 4-3AB7 ■-■■■■**	1530	5.28
355	**355 L**	1491	2250	96.7	96.8	96.5	0.85	620	2.2	7.5	3.2	78	93	**1MB55 ■ 4-3BB3 ■-■■■■**	1960	6.26
400	**355 L**	1491	2550	96.7	96.9	96.6	0.85	700	2.3	7.3	3.2	79	95	**1MB55 ■ 4-3BB4 ■-■■■■**	2080	7.06
500	**355 L**	1491	3200	96.7	96.9	96.7	0.86	620	3.2	8.9	3.3	80	94	**1MB55 ■ 4-3BB5 ■-■■■■**	2370	8.52
560 1) 2)	**400**	1493	3600	96.9	97	96.6	0.86	970	2.2	7.5	3.1	72	88	**1MB55 ■ 4-4AB3 ■-■■■■**	3100	14.9
630 1) 2)	**400**	1492	4050	96.8	96.9	96.6	0.87	1080	2.2	6.9	2.8	74	90	**1MB55 ■ 4-4AB5 ■-■■■■**	3200	15.6
710 3)	**400**	1492	4550	97	97	96.8	0.87	700	2.2	7.2	2.9	74	90	**1MB55 ■ 4-4AB7 ■-■■■■**	3300	16.9
800 3)	**450**	1492	5100	96.9	97.1	96.9	0.87	790	1.6	6.5	2.4	79	95	**1MB55 ■ 4-4BB3 ■-■■■■**	4000	24
900 3)	**450**	1492	5800	97	97.2	97	0.88	880	1.6	6.5	2.4	79	95	**1MB55 ■ 4-4BB5 ■-■■■■**	4200	25.4
1000 1) 3)	**450**	1492	6400	97.1	97.2	97.1	0.88	980	1.7	6.8	2.5	79	95	**1MB55 ■ 4-4BB7 ■-■■■■**	4400	28

Zones				
Zone 21 (conductive and non-conductive dust occasionally) Ex tb IIIC		**1**		
Zone 22 (non-conductive dust rarely or for a short period) Ex tc IIIB		**2**		
Zone 2 (explosive gases rarely or for a short period) Ex ec IIC		**3**		
Voltages		Version		Order code
50 Hz 400 VΔ/690 VY	60 Hz 460 VΔ	**Standard**	**3 4**	–
50 Hz 500 VΔ	60 Hz 575 VΔ	Without additional charge	**4 0**	–
50 Hz 690 VΔ		Without additional charge	**4 7**	–
For other voltages and more information, see from page 6/74			■ ■	...
Types of construction		Version		Order code
Without flange	IM B3	**Standard**	**A**	–
With flange	IM B5	With additional charge	**F**	–
For other types of construction and more information, see from page 6/86			■	...
Motor protection		Version		Order code
Without		**Standard**	**A**	–
PTC thermistor with 3 temperature sensors		With additional charge	**B**	–
For other motor protection and more information, see from page 6/92			■	...
Terminal box position		Version		Order code
Terminal box base left with terminal box 45°		Without additional charge	**2**	–
Terminal box base right with terminal box 45°		**Standard**	**3**	–
For other terminal box positions and more information, see from page 6/97			■	...
Special versions				Order code(s)
Forced-air cooled (IC416)		**1MB55 ■ 4-....**	**■-■■■■**	**-Z F90+...+...+...**
For options and information, see from page 6/116		**1MB55 ■ 4-....**	**■-■■■■**	**-Z ...+...+...+...**

For footnotes, see page 6/31

© Innomotics 2024

Selection and ordering data

$P_{rated, 50 Hz}$	Frame size	Operating values at rated power n_{rated}	T_{rated}	$\eta_{rated, 4/4}$	$\eta_{rated, 3/4}$	$\eta_{rated, 2/4}$	$\cos\varphi_{rated, 4/4}$	I_{rated}	T_{LR}/T_{rated}	I_{LR}/I_{rated}	T_B/T_{rated}	L_{pfA}	L_{WA}	Cast-iron series 1MB55.4 Article No.	$m_{IM B3}$	J
kW	FS	rpm	Nm	%	%	%		A				dB(A)	dB(A)		kg	kgm²
_ Cooling: self-ventilated (IC411)																
_ Efficiency: IE4 Super Premium Efficiency, service factor for sinusoidal supply																
_ Insulation: Thermal class 155 (temperature class F), IP55 degree of protection, utilization with sinusoidal supply in accordance with thermal class 130 (temperature class B)																
_ Optional and suitable for converter operation with insulated bearings (L51) for $f_p \geq 2.5$ kHz; $U_{line} \leq 480$ V; $U_{motor} \leq 500$ V; $U_{DC} \leq 720$ V - IVIC-C advanced insulation system																
6-pole: 1000 rpm at 50 Hz																
200	**315 L**	992	1930	96.3	96.5	96.3	0.81	370	2.8	7	3	68	83	**1MB55 ■ 4-3AC7 ■-■■■■**	1410	6.39
250	**315 L**	992	2400	96.5	96.6	96.3	0.81	460	2.9	7.3	3	68	83	**1MB55 ■ 4-3AC8 ■-■■■■**	1640	8.1
315	**355 L**	992	3050	96.6	96.9	96.9	0.86	550	2.4	6.8	2.8	75	90	**1MB55 ■ 4-3BC2 ■-■■■■**	2150	12.9
355	**355 L**	993	3400	96.6	96.7	96.4	0.84	630	2.6	7.4	3.2	76	91	**1MB55 ■ 4-3BC3 ■-■■■■**	2250	13.8
400	**355 L**	994	3850	96.6	96.7	96.5	0.84	710	2.7	7.7	2.9	75	90	**1MB55 ■ 4-3BC4 ■-■■■■**	2240	13.4
450	**400**	994	4300	96.6	96.8	96.4	0.84	800	2.3	7.2	3.1	70	86	**1MB55 ■ 4-4AC3 ■-■■■■**	3100	25.5
500 [1]	**400**	994	4800	96.7	96.8	96.5	0.84	890	2.4	7.3	3.2	70	86	**1MB55 ■ 4-4AC5 ■-■■■■**	3300	27.4
560	**400**	994	5400	96.7	96.8	96.4	0.82	1020	2.6	7.5	3.5	70	86	**1MB55 ■ 4-4AC7 ■-■■■■**	3300	28.6
630 [1] [2]	**450**	995	6000	96.8	97	96.7	0.83	1130	2	7	2.8	72	88	**1MB55 ■ 4-4BC3 ■-■■■■**	4100	38.6
710 [3]	**450**	994	6800	96.7	96.8	96.5	0.84	730	1.8	6.6	2.5	72	88	**1MB55 ■ 4-4BC5 ■-■■■■**	4200	41
800 [1] [3]	**450**	994	7700	96.8	97	96.8	0.84	820	1.8	6.6	2.4	74	90	**1MB55 ■ 4-4BC7 ■-■■■■**	4300	43.3
8-pole: 750 rpm at 50 Hz																
160	**315 L**	741	2050	95.1	95.5	95.5	0.79	305	2.2	6.2	2.4	64	79	**1MB55 ■ 4-3AD7 ■-■■■■**	1420	6.78
200	**315 L**	742	2550	95.4	95.6	95.4	0.78	390	2.9	6.7	2.8	72	86	**1MB55 ■ 4-3AD8 ■-■■■■**	1660	8.5
250	**355 L**	744	3200	95.4	95.8	95.8	0.8	475	2.4	7.1	2.7	73	88	**1MB55 ■ 4-3BD1 ■-■■■■**	2280	13.3
300	**355 L**	744	4050	95.4	95.7	95.4	0.8	600	2.4	7	2.9	73	88	**1MB55 ■ 4-3BD2 ■-■■■■**	2310	13.8
355	**400**	744	4550	95.8	96.1	95.8	0.8	670	2	6.5	2.6	64	80	**1MB55 ■ 4-4AD3 ■-■■■■**	2900	21.9
400	**400**	744	5100	96	96.2	95.9	0.8	750	2	6.8	2.7	64	80	**1MB55 ■ 4-4AD5 ■-■■■■**	3100	24.5
450	**400**	744	5800	96	96.3	96	0.8	850	2.1	6.8	2.7	64	80	**1MB55 ■ 4-4AD7 ■-■■■■**	3300	27.5
500 [5]	**450**	745	6400	96.2	96.4	96.1	0.79	950	1.8	6.8	2.5	67	83	**1MB55 ■ 4-4BD3 ■-■■■■**	3800	34
560 [5]	**450**	745	7200	96.3	96.5	96.1	0.79	1060	2	6.9	2.6	67	83	**1MB55 ■ 4-4BD5 ■-■■■■**	4000	38
630 [1] [5]	**450**	745	8100	96.4	96.6	96.3	0.8	1180	2	6.9	2.5	67	83	**1MB55 ■ 4-4BD7 ■-■■■■**	4250	42.5

Zones									
Zone 21 (conductive and non-conductive dust occasionally) Ex tb IIIC							**1**		
Zone 22 (non-conductive dust rarely or for a short period) Ex tc IIIB							**2**		
Zone 2 (explosive gases rarely or for a short period) Ex ec IIC							**3**		
Voltages		Version							Order code
50 Hz 400 VΔ/690 VY	60 Hz 460 VΔ	**Standard**				**3**	**4**		–
50 Hz 500 VΔ	60 Hz 575 VΔ	Without additional charge				**4**	**0**		–
50 Hz 690 VΔ		Without additional charge				**4**	**7**		–
For other voltages and more information, see from page 6/74						■	■		...
Types of construction		Version							Order code
Without flange	IM B3	**Standard**						**A**	–
With flange	IM B5	With additional charge						**F**	–
For other types of construction and more information, see from page 6/86								■	...
Motor protection		Version							Order code
Without		**Standard**						**A**	–
PTC thermistor with 3 temperature sensors		With additional charge						**B**	–
For other motor protection and more information, see from page 6/92								■	...
Terminal box position		Version							Order code
Terminal box base left with terminal box 45°		Without additional charge							**2** –
Terminal box base right with terminal box 45°		**Standard**							**3** –
For other terminal box positions and more information, see from page 6/97									■ ...
Special versions									Order code(s)
Forced-air cooled (IC416)									**1MB55 ■ 4-.... ■-■■■■ -Z F90+...+...+...**
For options and information, see from page 6/116									**1MB55 ■ 4-.... ■-■■■■ -Z ...+...+...+...**

6

[1] Terminal box 1XB1631.
[2] Terminal box position NDE can only be ordered using order code **H09** (2 × terminal box TB3R61). Order code **H08** not available.
[3] The standard version is 50 Hz 690 VΔ (voltage code **4-7**) or 60 Hz 575 VΔ (voltage code **4-0**).
[4] In the series version, the maximum speed is n_{max} = 3000 rpm. Converter operation at higher speeds on request for an additional charge.
[5] Utilization with sinusoidal supply in accordance with thermal class 155 (temperature class F).

© Innomotics 2024

Innomotics XP 1MB1, 1MB5 explosion-protected motors

IE3

Aluminum series 1MB10 – self-ventilated

Selection and ordering data

P_{rated}, 50 Hz	P_{rated}, 60 Hz	Frame size	Operating values at rated power n_{rated}, 50 Hz	T_{rated}, 50 Hz	Different IE class 60 Hz/P60	η_{rated}, 50 Hz, 4/4	η_{rated}, 50 Hz, 3/4	η_{rated}, 50 Hz, 2/4	$\cos\varphi$ rated, 50 Hz, 4/4	I_{rated}, 50 Hz, 400 V	T_{LR}/T_{rated}	I_{LR}/I_{rated}	T_B/T_{rated}	L_{pfA}, 50 Hz	L_{WA}, 50 Hz	Aluminum series 1MB1 Article No.	$m_{IM\ B3}$	J
kW	kW	FS	rpm	Nm		%	%	%		A				dB(A)	dB(A)		kg	kgm²
_ Cooling: self-ventilated (IC411)																		
_ Efficiency according to IEC 60034-30: IE3 Premium Efficiency																		
_ Insulation: Thermal class 155 (temperature class F), IP55 degree of protection, utilization in accordance with thermal class 130 (temperature class B)																		
2-pole: 3000 rpm at 50 Hz, 3600 rpm at 60 Hz [1]																		
0.75	**0.86**	**80 M**	2850	2.5		80.7	82.2	81.9	0.86	1.56	2.6	6.2	3	60	71	**1MB10 ■ 3-0DA2 ■-■■■■**	11	0.0011
1.1	**1.27**	**80 M**	2885	3.65		82.7	83.9	83.1	0.85	2.25	3	7.1	3.3	60	71	**1MB10 ■ 3-0DA3 ■-■■■■**	12	0.0013
1.5	**1.75**	**90 S**	2910	4.9		84.2	84.6	83.2	0.86	3	2.7	8.1	4.2	65	77	**1MB10 ■ 3-0EA0 ■-■■■■**	15	0.0021
2.2	**2.55**	**90 L**	2910	7.2		85.9	86.8	86.1	0.88	4.2	2.6	8.3	4	65	77	**1MB10 ■ 3-0EA4 ■-■■■■**	19	0.0031
3	**3.45**	**100 L**	2910	9.8		87.1	87.7	87	0.87	5.7	4.4	9.4	4.5	72	80	**1MB10 ■ 3-1AA4 ■-■■■■**	25	0.0041
4	**4.55**	**112 M**	2945	13		88.1	88.8	87.9	0.89	7.4	2.6	9.1	3.6	73	81	**1MB10 ■ 3-1BA2 ■-■■■■**	32	0.0079
5.5	**6.3**	**132 S**	2945	17.8		89.2	89.5	88.6	0.88	10.1	2.5	8.9	3.8	69	77	**1MB10 ■ 3-1CA0 ■-■■■■**	48	0.0168
7.5	**8.6**	**132 S**	2950	24.5		90.1	90.9	90.7	0.92	13.1	2.1	8.3	4	68	80	**1MB10 ■ 3-1CA1 ■-■■■■**	57	0.031
11	**12.6**	**160 M**	2945	35.5		91.2	91.4	90.6	0.89	19.6	2.5	8.3	3.5	77	85	**1MB10 ■ 3-1DA2 ■-■■■■**	70	0.037
15	**17.3**	**160 M**	2955	48.5		91.9	91.9	90.8	0.86	27.5	3.5	10.2	4.4	77	85	**1MB10 ■ 3-1DA3 ■-■■■■**	78	0.043
18.5	**21.3**	**160 L**	2955	60		92.4	92.8	92.3	0.9	32	2.8	8.3	3.9	70	82	**1MB10 ■ 3-1DA4 ■-■■■■**	94	0.068
4-pole: 1500 rpm at 50 Hz, 1800 rpm at 60 Hz [1]																		
0.55	**0.63**	**80 M**	1440	3.65		80.8	81.1	79.3	0.78	1.26	2.1	5.9	3.1	53	64	**1MB10 ■ 3-0DB2 ■-■■■■**	11	0.0021
0.75	**0.86**	**80 M**	1450	4.95		82.5	82.3	79.9	0.75	1.75	2.7	7.1	3.9	53	64	**1MB10 ■ 3-0DB3 ■-■■■■**	14	0.0029
1.1	**1.27**	**90 S**	1440	7.3		84.1	84.7	83.4	0.78	2.4	2.9	6.9	3.6	56	68	**1MB10 ■ 3-0EB0 ■-■■■■**	16	0.0036
1.5	**1.75**	**90 L**	1445	9.9		85.3	86	85.2	0.8	3.15	2.9	7.3	3.5	60	68	**1MB10 ■ 3-0EB4 ■-■■■■**	19	0.0049
2.2	**2.55**	**100 L**	1455	14.4		86.7	87.2	86.3	0.82	4.45	3	8.3	3.8	67	75	**1MB10 ■ 3-1AB4 ■-■■■■**	25	0.0101
3	**3.45**	**100 L**	1450	19.8		87.7	88.1	87.1	0.8	6.2	3.1	8	3.8	67	75	**1MB10 ■ 3-1AB5 ■-■■■■**	26	0.01
4	**4.55**	**112 M**	1460	26		88.6	89.2	88.6	0.82	7.9	2.4	7.1	3.7	58	70	**1MB10 ■ 3-1BB2 ■-■■■■**	34	0.017
5.5	**6.3**	**132 S**	1470	35.5		89.6	90	89.4	0.82	10.8	2.9	8.5	3.7	64	76	**1MB10 ■ 3-1CB0 ■-■■■■**	64	0.034
7.5	**8.6**	**132 M**	1465	49		90.4	90.7	90.4	0.8	15	3	8.5	3.8	72	80	**1MB10 ■ 3-1CB2 ■-■■■■**	61	0.0334
11	**12.6**	**160 M**	1470	71		91.4	91.9	91.9	0.82	21	2.5	8	3.5	67	75	**1MB10 ■ 3-1DB2 ■-■■■■**	78	0.0583
15	**17.3**	**160 L**	1465	98		92.1	92.7	92	0.83	28.5	2.8	7.9	3.4	58	66	**1MB10 ■ 3-1DB4 ■-■■■■**	100	0.089

Zones			
Zone 21 (conductive and non-conductive dust occasionally) Ex tb IIIC		**1**	
Zone 22 (non-conductive dust rarely or for a short period) Ex tc IIIB		**2**	
Zone 2 (explosive gases rarely or for a short period) Ex ec IIC		**3**	
Voltages	Version		Order code
50 Hz 230 VΔ/400 VY 60 Hz [1] 460 VY	**Standard**	**2 2**	–
50 Hz 400 VΔ/690 VY 60 Hz [1] 460 VΔ	**Standard**	**3 4**	–
50 Hz 500 VY	Without additional charge	**2 7**	–
50 Hz 500 VΔ	Without additional charge	**4 0**	–
For other voltages [1] and more information, see from page 6/70		**9 0**	...
Types of construction	Version		Order code
Without flange IM B3 [2]	**Standard**	**A**	–
With flange IM B5 [2]	With additional charge	**F**	–
With flange IM B14 [2]	With additional charge	**K**	–
For other types of construction and more information, see from page 6/75		■	...
Motor protection	Version		
Without	**Standard**	**A**	
3 temperature sensors (frame sizes 80, 90 or 100 to 200)	With additional charge	**B**	
For other motor protection and more information, see from page 6/88		■	...
Terminal box position	Version		
Terminal box at top	**Standard**	**4**	
For other terminal box positions and more information, see from page 6/93		■	...
Special versions			Order code(s)
For options, see from page 6/98		**1MB10 ■ 3- .... ■-■■■■ -Z**	...+...+...+...

For footnotes, see page 6/49

© Innomotics 2024

Selection and ordering data

P_{rated}, 50 Hz	P_{rated}, 60 Hz	Frame size	Operating values at rated power n_{rated}, 50 Hz	T_{rated}, 50 Hz	Different IE class 60 Hz/P60	η_{rated}, 50 Hz, 4/4	η_{rated}, 50 Hz, 3/4	η_{rated}, 50 Hz, 2/4	$\cos\varphi$ rated, 50 Hz, 4/4	I_{rated}, 50 Hz, 400 V	T_{LR}/T_{rated}	I_{LR}/I_{rated}	T_B/T_{rated}	L_{pfA}, 50 Hz	L_{WA}, 50 Hz	Aluminum series 1MB1 Article No.	$m_{IM\ B3}$	J
kW	kW	FS	rpm	Nm		%	%	%		A				dB(A)	dB(A)		kg	kgm²
_ Cooling: self-ventilated (IC411)																		
_ Efficiency according to IEC 60034-30: IE3 Premium Efficiency																		
_ Insulation: Thermal class 155 (temperature class F), IP55 degree of protection, utilization in accordance with thermal class 130 (temperature class B)																		
6-pole: 1000 rpm at 50 Hz, 1200 rpm at 60 Hz [1]																		
0.37	**0.43**	**80 M**	940	3.75		73.5	73.1	69.4	0.66	1.1	2.3	4.2	2.7	42	53	**1MB10 ■ 3-0DC2 ■-■■■■**	12	0.0025
0.55	**0.63**	**80 M**	935	5.6		77.2	77	73.9	0.67	1.53	2.5	4.5	2.8	42	53	**1MB10 ■ 3-0DC3 ■-■■■■**	14	0.0031
0.75	**0.86**	**90 S**	945	7.6		78.9	80	78.8	0.7	1.96	2.2	4.6	2.6	43	55	**1MB10 ■ 3-0EC0 ■-■■■■**	16	0.004
1.1	**1.27**	**90 L**	950	11.1	IE1	81	81.4	79.3	0.66	2.95	2.8	5	3	60	68	**1MB10 ■ 3-0EC4 ■-■■■■**	19	0.0048
1.5	**1.75**	**100 L**	970	14.8	IE2	82.5	83.1	81.5	0.73	3.6	1.9	5.2	2.8	59	71	**1MB10 ■ 3-1AC4 ■-■■■■**	30	0.011
2.2	**2.55**	**112 M**	970	21.5	IE2	84.3	85	83.9	0.75	5	2.2	5.6	2.8	65	74	**1MB10 ■ 3-1BC2 ■-■■■■**	39	0.017
3	**3.45**	**132 S**	975	29.5		85.6	86.1	84.9	0.73	6.9	2.3	6.6	3.2	58	66	**1MB10 ■ 3-1CC0 ■-■■■■**	42	0.034
4	**4.55**	**132 M**	975	39		86.8	87.1	86.2	0.73	9.1	2.2	6.2	3	67	75	**1MB10 ■ 3-1CC2 ■-■■■■**	46	0.037
5.5	**6.3**	**132 M**	975	54		88	88.3	87.2	0.72	12.5	2.7	6.8	3.4	64	72	**1MB10 ■ 3-1CC3 ■-■■■■**	58	0.05
7.5	**8.6**	**160 M**	985	73		89.1	89.5	88.6	0.81	15	2.3	7.9	3.2	71	79	**1MB10 ■ 3-1DC2 ■-■■■■**	95	0.098
11	**12.6**	**160 L**	980	107		90.3	90.8	90.2	0.8	22	2.9	6.8	2.8	66	74	**1MB10 ■ 3-1DC4 ■-■■■■**	106	0.164
8-pole: 750 rpm at 50 Hz, 900 rpm at 60 Hz [1]																		
0.75	**0.86**	**100 L**	710	10.1		75	75.7	73.1	0.67	2.1	1.5	3.7	2.1	61	69	**1MB10 ■ 3-1AD4 ■-■■■■**	20	0.0096
1.1	**1.27**	**100 L**	710	14.8		77.7	76.4	75.1	0.67	3.05	1.8	4.1	2.3	62	70	**1MB10 ■ 3-1AD5 ■-■■■■**	26	0.013
1.5	**1.75**	**112 M**	720	19.9		79.7	85.6	77.3	0.63	4.15	2.6	5.1	3.1	62	70	**1MB10 ■ 3-1BD2 ■-■■■■**	34	0.028
2.2	**2.55**	**132 S**	725	29		81.9	82.5	80.9	0.71	5.3	1.9	5	2.5	65	73	**1MB10 ■ 3-1CD0 ■-■■■■**	42	0.046
3	**3.45**	**132 M**	725	39.5		83.5	83.8	82.2	0.72	7.1	2	5.2	2.5	70	78	**1MB10 ■ 3-1CD2 ■-■■■■**	58	0.061
4	**4.55**	**160 M**	730	52		84.8	86	85.5	0.74	9.1	1.6	4.7	2.1	63	71	**1MB10 ■ 3-1DD2 ■-■■■■**	67	0.076
5.5	**6.3**	**160 M**	730	72		86.2	87	86.3	0.73	12.4	2	5.5	2.4	68	76	**1MB10 ■ 3-1DD3 ■-■■■■**	78	0.1
7.5	**8.6**	**160 L**	730	98		87.3	87.9	86.9	0.73	16.9	2.3	5.8	2.7	70	78	**1MB10 ■ 3-1DD4 ■-■■■■**	86	0.13

Zones				
Zone 21 (conductive and non-conductive dust occasionally) Ex tb IIIC		**1**		
Zone 22 (non-conductive dust rarely or for a short period) Ex tc IIIB		**2**		
Zone 2 (explosive gases rarely or for a short period) Ex ec IIC		**3**		
Voltages		Version		Order code
50 Hz 230 VΔ/400 VY	60 Hz [1] 460 VY	**Standard**	**2 2**	–
50 Hz 400 VΔ/690 VY	60 Hz [1] 460 VΔ	**Standard**	**3 4**	–
50 Hz 500 VY		Without additional charge	**2 7**	–
50 Hz 500 VΔ		Without additional charge	**4 0**	–
For other voltages [1] and more information, see from page 6/70			**9 0**	**...**
Types of construction		Version		Order code
Without flange	IM B3 [2]	**Standard**	**A**	–
With flange	IM B5 [2]	With additional charge	**F**	–
With flange	IM B14 [2]	With additional charge	**K**	–
For other types of construction and more information, see from page 6/75			■	**...**
Motor protection		Version		
Without		**Standard**	**A**	
3 temperature sensors (frame sizes 80, 90 or 100 to 200)		With additional charge	**B**	
For other motor protection and more information, see from page 6/88			■	**...**
Terminal box position		Version		
Terminal box at top		**Standard**	**4**	
For other terminal box positions and more information, see from page 6/93			■	**...**
Special versions				Order code(s)
For options, see from page 6/98			**1MB10 ■ 3-.... ■-■■■■ -Z**	**...+...+...+...**

For footnotes, see page 6/49

© Innomotics 2024

Selection and ordering data

P_{rated}, 50 Hz	P_{rated}, 60 Hz	Frame size	Operating values at rated power n_{rated}, 50 Hz	T_{rated}, 50 Hz	Different IE class 60 Hz/P60	η_{rated}, 50 Hz, 4/4	η_{rated}, 50 Hz, 3/4	η_{rated}, 50 Hz, 2/4	cosφ rated, 50 Hz, 4/4	I_{rated}, 50 Hz, 400 V	T_{LR}/T_{rated}	I_{LR}/I_{rated}	T_B/T_{rated}	L_{pfA}, 50 Hz	L_{WA}, 50 Hz	Cast-iron series 1MB15.3 – *Basic Line* 1MB16.3 – *Performance Line* Article No.	$m_{IM\ B3}$	J
kW	kW	FS	rpm	Nm		%	%	%		A				dB(A)	dB(A)		kg	kgm²
_ Cooling: self-ventilated (IC411)																		
_ Efficiency according to IEC 60034-30: IE3 Premium Efficiency																		
_ Insulation: Thermal class 155 (temperature class F), IP55 degree of protection, utilization in accordance with thermal class 130 (temperature class B)																		
2-pole: 3000 rpm at 50 Hz, 3600 rpm at 60 Hz [1]																		
0.37	**0.43**	**71 M**	2850	1.24		73.8	73.3	69.7	0.76	0.95	3.5	5.8	3.5	52	63	**1MB1 5■3-0CA2 ■-■■■■**	13	0.00045
0.55	**0.63**	**71 M**	2850	1.84		77.8	77.5	74.5	0.76	1.34	3.7	6.1	3.7	57	68	**1MB1 5■3-0CA3 ■-■■■■**	14.5	0.0006
0.75	**0.88**	**80 M**	2850	2.5		80.7	82.2	81.9	0.86	1.56	2.6	6.2	3	60	71	**1MB1 5■3-0DA2 ■-■■■■**	18	0.0011
1.1	**1.27**	**80 M**	2885	3.65	IE1	82.7	83.9	83.1	0.85	2.25	3	7.1	3.3	60	71	**1MB1 5■3-0DA3 ■-■■■■**	21	0.0013
1.5	**1.75**	**90 S**	2910	4.9	IE2	84.2	84.6	83.2	0.86	3	2.7	8.1	4.2	65	77	**1MB1 5■3-0EA0 ■-■■■■**	25.5	0.0021
2.2	**2.55**	**90 L**	2910	7.2	IE2	85.9	86.8	86.1	0.88	4.2	2.6	8.3	4	65	77	**1MB1 5■3-0EA4 ■-■■■■**	32	0.0031
3	**3.45**	**100 L**	2910	9.8		87.1	87.7	87	0.87	5.7	4.4	9.4	4.5	72	80	**1MB1 ■■3-1AA4 ■-■■■■**	37	0.0041
4	**4.55**	**112 M**	2945	13		88.1	88.8	87.9	0.89	7.4	2.6	9.1	3.6	73	81	**1MB1 ■■3-1BA2 ■-■■■■**	41	0.0079
5.5	**6.3**	**132 S**	2945	17.8		89.2	89.5	88.6	0.88	10.1	2.5	8.9	3.8	69	77	**1MB1 ■■3-1CA0 ■-■■■■**	66	0.0168
7.5	**8.6**	**132 S**	2950	24.5		90.1	90.9	90.7	0.92	13.1	2.1	8.3	4	68	80	**1MB1 ■■3-1CA1 ■-■■■■**	73	0.031
11	**12.6**	**160 M**	2945	35.5		91.2	91.4	90.6	0.89	19.6	2.5	8.3	3.5	77	85	**1MB1 ■■3-1DA2 ■-■■■■**	97	0.037
15	**17.3**	**160 M**	2955	48.5		91.9	91.9	90.8	0.86	27.5	3.5	10.2	4.4	77	85	**1MB1 ■■3-1DA3 ■-■■■■**	104	0.043
18.5	**21.3**	**160 M**	2955	60		92.4	92.8	92.3	0.9	32	2.8	8.3	3.9	70	82	**1MB1 ■■3-1DA4 ■-■■■■**	127	0.068
22	**24.5**	**180 M**	2950	71		92.7	93	92.4	0.89	38.5	2.3	7.5	3.5	67	80	**1MB1 ■■3-1EA2 ■-■■■■**	160	0.08
30	**33.5**	**200 L**	2955	97		93.3	93.6	93.3	0.87	53	2.5	7	3.3	67	80	**1MB1 ■■3-2AA4 ■-■■■■**	225	0.134
37	**41.5**	**200 L**	2955	120		93.7	93.9	93.5	0.88	65	2.5	7.1	3.2	67	80	**1MB1 ■■3-2AA5 ■-■■■■**	250	0.158
45	**51**	**225 M**	2960	145		94	94.5	94.4	0.89	78	2.4	6.9	3.1	73	87	**1MB1 ■■3-2BA2 ■-■■■■**	315	0.26
55	**62**	**250 M**	2975	177		94.3	94.5	93.9	0.89	95	2.3	6.7	3.1	73	87	**1MB1 ■■3-2CA2 ■-■■■■**	385	0.46
75	**84**	**280 S**	2975	240		94.7	94.8	94.1	0.89	128	2.4	6.8	3	74	88	**1MB1 ■■3-2DA0 ■-■■■■**	510	0.77
90	**101**	**280 M**	2975	290		95	95.1	94.6	0.9	152	2.4	7.2	3.1	74	88	**1MB1 ■■3-2DA2 ■-■■■■**	590	0.94
110	**123**	**315 S**	2982	350		95.2	95.4	94.9	0.91	183	2.4	7.1	3.1	75	89	**1MB1 ■■3-3AA0 ■-■■■■**	750	1.39
132	**148**	**315 M**	2982	425		95.4	95.5	95.2	0.91	220	2.5	7.2	3.1	75	89	**1MB1 ■■3-3AA2 ■-■■■■**	880	1.6
160	**180**	**315 L**	2982	510		95.6	95.7	95.2	0.92	265	2.8	7.8	3.3	77	91	**1MB1 ■■3-3AA4 ■-■■■■**	980	1.9
200	**224**	**315 L**	2982	640		95.8	95.9	95.5	0.92	330	2.5	7.2	3	77	91	**1MB1 ■■3-3AA5 ■-■■■■**	1150	2.3

Basic Line				**5**	
Performance Line				**6**	
Zones					
Zone 21 (conductive and non-conductive dust occasionally) Ex tb IIIC				**1**	
Zone 22 (non-conductive dust rarely or for a short period) Ex tc IIIB				**2**	
Zone 2 (explosive gases rarely or for a short period) Ex ec IIC				**3**	
Voltages [3]			Version		Order code
50 Hz 230 VΔ/400 VY	60 Hz [1] 460 VY		**Standard**	**2 2**	–
50 Hz 400 VΔ/690 VY	60 Hz [1] 460 VΔ		**Standard**	**3 4**	–
50 Hz 500 VY			Without additional charge	**2 7**	–
50 Hz 500 VΔ			Without additional charge	**4 0**	–
For other voltages [1] and more information, see from page 6/71				**9 0**	**...**
Types of construction			Version		Order code
Without flange	IM B3 [2]		**Standard**	**A**	–
With flange	IM B5 [2]		With additional charge	**F**	–
With flange	IM B14 [2]		With additional charge	**K**	–
For other types of construction and more information, see from page 6/78				■	**...**
Motor protection		Line	Version		
Without		Only possible for **Basic Line**	**Standard**	**A**	
PTC thermistor with 3 temperature sensors		**Basic Line**	With additional charge	**B**	
		Performance Line	**Standard**	**B**	
For other motor protection and more information, see from page 6/89				■	**...**
Terminal box position			Version		
Terminal box at top			**Standard**	**4**	
For other terminal box positions and more information, see from page 6/94				■	
Special versions					Order code(s)
For options, see from page 6/102				**1MB1 ■■3-....■-■■■■-Z**	**...+...+...+...**

For footnotes, see page 6/49

© Innomotics 2024

Selection and ordering data

P_{rated}, 50 Hz	P_{rated}, 60 Hz	Frame size	Operating values at rated power n_{rated}, 50 Hz	T_{rated}, 50 Hz	Different IE class 60 Hz/P60	η_{rated}, 50 Hz, 4/4	η_{rated}, 50 Hz, 3/4	η_{rated}, 50 Hz, 2/4	cosφ rated, 50 Hz, 4/4	I_{rated}, 50 Hz, 400 V	T_{LR}/T_{rated}	I_{LR}/I_{rated}	T_B/T_{rated}	L_{pfA}, 50 Hz	L_{WA}, 50 Hz	Cast-iron series 1MB15.3 – *Basic Line* 1MB16.3 – *Performance Line* Article No.	$m_{IM\ B3}$	J
kW	kW	FS	rpm	Nm		%	%	%		A				dB(A)	dB(A)		kg	kgm²
_ Cooling: self-ventilated (IC411)																		
_ Efficiency according to IEC 60034-30: IE3 Premium Efficiency																		
_ Insulation: Thermal class 155 (temperature class F), IP55 degree of protection, utilization in accordance with thermal class 130 (temperature class B)																		
4-pole: 1500 rpm at 50 Hz, 1800 rpm at 60 Hz [1]																		
0.25	**0.29**	**71 M**	1395	1.71		73.5	73.7	70.4	0.72	0.68	2.5	4.2	2.6	44	55	**1MB1 5 ■ 3-0CB2 ■-■■■■**	13	0.001
0.37	**0.43**	**71 M**	1410	2.5		77.3	76.8	73.2	0.7	0.99	3.1	4.8	3.1	56	67	**1MB1 5 ■ 3-0CB3 ■-■■■■**	16	0.0014
0.55	**0.63**	**80 M**	1440	3.65		80.8	81.1	79.3	0.78	1.26	2.1	5.9	3.1	53	64	**1MB1 5 ■ 3-0DB2 ■-■■■■**	18.5	0.0021
0.75	**0.88**	**80 M**	1450	4.95		82.5	82.3	79.9	0.75	1.75	2.7	7.1	3.9	53	64	**1MB1 5 ■ 3-0DB3 ■-■■■■**	22.5	0.0029
1.1	**1.27**	**90 S**	1440	7.3		84.1	84.7	83.4	0.78	2.4	2.9	6.9	3.6	56	68	**1MB1 5 ■ 3-0EB0 ■-■■■■**	25	0.0036
1.5	**1.75**	**90 L**	1445	9.9		85.3	86	85.2	0.8	3.15	2.9	7.3	3.5	60	68	**1MB1 5 ■ 3-0EB4 ■-■■■■**	31	0.0049
2.2	**2.55**	**100 L**	1455	14.4		86.7	87.2	86.3	0.82	4.45	3	8.3	3.8	67	75	**1MB1 ■■ 3-1AB4 ■-■■■■**	40	0.0101
3	**3.45**	**100 L**	1450	19.8		87.7	88.1	87.1	0.8	6.2	3.1	8	3.8	67	75	**1MB1 ■■ 3-1AB5 ■-■■■■**	40	0.01
4	**4.55**	**112 M**	1460	26		88.6	89.2	88.6	0.82	7.9	2.4	7.1	3.7	58	70	**1MB1 ■■ 3-1BB2 ■-■■■■**	46	0.017
5.5	**6.3**	**132 S**	1470	35.5		89.6	90	89.4	0.82	10.8	2.9	8.5	3.7	64	76	**1MB1 ■■ 3-1CB0 ■-■■■■**	74	0.034
7.5	**8.6**	**132 M**	1465	49		90.4	90.7	90.4	0.8	15	3	8.5	3.8	72	80	**1MB1 ■■ 3-1CB2 ■-■■■■**	80	0.0334
11	**12.6**	**160 M**	1470	71		91.4	91.9	91.9	0.82	21	2.5	8	3.5	67	75	**1MB1 ■■ 3-1DB2 ■-■■■■**	105	0.0583
15	**17.3**	**160 L**	1465	98		92.1	92.7	92	0.83	28.5	2.8	7.9	3.4	58	66	**1MB1 ■■ 3-1DB4 ■-■■■■**	133	0.089
18.5	**21.3**	**180 M**	1470	120		92.6	93.1	93	0.82	35	2.5	7.2	3.3	66	73	**1MB1 ■■ 3-1EB2 ■-■■■■**	165	0.13
22	**25.3**	**180 L**	1470	143		93	93.6	93.6	0.83	41	2.3	6.8	3.3	68	75	**1MB1 ■■ 3-1EB4 ■-■■■■**	170	0.14
30	**34.5**	**200 L**	1470	195	IE2	93.6	94.2	94.2	0.84	55	2.6	7.3	3.1	65	72	**1MB1 ■■ 3-2AB5 ■-■■■■**	240	0.24
37	**42.5**	**225 S**	1478	240	IE2	93.9	94.5	94.4	0.86	66	2.5	6.4	2.7	65	78	**1MB1 ■■ 3-2BB0 ■-■■■■**	285	0.42
45	**52**	**225 M**	1478	290	IE2	94.2	94.9	95	0.86	80	2.6	6.6	2.6	66	79	**1MB1 ■■ 3-2BB2 ■-■■■■**	340	0.52
55	**63**	**250 M**	1482	355	IE2	94.6	95.1	95	0.87	96	2.5	6.8	2.9	66	79	**1MB1 ■■ 3-2CB2 ■-■■■■**	420	0.85
75	**86**	**280 S**	1485	480	IE2	95	95.3	95	0.86	133	2.5	6.9	3	69	83	**1MB1 ■■ 3-2DB0 ■-■■■■**	570	1.39
90	**104**	**280 M**	1485	580	IE2	95.2	95.5	95.3	0.87	157	2.6	7.2	3	70	84	**1MB1 ■■ 3-2DB2 ■-■■■■**	670	1.7
110	**127**	**315 S**	1488	710		95.4	95.8	95.5	0.87	191	2.6	6.8	2.9	70	84	**1MB1 ■■ 3-3AB0 ■-■■■■**	760	2.2
132	**152**	**315 M**	1490	850		95.6	95.9	95.9	0.87	230	2.8	7.3	3	73	87	**1MB1 ■■ 3-3AB2 ■-■■■■**	960	2.9
160	**184**	**315 L**	1490	1030		95.8	96.1	96.1	0.87	275	2.9	7.3	3.1	73	87	**1MB1 ■■ 3-3AB4 ■-■■■■**	990	3.1
200	**230**	**315 L**	1488	1280	IE2	96	96.3	96.1	0.88	340	3.2	7.4	3	73	87	**1MB1 ■■ 3-3AB5 ■-■■■■**	1190	3.7

Basic Line											
Performance Line											
Zones											
Zone 21 (conductive and non-conductive dust occasionally) Ex tb IIIC											
Zone 22 (non-conductive dust rarely or for a short period) Ex tc IIIB											
Zone 2 (explosive gases rarely or for a short period) Ex ec IIC											
Voltages [3]											
50 Hz 230 VΔ/400 VY	60 Hz [1] 460 VY										
50 Hz 400 VΔ/690 VY	60 Hz [1] 460 VΔ										
50 Hz 500 VY											
50 Hz 500 VΔ											
For other voltages [1] and more information, see from page 6/71											
Types of construction											
Without flange	IM B3 [2]										
With flange	IM B5 [2]										
With flange	IM B14 [2]										
For other types of construction and more information, see from page 6/78											
Motor protection		Line									
Without		Only possible for **Basic Line**									
PTC thermistor with 3 temperature sensors		**Basic Line**									
		Performance Line									
For other motor protection and more information, see from page 6/89											
Terminal box position											
Terminal box at top											
For other terminal box positions and more information, see from page 6/94											
Special versions											
For options, see from page 6/102											

Basic Line			**5**								
Performance Line			**6**								
Zones											
Zone 21 (conductive and non-conductive dust occasionally) Ex tb IIIC				**1**							
Zone 22 (non-conductive dust rarely or for a short period) Ex tc IIIB				**2**							
Zone 2 (explosive gases rarely or for a short period) Ex ec IIC				**3**							
Voltages [3]		Version									Order code
50 Hz 230 VΔ/400 VY	60 Hz [1] 460 VY	**Standard**				**2**	**2**				–
50 Hz 400 VΔ/690 VY	60 Hz [1] 460 VΔ	**Standard**				**3**	**4**				–
50 Hz 500 VY		Without additional charge				**2**	**7**				–
50 Hz 500 VΔ		Without additional charge				**4**	**0**				–
For other voltages [1] and more information, see from page 6/71						**9**	**0**				...
Types of construction		Version									Order code
Without flange	IM B3 [2]	**Standard**						**A**			–
With flange	IM B5 [2]	With additional charge						**F**			–
With flange	IM B14 [2]	With additional charge						**K**			–
For other types of construction and more information, see from page 6/78								■			...
Motor protection	Line	Version									
Without	Only possible for **Basic Line**	**Standard**							**A**		
PTC thermistor with 3 temperature sensors	**Basic Line**	With additional charge							**B**		
	Performance Line	**Standard**							**B**		
For other motor protection and more information, see from page 6/89									■		...
Terminal box position		Version									
Terminal box at top		**Standard**								**4**	
For other terminal box positions and more information, see from page 6/94										■	
Special versions											Order code(s)
For options, see from page 6/102			**1MB1 ■■ 3- ....**			**■-■■■■**				**-Z**	...+...+...+...

For footnotes, see page 6/49

© Innomotics 2024

Selection and ordering data

P_{rated}, 50 Hz	P_{rated}, 60 Hz	Frame size	Operating values at rated power n_{rated}, 50 Hz	T_{rated}, 50 Hz	Different IE class 60 Hz/P60	η_{rated}, 50 Hz, 4/4	η_{rated}, 50 Hz, 3/4	η_{rated}, 50 Hz, 2/4	$\cos\varphi$ rated, 50 Hz, 4/4	I_{rated}, 50 Hz, 400 V	T_{LR}/T_{rated}	I_{LR}/I_{rated}	T_B/T_{rated}	L_{pfA}, 50 Hz	L_{WA}, 50 Hz	Cast-iron series 1MB15.3 – *Basic Line* 1MB16.3 – *Performance Line* Article No.	$m_{IM\ B3}$	J
kW	kW	FS	rpm	Nm		%	%	%		A				dB(A)	dB(A)		kg	kgm²
_ Cooling: self-ventilated (IC411)																		
_ Efficiency according to IEC 60034-30: IE3 Premium Efficiency																		
_ Insulation: Thermal class 155 (temperature class F), IP55 degree of protection, utilization in accordance with thermal class 130 (temperature class B)																		
6-pole: 1000 rpm at 50 Hz, 1200 rpm at 60 Hz [1]																		
0.18	**0.21**	**71 M**	885	1.94		63.9	64.8	60.8	0.69	0.59	2.3	2.8	2.3	39	50	**1MB1 5 ■ 3-0CC2 ■-■■■■**	12.5	0.00098
0.25	**0.29**	**71 M**	885	2.7		68.6	69.5	66.2	0.69	0.76	2.6	3.2	2.6	46	57	**1MB1 5 ■ 3-0CC3 ■-■■■■**	15.5	0.0015
0.37	**0.43**	**80 M**	940	3.75		73.5	73.1	69.4	0.66	1.1	2.3	4.2	2.7	42	53	**1MB1 5 ■ 3-0DC2 ■-■■■■**	18.5	0.0025
0.55	**0.63**	**80 M**	935	5.6		77.2	77	73.9	0.67	1.53	2.5	4.5	2.8	42	53	**1MB1 5 ■ 3-0DC3 ■-■■■■**	22.5	0.0031
0.75	**0.88**	**90 S**	945	7.6		78.9	80	78.8	0.7	1.96	2.2	4.6	2.6	43	55	**1MB1 5 ■ 3-0EC0 ■-■■■■**	26.5	0.004
1.1	**1.27**	**90 L**	950	11.1	IE1	81	81.4	79.3	0.66	2.95	2.8	5	3	60	68	**1MB1 5 ■ 3-0EC4 ■-■■■■**	32	0.0048
1.5	**1.75**	**100 L**	970	14.8	IE2	82.5	83.1	81.5	0.73	3.6	1.9	5.2	2.8	59	71	**1MB1 ■■ 3-1AC4 ■-■■■■**	36	0.011
2.2	**2.55**	**112 M**	970	21.5	IE2	84.3	85	83.9	0.75	5	2.2	5.6	2.8	65	74	**1MB1 ■■ 3-1BC2 ■-■■■■**	53	0.017
3	**3.45**	**132 S**	975	29.5		85.6	86.1	84.9	0.73	6.9	2.3	6.6	3.2	58	66	**1MB1 ■■ 3-1CC0 ■-■■■■**	60	0.034
4	**4.55**	**132 M**	975	39		86.8	87.1	86.2	0.73	9.1	2.2	6.2	3	67	75	**1MB1 ■■ 3-1CC2 ■-■■■■**	64	0.037
5.5	**6.3**	**132 M**	975	54		88	88.3	87.2	0.72	12.5	2.7	6.8	3.4	64	72	**1MB1 ■■ 3-1CC3 ■-■■■■**	76	0.05
7.5	**8.6**	**160 M**	985	73		89.1	89.5	88.6	0.81	15	2.3	7.9	3.2	71	79	**1MB1 ■■ 3-1DC2 ■-■■■■**	124	0.098
11	**12.6**	**160 L**	980	107		90.3	90.8	90.2	0.8	22	2.9	6.8	2.8	66	74	**1MB1 ■■ 3-1DC4 ■-■■■■**	138	0.164
15	**18**	**180 L**	975	147	IE2	91.2	91.9	91.9	0.8	29.5	2.3	5.9	2.8	61	68	**1MB1 ■■ 3-1EC4 ■-■■■■**	180	0.19
18.5	**22**	**200 L**	978	181	IE2	91.7	92.5	92.5	0.79	37	2.5	5.6	2.6	64	71	**1MB1 ■■ 3-2AC4 ■-■■■■**	215	0.28
22	**26.5**	**200 L**	978	215	IE2	92.2	93.1	93.2	0.79	43.5	2.5	5.6	2.6	61	68	**1MB1 ■■ 3-2AC5 ■-■■■■**	230	0.32
30	**36**	**225 M**	982	290	IE2	92.9	93.6	93.5	0.83	56	2.6	6.6	3	64	77	**1MB1 ■■ 3-2BC2 ■-■■■■**	325	0.67
37	**44.5**	**250 M**	985	360	IE2	93.3	94	94	0.85	67	2.7	7	2.9	62	75	**1MB1 ■■ 3-2CC2 ■-■■■■**	405	1
45	**54**	**280 S**	988	435	IE2	93.7	94.3	94.2	0.85	82	3	6.8	2.8	60	74	**1MB1 ■■ 3-2DC0 ■-■■■■**	510	1.4
55	**66**	**280 M**	988	530	IE2	94.1	94.5	94.4	0.85	99	3.3	7.2	3	65	79	**1MB1 ■■ 3-2DC2 ■-■■■■**	560	1.64
75	**90**	**315 S**	990	720		94.6	94.9	94.4	0.84	136	2.6	7.5	3.1	63	78	**1MB1 ■■ 3-3AC0 ■-■■■■**	750	2.6
90	**108**	**315 M**	991	870	IE2	94.9	95.2	94.9	0.85	161	2.5	6.7	2.8	63	78	**1MB1 ■■ 3-3AC2 ■-■■■■**	890	3.1
110	**132**	**315 L**	991	1060	IE2	95.1	95.5	95.3	0.84	199	2.8	7.2	3	63	78	**1MB1 ■■ 3-3AC4 ■-■■■■**	990	3.9
132	**158**	**315 L**	992	1270	IE2	95.4	95.7	95.4	0.82	245	3.3	8	3.3	66	81	**1MB1 ■■ 3-3AC5 ■-■■■■**	1130	4.48
160	**192**	**315 L**	992	1540	IE2	95.6	95.8	95.5	0.82	295	3.5	8.5	3.6	66	81	**1MB1 ■■ 3-3AC6 ■-■■■■**	1260	5.41

Basic Line							**5**			
Performance Line							**6**			
Zones										
Zone 21 (conductive and non-conductive dust occasionally) Ex tb IIIC							**1**			
Zone 22 (non-conductive dust rarely or for a short period) Ex tc IIIB							**2**			
Zone 2 (explosive gases rarely or for a short period) Ex ec IIC							**3**			
Voltages [3]				Version						Order code
50 Hz 230 VΔ/400 VY	60 Hz [1] 460 VY			**Standard**				**2**	**2**	–
50 Hz 400 VΔ/690 VY	60 Hz [1] 460 VΔ			**Standard**				**3**	**4**	–
50 Hz 500 VY				Without additional charge				**2**	**7**	–
50 Hz 500 VΔ				Without additional charge				**4**	**0**	–
For other voltages [1] and more information, see from page 6/71								**9**	**0**	...
Types of construction				Version						Order code
Without flange	IM B3 [2]			**Standard**					**A**	–
With flange	IM B5 [2]			With additional charge					**F**	–
With flange	IM B14 [2]			With additional charge					**K**	–
For other types of construction and more information, see from page 6/78									■	...
Motor protection		Line		Version						
Without		Only possible for **Basic Line**		**Standard**					**A**	
PTC thermistor with 3 temperature sensors		**Basic Line**		With additional charge					**B**	
		Performance Line		**Standard**					**B**	
For other motor protection and more information, see from page 6/89									■	...
Terminal box position				Version						
Terminal box at top				**Standard**					**4**	
For other terminal box positions and more information, see from page 6/94									■	
Special versions										Order code(s)
For options, see from page 6/102					**1MB1 ■■ 3- ....**			**■-■■■■**	**-Z**	...+...+...+...

For footnotes, see page 6/49

© Innomotics 2024

Selection and ordering data

P_{rated}, 50 Hz	P_{rated}, 60 Hz	Frame size	Operating values at rated power n_{rated}, 50 Hz	T_{rated}, 50 Hz	Different IE class 60 Hz/P60	η_{rated}, 50 Hz, 4/4	η_{rated}, 50 Hz, 3/4	η_{rated}, 50 Hz, 2/4	$\cos\varphi$ rated, 50 Hz, 4/4	I_{rated}, 50 Hz, 400 V	T_{LR}/T_{rated}	I_{LR}/I_{rated}	T_B/T_{rated}	L_{pfA}, 50 Hz	L_{WA}, 50 Hz	Cast-iron series 1MB15.3 – *Basic Line* 1MB16.3 – *Performance Line* Article No.	$m_{IM\ B3}$	J
kW	kW	FS	rpm	Nm		%	%	%		A				dB(A)	dB(A)		kg	kgm²
_ Cooling: self-ventilated (IC411)																		
_ Efficiency according to IEC 60034-30: IE3 Premium Efficiency																		
_ Insulation: Thermal class 155 (temperature class F), IP55 degree of protection, utilization in accordance with thermal class 130 (temperature class B)																		
8-pole: 750 rpm at 50 Hz, 900 rpm at 60 Hz [1]																		
0.09	**0.1**	**71 M**	650	1.32		44.1	42.8	37.3	0.64	0.46	1.9	2.2	1.9	46	53	**1MB1 5 ■ 3-0CD2 ■-■■■■**	13	0.00098
0.12	**0.1**	**71 M**	660	1.74		50.7	49.9	44.8	0.63	0.54	2.1	2.5	2.1	46	53	**1MB1 5 ■ 3-0CD3 ■-■■■■**	16	0.0014
0.18	**0.2**	**80 M**	705	2.45		58.7	55.8	49.2	0.49	0.9	2.3	3	2.8	48	61	**1MB1 5 ■ 3-0DD2 ■-■■■■**	18	0.0021
0.25	**0.3**	**80 M**	695	3.45		64.1	62.7	57.8	0.57	0.93	1.8	2.9	2.1	52	59	**1MB1 5 ■ 3-0DD3 ■-■■■■**	22	0.003
0.37	**0.4**	**90 S**	685	5.2		69.3	68.3	63.7	0.68	1.13	1.7	2.9	1.8	56	53	**1MB1 5 ■ 3-0ED0 ■-■■■■**	26	0.0045
0.55	**0.6**	**90 L**	695	7.6		73	71.2	66.5	0.67	1.62	2	3.5	2.3	61	68	**1MB1 5 ■ 3-0ED4 ■-■■■■**	26	0.0045
0.75	**0.9**	**100 L**	710	10.1		75	75.7	73.1	0.67	2.1	1.5	3.7	2.1	61	69	**1MB1 ■■ 3-1AD4 ■-■■■■**	31	0.0096
1.1	**1.27**	**100 L**	710	14.8		77.7	76.4	75.1	0.67	3.05	1.8	4.1	2.3	62	70	**1MB1 ■■ 3-1AD5 ■-■■■■**	36	0.013
1.5	**1.75**	**112 M**	720	19.9		79.7	85.6	77.3	0.63	4.15	2.6	5.1	3.1	62	70	**1MB1 ■■ 3-1BD2 ■-■■■■**	46	0.028
2.2	**2.55**	**132 S**	725	29		81.9	82.5	80.9	0.71	5.3	1.9	5	2.5	65	73	**1MB1 ■■ 3-1CD0 ■-■■■■**	60	0.046
3	**3.45**	**132 M**	725	39.5		83.5	83.8	82.2	0.72	7.1	2	5.2	2.5	70	78	**1MB1 ■■ 3-1CD2 ■-■■■■**	78	0.061
4	**4.55**	**160 M**	730	52		84.8	86	85.5	0.74	9.1	1.6	4.7	2.1	63	71	**1MB1 ■■ 3-1DD2 ■-■■■■**	98	0.076
5.5	**6.3**	**160 M**	730	72		86.2	87	86.3	0.73	12.4	2	5.5	2.4	68	76	**1MB1 ■■ 3-1DD3 ■-■■■■**	109	0.1
7.5	**8.6**	**160 L**	730	98		87.3	87.9	86.9	0.73	16.9	2.3	5.8	2.7	70	78	**1MB1 ■■ 3-1DD4 ■-■■■■**	117	0.13
11	**13.2**	**180 L**	725	145		88.6	89.7	89.6	0.74	24	2.1	5.1	2.4	61	74	**1MB1 ■■ 3-1ED4 ■-■■■■**	190	0.26
15	**18**	**200 L**	730	196		89.6	90.1	89.4	0.73	33.5	3	6.8	3.7	57	70	**1MB1 ■■ 3-2AD5 ■-■■■■**	255	0.4
18.5	**22**	**225 S**	732	240		90.1	90.6	90	0.75	39.5	2.5	5.9	3	56	70	**1MB1 ■■ 3-2BD0 ■-■■■■**	270	0.5
22	**26.5**	**225 M**	732	285		90.6	91.4	91.2	0.77	45.5	2.6	5.9	2.9	56	70	**1MB1 ■■ 3-2BD2 ■-■■■■**	280	0.55
30	**36**	**250 M**	735	390		91.3	91.8	91.5	0.79	60	2.6	6.1	3	60	74	**1MB1 ■■ 3-2CD2 ■-■■■■**	370	0.86
37	**44.5**	**280 S**	736	480		91.8	92.5	92.4	0.78	75	2.3	5.4	2.4	63	77	**1MB1 ■■ 3-2DD0 ■-■■■■**	460	1.1
45	**54**	**280 M**	738	580		92.2	92.8	92.6	0.8	88	2.5	5.9	2.5	65	79	**1MB1 ■■ 3-2DD2 ■-■■■■**	550	1.6
55	**66**	**315 S**	740	710		92.5	92.9	92.6	0.81	106	2.3	6	2.7	66	81	**1MB1 ■■ 3-3AD0 ■-■■■■**	650	2
75	**90**	**315 M**	738	970		93.1	93.5	93.3	0.81	144	2.3	5.9	2.7	69	84	**1MB1 ■■ 3-3AD2 ■-■■■■**	720	2.5
90	**108**	**315 L**	740	1160		93.4	94.2	94.3	0.83	168	2.2	5.8	2.5	71	85	**1MB1 ■■ 3-3AD4 ■-■■■■**	860	3.1
110	**132**	**315 L**	740	1420		93.7	94.2	94.1	0.82	205	2.7	6.7	2.9	74	88	**1MB1 ■■ 3-3AD5 ■-■■■■**	980	3.9
132	**158**	**315 L**	740	1700		94	94.4	94.1	0.81	250	2.9	7.2	3.3	76	90	**1MB1 ■■ 3-3AD6 ■-■■■■**	1070	4.5

Basic Line														
Performance Line														
Zones														
Zone 21 (conductive and non-conductive dust occasionally) Ex tb IIIC														
Zone 22 (non-conductive dust rarely or for a short period) Ex tc IIIB														
Zone 2 (explosive gases rarely or for a short period) Ex ec IIC														
Voltages [3]														
50 Hz 230 VΔ/400 VY	60 Hz [1] 460 VY													
50 Hz 400 VΔ/690 VY	60 Hz [1] 460 VΔ													
50 Hz 500 VY														
50 Hz 500 VΔ														
For other voltages [1] and more information, see from page 6/71														
Types of construction														
Without flange	IM B3 [2]													
With flange	IM B5 [2]													
With flange	IM B14 [2]													
For other types of construction and more information, see from page 6/78														
Motor protection														
Without														
PTC thermistor with 3 temperature sensors														
For other motor protection and more information, see from page 6/89														
Terminal box position														
Terminal box at top														
For other terminal box positions and more information, see from page 6/94														
Special versions														
For options, see from page 6/102													

© Innomotics 2024

Innomotics XP 1MB1, 1MB5 explosion-protected motors

IE3

Cast-iron series 1MB15 Basic Line with increased power - self-ventilated

Selection and ordering data

P_{rated}, 50 Hz	P_{rated}, 60 Hz	Frame size	Operating values at rated power n_{rated}, 50 Hz	T_{rated}, 50 Hz	Different IE class 60 Hz/P60	η_{rated}, 50 Hz, 4/4	η_{rated}, 50 Hz, 3/4	η_{rated}, 50 Hz, 2/4	$\cos\varphi$ rated, 50 Hz, 4/4	I_{rated}, 50 Hz, 400 V	T_{LR}/T_{rated}	I_{LR}/I_{rated}	T_B/T_{rated}	L_{pfA}, 50 Hz	L_{WA}, 50 Hz	Cast-iron series 1MB15.3 – *Basic Line* Article No.	$m_{IM\ B3}$	J
kW	kW	FS	rpm	Nm		%	%	%		A				dB(A)	dB(A)		kg	kgm²
_ Cooling: self-ventilated (IC411)																		
_ Efficiency according to IEC 60034-30: IE3 Premium Efficiency																		
_ Insulation: Thermal class 155 (temperature class F), IP55 degree of protection, utilization in accordance with thermal class 130 (temperature class B)																		
2-pole: 3000 rpm at 50 Hz, 3600 rpm at 60 Hz [1]																		
11		**132 M**	2955	35.5		91.2	91.7	91.8	0.86	20	2.5	9.4	4.1	72	80	**1MB1 ■■ 3-1CA6 ■-■■■■**	75	0.026
22		**160 L**	2950	71		92.7	93.4	93.3	0.91	37.5	2.8	8.7	4	70	82	**1MB1 ■■ 3-1DA6 ■-■■■■**	149	0.073
28		**180 L**	2955	90		93.2	93.5	93.2	0.86	50	2.8	9.7	4.2	77	85	**1MB1 ■■ 3-1EA6 ■-■■■■**	175	0.094
45		**200 L**	2950	146		94	94.3	94	0.87	79	2.5	7.1	3.2	77	84	**1MB1 ■■ 3-2AA6 ■-■■■■**	245	0.17
55		**225 M**	2965	177		94.3	94.6	94.4	0.88	96	2.8	8	3.7	76	89	**1MB1 ■■ 3-2BA6 ■-■■■■**	370	0.31
75		**250 M**	2970	240		94.7	94.9	94.5	0.9	127	2.2	6.8	2.9	78	92	**1MB1 ■■ 3-2CA6 ■-■■■■**	470	0.56
110		**280 M**	2975	355		95.2	95.4	95.1	0.91	183	2.5	7.7	3.2	78	92	**1MB1 ■■ 3-2DA6 ■-■■■■**	665	1.1
4-pole: 1500 rpm at 50 Hz, 1800 rpm at 60 Hz [1]																		
11		**132 M**	1470	71		91.4	91.9	91.5	0.8	21.5	2.6	7.7	3.6	64	76	**1MB1 ■■ 3-1CB6 ■-■■■■**	98	0.0836
18,5		**160 L**	1480	119		92.6	92.7	91.9	0.76	38	2.7	8.1	3.8	62	75	**1MB1 ■■ 3-1DB6 ■-■■■■**	126	0.099
30		**180 L**	1470	195		93.6	94	93.8	0.79	59	3	8.2	3.8	66	74	**1MB1 ■■ 3-1EB6 ■-■■■■**	191	0.173
37		**200 L**	1475	240		93.9	94.3	94.1	0.81	70	3.1	8.1	3.5	65	72	**1MB1 ■■ 3-2AB6 ■-■■■■**	258	0.275
55		**225 M**	1478	355		94.6	95.3	95.5	0.86	98	2.8	6.5	2.7	70	83	**1MB1 ■■ 3-2BB6 ■-■■■■**	405	0.65
75		**250 M**	1486	480		95	95.2	94.8	0.85	134	3	7.9	3.4	70	83	**1MB1 ■■ 3-2CB6 ■-■■■■**	510	1.1
110		**280 M**	1486	710		95.4	95.5	95	0.85	196	3	8.3	3.4	73	87	**1MB1 ■■ 3-2DB6 ■-■■■■**	720	1.8
6-pole: 1000 rpm at 50 Hz, 1200 rpm at 60 Hz [1]																		
18,5		**180 L**	975	181		91.7	92.3	91.9	0.77	38	2.6	6.9	3.3	68	80	**1MB1 ■■ 3-1EC6 ■-■■■■**	185	0.247
30		**200 L**	978	295		92.9	93.6	93.7	0.79	59	2.8	6.5	2.8	61	68	**1MB1 ■■ 3-2AC6 ■-■■■■**	264	0.415
37		**225 M**	982	360		93.3	93.9	93.7	0.81	71	3	7.1	3.2	65	79	**1MB1 ■■ 3-2BC6 ■-■■■■**	395	0.84
45		**250 M**	986	435		93.7	94.3	94.2	0.84	83	2.8	7	2.9	68	81	**1MB1 ■■ 3-2CC6 ■-■■■■**	480	1.3
75		**280 M**	988	720		94.6	95	94.8	0.83	138	3.7	8.6	3.3	68	81	**1MB1 ■■ 3-2DC6 ■-■■■■**	630	1.9

Basic Line			**5**	
Zones				
Zone 22 (non-conductive dust rarely or for a short period) Ex tc IIIB			**2**	
Zone 2 (explosive gases rarely or for a short period) Ex ec IIC			**3**	
Voltages [3]		Version		Order code
50 Hz 230 VΔ/400 VY	60 Hz [1] 460 VY	**Standard**	**2 2**	–
50 Hz 400 VΔ/690 VY	60 Hz [1] 460 VΔ	**Standard**	**3 4**	–
50 Hz 500 VY		Without additional charge	**2 7**	–
50 Hz 500 VΔ		Without additional charge	**4 0**	–
For other voltages [1] and more information, see from page 6/71			**9 0**	...
Types of construction		Version		Order code
Without flange	IM B3 [2]	**Standard**	**A**	–
With flange	IM B5 [2]	With additional charge	**F**	–
With flange	IM B14 [2]	With additional charge	**K**	–
For other types of construction and more information, see from page 6/78			■	...
Motor protection	Line	Version		
Without	Only possible for **Basic Line**	**Standard**	**A**	
PTC thermistor with 3 temperature sensors	**Basic Line**	With additional charge	**B**	
For other motor protection and more information, see from page 6/89			■	...
Terminal box position		Version		
Terminal box at top		**Standard**	**4**	
For other terminal box positions and more information, see from page 6/94			■	
Special versions				Order code(s)
For options, see from page 6/102			**1MB1 ■■ 3-.... ■-■■■■ -Z**	...+...+...+...

6

© Innomotics 2024

Selection and ordering data

$P_{rated, 50 Hz}$	Frame size	Operating values at rated power n_{rated}	T_{rated}	$\eta_{rated, 4/4}$	$\eta_{rated, 3/4}$	$\eta_{rated, 2/4}$	$\cos\varphi_{rated, 4/4}$	I_{rated}	T_{LR}/T_{rated}	I_{LR}/I_{rated}	T_B/T_{rated}	L_{pfA}	L_{WA}	Cast-iron series 1MB55.3 Article No.	$m_{IM B3}$	J
kW	FS	rpm	Nm	%	%	%		A				dB(A)	dB(A)		kg	kgm²
_ Cooling: self-ventilated (IC411)																
_ Efficiency: IE3 Premium Efficiency																
_ Insulation: Thermal class 155 (temperature class F), IP55 degree of protection, utilization with sinusoidal supply in accordance with thermal class 130 (temperature class B)																
_ Optional and suitable for converter operation with insulated bearings (L51) for $f_p \geq 2.5$ kHz; $U_{line} \leq 480$ V; $U_{motor} \leq 500$ V; $U_{DC} \leq 720$ V - IVIC-C advanced insulation system																
2-pole: 3000 rpm at 50 Hz																
250	**315 L**	2982	800	95.8	95.9	95.6	0.91	415	2.8	7.2	3	80	94	**1MB55 ■ 3-3AA6 ■-■■■■**	1360	2.82
315	**315 L**	2980	1010	95.8	96	95.8	0.91	520	2.4	7.5	2.9	81	96	**1MB55 ■ 3-3AA7 ■-■■■■**	1490	3.11
355	**355 L**	2984	1140	95.8	95.7	95.2	0.9	590	2.3	8.4	3.1	83	98	**1MB55 ■ 3-3BA3 ■-■■■■**	2170	5.09
400	**355 L**	2986	1280	95.8	95.8	95.3	0.91	660	2.3	7.7	3.1	83	98	**1MB55 ■ 3-3BA4 ■-■■■■**	2240	5.46
500	**355 L**	2988	1600	95.8	95.7	95.1	0.89	850	2.8	8.5	3.7	83	98	**1MB55 ■ 3-3BA5 ■-■■■■**	2340	5.76
560 1) 2)	**400**	2986	1790	96.6	96.7	96.3	0.9	930	1.7	7	3.2	74	90	**1MB55 ■ 3-4AA3 ■-■■■■**	2900	8.9
630 1) 2)	**400**	2986	2000	96.6	96.7	96.6	0.91	1030	1.6	7	3	74	90	**1MB55 ■ 3-4AA5 ■-■■■■**	3000	9.8
710 3)	**400**	2988	2250	96.9	97	96.7	0.9	670	2	7.4	3.1	74	90	**1MB55 ■ 3-4AA7 ■-■■■■**	3200	10.8
800 1) 2) 3) 4)	**450**	2990	2550	97	96.9	96.6	0.88	780	1.8	7.8	3.8	75	91	**1MB55 ■ 3-4BA3 ■-■■■■**	4000	12.3
900 1) 2) 3) 4)	**450**	2986	2900	97	97.1	96.9	0.89	870	1.7	7.4	3.6	75	91	**1MB55 ■ 3-4BA5 ■-■■■■**	4300	13.5
1000 1) 2) 3) 4)	**450**	2984	3200	97	97.2	97.1	0.9	960	1.6	6.4	3.1	75	91	**1MB55 ■ 3-4BA7 ■-■■■■**	4500	14.7
4-pole: 1500 rpm at 50 Hz																
250	**315 L**	1490	1600	96	96.2	95.9	0.87	430	2.1	7.2	2.8	75	91	**1MB55 ■ 3-3AB6 ■-■■■■**	1400	4.55
315	**315 L**	1488	2000	96	96.2	96.1	0.85	560	2.2	7.2	2.8	75	90	**1MB55 ■ 3-3AB7 ■-■■■■**	1530	5.28
355	**355 L**	1491	2250	96	96.1	95.8	0.88	610	2.2	7.5	3.1	81	95	**1MB55 ■ 3-3BB3 ■-■■■■**	2070	6.36
400	**355 L**	1491	2550	96	96.1	95.9	0.87	690	2.1	7.3	3	80	95	**1MB55 ■ 3-3BB4 ■-■■■■**	2100	7.06
500	**355 L**	1491	3200	96	96.2	96	0.86	870	3.2	8.9	3.3	80	94	**1MB55 ■ 3-3BB5 ■-■■■■**	2370	8.52
560	**400**	1492	3600	96.2	96.3	95.8	0.87	970	1.8	6.5	2.7	78	94	**1MB55 ■ 3-4AB3 ■-■■■■**	2800	12.8
630 1) 2)	**400**	1492	4050	96.4	96.5	95.9	0.87	1080	1.9	6.8	2.7	78	94	**1MB55 ■ 3-4AB5 ■-■■■■**	3000	14.4
710 3)	**400**	1492	4550	96.6	96.7	96.3	0.88	700	1.8	6.9	2.7	78	94	**1MB55 ■ 3-4AB7 ■-■■■■**	3200	16.5
800 3)	**450**	1492	5100	96.5	96.6	96.2	0.87	800	1.6	6.4	2.5	81	97	**1MB55 ■ 3-4BB3 ■-■■■■**	3900	22.2
900 3)	**450**	1492	5800	96.6	96.7	96.2	0.87	910	1.6	6.9	2.7	81	97	**1MB55 ■ 3-4BB5 ■-■■■■**	4100	24.8
1000 1) 3)	**450**	1491	6400	96.6	96.7	96.4	0.88	980	1.9	6.5	2.5	81	97	**1MB55 ■ 3-4BB7 ■-■■■■**	4300	27.4

Zones				
Zone 21 (conductive and non-conductive dust occasionally) Ex tb IIIC		**1**		
Zone 22 (non-conductive dust rarely or for a short period) Ex tc IIIB		**2**		
Zone 2 (explosive gases rarely or for a short period) Ex ec IIC		**3**		
Voltages		Version		Order code
50 Hz 400 VΔ/690 VY	60 Hz 460 VΔ	**Standard**	**3 4**	–
50 Hz 500 VΔ	60 Hz 575 VΔ	Without additional charge	**4 0**	–
50 Hz 690 VΔ		Without additional charge	**4 7**	–
For other voltages and more information, see from page 6/74			■ ■	...
Types of construction		Version		Order code
Without flange	IM B3	**Standard**	**A**	–
With flange	IM B5	With additional charge	**F**	–
For other types of construction and more information, see from page 6/86			■	...
Motor protection		Version		Order code
Without		**Standard**	**A**	–
PTC thermistor with 3 temperature sensors		With additional charge	**B**	–
For other motor protection and more information, see from page 6/92			■	...
Terminal box position		Version		Order code
Terminal box base left with terminal box 45°		Without additional charge	**2**	–
Terminal box base right with terminal box 45°		**Standard**	**3**	–
For other terminal box positions and more information, see from page 6/97			■	...
Special versions				Order code(s)
Forced-air cooled (IC416)		**1MB55 ■ 3-....**	**■-■■■■ -Z**	**F90+...+...+...**
For options and information, see from page 6/116		**1MB55 ■ 3-....**	**■-■■■■ -Z**	**...+...+...+...**

For footnotes, see page 6/40

© Innomotics 2024

Innomotics XP 1MB1, 1MB5 explosion-protected motors

IE3

Cast-iron series 1MB55.3 – self-ventilated or forced-air cooled – Advanced insulation system

Selection and ordering data

$P_{rated, 50 Hz}$	Frame size	Operating values at rated power n_{rated}	T_{rated}	$\eta_{rated, 4/4}$	$\eta_{rated, 3/4}$	$\eta_{rated, 2/4}$	$\cos\varphi_{rated, 4/4}$	I_{rated}	T_{LR}/T_{rated}	I_{LR}/I_{rated}	T_B/T_{rated}	L_{pfA}	L_{WA}	Cast-iron series 1MB55.3 Article No.	$m_{IM B3}$	J
kW	FS	rpm	Nm	%	%	%		A				dB(A)	dB(A)		kg	kgm²
_ Cooling: self-ventilated (IC411)																
_ Efficiency: IE3 Premium Efficiency																
_ Insulation: Thermal class 155 (temperature class F), IP55 degree of protection, utilization with sinusoidal supply in accordance with thermal class 130 (temperature class B)																
_ Optional and suitable for converter operation with insulated bearings (L51) for $f_p \geq 2.5$ kHz; $U_{line} \leq 480$ V; $U_{motor} \leq 500$ V; $U_{DC} \leq 720$ V - IVIC-C advanced insulation system																
6-pole: 1000 rpm at 50 Hz																
200	**315 L**	992	1930	95.8	96	95.8	0.81	370	2.8	7	3	68	83	**1MB55 ■ 3-3AC7 ■-■■■■**	1410	6.39
250	**315 L**	992	2400	95.8	95.9	95.6	0.81	465	2.9	7.2	3	68	83	**1MB55 ■ 3-3AC8 ■-■■■■**	1640	8.1
315	**355 L**	992	3050	95.8	96.1	96.1	0.86	550	2.4	6.8	2.8	75	90	**1MB55 ■ 3-3BC2 ■-■■■■**	2150	12.9
355	**355 L**	993	3400	95.8	95.9	95.6	0.84	640	2.6	7.4	3.2	76	91	**1MB55 ■ 3-3BC3 ■-■■■■**	2250	13.8
400	**355 L**	994	3850	95.8	96	95.8	0.84	720	2.7	7.7	2.9	75	90	**1MB55 ■ 3-3BC4 ■-■■■■**	2240	13.4
450	**400**	992	4350	96	96.1	95.8	0.84	810	1.9	6.5	2.8	72	88	**1MB55 ■ 3-4AC3 ■-■■■■**	2900	22
500	**400**	992	4800	96	96.1	95.8	0.85	880	2	6.5	2.7	72	88	**1MB55 ■ 3-4AC5 ■-■■■■**	3100	24.7
560 [1]	**400**	992	5400	96.2	96.3	96	0.86	980	2.1	6.5	2.8	72	88	**1MB55 ■ 3-4AC7 ■-■■■■**	3300	27.8
630 [1]	**450**	993	6100	96.3	96.4	96.2	0.84	1120	2	6.5	2.6	74	90	**1MB55 ■ 3-4BC3 ■-■■■■**	3800	34.4
710 [3]	**450**	993	6800	96.3	96.4	96.3	0.85	730	2.1	6.2	2.6	74	90	**1MB55 ■ 3-4BC5 ■-■■■■**	4100	38.5
800 [1] [3]	**450**	993	7700	96.5	96.7	96.5	0.85	820	2.1	6.7	2.6	74	90	**1MB55 ■ 3-4BC7 ■-■■■■**	4300	43.1
8-pole: 750 rpm at 50 Hz																
160	**315 L**	741	2050	94.3	94.7	94.7	0.79	310	2.4	6.2	2.4	67	82	**1MB55 ■ 3-3AD7 ■-■■■■**	1410	6.39
200	**315 L**	742	2550	94.6	94.8	94.6	0.78	390	2.9	6.7	2.8	72	86	**1MB55 ■ 3-3AD8 ■-■■■■**	1660	8.5
250	**355 L**	744	3200	94.6	95	95	0.8	475	2.4	7.1	2.7	73	88	**1MB55 ■ 3-3BD1 ■-■■■■**	2280	13.3
315	**355 L**	744	4050	94.6	94.9	94.6	0.8	600	2.4	7	2.9	73	88	**1MB55 ■ 3-3BD2 ■-■■■■**	2310	13.8
355	**400**	742	4550	95.6	95.7	95.5	0.81	660	1.9	6.2	2.5	64	80	**1MB55 ■ 3-3BB5 ■-■■■■**	2900	21.9
400	**400**	742	5100	95.7	95.8	95.5	0.81	740	2	6.5	2.6	64	80	**1MB55 ■ 3-4AD3 ■-■■■■**	3100	24.5
450	**400**	742	5800	95.7	95.8	95.7	0.81	840	2.2	6.6	2.7	64	80	**1MB55 ■ 3-4AD5 ■-■■■■**	3300	27.5
500 [5]	**400**	744	6400	95.8	96	95.8	0.81	940	1.9	6.2	2.3	67	83	**1MB55 ■ 3-4AD7 ■-■■■■**	3800	34
560 [5]	**450**	744	7200	96	96.1	95.9	0.81	1050	1.8	6.3	2.3	67	83	**1MB55 ■ 3-4BD3 ■-■■■■**	4000	38
630 [1] [5]	**450**	744	8100	96.1	96.2	95.9	0.8	1170	1.8	6.6	2.4	67	83	**1MB55 ■ 3-4BD5 ■-■■■■**	4300	42.5

Zones			
Zone 21 (conductive and non-conductive dust occasionally) Ex tb IIIC		**1**	
Zone 22 (non-conductive dust rarely or for a short period) Ex tc IIIB		**2**	
Zone 2 (explosive gases rarely or for a short period) Ex ec IIC		**3**	
Voltages	Version		Order code
50 Hz 400 VΔ/690 VY	60 Hz 460 VΔ	**Standard**	**3 4**	–
50 Hz 500 VΔ	60 Hz 575 VΔ	Without additional charge	**4 0**	–
50 Hz 690 VΔ		Without additional charge	**4 7**	–
For other voltages and more information, see from page 6/74			■ ■	...
Types of construction	Version			Order code
Without flange	IM B3	**Standard**	**A**	–
With flange	IM B5	With additional charge	**F**	–
For other types of construction and more information, see from page 6/86			■	...
Motor protection	Version			Order code
Without		**Standard**	**A**	–
PTC thermistor with 3 temperature sensors		With additional charge	**B**	–
For other motor protection and more information, see from page 6/92			■	...
Terminal box position	Version			Order code
Terminal box base left with terminal box 45°		Without additional charge	**2**	–
Terminal box base right with terminal box 45°		**Standard**	**3**	–
For other terminal box positions and more information, see from page 6/97			■	...
Special versions				Order code(s)
Forced-air cooled (IC416)		**1MB55 ■ 3-....**	**■-■■■■ -Z**	**F90+...+...+...**
For options and information, see from page 6/116		**1MB55 ■ 3-....**	**■-■■■■ -Z**	**...+...+...+...**

[1] Terminal box 1XB1631.
[2] Terminal box position NDE can only be ordered using order code **H09** (2 × terminal box TB3R61). Order code **H08** not available.
[3] The standard version is 50 Hz 690 VΔ (voltage code **4-7**) or 60 Hz 575 VΔ (voltage code **4-0**).
[4] In the series version, the maximum speed is n_{max} = 3000 rpm. Converter operation at higher speeds on request for an additional charge.
[5] Utilization with sinusoidal supply in accordance with thermal class 155 (temperature class F).

© Innomotics 2024

Selection and ordering data

$P_{rated, 50 Hz}$	Frame size	Operating values at rated power n_{rated}	T_{rated}	$\eta_{rated, 4/4}$	$\eta_{rated, 3/4}$	$\eta_{rated, 2/4}$	$\cos\varphi_{rated, 4/4}$	I_{rated}	T_{LR}/T_{rated}	I_{LR}/I_{rated}	T_B/T_{rated}	L_{pfA}	L_{WA}	Cast-iron series 1MB58.3 Article No.	$m_{IM B3}$	J
kW	FS	rpm	Nm	%	%	%		A				dB(A)	dB(A)		kg	kgm²
_ Cooling: self-ventilated (IC411)																
_ Efficiency: IE3 Premium Efficiency																
_ Insulation: Thermal class 155 (temperature class F), IP55 degree of protection, utilization in accordance with thermal class 155 (temperature class F)																
_ Optional and suitable for converter operation with insulated bearings (L51) for $f_p \geq 2.5$ kHz; $U_{line} \leq 690$ V - IVIC-C premium insulation system																
2-pole: 3000 rpm at 50 Hz																
545 [1]	**400**	2988	1740	96.5	96.6	96.2	0.9	910	1.8	7.3	3.3	74	90	**1MB58 ■ 3-4AA3 ■-■■■■**	2900	8.9
610 [1]	**400**	2988	1950	96.5	96.6	96.5	0.91	1000	1.6	7.3	3.1	74	90	**1MB58 ■ 3-4AA5 ■-■■■■**	3000	9.8
680 [2]	**400**	2988	2150	96.7	96.8	96.6	0.91	650	1.7	7.3	3.1	74	90	**1MB58 ■ 3-4AA7 ■-■■■■**	3200	10.8
775 [1] [2] [3]	**450**	2989	2500	96.8	96.8	96.5	0.89	750	1.7	8.5	3.8	75	91	**1MB58 ■ 3-4BA3 ■-■■■■**	4000	12.3
875 [1] [2] [3]	**450**	2988	2800	96.9	97	96.7	0.89	850	1.7	7.7	3.7	75	91	**1MB58 ■ 3-4BA5 ■-■■■■**	4300	13.5
970 [1] [2] [3]	**450**	2987	3100	97	97.1	97	0.9	930	1.5	6.7	3.2	75	91	**1MB58 ■ 3-4BA7 ■-■■■■**	4500	14.7
4-pole: 1500 rpm at 50 Hz																
545	**400**	1492	3500	96.1	96.2	95.7	0.87	940	1.8	6.7	2.7	78	94	**1MB58 ■ 3-4AB3 ■-■■■■**	2800	12.8
615	**400**	1492	3950	96.3	96.4	95.9	0.87	1060	1.9	6.9	2.8	78	94	**1MB58 ■ 3-4AB5 ■-■■■■**	3000	14.4
690 [2]	**400**	1492	4400	96.4	96.5	96.2	0.88	680	2	7	2.7	78	94	**1MB58 ■ 3-4AB7 ■-■■■■**	3200	16.5
785 [2]	**450**	1492	5000	96.4	96.5	96	0.87	780	2	7.2	2.8	81	97	**1MB58 ■ 3-4BB3 ■-■■■■**	3900	22.2
880 [2]	**450**	1492	5600	96.5	96.6	96.1	0.86	890	1.7	7.2	2.8	81	97	**1MB58 ■ 3-4BB5 ■-■■■■**	4100	24.8
980 [2]	**450**	1492	6300	96.5	96.6	96.2	0.88	970	2	7.1	2.8	81	97	**1MB58 ■ 3-4BB7 ■-■■■■**	4300	27.4
6-pole: 1000 rpm at 50 Hz																
435	**400**	993	4200	95.9	96	95.7	0.84	780	2	6.7	2.8	72	88	**1MB58 ■ 3-4AC3 ■-■■■■**	2900	22
485	**400**	993	4650	96	96.1	95.7	0.86	850	2	6.7	2.7	72	88	**1MB58 ■ 3-4AC5 ■-■■■■**	3100	24.7
545 [1]	**400**	993	5200	96.1	96.2	95.9	0.86	950	2.1	6.7	2.9	72	88	**1MB58 ■ 3-4AC7 ■-■■■■**	3300	27.8
615 [1]	**450**	993	5900	96.3	96.5	96.2	0.84	1100	2.1	6.6	2.7	74	90	**1MB58 ■ 3-4BC3 ■-■■■■**	3800	34.4
690 [2]	**450**	993	6600	96.5	96.7	96.5	0.85	700	2	6.3	2.5	74	90	**1MB58 ■ 3-4BC5 ■-■■■■**	4100	38.5
780 [2]	**450**	993	7500	96.6	96.7	96.5	0.85	790	2	6.7	2.6	74	90	**1MB58 ■ 3-4BC7 ■-■■■■**	4300	43.1
8-pole: 750 rpm at 50 Hz																
335	**400**	744	4300	95.5	95.6	95.3	0.8	630	2	6.9	2.6	64	80	**1MB58 ■ 3-4AD3 ■-■■■■**	2900	21.9
375	**400**	744	4800	95.6	95.7	95.5	0.8	710	2.1	7.2	2.8	64	80	**1MB58 ■ 3-4AD5 ■-■■■■**	3100	24.5
425	**400**	744	5500	95.7	95.8	95.6	0.8	800	2.1	7.2	2.7	64	80	**1MB58 ■ 3-4AD7 ■-■■■■**	3300	27.5
485 [4]	**450**	745	6200	95.8	95.9	95.6	0.79	920	2	7	2.6	67	83	**1MB58 ■ 3-4BD3 ■-■■■■**	3800	34
545 [4]	**450**	745	7000	95.9	96	95.7	0.79	1040	2	7	2.6	67	83	**1MB58 ■ 3-4BD5 ■-■■■■**	4000	38
600 [1] [4]	**450**	745	7700	96	96.1	95.7	0.8	1130	2.1	7.3	2.6	67	83	**1MB58 ■ 3-4BD7 ■-■■■■**	4300	42.5

Zones			
Zone 21 (conductive and non-conductive dust occasionally) Ex tb IIIC		**1**	
Zone 22 (non-conductive dust rarely or for a short period) Ex tc IIIB		**2**	
Zone 2 (explosive gases rarely or for a short period) Ex ec IIC		**3**	
Voltages		Version	Order code
50 Hz 400 VΔ/690 VY	60 Hz 460 VΔ	**Standard**	**3 4** –
50 Hz 500 VΔ	60 Hz 575 VΔ	Without additional charge	**4 0** –
50 Hz 690 VΔ		Without additional charge	**4 7** –
For other voltages and more information, see from page 6/74			■ ■ ...
Types of construction		Version	Order code
Without flange	IM B3	**Standard**	**A** –
With flange	IM B5	With additional charge	**F** –
For other types of construction and more information, see from page 6/86			■ ...
Motor protection		Version	Order code
Without		**Standard**	**A** –
PTC thermistor with 3 temperature sensors		With additional charge	**B** –
For other motor protection and more information, see from page 6/92			■ ...
Terminal box position		Version	Order code
Terminal box base left with terminal box 45°		Without additional charge	**2** –
Terminal box base right with terminal box 45°		**Standard**	**3** –
For other terminal box positions and more information, see from page 6/97			■ ...
Special versions			Order code(s)
Forced-air cooled (IC416)		**1MB58 ■ 3-....**	**■-■■■■ -Z F90+...+...+...**
For options and information, see from page 6/116		**1MB58 ■ 3-....**	**■-■■■■ -Z ...+...+...+...**

[1] Terminal box 1XB1631.
[2] The standard version is 50 Hz 690 VΔ (voltage code **4-7**) or 60 Hz 575 VΔ (voltage code **4-0**).
[3] In the series version, the maximum speed is n_{max} = 3000 rpm. Converter operation at higher speeds on request for an additional charge.
[4] Utilization with sinusoidal supply in accordance with thermal class 155 (temperature class F).

© Innomotics 2024

Selection and ordering data

P_{rated}, 50 Hz	P_{rated}, 60 Hz	Frame size	Operating values at rated power n_{rated}, 50 Hz	T_{rated}, 50 Hz	Different IE class 60 Hz/P60	η_{rated}, 50 Hz, 4/4	η_{rated}, 50 Hz, 3/4	η_{rated}, 50 Hz, 2/4	cosφ rated, 50 Hz, 4/4	I_{rated}, 50 Hz, 400 V	T_{LR}/T_{rated}	I_{LR}/I_{rated}	T_B/T_{rated}	L_{pfA}, 50 Hz	L_{WA}, 50 Hz	Aluminum series 1MB10.1 Article No.	$m_{IM\ B3}$	J
kW	kW	FS	rpm	Nm		%	%	%		A				dB(A)	dB(A)		kg	kgm²
_ Cooling: self-ventilated (IC411)																		
_ Efficiency according to IEC 60034-30: IE2 High Efficiency																		
_ Insulation: Thermal class 155 (temperature class F), IP55 degree of protection, utilization in accordance with thermal class 130 (temperature class B)																		
2-pole: 3000 rpm at 50 Hz, 3600 rpm at 60 Hz [1]																		
0.18	**0.21**	**63 M**	2850	0.6	[2]	60.4	59.4	53.7	0.78	0.55	2.2	4.5	2.7	57	64	**1MB10 ■ 1-0BA2 ■-■■■■**	4	0.00022
0.25	**0.29**	**63 M**	2850	0.6	[2]	60.4	59.4	53.7	0.78	0.55	2.2	4.5	2.7	57	64	**1MB10 ■ 1-0BA2 ■-■■■■**	4	0.00022
0.37	**0.43**	**71 M**	2770	1.28	[2]	69.5	70.5	67.9	0.81	0.95	2.5	4.1	2.5	58	69	**1MB10 ■ 1-0CA2 ■-■■■■**	6	0.00029
0.55	**0.63**	**71 M**	2780	1.89	[2]	74.1	75.2	72.9	0.8	1.34	2.6	4.6	2.6	58	69	**1MB10 ■ 1-0CA3 ■-■■■■**	7	0.00041
0.75	**0.86**	**80 M**	2805	2.55		77.4	80	80.1	0.84	1.67	1.9	4.9	2.3	60	71	**1MB10 ■ 1-0DA2 ■-■■■■**	9	0.0008
1.1	**1.27**	**80 M**	2835	3.7		79.6	81.3	80.9	0.83	2.4	2.7	6	3.1	60	71	**1MB10 ■ 1-0DA3 ■-■■■■**	11	0.0011
1.5	**1.75**	**90 S**	2900	4.95		81.3	81.7	79.7	0.84	3.15	2.7	6.9	3.6	65	77	**1MB10 ■ 1-0EA0 ■-■■■■**	13	0.0017
2.2	**2.55**	**90 L**	2890	7.3		83.2	83.7	82	0.85	4.5	2.5	7.1	3.7	65	77	**1MB10 ■ 1-0EA4 ■-■■■■**	15	0.0021
3	**3.45**	**100 L**	2905	9.9		84.6	85.5	84.6	0.84	6.1	2.3	7	3.3	67	79	**1MB10 ■ 1-1AA4 ■-■■■■**	21	0.0044
4	**4.55**	**112 M**	2945	13		85.8	86.2	85.1	0.85	7.9	2.1	8	3.6	69	81	**1MB10 ■ 1-1BA2 ■-■■■■**	27	0.0092
5.5	**6.3**	**132 S**	2950	17.8		87	88	87.6	0.87	10.5	1.8	6.6	2.9	68	80	**1MB10 ■ 1-1CA0 ■-■■■■**	39	0.02
7.5	**8.6**	**132 S**	2950	24.5		88.1	88.5	87.6	0.87	14.1	2.2	7.5	3.1	68	80	**1MB10 ■ 1-1CA1 ■-■■■■**	43	0.024
11	**12.6**	**160 M**	2955	35.5		89.4	89.3	88	0.87	20.5	2.1	7.4	3.2	70	82	**1MB10 ■ 1-1DA2 ■-■■■■**	67	0.045
15	**17.3**	**160 M**	2955	48.5		90.3	90.7	90	0.88	27	2.4	7.6	3.4	70	82	**1MB10 ■ 1-1DA3 ■-■■■■**	75	0.053
18.5	**21.3**	**160 L**	2955	60		90.9	91.2	90.6	0.88	33.5	2.9	7.9	3.6	70	82	**1MB10 ■ 1-1DA4 ■-■■■■**	84	0.061
4-pole: 1500 rpm at 50 Hz. 1800 rpm at 60 Hz [1]																		
0.12	**0.14**	**63 M**	1390	0.82	[2]	59.1	56.4	49	0.66	0.44	2.4	3.1	2.5	50	58	**1MB10 ■ 1-0BB2 ■-■■■■**	5	0.00029
0.18	**0.21**	**63 M**	1385	1.24	[2]	64.7	62.4	55.7	0.65	0.62	2.6	3.3	2.6	57	64	**1MB10 ■ 1-0BB3 ■-■■■■**	5	0.00037
0.25	**0.29**	**71 M**	1395	1.71	[2]	68.5	68.4	64.2	0.69	0.76	2.4	3.7	2.5	50	61	**1MB10 ■ 1-0CB2 ■-■■■■**	6	0.00052
0.37	**0.43**	**71 M**	1395	1.71	[2]	68.5	68.4	64.2	0.69	0.76	2.4	3.7	2.5	50	61	**1MB10 ■ 1-0CB2 ■-■■■■**	6	0.00052
0.55	**0.63**	**80 M**	1440	3.65		77.1	76.8	73.7	0.74	1.39	2.2	5.3	3.1	53	64	**1MB10 ■ 1-0DB2 ■-■■■■**	10	0.0017
0.75	**0.86**	**80 M**	1440	4.95		79.6	79.9	77.5	0.76	1.79	2.2	5.6	3.1	53	64	**1MB10 ■ 1-0DB3 ■-■■■■**	11	0.0021
1.1	**1.27**	**90 S**	1425	7.4		81.4	81.8	80	0.78	2.5	2.3	5.6	2.9	56	68	**1MB10 ■ 1-0EB0 ■-■■■■**	13	0.0028
1.5	**1.75**	**90 L**	1435	10		82.8	83.5	82.2	0.79	3.3	2.6	6.4	3.4	56	68	**1MB10 ■ 1-0EB4 ■-■■■■**	16	0.0036
2.2	**2.55**	**100 L**	1455	14.4		84.3	85.1	84.2	0.81	4.65	2.1	6.9	3.3	60	72	**1MB10 ■ 1-1AB4 ■-■■■■**	21	0.0086
3	**3.45**	**100 L**	1455	19.7		85.5	86.4	85.6	0.82	6.2	2	6.9	3.1	60	72	**1MB10 ■ 1-1AB5 ■-■■■■**	25	0.011
4	**4.55**	**112 M**	1460	26		86.6	87.3	86.4	0.81	8.2	2.5	7.1	3.2	58	70	**1MB10 ■ 1-1BB2 ■-■■■■**	29	0.014
5.5	**6.3**	**132 S**	1465	36		87.7	88.4	87.6	0.8	11.3	2.3	6.9	2.9	64	76	**1MB10 ■ 1-1CB0 ■-■■■■**	42	0.022
7.5	**8.6**	**132 M**	1465	49		88.7	89.8	89.8	0.83	14.7	2.3	6.9	2.9	64	76	**1MB10 ■ 1-1CB2 ■-■■■■**	49	0.028
11	**12.6**	**160 M**	1470	71		89.8	91	90.9	0.85	21	2.1	6.7	2.8	65	77	**1MB10 ■ 1-1DB2 ■-■■■■**	71	0.055
15	**17.3**	**160 L**	1475	97		90.6	91.2	90.8	0.85	28	2.3	7.3	3	65	77	**1MB10 ■ 1-1DB4 ■-■■■■**	83	0.071

Zones					
Zone 21 (conductive and non-conductive dust occasionally) Ex tb IIIC		**1**			
Zone 22 (non-conductive dust rarely or for a short period) Ex tc IIIB		**2**			
Zone 2 (explosive gases rarely or for a short period) Ex ec IIC		**3**			
Voltages	Version				Order code
50 Hz 230 VΔ/400 VY	60 Hz [1] 460 VY	**Standard**	**2**	**2**	–
50 Hz 400 VΔ/690 VY	60 Hz [1] 460 VΔ	**Standard**	**3**	**4**	–
50 Hz 500 VY		Without additional charge	**2**	**7**	–
50 Hz 500 VΔ		Without additional charge	**4**	**0**	–
For other voltages [1] and more information, see from page 6/70			**9**	**0**	...
Types of construction		Version			Order code
Without flange	IM B3 [2]	**Standard**		**A**	–
With flange	IM B5 [2]	With additional charge		**F**	–
With flange	IM B14 [2]	With additional charge		**K**	–
For other types of construction and more information, see from page 6/75				■	...
Motor protection		Version			
Without		**Standard**		**A**	
3 temperature sensors (frame sizes 80, 90 or 100 to 200)		With additional charge		**B**	
For other motor protection and more information, see from page 6/88				■	
Terminal box position		Version			
Terminal box at top		**Standard**		**4**	
For other terminal box positions and more information, see from page 6/93				■	
Special versions					Order code(s)
For options, see from page 6/98			**1MB10 ■ 1-....**	**■-■■■■ -Z**	...+...+...+...

For footnotes, see page 6/49

© Innomotics 2024

Selection and ordering data

P_{rated}, 50 Hz	P_{rated}, 60 Hz	Frame size	Operating values at rated power n_{rated}, 50 Hz	T_{rated}, 50 Hz	Different IE class 60 Hz/P60	η_{rated}, 50 Hz, 4/4	η_{rated}, 50 Hz, 3/4	η_{rated}, 50 Hz, 2/4	cosφ rated, 50 Hz, 4/4	I_{rated}, 50 Hz, 400 V	T_{LR}/T_{rated}	I_{LR}/I_{rated}	T_B/T_{rated}	L_{pfA}, 50 Hz	L_{WA}, 50 Hz	Aluminum series 1MB10.1 Article No.	$m_{IM\ B3}$	J
kW	kW	FS	rpm	Nm		%	%	%		A				dB(A)	dB(A)		kg	kgm²
_ Cooling: self-ventilated (IC411)																		
_ Efficiency according to IEC 60034-30: IE2 High Efficiency																		
_ Insulation: Thermal class 155 (temperature class F), IP55 degree of protection, utilization in accordance with thermal class 130 (temperature class B)																		
6-pole: 1000 rpm at 50 Hz, 1200 rpm at 60 Hz [1]																		
0.09	**0.11**	**63 M**	895	0.96	[2]	42.7	38.5	30.4	0.63	0.48	1.8	2	1.9	56	62	**1MB10 ■ 1-0BC2 ■-■■■■**	4	0.00037
0.18	**0.21**	**71 M**	875	1.96	[2]	56.6	56.9	52.7	0.68	0.68	2.2	2.5	2.3	46	57	**1MB10 ■ 1-0CC2 ■-■■■■**	6	0.00055
0.25	**0.29**	**71 M**	870	2.75	[2]	61.6	62.7	59.2	0.7	0.84	2.3	2.6	2.3	46	57	**1MB10 ■ 1-0CC3 ■-■■■■**	7	0.0008
0.37	**0.43**	**80 M**	925	3.8		67.6	67.9	64.4	0.69	1.14	2.1	4	2.4	42	53	**1MB10 ■ 1-0DC2 ■-■■■■**	9	0.0017
0.55	**0.63**	**80 M**	935	5.6		73.1	73.8	70.8	0.66	1.65	2.5	4.4	2.9	42	53	**1MB10 ■ 1-0DC3 ■-■■■■**	12	0.0025
0.75	**0.86**	**90 S**	935	7.7		75.9	76.8	74.5	0.7	2.05	2	4.1	2.5	43	55	**1MB10 ■ 1-0EC0 ■-■■■■**	13	0.003
1.1	**1.27**	**90 L**	935	11.2	IE1	78.1	79.3	77.7	0.7	2.9	2.2	4.4	2.6	43	55	**1MB10 ■ 1-0EC4 ■-■■■■**	16	0.004
1.5	**1.75**	**100 L**	970	14.8		79.8	80.5	79	0.73	3.7	2	5.4	2.8	59	71	**1MB10 ■ 1-1AC4 ■-■■■■**	25	0.011
2.2	**2.55**	**112 M**	965	22		81.8	82.7	81.7	0.75	5.2	2	5	2.8	62	74	**1MB10 ■ 1-1BC2 ■-■■■■**	29	0.014
3	**3.45**	**132 S**	970	29.5		83.3	83.4	81	0.72	7.2	1.6	5	2.5	63	75	**1MB10 ■ 1-1CC0 ■-■■■■**	38	0.024
4	**4.55**	**132 M**	970	39.5		84.6	85.5	84.3	0.75	9.1	1.6	5	2.3	63	75	**1MB10 ■ 1-1CC2 ■-■■■■**	43	0.029
5.5	**6.3**	**132 M**	970	54		86	87.1	86.4	0.76	12.1	1.9	5.6	2.6	63	75	**1MB10 ■ 1-1CC3 ■-■■■■**	52	0.037
7.5	**8.6**	**160 M**	975	73		87.2	87.9	87.2	0.74	16.8	1.9	4.7	2.2	67	79	**1MB10 ■ 1-1DC2 ■-■■■■**	77	0.075
11	**12.6**	**160 L**	975	108		88.7	89.7	89.3	0.76	23.5	1.9	4.8	2.2	67	79	**1MB10 ■ 1-1DC4 ■-■■■■**	93	0.098
8-pole: 750 rpm at 50 Hz. 900 rpm at 60 Hz [1]																		
0.09	**0.11**	**71 M**	630	1.36	[2]	40.1	40.6	35.8	0.67	0.5	1.7	1.6	1.7	59	63	**1MB10 ■ 1-1AD4 ■-■■■■**	6	0.00077
0.12	**0.14**	**71 M**	640	1.79	[2]	39.8	39.3	34.5	0.66	0.66	1.8	1.8	1.8	48	59	**1MB10 ■ 1-1AD5 ■-■■■■**	7	0.0008
0.75	**0.86**	**100 L**	705	10.2		66.2	65.7	61.5	0.61	2.7	1.5	3.2	2.1	60	72	**1MB10 ■ 1-1BD2 ■-■■■■**	21	0.0086
1.1	**1.27**	**100 L**	695	15.1		70.8	72.3	69.6	0.65	3.45	1.4	3.2	1.9	60	72	**1MB10 ■ 1-1CD0 ■-■■■■**	25	0.011
1.5	**1.75**	**112 M**	725	19.8		74.1	73.9	71.2	0.63	4.65	1.6	4	2.4	63	75	**1MB10 ■ 1-1CD2 ■-■■■■**	34	0.017
2.2	**2.55**	**132 S**	725	29		77.6	78.2	76.6	0.62	6.6	1.4	3.5	2	63	75	**1MB10 ■ 1-1DD2 ■-■■■■**	46	0.034
3	**3.45**	**132 M**	720	40	IE1	80	80.7	79.2	0.62	8.7	1.4	3.7	2	63	75	**1MB10 ■ 1-1DD3 ■-■■■■**	52	0.037
4	**4.55**	**160 M**	730	52		81.9	82.6	81.4	0.67	10.5	1.6	3.7	1.9	63	75	**1MB10 ■ 1-1DD4 ■-■■■■**	69	0.065
5.5	**6.3**	**160 M**	730	72		83.8	84.2	83	0.67	14.1	1.7	3.9	2	63	75	**1MB10 ■ 1-1DD3 ■-■■■■**	82	0.083
7.5	**8.6**	**160 L**	725	99		85.3	86.4	86	0.7	18.1	1.6	3.8	1.9	63	75	**1MB10 ■ 1-1DD4 ■-■■■■**	94	0.098

Zones			
Zone 21 (conductive and non-conductive dust occasionally) Ex tb IIIC		**1**	
Zone 22 (non-conductive dust rarely or for a short period) Ex tc IIIB		**2**	
Zone 2 (explosive gases rarely or for a short period) Ex ec IIC		**3**	
Voltages	Version		Order code
50 Hz 230 VΔ/400 VY 60 Hz [1] 460 VY	**Standard**	**2 2**	–
50 Hz 400 VΔ/690 VY 60 Hz [1] 460 VΔ	**Standard**	**3 4**	–
50 Hz 500 VY	Without additional charge	**2 7**	–
50 Hz 500 VΔ	Without additional charge	**4 0**	–
For other voltages [1] and more information, see from page 6/70		**9 0**	**...**
Types of construction	Version		Order code
Without flange IM B3 [2]	**Standard**	**A**	–
With flange IM B5 [2]	With additional charge	**F**	–
With flange IM B14 [2]	With additional charge	**K**	–
For other types of construction and more information, see from page 6/75		■	**...**
Motor protection	Version		
Without	**Standard**	**A**	
3 temperature sensors (frame sizes 80, 90 or 100 to 200)	With additional charge	**B**	
For other motor protection and more information, see from page 6/88		■	
Terminal box position	Version		
Terminal box at top	**Standard**	**4**	
For other terminal box positions and more information, see from page 6/93		■	
Special versions			Order code(s)
For options, see from page 6/98		**1MB10 ■ 1-.... ■-■■■■ -Z**	**...+...+...+...**

6

For footnotes, see page 6/49

© Innomotics 2024

Innomotics XP 1MB1, 1MB5 explosion-protected motors

IE2

Please note minimum legal efficiencies in the European Economic Area

Cast-iron series 1MB15, 1MB16 – self-ventilated

Selection and ordering data

P_{rated}, 50 Hz	P_{rated}, 60 Hz	Frame size	Operating values at rated power n_{rated}, 50 Hz	T_{rated}, 50 Hz	Different IE class 60 Hz/P60	η_{rated}, 50 Hz, 4/4	η_{rated}, 50 Hz, 3/4	η_{rated}, 50 Hz, 2/4	$\cos\varphi$ rated, 50 Hz, 4/4	I_{rated}, 50 Hz, 400 V	T_{LR}/T_{rated}	I_{LR}/I_{rated}	T_B/T_{rated}	L_{pfA}, 50 Hz	L_{WA}, 50 Hz	Cast-iron series 1MB15.1 – *Basic Line* 1MB16.1 – *Performance Line* Article No.	$m_{IM\ B3}$	J
kW	kW	FS	rpm	Nm		%	%	%		A				dB(A)	dB(A)		kg	kgm²
_ Cooling: self-ventilated (IC411)																		
_ Efficiency according to IEC 60034-30: IE2 High Efficiency																		
_ Insulation: Thermal class 155 (temperature class F), IP55 degree of protection, utilization in accordance with thermal class 130 (temperature class B)																		
2-pole: 3000 rpm at 50 Hz, 3600 rpm at 60 Hz [1]																		
0.37	**0.43**	**71 M**	2770	1.28		69.5	70.5	67.9	0.81	0.95	2.5	4.1	2.5	58	69	**1MB1 5 ■ 1-0CA2 ■-■■■■**	11.5	0.0004
0.55	**0.63**	**71 M**	2780	1.89		74.1	75.2	72.9	0.8	1.34	2.6	4.6	2.6	58	69	**1MB1 5 ■ 1-0CA3 ■-■■■■**	13	0.00045
0.75	**0.86**	**80 M**	2805	2.55		77.4	80	80.1	0.84	1.67	1.9	4.9	2.3	60	71	**1MB1 5 ■ 1-0DA2 ■-■■■■**	16	0.0008
1.1	**1.27**	**80 M**	2835	3.7		79.6	81.3	80.9	0.83	2.4	2.7	6	3.1	60	71	**1MB1 5 ■ 1-0DA3 ■-■■■■**	18	0.0011
1.5	**1.75**	**90 S**	2900	4.95		81.3	81.7	79.7	0.84	3.15	2.7	6.9	3.6	65	77	**1MB1 5 ■ 1-0EA0 ■-■■■■**	23	0.0017
2.2	**2.55**	**90 L**	2890	7.3		83.2	83.7	82	0.85	4.5	2.5	7.1	3.7	65	77	**1MB1 5 ■ 1-0EA4 ■-■■■■**	25.5	0.0021
3	**3.45**	**100 L**	2905	9.9		84.6	85.5	84.6	0.84	6.1	2.3	7	3.3	67	79	**1MB1 ■■ 1-1AA4 ■-■■■■**	32	0.0044
4	**4.55**	**112 M**	2945	13		85.8	86.2	85.1	0.85	7.9	2.1	8	3.6	69	81	**1MB1 ■■ 1-1BA2 ■-■■■■**	39	0.0092
5.5	**6.3**	**132 S**	2950	17.8		87	88	87.6	0.87	10.5	1.8	6.6	2.9	68	80	**1MB1 ■■ 1-1CA0 ■-■■■■**	57	0.02
7.5	**8.6**	**132 S**	2950	24.5		88.1	88.5	87.6	0.87	14.1	2.2	7.5	3.1	68	80	**1MB1 ■■ 1-1CA1 ■-■■■■**	61	0.024
11	**12.6**	**160 M**	2955	35.5		89.4	89.3	88	0.87	20.5	2.1	7.4	3.2	70	82	**1MB1 ■■ 1-1DA2 ■-■■■■**	96	0.045
15	**17.3**	**160 M**	2955	48.5		90.3	90.7	90	0.88	27	2.4	7.6	3.4	70	82	**1MB1 ■■ 1-1DA3 ■-■■■■**	104	0.053
18.5	**21.3**	**160 L**	2955	60		90.9	91.2	90.6	0.88	33.5	2.9	7.9	3.6	70	82	**1MB1 ■■ 1-1DA4 ■-■■■■**	113	0.061
22	**24.5**	**180 M**	2940	71		91.3	91.6	90.9	0.87	40	2.7	7.4	3.6	77	84	**1MB1 ■■ 1-1EA2 ■-■■■■**	145	0.069
30	**33.5**	**200 L**	2960	97		92	92.1	91.5	0.87	54	2.5	6.9	3.3	78	85	**1MB1 ■■ 1-2AA4 ■-■■■■**	200	0.13
37	**41.5**	**200 L**	2960	119		92.5	92.7	92.1	0.88	66	2.7	7.4	3.5	78	85	**1MB1 ■■ 1-2AA5 ■-■■■■**	225	0.15
45	**51**	**225 M**	2965	145		92.9	93.1	92.5	0.88	79	2.7	7.8	3.7	76	89	**1MB1 ■■ 1-2BA2 ■-■■■■**	295	0.23
55	**62**	**250 M**	2970	177		93.2	93.3	92.4	0.88	97	2.3	6.8	3.1	76	89	**1MB1 ■■ 1-2CA2 ■-■■■■**	360	0.4
75	**84**	**280 S**	2978	240		93.8	93.6	92.4	0.86	134	2.5	7.2	3.2	76	89	**1MB1 ■■ 1-2DA0 ■-■■■■**	490	0.71
90	**101**	**280 M**	2975	290		94.1	94.2	93.5	0.88	157	2.5	7.1	3.1	76	89	**1MB1 ■■ 1-2DA2 ■-■■■■**	530	0.83
110	**123**	**315 S**	2982	350		94.3	94.2	93.3	0.9	187	2.4	7.3	3	77	91	**1MB1 ■■ 1-3AA0 ■-■■■■**	720	1.3
132	**148**	**315 M**	2982	425		94.6	94.7	94.1	0.91	220	2.4	7.2	3.1	77	91	**1MB1 ■■ 1-3AA2 ■-■■■■**	880	1.6
160	**180**	**315 L**	2982	510		94.8	94.9	94.3	0.92	265	2.3	7	3.1	80	95	**1MB1 ■■ 1-3AA4 ■-■■■■**	930	1.8
200	**224**	**315 L**	2982	640		95	95.2	94.8	0.92	330	2.5	7.3	3	80	95	**1MB1 ■■ 1-3AA5 ■-■■■■**	1130	2.2

Basic Line				**5**	
Performance Line				**6**	
Zones					
Zone 21 (conductive and non-conductive dust occasionally) Ex tb IIIC				**1**	
Zone 22 (non-conductive dust rarely or for a short period) Ex tc IIIB				**2**	
Zone 2 (explosive gases rarely or for a short period) Ex ec IIC				**3**	
Voltages [4]			Version		Order code
50 Hz 230 VΔ/400 VY	60 Hz [1] 460 VY		**Standard**	**2 2**	–
50 Hz 400 VΔ/690 VY	60 Hz [1] 460 VΔ		**Standard**	**3 4**	–
50 Hz 500 VY			Without additional charge	**2 7**	–
50 Hz 500 VΔ			Without additional charge	**4 0**	–
For other voltages [1] and more information, see from page 6/71				**9 0**	**...**
Types of construction			Version		Order code
Without flange	IM B3 [3]		**Standard**	**A**	–
With flange	IM B5 [3]		With additional charge	**F**	–
With flange	IM B14 [3]		With additional charge	**K**	–
For other types of construction and more information, see from page 6/78				■	**...**
Motor protection		Line	Version		
Without		Only possible for **Basic Line**	**Standard**	**A**	
PTC thermistor with 3 temperature sensors		**Basic Line**	With additional charge	**B**	
		Performance Line	**Standard**	**B**	
For other motor protection and more information, see from page 6/89				■	
Terminal box position			Version		
Terminal box at top			**Standard**	**4**	
For other terminal box positions and more information, see from page 6/94				■	
Special versions					Order code(s)
For options, see from page 6/102				**1MB1 ■■ 1-....**	**■-■■■■ -Z** **...+...+...+...**

For footnotes, see page 6/49

© Innomotics 2024

Selection and ordering data

P_{rated}, 50 Hz	P_{rated}, 60 Hz	Frame size	Operating values at rated power n_{rated}, 50 Hz	T_{rated}, 50 Hz	Different IE class 60 Hz/P60	η_{rated}, 50 Hz, 4/4	η_{rated}, 50 Hz, 3/4	η_{rated}, 50 Hz, 2/4	$\cos\varphi$ rated, 50 Hz, 4/4	I_{rated}, 50 Hz, 400 V	T_{LR}/T_{rated}	I_{LR}/I_{rated}	T_B/T_{rated}	L_{pfA}, 50 Hz	L_{WA}, 50 Hz	Cast-iron series 1MB15.1 – *Basic Line* 1MB16.1 – *Performance Line* Article No.	$m_{IM\ B3}$	J
kW	kW	FS	rpm	Nm		%	%	%		A				dB(A)	dB(A)		kg	kgm²
_ Cooling: self-ventilated (IC411)																		
_ Efficiency according to IEC 60034-30: IE2 High Efficiency																		
_ Insulation: Thermal class 155 (temperature class F), IP55 degree of protection, utilization in accordance with thermal class 130 (temperature class B)																		
4-pole: 1500 rpm at 50 Hz, 1800 rpm at 60 Hz [1]																		
0.25	**0.29**	**71 M**	1395	1.71		68.5	68.4	64.2	0.69	0.76	2.4	3.7	2.5	50	61	**1MB1 5 ■ 1-0CB2 ■-■■■■**	12	0.00076
0.37	**0.43**	**71 M**	1380	2.55		72.7	73.2	69.9	0.72	1.02	2.5	4	2.5	59	67	**1MB1 5 ■ 1-0CB3 ■-■■■■**	13	0.00095
0.55	**0.63**	**80 M**	1440	3.65		77.1	76.8	73.7	0.74	1.39	2.2	5.3	3.1	53	64	**1MB1 5 ■ 1-0DB2 ■-■■■■**	17	0.0017
0.75	**0.86**	**80 M**	1440	4.95		79.6	79.9	77.5	0.76	1.79	2.2	5.6	3.1	53	64	**1MB1 5 ■ 1-0DB3 ■-■■■■**	18.5	0.0021
1.1	**1.27**	**90 S**	1425	7.4		81.4	81.8	80	0.78	2.5	2.3	5.6	2.9	56	68	**1MB1 5 ■ 1-0EB0 ■-■■■■**	23	0.0028
1.5	**1.75**	**90 L**	1435	10		82.8	83.5	82.2	0.79	3.3	2.6	6.4	3.4	56	68	**1MB1 5 ■ 1-0EB4 ■-■■■■**	25	0.0036
2.2	**2.55**	**100 L**	1455	14.4		84.3	85.1	84.2	0.81	4.65	2.1	6.9	3.3	60	72	**1MB1 ■■ 1-1AB4 ■-■■■■**	32	0.0086
3	**3.45**	**100 L**	1455	19.7		85.5	86.4	85.6	0.82	6.2	2	6.9	3.1	60	72	**1MB1 ■■ 1-1AB5 ■-■■■■**	37	0.011
4	**4.55**	**112 M**	1460	26		86.6	87.3	86.4	0.81	8.2	2.5	7.1	3.2	58	70	**1MB1 ■■ 1-1BB2 ■-■■■■**	46	0.014
5.5	**6.3**	**132 S**	1465	36		87.7	88.4	87.6	0.8	11.3	2.3	6.9	2.9	64	76	**1MB1 ■■ 1-1CB0 ■-■■■■**	61	0.022
7.5	**8.6**	**132 M**	1465	49		88.7	89.8	89.8	0.83	14.7	2.3	6.9	2.9	64	76	**1MB1 ■■ 1-1CB2 ■-■■■■**	75	0.028
11	**12.6**	**160 M**	1470	71		89.8	91	90.9	0.85	21	2.1	6.7	2.8	65	77	**1MB1 ■■ 1-1DB2 ■-■■■■**	96	0.055
15	**17.3**	**160 L**	1475	97		90.6	91.2	90.8	0.85	28	2.3	7.3	3	65	77	**1MB1 ■■ 1-1DB4 ■-■■■■**	104	0.071
18.5	**21.3**	**180 M**	1465	121		91.2	92	91.9	0.84	35	2.5	7.2	3.4	61	74	**1MB1 ■■ 1-1EB2 ■-■■■■**	160	0.12
22	**25.3**	**180 L**	1465	143		91.6	92.2	91.9	0.84	41.5	2.6	7.3	3.5	69	76	**1MB1 ■■ 1-1EB4 ■-■■■■**	170	0.13
30	**34.5**	**200 L**	1470	195		92.3	92.8	92.5	0.84	56	2.5	6.7	3.7	70	77	**1MB1 ■■ 1-2AB5 ■-■■■■**	230	0.2
37	**42.5**	**225 S**	1470	240		92.7	93.5	93.5	0.88	65	2.3	6.6	2.9	66	79	**1MB1 ■■ 1-2BB0 ■-■■■■**	280	0.42
45	**52**	**225 M**	1475	290		93.1	93.8	93.7	0.87	80	2.5	6.9	3.1	66	79	**1MB1 ■■ 1-2BB2 ■-■■■■**	305	0.46
55	**63**	**250 M**	1480	355		93.5	93.9	93.5	0.85	100	2.7	6.8	3	66	79	**1MB1 ■■ 1-2CB2 ■-■■■■**	385	0.75
75	**86**	**280 S**	1485	480		94	94.2	93.8	0.87	132	2.5	6.8	3	71	85	**1MB1 ■■ 1-2DB0 ■-■■■■**	550	1.3
90	**104**	**280 M**	1486	580		94.2	94.3	93.6	0.87	159	2.6	7.3	3.1	71	85	**1MB1 ■■ 1-2DB2 ■-■■■■**	570	1.4
110	**127**	**315 S**	1490	700		94.5	94.6	94	0.86	195	2.7	7.4	3	72	86	**1MB1 ■■ 1-3AB0 ■-■■■■**	740	2
132	**152**	**315 M**	1490	850		94.7	94.9	94.6	0.87	230	2.7	7.1	2.9	75	89	**1MB1 ■■ 1-3AB2 ■-■■■■**	870	2.3
160	**184**	**315 L**	1490	1030		94.9	95	94.5	0.87	280	2.8	7.2	3.1	76	91	**1MB1 ■■ 1-3AB4 ■-■■■■**	940	2.8
200	**230**	**315 L**	1490	1280		95.1	95.3	94.7	0.87	350	3.1	7.5	3.2	77	92	**1MB1 ■■ 1-3AB5 ■-■■■■**	1140	3.5

Basic Line			**5**	
Performance Line			**6**	
Zones				
Zone 21 (conductive and non-conductive dust occasionally) Ex tb IIIC			**1**	
Zone 22 (non-conductive dust rarely or for a short period) Ex tc IIIB			**2**	
Zone 2 (explosive gases rarely or for a short period) Ex ec IIC			**3**	
Voltages [4]		Version		Order code
50 Hz 230 VΔ/400 VY	60 Hz [1] 460 VY	**Standard**	**2 2**	–
50 Hz 400 VΔ/690 VY	60 Hz [1] 460 VΔ	**Standard**	**3 4**	–
50 Hz 500 VY		Without additional charge	**2 7**	–
50 Hz 500 VΔ		Without additional charge	**4 0**	–
For other voltages [1] and more information, see from page 6/71			**9 0**	...
Types of construction		Version		Order code
Without flange	IM B3 [3]	**Standard**	**A**	–
With flange	IM B5 [3]	With additional charge	**F**	–
With flange	IM B14 [3]	With additional charge	**K**	–
For other types of construction and more information, see from page 6/78			■	...
Motor protection	Line	Version		
Without	Only possible for **Basic Line**	**Standard**	**A**	
PTC thermistor with 3 temperature sensors	**Basic Line**	With additional charge	**B**	
	Performance Line	**Standard**	**B**	
For other motor protection and more information, see from page 6/89			■	
Terminal box position		Version		
Terminal box at top		**Standard**	**4**	
For other terminal box positions and more information, see from page 6/94			■	
Special versions				Order code(s)
For options, see from page 6/102			**1MB1 ■■ 1- .... ■-■■■■ -Z**	...+...+...+...

For footnotes, see page 6/49

© Innomotics 2024

Innomotics XP 1MB1, 1MB5 explosion-protected motors

IE2

Please note minimum legal efficiencies in the European Economic Area

Cast-iron series 1MB15, 1MB16 – self-ventilated

Selection and ordering data

P_{rated}, 50 Hz	P_{rated}, 60 Hz	Frame size	Operating values at rated power n_{rated}, 50 Hz	T_{rated}, 50 Hz	Different IE class 60 Hz/P60	η_{rated}, 50 Hz, 4/4	η_{rated}, 50 Hz, 3/4	η_{rated}, 50 Hz, 2/4	$\cos\varphi$ rated, 50 Hz, 4/4	I_{rated}, 50 Hz, 400 V	T_{LR}/T_{rated}	I_{LR}/I_{rated}	T_B/T_{rated}	L_{pfA}, 50 Hz	L_{WA}, 50 Hz	Cast-iron series 1MB15.1 – *Basic Line* 1MB16.1 – *Performance Line* Article No.	$m_{IM\ B3}$	J
kW	kW	FS	rpm	Nm		%	%	%		A				dB(A)	dB(A)		kg	kgm²
_ Cooling: self-ventilated (IC411)																		
_ Efficiency according to IEC 60034-30: IE2 High Efficiency																		
_ Insulation: Thermal class 155 (temperature class F), IP55 degree of protection, utilization in accordance with thermal class 130 (temperature class B)																		
6-pole: 1000 rpm at 50 Hz, 1200 rpm at 60 Hz [1]																		
0.18	**0.21**	**71 M**	875	1.96		56.6	56.9	52.7	0.68	0.68	2.2	2.5	2.3	46	57	**1MB1 5 ■ 1-0CC2 ■-■■■■**	11.5	0.00077
0.25	**0.29**	**71 M**	870	2.75		61.6	62.7	59.2	0.7	0.84	2.3	2.6	2.3	46	57	**1MB1 5 ■ 1-0CC3 ■-■■■■**	12.5	0.001
0.37	**0.43**	**80 M**	925	3.8		67.6	67.9	64.4	0.69	1.14	2.1	4	2.4	42	53	**1MB1 5 ■ 1-0DC2 ■-■■■■**	16.5	0.0017
0.55	**0.63**	**80 M**	935	5.6		73.1	73.8	70.8	0.66	1.65	2.5	4.4	2.9	42	53	**1MB1 5 ■ 1-0DC3 ■-■■■■**	18.5	0.0025
0.75	**0.86**	**90 S**	935	7.7		75.9	76.8	74.5	0.7	2.05	2	4.1	2.5	43	55	**1MB1 5 ■ 1-0EC0 ■-■■■■**	23	0.003
1.1	**1.27**	**90 L**	935	11.2	IE1	78.1	79.3	77.7	0.7	2.9	2.2	4.4	2.6	43	55	**1MB1 5 ■ 1-0EC4 ■-■■■■**	26.5	0.004
1.5	**1.75**	**100 L**	970	14.8		79.8	80.5	79	0.73	3.7	2	5.4	2.8	59	71	**1MB1 ■■ 1-1AC4 ■-■■■■**	36	0.011
2.2	**2.55**	**112 M**	965	22		81.8	82.7	81.7	0.75	5.2	2	5	2.8	62	74	**1MB1 ■■ 1-1BC2 ■-■■■■**	41	0.014
3	**3.45**	**132 S**	970	29.5		83.3	83.4	81	0.72	7.2	1.6	5	2.5	63	75	**1MB1 ■■ 1-1CC0 ■-■■■■**	56	0.024
4	**4.55**	**132 M**	970	39.5		84.6	85.5	84.3	0.75	9.1	1.6	5	2.3	63	75	**1MB1 ■■ 1-1CC2 ■-■■■■**	61	0.029
5.5	**6.3**	**132 M**	970	54		86	87.1	86.4	0.76	12.1	1.9	5.6	2.6	63	75	**1MB1 ■■ 1-1CC3 ■-■■■■**	70	0.037
7.5	**8.6**	**160 M**	975	73		87.2	87.9	87.2	0.74	16.8	1.9	4.7	2.2	67	79	**1MB1 ■■ 1-1DC2 ■-■■■■**	106	0.075
11	**12.6**	**160 L**	975	108		88.7	89.7	89.3	0.76	23.5	1.9	4.8	2.2	67	79	**1MB1 ■■ 1-1DC4 ■-■■■■**	122	0.098
15	**18**	**180 L**	975	147		89.7	90.1	89.5	0.78	31	2.5	6	3.1	57	70	**1MB1 ■■ 1-1EC4 ■-■■■■**	155	0.17
18.5	**22**	**200 L**	978	181	IE1	90.4	91.3	91.2	0.82	36	2.4	5.8	2.6	63	76	**1MB1 ■■ 1-2AC4 ■-■■■■**	200	0.25
22	**26.5**	**200 L**	978	215	IE1	90.9	91.7	91.4	0.82	42.5	2.5	6.2	2.6	63	76	**1MB1 ■■ 1-2AC5 ■-■■■■**	220	0.3
30	**36**	**225 M**	980	290	IE1	91.7	92.5	92.3	0.83	57	2.5	5.6	2.7	65	78	**1MB1 ■■ 1-2BC2 ■-■■■■**	300	0.58
37	**44.5**	**250 M**	982	360	IE1	92.2	93.1	93.1	0.83	70	2.8	6	2.5	62	77	**1MB1 ■■ 1-2CC2 ■-■■■■**	370	0.86
45	**54**	**280 S**	985	435	IE1	92.7	93.4	93.2	0.84	83	2.7	6.3	2.6	65	79	**1MB1 ■■ 1-2DC0 ■-■■■■**	460	1.1
55	**66**	**280 M**	985	530	IE1	93.1	93.9	94	0.86	99	2.5	6.4	2.6	65	79	**1MB1 ■■ 1-2DC2 ■-■■■■**	510	1.37
75	**90**	**315 S**	988	720	IE1	93.7	94	93.6	0.84	138	2.5	6.7	2.8	65	79	**1MB1 ■■ 1-3AC0 ■-■■■■**	660	2.1
90	**108**	**315 M**	988	870	IE1	94	94.3	93.6	0.84	165	2.6	6.9	2.8	65	79	**1MB1 ■■ 1-3AC2 ■-■■■■**	730	2.5
110	**132**	**315 L**	988	1060	IE1	94.3	94.6	94.5	0.86	196	2.7	7	2.8	68	82	**1MB1 ■■ 1-3AC4 ■-■■■■**	940	3.6
132	**158**	**315 L**	988	1280		94.6	94.9	94.7	0.86	235	3	7.5	2.9	69	84	**1MB1 ■■ 1-3AC5 ■-■■■■**	990	4.02
160	**192**	**315 L**	988	1550		94.8	94.7	94.4	0.86	285	3.1	7.7	3.3	69	84	**1MB1 ■■ 1-3AC6 ■-■■■■**	1160	4.7

Basic Line				**5**	
Performance Line				**6**	
Zones					
Zone 21 (conductive and non-conductive dust occasionally) Ex tb IIIC				**1**	
Zone 22 (non-conductive dust rarely or for a short period) Ex tc IIIB				**2**	
Zone 2 (explosive gases rarely or for a short period) Ex ec IIC				**3**	
Voltages [4]			Version		Order code
50 Hz 230 VΔ/400 VY	60 Hz [1] 460 VY		**Standard**	**2 2**	–
50 Hz 400 VΔ/690 VY	60 Hz [1] 460 VΔ		**Standard**	**3 4**	–
50 Hz 500 VY			Without additional charge	**2 7**	–
50 Hz 500 VΔ			Without additional charge	**4 0**	–
For other voltages [1] and more information, see from page 6/71				**9 0**	**...**
Types of construction			Version		Order code
Without flange	IM B3 [3]		**Standard**	**A**	–
With flange	IM B5 [3]		With additional charge	**F**	–
With flange	IM B14 [3]		With additional charge	**K**	–
For other types of construction and more information, see from page 6/78				■	**...**
Motor protection		Line	Version		
Without		Only possible for **Basic Line**	**Standard**	**A**	
PTC thermistor with 3 temperature sensors		**Basic Line**	With additional charge	**B**	
		Performance Line	**Standard**	**B**	
For other motor protection and more information, see from page 6/89				■	
Terminal box position			Version		
Terminal box at top			**Standard**	**4**	
For other terminal box positions and more information, see from page 6/94				■	
Special versions					Order code(s)
For options, see from page 6/102				**1MB1 ■■ 1- .... ■-■■■■ -Z**	**...+...+...+...**

For footnotes, see page 6/49

© Innomotics 2024

Selection and ordering data

P_{rated}, 50 Hz	P_{rated}, 60 Hz	Frame size	Operating values at rated power: n_{rated}, 50 Hz	T_{rated}, 50 Hz	Different IE class 60 Hz/P60	η_{rated}, 50 Hz, 4/4	η_{rated}, 50 Hz, 3/4	η_{rated}, 50 Hz, 2/4	$\cos\varphi$ rated, 50 Hz, 4/4	I_{rated}, 50 Hz, 400 V	T_{LR}/T_{rated}	I_{LR}/I_{rated}	T_B/T_{rated}	L_{pfA}, 50 Hz	L_{WA}, 50 Hz	Cast-iron series 1MB15.1 – *Basic Line* 1MB16.1 – *Performance Line* Article No.	$m_{IM\ B3}$	J
kW	kW	FS	rpm	Nm		%	%	%		A				dB(A)	dB(A)		kg	kgm²
_ Cooling: self-ventilated (IC411)																		
_ Efficiency according to IEC 60034-30: IE2 High Efficiency																		
_ Insulation: Thermal class 155 (temperature class F), IP55 degree of protection, utilization in accordance with thermal class 130 (temperature class B)																		
8-pole: 750 rpm at 50 Hz, 900 rpm at 60 Hz [1]																		
0.09	**0.11**	**71 M**	630	1.36	[5]	40.1	40.6	35.8	0.67	0.5	1.7	1.6	1.7	59	63	**1MB1 5 ■ 1-0CD2 ■-■■■■**	11.5	0.00077
0.12	**0.14**	**71 M**	640	1.79		39.8	39.3	34.5	0.66	0.66	1.8	1.8	1.8	48	59	**1MB1 5 ■ 1-0CD3 ■-■■■■**	12.5	0.001
0.18	**0.21**	**80 M**	690	2.5		45.9	43.6	37.8	0.6	0.93	1.7	2.2	2.1	51	62	**1MB1 5 ■ 1-0DD2 ■-■■■■**	16.5	0.00175
0.25	**0.29**	**80 M**	705	3.4		50.6	48.1	41.9	0.55	1.3	2	2.5	2.5	51	62	**1MB1 5 ■ 1-0DD3 ■-■■■■**	18.5	0.00246
0.37	**0.43**	**90 S**	675	5.2		56.1	55.6	49.6	0.71	1.34	1.4	2.6	1.7	53	65	**1MB1 5 ■ 1-0ED0 ■-■■■■**	20	0.00225
0.55	**0.63**	**90 L**	665	7.9		61.7	63.4	59.8	0.74	1.74	1.5	2.7	1.7	53	65	**1MB1 5 ■ 1-0ED4 ■-■■■■**	21.5	0.00305
0.75	**0.86**	**100 L**	705	10.2		66.2	65.7	61.5	0.61	2.7	1.5	3.2	2.1	60	72	**1MB1 ■■ 1-1AD4 ■-■■■■**	32	0.0086
1.1	**1.27**	**100 L**	695	15.1		70.8	72.3	69.6	0.65	3.45	1.4	3.2	1.9	60	72	**1MB1 ■■ 1-1AD5 ■-■■■■**	36	0.011
1.5	**1.75**	**112 M**	725	19.8		74.1	73.9	71.2	0.63	4.65	1.6	4	2.4	63	75	**1MB1 ■■ 1-1BD2 ■-■■■■**	53	0.017
2.2	**2.55**	**132 S**	725	29		77.6	78.2	76.6	0.62	6.6	1.4	3.5	2	63	75	**1MB1 ■■ 1-1CD0 ■-■■■■**	64	0.034
3	**3.45**	**132 M**	720	40	IE1	80	80.7	79.2	0.62	8.7	1.4	3.7	2	63	75	**1MB1 ■■ 1-1CD2 ■-■■■■**	67	0.037
4	**4.55**	**160 M**	730	52		81.9	82.6	81.4	0.67	10.5	1.6	3.7	1.9	63	75	**1MB1 ■■ 1-1DD2 ■-■■■■**	98	0.065
5.5	**6.3**	**160 M**	730	72		83.8	84.2	83	0.67	14.1	1.7	3.9	2	63	75	**1MB1 ■■ 1-1DD3 ■-■■■■**	111	0.083
7.5	**8.6**	**160 L**	725	99		85.3	86.4	86	0.7	18.1	1.6	3.8	1.9	63	75	**1MB1 ■■ 1-1DD4 ■-■■■■**	123	0.098
11	**13.2**	**180 L**	720	146	IE1	86.9	88	87.6	0.7	26	2.3	4.9	2.6	72	80	**1MB1 ■■ 1-1ED4 ■-■■■■**	155	0.195
15	**18**	**200 L**	718	199		88	89.5	89.9	0.76	32.5	2.4	5.4	2.8	58	65	**1MB1 ■■ 1-2AD5 ■-■■■■**	220	0.344
18.5	**22**	**225 S**	730	240	IE1	89	89.9	89.5	0.78	38.5	2.2	5.4	2.7	59	72	**1MB1 ■■ 1-2BD0 ■-■■■■**	250	0.43
22	**26.5**	**225 M**	730	290		90.3	91.3	91.1	0.8	44	2.3	5.5	2.7	58	71	**1MB1 ■■ 1-2BD2 ■-■■■■**	270	0.5
30	**36**	**250 M**	732	390		91.3	92.2	92	0.8	59	2.4	5.6	2.7	60	73	**1MB1 ■■ 1-2CD2 ■-■■■■**	370	0.86
37	**44.5**	**280 S**	736	480		91.9	92.5	92.1	0.78	75	2.3	5.4	2.4	63	77	**1MB1 ■■ 1-2DD0 ■-■■■■**	460	1.1
45	**54**	**280 M**	738	580		92.4	92.8	92.4	0.79	89	2.5	5.7	2.5	66	80	**1MB1 ■■ 1-2DD2 ■-■■■■**	510	1.4
55	**66**	**315 S**	740	710		92.9	93.3	92.9	0.8	107	2.2	5.8	2.6	69	83	**1MB1 ■■ 1-3AD0 ■-■■■■**	640	2
75	**90**	**315 M**	738	970		93.5	94.4	94.5	0.81	143	2.3	5.9	2.7	69	84	**1MB1 ■■ 1-3AD2 ■-■■■■**	720	2.5
90	**108**	**315 L**	740	1160		93.5	94.3	94.4	0.83	167	2.2	5.8	2.5	69	84	**1MB1 ■■ 1-3AD4 ■-■■■■**	860	3.1
110	**132**	**315 L**	740	1420		94.2	95	95.1	0.82	205	2.7	6.7	2.9	74	88	**1MB1 ■■ 1-3AD5 ■-■■■■**	980	3.9
132	**158**	**315 L**	740	1700		94.4	94.8	94.4	0.81	250	2.9	7.2	3.3	76	90	**1MB1 ■■ 1-3AD6 ■-■■■■**	1070	4.5

Basic Line			**5**	
Performance Line			**6**	
Zones				
Zone 21 (conductive and non-conductive dust occasionally) Ex tb IIIC			**1**	
Zone 22 (non-conductive dust rarely or for a short period) Ex tc IIIB			**2**	
Zone 2 (explosive gases rarely or for a short period) Ex ec IIC			**3**	
Voltages [4]		Version		Order code
50 Hz 230 VΔ/400 VY	60 Hz [1] 460 VY	**Standard**	**2 2**	–
50 Hz 400 VΔ/690 VY	60 Hz [1] 460 VΔ	**Standard**	**3 4**	–
50 Hz 500 VY		Without additional charge	**2 7**	–
50 Hz 500 VΔ		Without additional charge	**4 0**	–
For other voltages [1] and more information, see from page 6/71			**9 0**	**...**
Types of construction		Version		Order code
Without flange	IM B3 [3]	**Standard**	**A**	–
With flange	IM B5 [3]	With additional charge	**F**	–
With flange	IM B14 [3]	With additional charge	**K**	–
For other types of construction and more information, see from page 6/78			■	**...**
Motor protection	Line	Version		
Without	Only possible for **Basic Line**	**Standard**	**A**	
PTC thermistor with 3 temperature sensors	**Basic Line**	With additional charge	**B**	
	Performance Line	**Standard**	**B**	
For other motor protection and more information, see from page 6/89			■	
Terminal box position		Version		
Terminal box at top		**Standard**	**4**	
For other terminal box positions and more information, see from page 6/94			■	
Special versions				Order code(s)
For options, see from page 6/102			**1MB1 ■■ 1- .... ■-■■■■ -Z**	...+...+...+...

6

For footnotes, see page 6/49

© Innomotics 2024

Innomotics XP 1MB1, 1MB5 explosion-protected motors

Aluminum series 1MB10 – self-ventilated

Selection and ordering data

P_{rated}, 50 Hz	P_{rated}, 60 Hz	Frame size	Operating values at rated power n_{rated}, 50 Hz	T_{rated}, 50 Hz	η_{rated}, 50 Hz, 4/4	η_{rated}, 50 Hz, 3/4	η_{rated}, 50 Hz, 2/4	$\cos\varphi$ rated, 50 Hz, 4/4	I_{rated}, 50 Hz, 400 V	T_{LR}/T_{rated}	I_{LR}/I_{rated}	T_B/T_{rated}	L_{pfA}, 50 Hz	L_{WA}, 50 Hz	Aluminum series 1MB10.2 Article No.	$m_{IM\ B3}$	J
kW	kW	FS	rpm	Nm	%	%	%		A				dB(A)	dB(A)		kg	kgm²
_ Cooling: self-ventilated (IC411)																	
_ Efficiency according to IEC 60034-30: IE1 Standard Efficiency																	
_ Insulation: Thermal class 155 (temperature class F), IP55 degree of protection, utilization in accordance with thermal class 130 (temperature class B)																	
2-pole: 3000 rpm at 50 Hz, 3600 rpm at 60 Hz [1]																	
3	**3.45**	**100 L**	2835	10.1	81.5	83.2	82.7	0.87	6.1	3.2	6.4	3.5	66	80	**1MB10 ■ 2-1AA4 ■-■■■■**	20	0.0034
4	**4.55**	**112 M**	2935	13	83.1	82.9	80.5	0.85	8.2	3.3	8.3	4.2	70	83	**1MB10 ■ 2-1BA2 ■-■■■■**	25	0.0067
5.5	**6.3**	**132 S**	2910	18	84.7	85.8	85.3	0.88	10.7	1.8	5.7	2.6	68	82	**1MB10 ■ 2-1CA0 ■-■■■■**	35	0.013
7.5	**8.6**	**132 S**	2925	24.5	86	86.6	86.1	0.88	14.3	2.2	6.8	3.1	68	82	**1MB10 ■ 2-1CA1 ■-■■■■**	40	0.016
11	**12.6**	**160 M**	2925	36	87.6	88.2	87	0.86	21	2	5.7	2.7	79	86	**1MB10 ■ 2-1DA2 ■-■■■■**	60	0.03
15	**17.3**	**160 M**	2935	49	88.7	88.9	87.2	0.85	28.5	2.4	6.8	3.2	78	85	**1MB10 ■ 2-1DA3 ■-■■■■**	68	0.036
18.5	**21.3**	**160 L**	2935	60	89.3	89.7	88.5	0.87	34.5	2.7	7.6	3.4	78	85	**1MB10 ■ 2-1DA4 ■-■■■■**	78	0.044
4-pole: 1500 rpm at 50 Hz. 1800 rpm at 60 Hz [1]																	
2.2	**2.55**	**100 L**	1425	14.7	79.7	80.3	78.1	0.81	4.9	2.3	5.1	2.7	60	72	**1MB10 ■ 2-1AB4 ■-■■■■**	18	0.0059
3	**3.45**	**100 L**	1425	20	81.5	82.6	81.5	0.85	6.3	2.4	5.4	2.6	60	72	**1MB10 ■ 2-1AB5 ■-■■■■**	22	0.0078
4	**4.55**	**112 M**	1435	26.5	83.1	84.3	84	0.83	8.4	2.5	6.1	2.9	57	70	**1MB10 ■ 2-1BB2 ■-■■■■**	27	0.010
5.5	**6.3**	**132 S**	1450	36	84.7	85.3	84.2	0.82	11.4	2.3	5.7	2.7	64	76	**1MB10 ■ 2-1CB0 ■-■■■■**	38	0.019
7.5	**8.6**	**132 M**	1450	49.5	86	86.5	85.4	0.82	15.4	2.6	6.6	3.1	64	76	**1MB10 ■ 2-1CB2 ■-■■■■**	44	0.024
11	**12.6**	**160 M**	1460	72	87.6	87.9	86.7	0.81	22.5	2.7	6.9	3.3	70	82	**1MB10 ■ 2-1DB2 ■-■■■■**	62	0.044
15	**17.3**	**160 L**	1460	98	88.7	89	87.8	0.82	30	3	7.5	3.6	70	82	**1MB10 ■ 2-1DB4 ■-■■■■**	73	0.056

Zones				
Zone 21 (conductive and non-conductive dust occasionally) Ex tb IIIC		**1**		
Zone 22 (non-conductive dust rarely or for a short period) Ex tc IIIB		**2**		
Zone 2 (explosive gases rarely or for a short period) Ex ec IIC		**3**		
Voltages		Version		Order code
50 Hz 230 VΔ/400 VY	60 Hz [1] 460 VY	**Standard**	**2 2**	–
50 Hz 400 VΔ/690 VY	60 Hz [1] 460 VΔ	**Standard**	**3 4**	–
50 Hz 500 VY		Without additional charge	**2 7**	–
50 Hz 500 VΔ		Without additional charge	**4 0**	–
For other voltages [1] and more information, see from page 6/70			**9 0**	**...**
Types of construction		Version		Order code
Without flange	IM B3 [2]	**Standard**	**A**	–
With flange	IM B5 [2]	With additional charge	**F**	–
With flange	IM B14 [2]	With additional charge	**K**	–
For other types of construction and more information, see from page 6/75			■	**...**
Motor protection		Version		
Without		**Standard**	**A**	
PTC thermistor with 3 temperature sensors		With additional charge	**B**	
For other motor protection and more information, see from page 6/88			■	
Terminal box position		Version		
Terminal box at top		**Standard**	**4**	
For other terminal box positions and more information, see from page 6/93			■	
Special versions				Order code(s)
For options, see from page 6/98			**1MB10 ■ 2-.... ■-■■■■ -Z**	...+...+...+...

For footnotes, see page 6/49

© Innomotics 2024

Selection and ordering data

P_{rated}, 50 Hz	P_{rated}, 60 Hz	Frame size	Operating values at rated power n_{rated}, 50 Hz	T_{rated}, 50 Hz	η_{rated}, 50 Hz, 4/4	η_{rated}, 50 Hz, 3/4	η_{rated}, 50 Hz, 2/4	$\cos\varphi$ rated, 50 Hz, 4/4	I_{rated}, 50 Hz, 400 V	T_{LR}/T_{rated}	I_{LR}/I_{rated}	T_B/T_{rated}	L_{pfA}, 50 Hz	L_{WA}, 50 Hz	Aluminum series 1MB10.2 Article No.	$m_{IM\ B3}$	J
kW	kW	FS	rpm	Nm	%	%	%		A				dB(A)	dB(A)		kg	kgm²
_ Cooling: self-ventilated (IC411)																	
_ Efficiency according to IEC 60034-30: IE1 Standard Efficiency																	
_ Insulation: Thermal class 155 (temperature class F), IP55 degree of protection, utilization in accordance with thermal class 130 (temperature class B)																	
6-pole: 1000 rpm at 50 Hz, 1200 rpm at 60 Hz [1]																	
1.5	**1.75**	**100 L**	940	15.2	75.2	75.6	72.3	0.74	3.9	2	4	2.2	59	71	**1MB10 ■ 2-1AC4 ■-■■■■**	19	0.0065
2.2	**2.55**	**112 M**	940	22.5	77.7	78.4	76.6	0.72	5.7	2.6	4.6	2.7	59	71	**1MB10 ■ 2-1BC2 ■-■■■■**	25	0.0092
3	**3.45**	**132 S**	955	30	79.7	79.9	77.1	0.74	7.3	2	4.6	2.6	63	75	**1MB10 ■ 2-1CC0 ■-■■■■**	34	0.017
4	**4.55**	**132 M**	955	40	81.4	82.5	81.9	0.76	9.3	2.3	5.2	2.6	65	78	**1MB10 ■ 2-1CC2 ■-■■■■**	39	0.021
5.5	**6.3**	**132 M**	955	55	83.1	84	82.8	0.75	12.7	2.7	5.7	3	70	77	**1MB10 ■ 2-1CC3 ■-■■■■**	48	0.027
7.5	**8.6**	**160 M**	970	74	84.7	84.8	83.2	0.73	17.5	2.1	5.5	2.9	67	79	**1MB10 ■ 2-1DC2 ■-■■■■**	72	0.056
11	**12.6**	**160 L**	965	109	86.4	86.8	85.9	0.77	24	1.9	5.9	2.7	67	79	**1MB10 ■ 2-1DC4 ■-■■■■**	92	0.078
8-pole: 750 rpm at 50 Hz, 900 rpm at 60 Hz [1]																	
0.75	**0.86**	**100 L**	705	10.2	61.2	58.1	50.5	0.62	2.85	1.9	3	2.2	60	72	**1MB10 ■ 2-1AD4 ■-■■■■**	17	0.0056
1.1	**1.27**	**100 L**	690	15.2	66.5	65.9	61.5	0.61	3.9	2	3.2	2.3	64	72	**1MB10 ■ 2-1AD5 ■-■■■■**	22	0.0078
1.5	**1.75**	**112 M**	700	20.5	70.2	71.2	69.4	0.66	4.65	1.9	3.5	2.1	67	78	**1MB10 ■ 2-1BD2 ■-■■■■**	29	0.0094
2.2	**2.55**	**132 S**	715	29.5	74.2	74.1	71.4	0.66	6.5	1.7	3.9	2.4	63	75	**1MB10 ■ 2-1CD0 ■-■■■■**	37	0.019
3	**3.45**	**132 M**	715	40	77	77.4	75.2	0.68	8.3	1.8	3.9	2.2	63	75	**1MB10 ■ 2-1CD2 ■-■■■■**	44	0.024
4	**4.55**	**160 M**	720	53	79.2	79.2	76.3	0.67	10.9	1.6	4.1	2.3	63	75	**1MB10 ■ 2-1DD2 ■-■■■■**	60	0.044
5.5	**6.3**	**160 M**	720	73	81.4	81.9	80.3	0.68	14.3	1.6	4	2.2	63	75	**1MB10 ■ 2-1DD3 ■-■■■■**	72	0.056
7.5	**8.6**	**160 L**	715	100	83.1	83.7	82.4	0.69	18.9	1.7	3.8	2.2	63	75	**1MB10 ■ 2-1DD4 ■-■■■■**	91	0.077

Zones		
Zone 21 (conductive and non-conductive dust occasionally) Ex tb IIIC		**1**
Zone 22 (non-conductive dust rarely or for a short period) Ex tc IIIB		**2**
Zone 2 (explosive gases rarely or for a short period) Ex ec IIC		**3**
Voltages	Version	Order code
50 Hz 230 VΔ/400 VY 60 Hz [1] 460 VY	**Standard**	**2 2** –
50 Hz 400 VΔ/690 VY 60 Hz [1] 460 VΔ	**Standard**	**3 4** –
50 Hz 500 VY	Without additional charge	**2 7** –
50 Hz 500 VΔ	Without additional charge	**4 0** –
For other voltages [1] and more information, see from page 6/70		**9 0** . . .
Types of construction	Version	Order code
Without flange IM B3 [2]	**Standard**	**A** –
With flange IM B5 [2]	With additional charge	**F** –
With flange IM B14 [2]	With additional charge	**K** –
For other types of construction and more information, see from page 6/75		■ . . .
Motor protection	Version	
Without	**Standard**	**A**
PTC thermistor with 3 temperature sensors	With additional charge	**B**
For other motor protection and more information, see from page 6/88		■
Terminal box position	Version	
Terminal box at top	**Standard**	**4**
For other terminal box positions and more information, see from page 6/93		■
Special versions		Order code(s)
For options, see from page 6/98	**1MB10 ■ 2-....**	**■-■■■■ -Z** . . .+. . .+. . .+. . .

6

1) Operating values at rated power for 60 Hz are stored in the SPC.
2) Types derived from IM B3 (IM B6/7/8, IM V6 and IM V5), from IM B5 (IM V3 and IM V1) and from IM B14 (IM V19 and IM V18) are possible, provided that no requirements exist for condensation drainage holes (**H03**) or stamping of the type on the rating plate. The basic type IM B3, IM B5 or IM B14 is stamped as standard on the rating plate. For orders with condensation drainage holes (**H03**), the type must be specified.
3) Parallel supply lines are required in the case of connection to ≤ 240 V. For frame size 315 with connection to ≤ 240 V, due to the high current, a drilled, removable entry plate (order code **R52**) or a larger terminal box (order code **R50**) can be used. Order codes **R52** and **R50** alter the motor dimensions.
4) No IE class for 50 and 60 Hz because the motor is outside the validity for the efficiency classes according to IEC 60034-30-1:2014.
5) Not possible for 8-pole motors.

© Innomotics 2024

Innomotics XP 1MB1, 1MB5 explosion-protected motors

IE3

Cast-iron series 1MB1543, 1MB1643, 1MB5543, 1MB5643 – self-ventilated

Selection and ordering data

P_{rated}, 50 Hz	Temperature class	Frame size	Operating values at rated power n_{rated}, 50 Hz	T_{rated}, 50 Hz	η_{rated}, 50 Hz, 4/4	η_{rated}, 50 Hz, 3/4	η_{rated}, 50 Hz, 2/4	cosφ rated, 50 Hz, 4/4	I_{rated}, 50 Hz, 400 V	T_{LR}/T_{rated}, 50 Hz	I_{LR}/I_{rated}, 50 Hz	T_B/T_{rated}, 50 Hz	t_E, 50Hz, T1/T2	t_E, 50Hz, T3	L_{pfA}, 50 Hz 1)	L_{WA}, 50 Hz 1)	Cast-iron series 1MB.543 – *Basic Line* 1MB.643 – *Performance Line* Article No.	$m_{IM\ B3}$	J
kW		FS	rpm	Nm	%	%	%		A						dB(A)	dB(A)		kg	kgm²
_ Cooling: self-ventilated (IC411)																			
_ Efficiency according to IEC 60034-30: IE3 Premium Efficiency																			
_ Insulation: Thermal class 155 (temperature class F), IP55 degree of protection, utilization in accordance with thermal class 120 (temperature class B)																			
2-pole: 3000 rpm at 50 Hz. temperature classes T1 to T3																			
0.37	**T1. T2. T3**	**71 M**	2775	1.27	73.8	74.4	72.4	0.83	0.91	2.7	5	2.7	42	37	63	70[2]	**1MB1 5 43-0CA2 ■-■■■■**	14	0.00044
0.55	**T1. T2. T3**	**71 M**	2845	1.85	77.8	77	73.8	0.76	1.33	3.9	6.7	3.8	25	22	63	70[2]	**1MB1 5 43-0CA3 ■-■■■■**	16	0.00056
0.75	**T1. T2. T3**	**80 M**	2840	2.5	80.7	81.7	80.8	0.86	1.7	2.6	5.7	2.8	22	19	64	71[2]	**1MB1 5 43-0DA2 ■-■■■■**	19	0.0011
1.1	**T1. T2. T3**	**80 M**	2845	3.7	82.7	83.7	82.7	0.85	2.4	3.1	6.7	3.2	22	14	65	73[2]	**1MB1 5 43-0DA3 ■-■■■■**	22	0.0013
1.3	**T1. T2. T3**	**90 S**	2900	4.3	83.5	84.2	83	0.89	2.7	2.7	7.4	3.4	9	8	68	75	**1MB1 5 43-0EA0 ■-■■■■**	27	0.0021
1.85	**T1. T2. T3**	**90 L**	2890	6.1	85.1	86	85.9	0.92	3.7	2.7	7.8	3.2	8	7	68	75	**1MB1 5 43-0EA4 ■-■■■■**	33	0.0031
2.5	**T1. T2. T3**	**100 L**	2895	8.2	86.4	87.5	86.9	0.92	2.85	2.7	7.7	3.3	10	9	68	75	**1MB1 ■ 43-1AA4 ■-■■■■**	37	0.0054
3.3	**T1. T2. T3**	**112 M**	2940	10.7	87.4	87.6	87.3	0.92	3.75	1.9	7.3	2.9	10	9	70	77	**1MB1 ■ 43-1BA2 ■-■■■■**	43	0.012
4.6	**T1. T2. T3**	**132 S**	2950	14.9	88.6	89.8	90.1	0.91	5	1.7	7.5	3.1	16	13	72	79	**1MB1 ■ 43-1CA0 ■-■■■■**	61	0.024
5.5	**T3**	**132 S**	2945	17.8	89.2	90.3	90.4	0.93	5.9	1.9	7.7	3	16	14	72	79	**1MB1 ■ 43-1CA1 ■-■■■■**	75	0.031
7.5	**T3**	**160 M**	2955	24	90.1	90.2	88.6	0.9	7.9	2.3	8.2	3.2	37	21	78	85[2]	**1MB1 ■ 43-1DA2 ■-■■■■**	102	0.053
10	**T3**	**160 M**	2955	32.5	90.9	91.1	90.6	0.91	10.4	2.3	8	3.1	29	15	78	85[2]	**1MB1 ■ 43-1DA3 ■-■■■■**	111	0.061
12.5	**T3**	**160 L**	2945	40.5	91.5	91.9	91.7	0.92	13	2.2	7.6	2.8	26	13	78	85[2]	**1MB1 ■ 43-1DA4 ■-■■■■**	123	0.068
15	**T3**	**180 M**	2955	48.5	91.9	92.3	91.2	0.9	15.8	2.6	8.3	3.6	21	8	74	81	**1MB1 ■ 43-1EA2 ■-■■■■**	165	0.0842
20	**T3**	**200 L**	2970	64	92.5	92.7	91.7	0.84	22	1.9	7	3.1	42	7[3]	76	83	**1MB1 ■ 43-2AA4 ■-■■■■**	220	0.12
24	**T3**	**200 L**	2970	77	92.9	93.1	92.8	0.86	25.5	2	7.1	3	39	11	75	82	**1MB1 ■ 43-2AA5 ■-■■■■**	245	0.15
28	**T3**	**225 M**	2960	90	93.2	93.7	93.5	0.9	30	2.4	5.9	2.6	30	11	76	90	**1MB1 ■ 43-2BA2 ■-■■■■**	330	0.266
36	**T3**	**250 M**	2975	116	93.7	93.8	93.1	0.91	37.5	2.4	6.2	2.7	35	17	75	88	**1MB1 ■ 43-2CA2 ■-■■■■**	420	0.466
47	**T3**	**280 S**	2975	151	94.1	94.2	93.5	0.9	48.5	2.7	6.4	2.6	21	9	75	89	**1MB1 ■ 43-2DA0 ■-■■■■**	530	0.826
58	**T3**	**280 M**	2975	186	94.4	94.5	94	0.91	60	2.6	6.5	2.6	20	8[3]	75	89	**1MB1 ■ 43-2DA2 ■-■■■■**	620	0.934
68	**T3**	**315 S**	2982	220	94.6	94.6	93.8	0.92	69	2.2	6.6	2.8	33	15	75	89	**1MB5 ■ 43-3AA0 ■-■■■■**	950	1.67
80	**T3**	**315 M**	2982	255	94.8	94.9	94.3	0.93	81	2.2	6.4	2.6	28	15	75	89	**1MB5 ■ 43-3AA2 ■-■■■■**	1020	1.95
100	**T3**	**315 L**	2982	320	95.1	95.1	94.6	0.93	100	2.4	6.7	2.7	23	10	75	89	**1MB5 ■ 43-3AA4 ■-■■■■**	1190	2.34
125	**T3**	**315 L**	2980	400	95.3	95.4	94.9	0.92	125	2.3	6.6	2.7	19	10	76	91	**1MB5 ■ 43-3AA5 ■-■■■■**	1220	2.34

Basic Line								**5**		
Performance Line								**6**		
Voltages			Version							Order code
50 Hz 230 VΔ/400 VY	60 Hz 460 VY		**Standard**				**2**	**2**		–
50 Hz 400 VΔ/690 VY	60 Hz 460 VΔ		**Standard**				**3**	**4**		–
50 Hz 500 VY			Without additional charge				**2**	**7**		–
50 Hz 500 VΔ			Without additional charge				**4**	**0**		–
For other voltages and more information, see from page 6/72							**9**	**0**		...
Types of construction			Version							Order code
Without flange	IM B3 [4]		**Standard**					**A**		–
With flange	IM B5 [4]		With additional charge					**F**		–
With flange	IM B14 [4]		With additional charge					**K**		–
For other types of construction and more information, see from page 6/81								■		...
Motor protection			Version							
Without			**Standard**						**A**	
PTC thermistor with 3 temperature sensors			With additional charge						**B**	
For other motor protection and more information, see from page 6/90									■	
Terminal box position			Version							
Terminal box at top			**Standard**							**4**
For other terminal box positions and more information, see from page 6/95										■
Special versions										Order code(s)
For options, see from page 6/107				**1MB ■■ 43-....**				**■-■■■■**		**-Z ...+...+...**

[1] Noise values for line operation under load, tolerance + 3dB(A).
[2] These sound power levels are above the set values in the VIK recommendation in the "standard" version. This difference must be agreed between the manufacturer and the operator.
[3] The tE time T3 of
– 1MB1543-1EB4 at 7s falls below the set value of 7.2s from the
– 1MB1543-2AB5 at 6s falls below the set value of 7.1s from the
VIK recommendation. These differences must be agreed between the manufacturer and the operator.
[4] Types derived from IM B3 (IM B6/7/8, IM V6 and IM V5), from IM B5 (IM V3 and IM V1) and from IM B14 (IM V19 and IM V18) are possible. The basic type IM B3, IM B5 or IM B14 is stamped as standard on the rating plate.

© Innomotics 2024

Selection and ordering data

P_{rated}, 50 Hz	Temperature class	Frame size	Operating values at rated power n_{rated}, 50 Hz	T_{rated}, 50 Hz	η_{rated}, 50 Hz, 4/4	η_{rated}, 50 Hz, 3/4	η_{rated}, 50 Hz, 2/4	$\cos\varphi$ rated, 50 Hz, 4/4	I_{rated}, 50 Hz, 400 V	T_{LR}/T_{rated}, 50 Hz	I_{LR}/I_{rated}, 50 Hz	T_B/T_{rated}, 50 Hz	t_E, 50Hz, T1/T2	t_E, 50Hz, T3	L_{pfA}, 50 Hz 1)	L_{WA}, 50 Hz 1)	Cast-iron series 1MB1543 – *Basic Line* 1MB1643 – *Performance Line* Article No.	$m_{IM\ B3}$	J
kW		FS	rpm	Nm	%	%	%		A						dB(A)	dB(A)		kg	kgm²
_ Cooling: self-ventilated (IC411)																			
_ Efficiency according to IEC 60034-30: IE3 Premium Efficiency																			
_ Insulation: Thermal class 155 (temperature class F), IP55 degree of protection, utilization in accordance with thermal class 120 (temperature class B)																			
2-pole: 3000 rpm at 50 Hz, temperature classes T1 and T2 with second rating plate (T1/T2 and T3)																			
5.5[2]	**T1. T2**	**132 S**	2925	21	87.6	88.8	90.1	0.93	7	1.6	6.5	2.5	16	14	72	79	**1MB1 ■ 43-1CA1 ■-■■■■**	75	0.031
9.5	**T1. T2**	**160 M**	2935	31	90.8	91.4	91.6	0.91	10.1	1.8	6.4	2.5	37	21	78	85	**1MB1 ■ 43-1DA2 ■-■■■■**	102	0.053
13[2]	**T1. T2**	**160 M**	2925	42.5	89.9	90.9	91.4	0.92	13.6	1.8	6.1	2.4	29	15	78	85	**1MB1 ■ 43-1DA3 ■-■■■■**	111	0.061
16[2]	**T1. T2**	**160 L**	2910	53	90.5	91.9	92.4	0.92	17	1.7	5.8	2.2	26	13	78	85	**1MB1 ■ 43-1DA4 ■-■■■■**	123	0.068
19	**T1. T2**	**180 M**	2935	62	92.4	93.1	92.9	0.91	20	2	6.6	2.8	21	8	74	81	**1MB1 ■ 43-1EA2 ■-■■■■**	165	0.0842
25	**T1. T2**	**200 L**	2955	81	93	93.7	94	0.86	27	1.5	5.7	2.5	42	7	76	83	**1MB1 ■ 43-2AA4 ■-■■■■**	220	0.12
31	**T1. T2**	**200 L**	2950	100	93.4	93.9	94.2	0.88	33	1.5	5.4	2.3	39	11	75	82	**1MB1 ■ 43-2AA5 ■-■■■■**	245	0.15

Basic Line									**5**			
Performance Line									**6**			
Voltages					Version							Order code
50 Hz 230 VΔ/400 VY	60 Hz 460 VY				**Standard**					**2**	**2**	–
50 Hz 400 VΔ/690 VY	60 Hz 460 VΔ				**Standard**					**3**	**4**	–
50 Hz 500 VY					Without additional charge					**2**	**7**	–
50 Hz 500 VΔ					Without additional charge					**4**	**0**	–
For other voltages and more information, see from page 6/72										**9**	**0**	**...**
Types of construction					Version							Order code
Without flange	IM B3 [4]				**Standard**						**A**	–
With flange	IM B5 [4]				With additional charge						**F**	–
With flange	IM B14 [4]				With additional charge						**K**	–
For other types of construction and more information, see from page 6/81											■	**...**
Motor protection					Version							
Without					**Standard**						**A**	
PTC thermistor with 3 temperature sensors					With additional charge						**B**	
For other motor protection and more information, see from page 6/90											■	
Terminal box position					Version							
Terminal box at top					**Standard**							**4**
For other terminal box positions and more information, see from page 6/95												■
Special versions												Order code(s)
For options, see from page 6/107									**1MB1 ■ 43-....**			**-Z ...+...+...**

1) Noise values for line operation under load, tolerance + 3dB(A).
2) Only complies with efficiency classification IE2.
3) These sound power levels are above the set values in the VIK recommendation in the "standard" version. This difference must be agreed between the manufacturer and the operator.
4) Types derived from IM B3 (IM B6/7/8, IM V6 and IM V5), from IM B5 (IM V3 and IM V1) and from IM B14 (IM V19 and IM V18) are possible. The basic type IM B3, IM B5 or IM B14 is stamped as standard on the rating plate.

© Innomotics 2024

Innomotics XP 1MB1, 1MB5 explosion-protected motors

IE3

Cast-iron series 1MB1543, 1MB1643, 1MB5543, 1MB5643 – self-ventilated

Selection and ordering data

P_{rated}, 50 Hz	Temperature class	Frame size	Operating values at rated power: n_{rated}, 50 Hz	T_{rated}, 50 Hz	η_{rated}, 50 Hz, 4/4	η_{rated}, 50 Hz, 3/4	η_{rated}, 50 Hz, 2/4	$\cos\varphi$ rated, 50 Hz, 4/4	I_{rated}, 50 Hz, 400 V	T_{LR}/T_{rated}, 50 Hz	I_{LR}/I_{rated}, 50 Hz	T_B/T_{rated}, 50 Hz	t_E, 50Hz, T1/T2	t_E, 50Hz, T3	L_{pfA}, 50 Hz 1)	L_{WA}, 50 Hz 1)	Cast-iron series 1MB.543 – *Basic Line* 1MB.543 – *Performance Line* Article No.	$m_{IM\ B3}$	J
kW		FS	rpm	Nm	%	%	%		A						dB(A)	dB(A)		kg	kgm²
_ Cooling: self-ventilated (IC411)																			
_ Efficiency according to IEC 60034-30: IE3 Premium Efficiency																			
_ Insulation: Thermal class 155 (temperature class F), IP55 degree of protection, utilization in accordance with thermal class 120 (temperature class B)																			
4-pole: 1500 rpm at 50 Hz. temperature classes T1 to T3																			
0.25	**T1. T2. T3**	**71 M**	1385	1.72	73.5	72.7	68.3	0.72	0.75	2.4	4.1	2.6	73	65	59	66[3]	**1MB1 5 43-0CB2 ■-■■■■**	14	0.00094
0.37	**T1. T2. T3**	**71 M**	1400	2.5	77.3	76.7	73	0.7	1.02	3.3	4.9	3.1	66	59	56	63[3]	**1MB1 5 43-0CB3 ■-■■■■**	17	0.00134
0.55	**T1. T2. T3**	**80 M**	1435	3.65	80.8	80.7	77.7	0.77	1.37	2.2	5.4	2.8	34	30	57	64[3]	**1MB1 5 43-0DB2 ■-■■■■**	19	0.0021
0.75	**T1. T2. T3**	**80 M**	1440	4.95	82.5	82.6	80.8	0.76	1.8	2.7	6.4	3.2	28	25	60	67[3]	**1MB1 5 43-0DB3 ■-■■■■**	23	0.0029
1	**T1. T2. T3**	**90 S**	1435	6.7	83.7	84.3	82.8	0.78	2.3	3	6.7	3.4	35	31	57	64[3]	**1MB1 5 43-0EB0 ■-■■■■**	25	0.0036
1.35	**T1. T2. T3**	**90 L**	1440	9	84.9	85.1	83.7	0.78	3.05	3	7	3.6	30	27	62	69[3]	**1MB1 5 43-0EB4 ■-■■■■**	32	0.0049
2	**T1. T2. T3**	**100 L**	1455	13.1	86.3	86.7	86	0.85	2.3	2.4	7.7	3.3	28	25	61	68	**1MB1 ■ 43-1AB4 ■-■■■■**	40	0.014
2.5	**T1. T2. T3**	**100 L**	1455	16.4	87.1	88.1	87.6	0.85	2.95	2.4	7.8	3.2	18	16	63	70[3]	**1MB1 ■ 43-1AB5 ■-■■■■**	40	0.014
3.6	**T1. T2. T3**	**112 M**	1460	23.5	88.3	88.8	88	0.83	4.2	2.2	8	3.4	14	13	59	66	**1MB1 ■ 43-1BB2 ■-■■■■**	43	0.017
5	**T1. T2. T3**	**132 S**	1470	32.5	89.3	90.1	89.8	0.84	5.7	2.1	7.5	3	27	23	62	69	**1MB1 ■ 43-1CB0 ■-■■■■**	67	0.034
6.8	**T1. T2. T3**	**132 M**	1470	44	90.2	90.7	90.4	0.84	7.7	2.2	7.7	3.1	26	23	66	73	**1MB1 ■ 43-1CB2 ■-■■■■**	82	0.046
10	**T1. T2. T3**	**160 M**	1475	65	91.2	91.6	90.9	0.84	11.3	1.7	6.6	2.8	28	21	66	73	**1MB1 ■ 43-1DB2 ■-■■■■**	110	0.071
13.5	**T1. T2. T3**	**160 L**	1475	87	91.9	92.1	91.4	0.84	15.3	2.7	7.4	3.1	23	11	66	73	**1MB1 ■ 43-1DB4 ■-■■■■**	129	0.085
15	**T3**	**180 M**	1475	97	92.1	92.5	92.5	0.82	17.3	2.4	7.6	3.4	22	8	67	74	**1MB1 ■ 43-1EB2 ■-■■■■**	166	0.13931
17.5	**T3**	**180 L**	1470	114	92.5	93	93	0.83	19.8	2.3	7.5	3.3	23	7[2]	69	76	**1MB1 ■ 43-1EB4 ■-■■■■**	178	0.15271
24	**T3**	**200 L**	1475	155	93.1	93.4	93	0.84	27	2.4	7.6	3.3	20	6[2]	65	72	**1MB1 ■ 43-2AB5 ■-■■■■**	240	0.22
30	**T3**	**225 S**	1485	193	93.6	93.7	93.1	0.84	33	3	7.3	3.1	32	13	66	79	**1MB1 ■ 43-2BB0 ■-■■■■**	300	0.417
36	**T3**	**225 M**	1482	230	93.9	94.3	94.2	0.85	39	3	7.1	2.9	31	11	66	79	**1MB1 ■ 43-2BB2 ■-■■■■**	370	0.545
44	**T3**	**250 M**	1486	285	94.2	94.5	94.2	0.86	46.5	3.1	7.6	3.1	37	18	69	83	**1MB1 ■ 43-2CB2 ■-■■■■**	480	0.975
58	**T3**	**280 S**	1488	370	94.6	94.8	94.3	0.87	61	2.8	7.2	3	45	20	68	82	**1MB1 ■ 43-2DB0 ■-■■■■**	680	1.7
70	**T3**	**280 M**	1490	450	94.9	95.1	94.9	0.86	75	3.1	7.6	2.9	29	13	69	83	**1MB1 ■ 43-2DB2 ■-■■■■**	670	1.61
84	**T3**	**315 S**	1492	540	95.1	95.1	94.6	0.85	90	2.2	7.1	2.8	22	9	69	84	**1MB5 ■ 43-3AB0 ■-■■■■**	900	2.38
100	**T3**	**315 M**	1491	640	95.3	95.4	94.9	0.86	107	2.2	7	2.7	33	16	70	85	**1MB5 ■ 43-3AB2 ■-■■■■**	980	2.88
115	**T3**	**315 L**	1492	740	95.5	95.5	95	0.85	125	2.5	7.1	3	35	15	72	86	**1MB5 ■ 43-3AB4 ■-■■■■**	1110	3.18
135	**T3**	**315 L**	1492	860	95.7	95.8	95.3	0.85	145	2.4	7.1	2.9	22	9	70	85	**1MB5 ■ 43-3AB5 ■-■■■■**	1190	3.67

Basic Line		**5**	
Performance Line		**6**	
Voltages	Version		Order code
50 Hz 230 VΔ/400 VY; 60 Hz 460 VY	**Standard**	**2 2**	–
50 Hz 400 VΔ/690 VY; 60 Hz 460 VΔ	**Standard**	**3 4**	–
50 Hz 500 VY	Without additional charge	**2 7**	–
50 Hz 500 VΔ	Without additional charge	**4 0**	–
For other voltages and more information, see from page 6/72		**9 0**	**...**
Types of construction	Version		Order code
Without flange; IM B3 [4]	**Standard**	**A**	–
With flange; IM B5 [4]	With additional charge	**F**	–
With flange; IM B14 [4]	With additional charge	**K**	–
For other types of construction and more information, see from page 6/81		■	**...**
Motor protection	Version		
Without	**Standard**	**A**	
PTC thermistor with 3 temperature sensors	With additional charge	**B**	
For other motor protection and more information, see from page 6/90		■	
Terminal box position	Version		
Terminal box at top	**Standard**	**4**	
For other terminal box positions and more information, see from page 6/95		■	
Special versions			Order code(s)
For options, see from page 6/107		**1MB. ■ 43-.... ■-■■■■**	**-Z ...+...+...**

[1] Noise values for line operation under load, tolerance + 3dB(A).

[2] The t_E time T3 of
– 1MB1543-1EB4 at 7s falls below the set value of 7.2s from the
– 1MB1543-2AB5 at 6s falls below the set value of 7.1s from the
VIK recommendation. These differences must be agreed between the manufacturer and the operator.

[3] These sound power levels are above the set values in the VIK recommendation in the "standard" version. This difference must be agreed between the manufacturer and the operator.

[4] Types derived from IM B3 (IM B6/7/8, IM V6 and IM V5), from IM B5 (IM V3 and IM V1) and from IM B14 (IM V19 and IM V18) are possible. The basic type IM B3, IM B5 or IM B14 is stamped as standard on the rating plate.

© Innomotics 2024

Selection and ordering data

P_{rated}, 50 Hz	Temperature class	Frame size	Operating values at rated power n_{rated}, 50 Hz	T_{rated}, 50 Hz	η_{rated}, 50 Hz, 4/4	η_{rated}, 50 Hz, 3/4	η_{rated}, 50 Hz, 2/4	$\cos\varphi$ rated, 50 Hz, 4/4	I_{rated}, 50 Hz, 400 V	T_{LR}/T_{rated}, 50 Hz	I_{LR}/I_{rated}, 50 Hz	T_B/T_{rated}, 50 Hz	t_E, 50Hz, T1/T2	t_E, 50Hz, T3	L_{pfA}, 50 Hz 1)	L_{WA}, 50 Hz 1)	Cast-iron series 1MB.543 – *Basic Line* 1MB.643 – *Perrformance Line* Article No.	$m_{IM\ B3}$	J
kW		FS	rpm	Nm	%	%	%		A						dB(A)	dB(A)		kg	kgm²
_ Cooling: self-ventilated (IC411)																			
_ Efficiency according to IEC 60034-30: IE3 Premium Efficiency																			
_ Insulation: Thermal class 155 (temperature class F), IP55 degree of protection, utilization in accordance with thermal class 120 (temperature class B)																			
4-pole: 1500 rpm at 50 Hz, temperature classes T1 and T2 with second rating plate (T1/T2 and T3)																			
17	**T1, T2**	**180 M**	1465	111	92.4	93.3	93.4	0.83	19.3	2.1	6.9	2.9	22	8	67	74	**1MB1 ■ 43-1EB2 ■-■■■■**	166	0.1393
20	**T1, T2**	**180 L**	1465	130	92.8	93.9	94.2	0.84	22.5	2	6.6	2.9	23	7	71	78	**1MB1 ■ 43-1EB4 ■-■■■■**	178	0.15271
27	**T1, T2**	**200 L**	1470	175	93.4	94	94.1	0.85	29.5	2.1	6.9	2.9	20	6	66	73	**1MB1 ■ 43-2AB5 ■-■■■■**	240	0.22
33	**T1, T2**	**225 S**	1482	215	93.6	93.9	93.5	0.85	36	2.7	6.7	2.8	32	13	65	79	**1MB1 ■ 43-2BB0 ■-■■■■**	300	0.417
40	**T1, T2**	**225 M**	1480	260	94.1	94.7	94.8	0.86	43.5	2.7	6.3	2.6	31	11	66	79	**1MB1 ■ 43-2BB2 ■-■■■■**	370	0.545
50	**T1, T2**	**250 M**	1485	320	94.4	94.9	94.9	0.87	53	2.7	6.7	2.7	37	18	70	84	**1MB1 ■ 43-2CB2 ■-■■■■**	480	0.975
68	**T1, T2**	**280 S**	1485	435	94.9	95.3	95.2	0.88	72	2.4	6.1	2.6	45	20	69	83	**1MB1 ■ 43-2DB0 ■-■■■■**	680	1.7
80	**T1. T2**	**280 M**	1490	510	95.1	95.6	95.6	0.87	85	2.7	6.7	2.5	29	13	69	83	**1MB1 ■ 43-2DB2 ■-■■■■**	670	1.61
100	**T1. T2**	**315 S**	1490	640	95.3	95.6	95.4	0.86	107	1.8	6	2.3	22	9	71	85	**1MB5 ■ 43-3AB0 ■-■■■■**	900	2.38
120	**T1. T2**	**315 M**	1488	770	95.5	95.8	95.7	0.86	128	1.8	5.8	2.2	33	16	76	91	**1MB5 ■ 43-3AB2 ■-■■■■**	980	2.88
135	**T1. T2**	**315 L**	1490	870	95.7	96	95.8	0.86	145	2.1	6.1	2.5	35	15	74	89	**1MB5 ■ 43-3AB4 ■-■■■■**	1110	3.18
165	**T1. T2**	**315 L**	1488	1060	95.8	96.1	96	0.86	177	2	5.8	2.3	22	9	72	87	**1MB5 ■ 43-3AB5 ■-■■■■**	1190	3.67

Basic Line		**5**	
Performance Line		**6**	
Voltages	Version		Order code
50 Hz 230 VΔ/400 VY 60 Hz 460 VY	**Standard**	**2 2**	–
50 Hz 400 VΔ/690 VY 60 Hz 460 VΔ	**Standard**	**3 4**	–
50 Hz 500 VY	Without additional charge	**2 7**	–
50 Hz 500 VΔ	Without additional charge	**4 0**	–
For other voltages and more information, see from page 6/72		**9 0**	**...**
Types of construction	Version		Order code
Without flange IM B3 2)	**Standard**	**A**	–
With flange IM B5 2)	With additional charge	**F**	–
With flange IM B14 2)	With additional charge	**K**	–
For other types of construction and more information, see from page 6/81		■	**...**
Motor protection	Version		
Without	**Standard**	**A**	
PTC thermistor with 3 temperature sensors	With additional charge	**B**	
For other motor protection and more information, see from page 6/90		■	
Terminal box position	Version		
Terminal box at top	**Standard**	**4**	
For other terminal box positions and more information, see from page 6/95		■	
Special versions			Order code(s)
For options, see from page 6/107		**1MB. ■ 43-.... ■-■■■■**	**-Z ...+...+...**

6

1) Noise values for line operation under load, tolerance + 3dB(A).

2) Types derived from IM B3 (IM B6/7/8, IM V6 and IM V5), from IM B5 (IM V3 and IM V1) and from IM B14 (IM V19 and IM V18) are possible. The basic type IM B3, IM B5 or IM B14 is stamped as standard on the rating plate.

© Innomotics 2024

Innomotics XP 1MB1, 1MB5 explosion-protected motors

IE3

Cast-iron series 1MB1543, 1MB1643, 1MB5543, 1MB5643 – self-ventilated

Selection and ordering data

P_{rated}, 50 Hz	Temperature class	Frame size	Operating values at rated power: η_{rated}, 50 Hz	T_{rated}, 50 Hz	η_{rated}, 50 Hz, 4/4	η_{rated}, 50 Hz, 3/4	η_{rated}, 50 Hz, 2/4	$\cos\varphi$ rated, 50 Hz, 4/4	I_{rated}, 50 Hz, 400 V	T_{LR}/T_{rated}, 50 Hz	I_{LR}/I_{rated}, 50 Hz	T_B/T_{rated}, 50 Hz	t_E, 50Hz, T1/T2	t_E, 50Hz, T3	L_{pfA}, 50 Hz 1)	L_{WA}, 50 Hz 1)	Cast-iron series 1MB.543 – *Basic Line* 1MB.643 – *Performance Line* Article No.	$m_{IM\,B3}$	J
kW		FS	rpm	Nm	%	%	%		A						dB(A)	dB(A)		kg	kgm²
_ Cooling: self-ventilated (IC411)																			
_ Efficiency according to IEC 60034-30: IE3 Premium Efficiency																			
_ Insulation: Thermal class 155 (temperature class F), IP55 degree of protection, utilization in accordance with thermal class 120 (temperature class B)																			
6-pole: 1000 rpm at 50 Hz, temperature classes T1 to T3																			
0.25	**T1. T2. T3**	**71 M**	875	2.75	68.6	69.8	67.9	0.72	0.72	2.4	3.4	2.4	500	233	58	65[2]	**1MB1 5 43-0CC3 ■-■■■■**	17	0.0014
0.37	**T1. T2. T3**	**80 M**	935	3.8	73.5	72.6	68	0.64	1.16	2.3	4.2	2.7	73	65	55	62[2]	**1MB1 5 43-0DC2 ■-■■■■**	20	0.0025
0.55	**T1. T2. T3**	**80 M**	925	5.7	77.2	77.1	74.3	0.65	1.65	2.6	4.4	2.9	94	82	60	67[2]	**1MB1 5 43-0DC3 ■-■■■■**	23	0.0031
0.65	**T1. T2. T3**	**90 S**	940	6.6	78.3	79.3	77.8	0.7	1.8	1.8	4.2	2.4	87	77	61	68[2]	**1MB1 5 43-0EC0 ■-■■■■**	27	0.004
0.95	**T1. T2. T3**	**90 L**	935	9.7	80.2	81.3	79.9	0.71	2.5	2.2	4.7	2.5	64	56	60	67[2]	**1MB1 5 43-0EC4 ■-■■■■**	32	0.0048
1.3	**T1. T2. T3**	**100 L**	965	12.9	81.8	82.8	81.6	0.74	1.88	1.9	5.1	2.4	41	36	62	65	**1MB1 ■ 43-1AC4 ■-■■■■**	36	0.011
1.9	**T1. T2. T3**	**112 M**	965	18.8	83.6	84.7	84.9	0.77	2.55	1.7	5.1	2.3	52	46	61	67	**1MB1 ■ 43-1BC2 ■-■■■■**	46	0.017
2.6	**T1. T2. T3**	**132 S**	980	25.5	85	85.8	85.3	0.75	3.35	2.1	6.5	2.8	54	48	63	70	**1MB1 ■ 43-1CC0 ■-■■■■**	70	0.029
3.5	**T1. T2. T3**	**132 M**	975	34.5	86.3	87.4	87.3	0.76	4.5	1.8	5.8	2.5	31	27	68	75	**1MB1 ■ 43-1CC2 ■-■■■■**	70	0.037
4.8	**T1. T2. T3**	**132 M**	975	47	87.5	88.4	88.3	0.76	6.1	2.1	6.2	2.7	34	30	69	76	**1MB1 ■ 43-1CC3 ■-■■■■**	82	0.046
6.6	**T1. T2. T3**	**160 M**	980	64	88.6	88.7	87.8	0.8	8	2.4	6.8	2.8	37	33	67	74	**1MB1 ■ 43-1DC2 ■-■■■■**	122	0.098
9.7	**T1. T2. T3**	**160 L**	980	95	89.9	90	89	0.79	11.8	2.7	7.1	2.9	22	19	70	77	**1MB1 ■ 43-1DC4 ■-■■■■**	147	0.12
13.2	**T1. T2. T3**	**180 L**	975	129	90.8	91.4	91.6	0.77	16.2	2.1	6.2	2.8	38	17	66	73	**1MB1 ■ 43-1EC4 ■-■■■■**	180	0.2043
16.5	**T1. T2. T3**	**200 L**	975	162	91.4	92.3	92.5	0.8	19.9	2	5.4	2.3	52	12	60	67	**1MB1 ■ 43-2AC4 ■-■■■■**	213	0.28
20	**T1. T2. T3**	**200 L**	980	195	91.9	92.1	91.3	0.75	25	1.7	6.5	3	40	16	69	76	**1MB1 ■ 43-2AC5 ■-■■■■**	266	0.33
27	**T1. T2. T3**	**225 M**	985	260	92.7	93.2	93.1	0.82	30	2.8	6.9	3.1	61	24	64	77	**1MB1 ■ 43-2BC2 ■-■■■■**	420	0.845
33	**T1. T2. T3**	**250 M**	985	320	93.1	93.9	94	0.85	36.5	2.4	6.3	2.6	61	22	65	78	**1MB1 ■ 43-2CC2 ■-■■■■**	480	1.27
40	**T1. T2. T3**	**280 S**	988	385	93.5	94.1	94	0.86	43.5	2.8	6.3	2.5	47	13	66	80	**1MB1 ■ 43-2DC0 ■-■■■■**	570	1.64
46	**T3**	**280 M**	990	445	93.8	94.2	94.1	0.84	50	3.4	7.5	3	28	13	63	77	**1MB1 ■ 43-2DC2 ■-■■■■**	570	1.64
64	**T3**	**315 S**	992	620	94.4	94.6	94.1	0.86	68	2.4	7.5	3.3	32	15	65	79	**1MB5 ■ 43-3AC0 ■-■■■■**	870	3.25
76	**T3**	**315 M**	992	730	94.6	94.9	94.6	0.87	81	2.3	7.4	3.2	28	11	65	79	**1MB5 ■ 43-3AC2 ■-■■■■**	900	3.54
92	**T3**	**315 L**	991	890	94.9	95.2	95.1	0.88	97	2.3	6.9	3	37	13	69	83	**1MB5 ■ 43-3AC4 ■-■■■■**	1090	4.52
110	**T3**	**315 L**	992	1060	95.1	95.3	95.1	0.87	115	2.5	7.6	3.3	26	9	71	86	**1MB5 ■ 43-3AC5 ■-■■■■**	1170	5.16
125	**T3**	**315 L**	992	1200	95.3	95.5	95.1	0.85	133	2.4	6.7	2.7	28	9	70	84	**1MB5 ■ 43-3AC6 ■-■■■■**	1180	4.89

Basic Line			**5**	
Performance Line			**6**	
Voltages		Version		Order code
50 Hz 230 VΔ/400 VY	60 Hz 460 VY	**Standard**	**2 2**	–
50 Hz 400 VΔ/690 VY	60 Hz 460 VΔ	**Standard**	**3 4**	–
50 Hz 500 VY		Without additional charge	**2 7**	–
50 Hz 500 VΔ		Without additional charge	**4 0**	–
For other voltages and more information, see from page 6/72			**9 0**	...
Types of construction		Version		Order code
Without flange	IM B3 [3]	**Standard**	**A**	–
With flange	IM B5 [3]	With additional charge	**F**	–
With flange	IM B14 [3]	With additional charge	**K**	–
For other types of construction and more information, see from page 6/81			■	...
Motor protection		Version		
Without		**Standard**	**A**	
PTC thermistor with 3 temperature sensors		With additional charge	**B**	
For other motor protection and more information, see from page 6/90			■	
Terminal box position		Version		
Terminal box at top		**Standard**	**4**	
For other terminal box positions and more information, see from page 6/95			■	
Special versions				Order code(s)
For options, see from page 6/107			**1MB. ■ 43-.... ■-■■■■**	**-Z ...+...+...**

1) Noise values for line operation under load, tolerance + 3dB(A).
2) These sound power levels are above the set values in the VIK recommendation in the "standard" version. This difference must be agreed between the manufacturer and the operator.
3) Types derived from IM B3 (IM B6/7/8, IM V6 and IM V5), from IM B5 (IM V3 and IM V1) and from IM B14 (IM V19 and IM V18) are possible. The basic type IM B3, IM B5 or IM B14 is stamped as standard on the rating plate.

© Innomotics 2024

Selection and ordering data

P_{rated}, 50 Hz	Temperature class	Frame size	Operating values at rated power: n_{rated}, 50 Hz	T_{rated}, 50 Hz	η_{rated}, 50 Hz, 4/4	η_{rated}, 50 Hz, 3/4	η_{rated}, 50 Hz, 2/4	$\cos\varphi_{rated}$, 50 Hz, 4/4	I_{rated}, 50 Hz, 400 V	T_{LR}/T_{rated}, 50 Hz	I_{LR}/I_{rated}, 50 Hz	T_B/T_{rated}, 50 Hz	t_E, 50Hz, T1/T2	t_E, 50Hz, T3	L_{pfA}, 50 Hz 1)	L_{WA}, 50 Hz 1)	Cast-iron series 1MB.543 – *Basic Line* 1MB.563 – *Performance Line* Article No.	$m_{IM\ B3}$	J
kW		FS	rpm	Nm	%	%	%		A						dB(A)	dB(A)		kg	kgm²
_ Cooling: self-ventilated (IC411)																			
_ Efficiency according to IEC 60034-30: IE3 Premium Efficiency																			
_ Insulation: Thermal class 155 (temperature class F), IP55 degree of protection, utilization in accordance with thermal class 120 (temperature class B)																			
6-pole: 1000 rpm at 50 Hz, temperature classes T1 and T2 with second rating plate (T1/T2 and T3)																			
50	**T1. T2**	**280 M**	988	485	93.9	94.5	94.5	0.85	54	3.1	6.9	2.8	28	13	63	77	**1MB1 ■ 43-2DC2 ■-■■■■**	570	1.64
64	**T1. T2**	**315 S**	991	660	94.5	94.7	94.4	0.87	72	2.3	7	3.1	32	15	66	80	**1MB5 ■ 43-3AC0 ■-■■■■**	870	3.25
76	**T1. T2**	**315 M**	991	790	94.7	95.1	94.9	0.88	86	2.2	6.9	3	28	11	65	79	**1MB5 ■ 43-3AC2 ■-■■■■**	900	3.54
92	**T1. T2**	**315 L**	990	950	95	95.4	95.4	0.88	104	2.2	6.5	2.8	37	13	69	84	**1MB5 ■ 43-3AC4 ■-■■■■**	1090	4.52
110	**T1. T2**	**315 L**	991	1160	95.2	95.6	95.5	0.88	126	2.3	6.9	3.1	26	9	71	86	**1MB5 ■ 43-3AC5 ■-■■■■**	1170	5.16
125	**T1. T2**	**315 L**	991	1300	95.4	95.7	95.5	0.85	145	2.2	6.2	2.5	28	9	70	85	**1MB5 ■ 43-3AC6 ■-■■■■**	1180	4.89

Basic Line		**5**	
Performance Line		**6**	
Voltages	Version		Order code
50 Hz 230 VΔ/400 VY	60 Hz 460 VY	**Standard**	**2 2** –
50 Hz 400 VΔ/690 VY	60 Hz 460 VΔ	**Standard**	**3 4** –
50 Hz 500 VY		Without additional charge	**2 7** –
50 Hz 500 VΔ		Without additional charge	**4 0** –
For other voltages and more information, see from page 6/72			**9 0** **...**
Types of construction	Version		Order code
Without flange	IM B3 2)	**Standard**	**A** –
With flange	IM B5 2)	With additional charge	**F** –
With flange	IM B14 2)	With additional charge	**K** –
For other types of construction and more information, see from page 6/81			■ **...**
Motor protection	Version		
Without		**Standard**	**A**
PTC thermistor with 3 temperature sensors		With additional charge	**B**
For other motor protection and more information, see from page 6/90			■
Terminal box position	Version		
Terminal box at top		**Standard**	**4**
For other terminal box positions and more information, see from page 6/95			■
Special versions			Order code(s)
For options, see from page 6/107			**1MB. ■ 43-.... ■ · ■■■■ -Z ...+...+...**

6

1) Noise values for line operation under load, tolerance + 3dB(A).

2) Types derived from IM B3 (IM B6/7/8, IM V6 and IM V5), from IM B5 (IM V3 and IM V1) and from IM B14 (IM V19 and IM V18) are possible. The basic type IM B3, IM B5 or IM B14 is stamped as standard on the rating plate.

© Innomotics 2024

Innomotics XP 1MB1, 1MB5 explosion-protected motors

Cast-iron series 1MB553/1MB.563 – self-ventilated

Selection and ordering data

P_{rated}, 50 Hz	P_{rated}, 60 Hz	Frame size	Operating values at rated power n_{rated}, 50 Hz	T_{rated}, 50 Hz	η_{rated}, 50 Hz, 4/4	η_{rated}, 50 Hz, 3/4	η_{rated}, 50 Hz, 2/4	$\cos\varphi$ rated, 50 Hz, 4/4	I_{rated}, 50 Hz, 400 V	T_{LR}/T_{rated}	I_{LR}/I_{rated}	T_B/T_{rated}	L_{pfA}, 50 Hz[1]	L_{WA}, 50 Hz[1]	Cast-iron series 1MB15■3/1MB55■3 Article-No.	$m_{IM\ B3}$	J
kW	kW	FS	rpm	Nm	%	%	%		A				dB(A)	dB(A)		kg	kgm²
_ Cooling: self-ventilated (IC411)																	
_ Efficiency according to IEC 60034-30: IE3 Premium Efficiency																	
_ Insulation: Thermal class 155 (temperature class F), IP55 degree of protection, utilization in accordance with thermal class 130 (temperature class B)																	
2-pole: 3000 rpm at 50 Hz, 3600 rpm at 60 Hz																	
0,37	0.37	71 M	2850	1.24	73.8	73.3	69.7	0.76	0.95	3.5	5.8	3.5	52	63	1MB15 ■ 3-0CA2 ■-■■■■	24	0.00043
0,55	0.55	71 M	2850	1.84	77.8	77.5	74.5	0.76	1.34	3.7	6.1	3.7	57	68	1MB15 ■ 3-0CA3 ■-■■■■	25	0.00053
0,75	0.75	80 M	2850	2.5	80.7	82.2	81.9	0.86	1.56	2.6	6.2	3	60	71	1MB15 ■ 3-0DA2 ■-■■■■	30	0.00108
1,1	1.1	80 M	2885	3.65	82.7	83.9	83.1	0.85	2.25	3	7.1	3.3	60	71	1MB15 ■ 3-0DA3 ■-■■■■	32	0.00138
1,5	1.5	90 L	2910	4.9	84.2	84.6	83.2	0.86	3	2.7	8.1	4.2	65	77	1MB15 ■ 3-0EA0 ■-■■■■	41	0.0024
2,2	2.2	90 L	2910	7.2	85.9	86.8	86.1	0.88	4.2	2.6	8.3	4	65	77	1MB15 ■ 3-0EA4 ■-■■■■	45	0.0032
3	3	100 L	2920	9.8	87.1	87.9	87.5	0.88	5.6	3.2	8.1	4.2	74	82	1MB15 ■ 3-1AA4 ■-■■■■	64	0.0048
4	4	112 M	2950	12.9	88.1	88.7	88.2	0.89	7.4	2.5	8.7	4	69	81	1MB15 ■ 3-1BA2 ■-■■■■	74	0.0099
5,5	5.5	132 S	2950	17.8	89.2	90.1	89.7	0.9	9.9	1.9	7.3	3.7	68	80	1MB15 ■ 3-1CA0 ■-■■■■	95	0.0201
7,5	7.5	132 S	2950	24.5	90.1	90.9	90.7	0.92	13.1	2.1	8.3	4	68	80	1MB15 ■ 3-1CA1 ■-■■■■	106	0.0272
11	11	160 M	2955	35.5	91.2	91.3	90.2	0.87	20	2.5	7.6	3.8	70	82	1MB15 ■ 3-1DA2 ■-■■■■	169	0.0457
15	15	160 M	2960	48.5	91.9	91.9	91	0.87	27	2.8	8.8	4.3	70	82	1MB15 ■ 3-1DA3 ■-■■■■	179	0.0532
18,5	18.5	160 L	2955	60	92.4	92.8	92.3	0.9	32	2.8	8.3	3.9	70	82	1MB15 ■ 3-1DA4 ■-■■■■	190	0.0637
22	22	180 M	2950	71	92.7	93	92.4	0.89	38.5	2.3	7.5	3.5	67	80	1MB15 ■ 3-1EA2 ■-■■■■	238	0.0889
30	30	200 L	2955	97	93.3	93.6	93.3	0.87	53	2.5	7	3.3	67	80	1MB15 ■ 3-2AA4 ■-■■■■	315	0.15
37	37	200 L	2955	120	93.7	93.9	93.5	0.88	65	2.5	7.1	3.2	67	80	1MB15 ■ 3-2AA5 ■-■■■■	348	0.178
45	45	225 M	2960	145	94	94.4	94	0.89	78	2.5	7	3	73	87	1MB15 ■ 3-2BA2 ■-■■■■	447	0.263
55	55	250 M	2975	177	94.3	94.5	94.1	0.89	95	2.4	7	3	75	89	1MB15 ■ 3-2CA2 ■-■■■■	532	0.454
75	75	280 S	2975	240	94.7	94.8	94.3	0.89	128	2.5	7.3	3	76	90	1MB15 ■ 3-2DA0 ■-■■■■	729	0.816
90	90	280 M	2975	290	95	95.2	94.8	0.9	152	2.5	7.5	3.1	79	93	1MB15 ■ 3-2DA2 ■-■■■■	763	0.924
110	110	315 S	2982	350	95.2	95.3	94.7	0.91	N/A	2.5	7.6	3	77	92	1MB55 ■ 3-3AA0 ■-■■■■	1130	1.76
132	132	315 M	2982	425	95.4	95.3	94.7	0.91	N/A	2.3	7.4	2.9	77	92	1MB55 ■ 3-3AA2 ■-■■■■	1290	1.99
160	160	315 L	2980	510	95.6	95.6	95.2	0.91	N/A	2.3	6.9	2.8	78	92	1MB55 ■ 3-3AA4 ■-■■■■	1360	2.29
200	200	315 L	2980	640	95.8	95.9	95.5	0.92	N/A	2.4	6.7	2.6	78	93	1MB55 ■ 3-3AA5 ■-■■■■	1490	2.65
250	250	315 L	2980	800	95.8	95.9	95.5	0.91	N/A	2.6	7.5	3	79	94	1MB55 ■ 3-3AA6 ■-■■■■	1590	2.85
315	315	355 L	2986	1010	95.8	95.8	95.3	0.91	N/A	2.1	7.8	3	79	95	1MB55 ■ 3-3BA2 ■-■■■■	1830	4.31
355	355	355 L	2975	1140	95.8	96.1	96	0.92	N/A	2.4	6.6	2.5	83	98	1MB55 ■ 3-3BA3 ■-■■■■	2620	5.84
400	400	355 L	2986	1280	95.8	95.8	95.5	0.92	N/A	2.2	7.6	3	81	96	1MB55 ■ 3-3BA4 ■-■■■■	2610	5.89
460	460	355 L	2990	1470	95.8	95.7	95	0.89	N/A	2.8	9.5	4.2	81	96	1MB55 ■ 3-3BA5 ■-■■■■	2620	5.89

Zones									Order code
Zone 1 (explosive gases occasionally or frequently) Ex db IIC							5		–
Zone 1 (explosive gases occasionally or frequently) Ex db IIB							6		–
Voltages			Version						Order code
50 Hz 230 VΔ/400 VY	60 Hz 460 VY		**Standard**			2	2		–
50 Hz 400 VΔ/690 VY	60 Hz 460 VΔ		**Standard**			3	4		–
50 Hz 500 VY			Without additional charge			2	7		–
50 Hz 500 VΔ			Without additional charge			4	0		–
For other voltages and more information, see from page 6/73						9	0		...
Types of construction			Version						Order code
Without flange	IM B3 [2]		**Standard**				A		–
With flange	IM B5 [2]		With additional charge				F		–
With flange	IM B14 [2]		With additional charge				K		–
For other types of construction and more information, see from page 6/84							■		...
Motor protection			Version						
Without			**Standard**					A	
PTC thermistor with 3 temperature sensors			With additional charge					B	
For other motor protection and more information, see from page 6/91								■	
Terminal box position			Version						
Terminal box at top			**Standard**						4
For other terminal box positions and more information, see from page 6/96									■
Special versions									Order code(s)
For options, see from page 6/111				1MB.5 ■ 3-	■	■■■■	-Z		...+...+...+...

For footnotes, see page 6/59

© Innomotics 2024

Selection and ordering data

P_{rated}, 50 Hz	P_{rated}, 60 Hz	Frame size	Operating values at rated power n_{rated}, 50 Hz	T_{rated}, 50 Hz	η_{rated}, 50 Hz, 4/4	η_{rated}, 50 Hz, 3/4	η_{rated}, 50 Hz, 2/4	$\cos\varphi$ rated, 50 Hz, 4/4	I_{rated}, 50 Hz, 400 V	T_{LR}/T_{rated}	I_{LR}/I_{rated}	T_B/T_{rated}	L_{pfA}, 50 Hz[1)]	L_{WA}, 50 Hz[1)]	Cast-iron series 1MB15■3/1MB55■3 Article-No.	$m_{IM\ B3}$	J
kW	kW	FS	rpm	Nm	%	%	%		A				dB(A)	dB(A)		kg	kgm²
_ Cooling: self-ventilated (IC411)																	
_ Efficiency according to IEC 60034-30: IE3 Premium Efficiency																	
_ Insulation: Thermal class 155 (temperature class F), IP55 degree of protection, utilization in accordance with thermal class 130 (temperature class B)																	
4-pole: 1500 rpm at 50 Hz, 1800 rpm at 60 Hz																	
0.25	**0.25**	**71 M**	1395	1.71	73.5	73.7	70.4	0.72	0.68	2.5	4.2	2.6	44	55	**1MB15 ■ 3-0CB2 ■-■■■■**	25	0.00103
0.37	**0.37**	**71 M**	1410	2.5	77.3	76.8	73.2	0.7	0.99	3.1	4.8	3.1	56	67	**1MB15 ■ 3-0CB3 ■-■■■■**	27	0.00133
0.55	**0.55**	**80 M**	1440	3.65	80.8	81.1	79.3	0.78	1.26	2.1	5.9	3.1	53	64	**1MB15 ■ 3-0DB2 ■-■■■■**	30	0.00218
0.75	**0.75**	**80 M**	1450	4.95	82.5	82.3	79.9	0.75	1.75	2.7	7.1	3.9	53	64	**1MB15 ■ 3-0DB3 ■-■■■■**	33	0.00298
1.1	**1.1**	**90 L**	1440	7.3	84.1	84.7	83.4	0.78	2.4	2.9	6.9	3.6	56	68	**1MB15 ■ 3-0EB0 ■-■■■■**	42	0.0038
1.5	**1.5**	**90 L**	1445	9.9	85.3	86	85.2	0.8	3.15	2.9	7.3	3.5	60	68	**1MB15 ■ 3-0EB4 ■-■■■■**	45	0.005
2.2	**2.2**	**100 L**	1465	14.3	86.7	87	85.9	0.83	4.4	3.2	8.4	4.4	60	72	**1MB15 ■ 3-1AB4 ■-■■■■**	68	0.0124
3	**3**	**100 L**	1460	19.6	87.7	88.5	87.9	0.83	5.9	2.5	8.3	3.9	60	72	**1MB15 ■ 3-1AB5 ■-■■■■**	68	0.0124
4	**4**	**112 M**	1460	26	88.6	89.2	88.6	0.82	7.9	2.4	7.1	3.7	58	70	**1MB15 ■ 3-1BB2 ■-■■■■**	76	0.0146
5.5	**5.5**	**132 S**	1470	35.5	89.6	90	89.4	0.82	10.8	2.9	8.5	3.7	64	76	**1MB15 ■ 3-1CB0 ■-■■■■**	105	0.0352
7.5	**7.5**	**132 M**	1465	49	90.4	91.1	90.8	0.84	14.3	2.6	8.2	3.7	64	76	**1MB15 ■ 3-1CB2 ■-■■■■**	120	0.0404
11	**11**	**160 M**	1475	71	91.4	91.8	91.2	0.84	20.5	2.6	7.6	3.4	65	77	**1MB15 ■ 3-1DB2 ■-■■■■**	168	0.0733
15	**15**	**160 L**	1475	97	92.1	92.3	91.5	0.82	28.5	2.5	8.5	3.8	65	77	**1MB15 ■ 3-1DB4 ■-■■■■**	191	0.0877
18.5	**18.5**	**180 M**	1470	120	92.6	93.1	93	0.82	35	2.5	7.2	3.3	66	73	**1MB15 ■ 3-1EB2 ■-■■■■**	240	0.1445
22	**22**	**180 L**	1470	143	93	93.6	93.6	0.83	41	2.3	6.8	3.3	68	75	**1MB15 ■ 3-1EB4 ■-■■■■**	249	0.1582
30	**30**	**200 L**	1470	195	93.6	94.2	94.2	0.84	55	2.6	7.3	3.1	65	72	**1MB15 ■ 3-2AB5 ■-■■■■**	346	0.248
37	**37**	**225 S**	1480	240	93.9	94.3	93.9	0.86	66	2.6	6.5	2.6	65	79	**1MB15 ■ 3-2BB0 ■-■■■■**	449	0.469
45	**45**	**225 M**	1480	290	94.2	94.7	94.6	0.86	80	2.6	6.4	2.7	64	78	**1MB15 ■ 3-2BB2 ■-■■■■**	466	0.521
55	**55**	**250 M**	1482	355	94.6	95	94.8	0.86	98	2.5	6.8	2.9	67	81	**1MB15 ■ 3-2CB2 ■-■■■■**	563	0.842
75	**75**	**280 S**	1486	480	95	95.3	95.1	0.86	133	2.6	7.3	3	69	84	**1MB15 ■ 3-2DB0 ■-■■■■**	782	1.37
90	**90**	**280 M**	1486	580	95.2	95.5	95.4	0.87	157	2.7	7.5	3	73	87	**1MB15 ■ 3-2DB2 ■-■■■■**	818	1.7
110	**110**	**315 S**	1490	700	95.4	95.6	95.3	0.86	N/A	2.4	6.7	2.5	69	84	**1MB55 ■ 3-3AB0 ■-■■■■**	1150	2.48
132	**132**	**315 M**	1490	850	95.6	95.9	95.7	0.86	N/A	2.1	6.9	2.5	72	88	**1MB55 ■ 3-3AB2 ■-■■■■**	1270	2.79
160	**160**	**315 L**	1490	1030	95.8	95.9	95.6	0.85	N/A	2.4	7.5	3	80	94	**1MB55 ■ 3-3AB4 ■-■■■■**	1330	3.17
200	**200**	**315 L**	1490	1280	96	96.3	96.2	0.86	N/A	2.3	7.6	2.9	76	91	**1MB55 ■ 3-3AB5 ■-■■■■**	1480	3.79
250	**250**	**315 L**	1488	1600	96	96.2	95.9	0.86	N/A	2.2	7	2.7	78	93	**1MB55 ■ 3-3AB6 ■-■■■■**	1660	4.57
315	**315**	**355 L**	1492	2000	96	96	95.5	0.86	N/A	2.3	7.9	3.4	75	91	**1MB55 ■ 3-3BB2 ■-■■■■**	2140	5.6
355	**355**	**355 L**	1491	2250	96	96.2	95.9	0.85	N/A	2.2	7.5	2.9	78	94	**1MB55 ■ 3-3BB3 ■-■■■■**	2240	6.3
400	**400**	**355 L**	1491	2550	96	96.1	95.8	0.87	N/A	2.1	7.3	3	79	94	**1MB55 ■ 3-3BB4 ■-■■■■**	2420	7.02
460	**460**	**355 L**	1492	2950	96	96.1	95.7	0.83	N/A	3.4	8	3.1	79	95	**1MB55 ■ 3-3BB5 ■-■■■■**	2720	8.48

Zones			Order code
Zone 1 (explosive gases occasionally or frequently) Ex db IIC		**5**	–
Zone 1 (explosive gases occasionally or frequently) Ex db IIB		**6**	–
Voltages	Version		Order code
50 Hz 230 VΔ/400 VY 60 Hz 460 VY	**Standard**	**2 2**	–
50 Hz 400 VΔ/690 VY 60 Hz 460 VΔ	**Standard**	**3 4**	–
50 Hz 500 VY	Without additional charge	**2 7**	–
50 Hz 500 VΔ	Without additional charge	**4 0**	–
For other voltages and more information, see from page 6/73		**9 0**	**...**
Types of construction	Version		Order code
Without flange IM B3 [2)]	**Standard**	**A**	–
With flange IM B5 [2)]	With additional charge	**F**	–
With flange IM B14 [2)]	With additional charge	**K**	–
For other types of construction and more information, see from page 6/84		■	**...**
Motor protection	Version		
Without	**Standard**	**A**	
PTC thermistor with 3 temperature sensors	With additional charge	**B**	
For other motor protection and more information, see from page 6/91		■	
Terminal box position	Version		
Terminal box at top	**Standard**	**4**	
For other terminal box positions and more information, see from page 6/96		■	
Special versions			Order code(s)
For options, see from page 6/111		**1MB.5 ■ 3- .... ■ · ■■■■ -Z**	**...+...+...+...**

6

For footnotes, see page 6/59

© Innomotics 2024

Innomotics XP 1MB1, 1MB5 explosion-protected motors

Cast-iron series 1MB553/1MB.563 – self-ventilated

Selection and ordering data

P_{rated}, 50 Hz	P_{rated}, 60 Hz	Frame size	Operating values at rated power: n_{rated}, 50 Hz	T_{rated}, 50 Hz	η_{rated}, 50 Hz, 4/4	η_{rated}, 50 Hz, 3/4	η_{rated}, 50 Hz, 2/4	$\cos\varphi$ rated, 50 Hz, 4/4	I_{rated}, 50 Hz, 400 V	T_{LR}/T_{rated}	I_{LR}/I_{rated}	T_B/T_{rated}	L_{pfA}, 50 Hz[1]	L_{WA}, 50 Hz[1]	Cast-iron series 1MB15■3/1MB55■3 Article-No.	$m_{IM\ B3}$	J
kW	kW	FS	rpm	Nm	%	%	%		A				dB(A)	dB(A)		kg	kgm²
_ Cooling: self-ventilated (IC411)																	
_ Efficiency according to IEC 60034-30: IE3 Premium Efficiency																	
_ Insulation: Thermal class 155 (temperature class F), IP55 degree of protection, utilization in accordance with thermal class 130 (temperature class B)																	
6-pole: 1000 rpm at 50 Hz, 1200 rpm at 60 Hz																	
0.18	**0.18**	**71 M**	885	1.94	63.9	64.8	60.8	0.69	0.59	2.3	2.8	2.3	39	50	**1MB15 ■ 3-0CC2 ■-■■■■**	24	0.00103
0.25	**0.25**	**71 M**	885	2.7	68.6	69.5	66.2	0.69	0.76	2.6	3.2	2.6	46	57	**1MB15 ■ 3-0CC3 ■-■■■■**	26	0.00143
0.37	**0.37**	**80 M**	940	3.75	73.5	73.1	69.4	0.66	1.1	2.3	4.2	2.7	42	53	**1MB15 ■ 3-0DC2 ■-■■■■**	31	0.00248
0.55	**0.55**	**80 M**	935	5.6	77.2	77	73.9	0.67	1.53	2.5	4.5	2.8	42	53	**1MB15 ■ 3-0DC3 ■-■■■■**	34	0.00308
0.75	**0.75**	**90 L**	945	7.6	78.9	80	78.8	0.7	1.96	2.2	4.6	2.6	43	55	**1MB15 ■ 3-0EC0 ■-■■■■**	43	0.0041
1.1	**1.1**	**100 L**	975	10.8	81	81	79	0.71	2.75	2.2	5.6	2.9	59	71	**1MB15 ■ 3-1AC3 ■-■■■■**	67	0.0104
1.5	**1.5**	**112 M**	975	14.7	82.5	82.8	81.2	0.76	3.45	2	5.7	2.8	62	74	**1MB15 ■ 3-1BC1 ■-■■■■**	75	0.0199
2.2	**2.2**	**132 S**	975	21.5	84.3	84.7	83.7	0.74	5.1	2.1	6.5	3.1	57	65	**1MB15 ■ 3-1CC1 ■-■■■■**	98	0.0348
3	**3**	**132 S**	975	29.5	85.6	86.1	84.9	0.73	6.9	2.3	6.6	3.2	58	66	**1MB15 ■ 3-1CC0 ■-■■■■**	98	0.0348
4	**4**	**132 M**	975	39	86.8	87.1	86.2	0.73	9.1	2.2	6.2	3	67	75	**1MB15 ■ 3-1CC2 ■-■■■■**	101	0.04
5.5	**5.5**	**132 M**	975	54	88	88.3	87.2	0.72	12.5	2.7	6.8	3.4	64	72	**1MB15 ■ 3-1CC3 ■-■■■■**	115	0.0519
7.5	**7.5**	**160 M**	985	73	89.1	89.5	88.6	0.81	15	2.3	7.9	3.2	71	79	**1MB15 ■ 3-1DC2 ■-■■■■**	184	0.136
11	**11**	**160 L**	980	107	90.3	90.8	90.2	0.8	22	2.9	6.8	2.8	66	74	**1MB15 ■ 3-1DC4 ■-■■■■**	200	0.168
15	**15**	**180 L**	975	147	91.2	91.9	91.9	0.8	29.5	2.3	5.9	2.8	61	68	**1MB15 ■ 3-1EC4 ■-■■■■**	236	0.21
18.5	**18.5**	**200 L**	978	181	91.7	92.5	92.5	0.79	37	2.5	5.6	2.6	64	71	**1MB15 ■ 3-2AC4 ■-■■■■**	325	0.315
22	**22**	**200 L**	978	215	92.2	93.1	93.2	0.79	43.5	2.5	5.6	2.6	61	68	**1MB15 ■ 3-2AC5 ■-■■■■**	339	0.352
30	**30**	**225 M**	980	290	92.9	93.4	93.2	0.83	56	2.7	6.6	2.9	62	76	**1MB15 ■ 3-2BC2 ■-■■■■**	458	0.671
37	**37**	**250 M**	984	360	93.3	93.9	93.8	0.84	68	2.8	7.2	2.9	58	72	**1MB15 ■ 3-2CC2 ■-■■■■**	533	1
45	**45**	**280 S**	988	435	93.7	94.3	94.4	0.85	82	2.7	7.5	2.8	62	76	**1MB15 ■ 3-2DC0 ■-■■■■**	689	1.34
55	**55**	**280 M**	988	530	94.1	94.6	94.4	0.85	99	3.2	7.2	2.9	61	76	**1MB15 ■ 3-2DC2 ■-■■■■**	748	1.63
75	**75**	**315 S**	992	720	94.6	94.7	94.3	0.8	N/A	2.4	7	2.8	68	84	**1MB55 ■ 3-3AC0 ■-■■■■**	1070	2.98
90	**90**	**315 M**	992	870	94.9	95	94.6	0.83	N/A	2.5	7.3	2.8	64	79	**1MB55 ■ 3-3AC2 ■-■■■■**	1130	3.54
110	**110**	**315 L**	992	1060	95.1	95.3	95.1	0.83	N/A	2.4	7.4	2.8	68	83	**1MB55 ■ 3-3AC4 ■-■■■■**	1320	4.25
132	**132**	**315 L**	992	1270	95.4	95.7	95.5	0.83	N/A	2.5	7.8	2.9	68	83	**1MB55 ■ 3-3AC5 ■-■■■■**	1380	4.89
160	**160**	**315 L**	992	1540	95.6	95.8	95.6	0.82	N/A	2.6	7.3	2.9	72	87	**1MB55 ■ 3-3AC6 ■-■■■■**	1520	5.74
200	**200**	**315 L**	991	1930	95.8	96	95.8	0.81	N/A	2.7	7	3	67	82	**1MB55 ■ 3-3AC7 ■-■■■■**	1670	6.41
250	**250**	**355 L**	993	2400	95.8	96	95.7	0.87	N/A	2.4	7.3	2.8	75	91	**1MB55 ■ 3-3BC1 ■-■■■■**	2360	11.3
315	**315**	**355 L**	992	3050	95.8	96.2	96.2	0.87	N/A	2.4	6.8	2.7	71	86	**1MB55 ■ 3-3BC2 ■-■■■■**	2630	13.8
355	**355**	**355 L**	994	3400	95.8	95.9	95.4	0.84	N/A	2.9	7.7	3.2	74	89	**1MB55 ■ 3-3BC3 ■-■■■■**	2650	13.8
380	**380**	**355 L**	993	3650	95.8	95.9	95.6	0.84	N/A	2.9	7.7	3.2	76	90	**1MB55 ■ 3-3BC4 ■-■■■■**	2650	13.5

Zones					Order code
Zone 1 (explosive gases occasionally or frequently) Ex db IIC			**5**		–
Zone 1 (explosive gases occasionally or frequently) Ex db IIB			**6**		–
Voltages		Version			Order code
50 Hz 230 VΔ/400 VY	60 Hz 460 VY	**Standard**	**2**	**2**	–
50 Hz 400 VΔ/690 VY	60 Hz 460 VΔ	**Standard**	**3**	**4**	–
50 Hz 500 VY		Without additional charge	**2**	**7**	–
50 Hz 500 VΔ		Without additional charge	**4**	**0**	–
For other voltages and more information, see from page 6/73			**9**	**0**	**...**
Types of construction		Version			Order code
Without flange	IM B3 [2]	**Standard**		**A**	–
With flange	IM B5 [2]	With additional charge		**F**	–
With flange	IM B14 [2]	With additional charge		**K**	–
For other types of construction and more information, see from page 6/84				■	**...**
Motor protection		Version			
Without		**Standard**		**A**	
PTC thermistor with 3 temperature sensors		With additional charge		**B**	
For other motor protection and more information, see from page 6/91				■	
Terminal box position		Version			
Terminal box at top		**Standard**			**4**
For other terminal box positions and more information, see from page 6/96					■
Special versions					Order code(s)
For options, see from page 6/111			**1MB.5 ■ 3- ....**	**■·■■■■-Z**	**...+...+...+...**

For footnotes, see page 6/59

© Innomotics 2024

Selection and ordering data

P_{rated}, 50 Hz	P_{rated}, 60 Hz	Frame size	Operating values at rated power n_{rated}, 50 Hz	T_{rated}, 50 Hz	η_{rated}, 50 Hz, 4/4	η_{rated}, 50 Hz, 3/4	η_{rated}, 50 Hz, 2/4	$\cos\varphi$ rated, 50 Hz, 4/4	I_{rated}, 50 Hz, 400 V	T_{LR}/T_{rated}	I_{LR}/I_{rated}	T_B/T_{rated}	L_{pfA}, 50 Hz[1]	L_{WA}, 50 Hz[1]	Cast-iron series 1MB15■3/1MB55■3 Article-No.	$m_{IM\ B3}$	J
kW	kW	FS	rpm	Nm	%	%	%		A				dB(A)	dB(A)		kg	kgm²
_ Cooling: self-ventilated (IC411)																	
_ Efficiency according to IEC 60034-30: IE3 Premium Efficiency																	
_ Insulation: Thermal class 155 (temperature class F). IP55 degree of protection. utilization in accordance with thermal class 130 (temperature class B)																	
8-pole: 750 rpm at 50 Hz. 900 rpm at 60 Hz																	
0.09	0.09	71 M	650	1.32	44.1	42.8	37.3	0.64	0.46	1.9	2.2	1.9	46	53	1MB15 ■ 3-0CD2 ■-■■■■	25	0.00103
0.12	0.12	71 M	660	1.74	50.7	49.9	44.8	0.63	0.54	2.1	2.5	2.1	46	53	1MB15 ■ 3-0CD3 ■-■■■■	27	0.00143
0.18	0.18	80 M	705	2.45	58.7	55.8	49.2	0.49	0.9	2.3	3	2.8	48	61	1MB15 ■ 3-0DD2 ■-■■■■	30	0.00218
0.25	0.25	80 M	695	3.45	64.1	62.7	57.8	0.57	0.93	1.8	2.9	2.1	52	59	1MB15 ■ 3-0DD3 ■-■■■■	33	0.00308
0.37	0.37	90 L	685	5.2	69.3	68.3	63.7	0.68	1.13	1.7	2.9	1.8	56	53	1MB15 ■ 3-0ED0 ■-■■■■	42	0.0041
0.55	0.55	90 L	695	7.6	73	71.2	66.5	0.67	1.62	2	3.5	2.3	61	68	1MB15 ■ 3-0ED4 ■-■■■■	42	0.0049
0.75	0.75	100 L	710	10.1	75	75.7	73.1	0.67	2.1	1.5	3.7	2.1	61	69	1MB15 ■ 3-1AD4 ■-■■■■	59	0.009
1.1	1.1	100 L	710	14.8	77.7	76.4	75.1	0.67	3.05	1.8	4.1	2.3	62	70	1MB15 ■ 3-1AD5 ■-■■■■	64	0.0124
1.5	1.5	112 M	720	19.9	79.7	85.6	77.3	0.63	4.15	2.6	5.1	3.1	62	70	1MB15 ■ 3-1BD2 ■-■■■■	74	0.0267
2.2	2.2	132 S	725	29	81.9	82.5	80.9	0.71	5.3	1.9	5	2.5	65	73	1MB15 ■ 3-1CD0 ■-■■■■	96	0.048
3	3	132 M	725	39.5	83.5	83.8	82.2	0.72	7.1	2	5.2	2.5	70	78	1MB15 ■ 3-1CD2 ■-■■■■	104	0.0686
4	4	160 M	730	52	84.8	86	85.5	0.74	9.1	1.6	4.7	2.1	63	71	1MB15 ■ 3-1DD2 ■-■■■■	157	0.0782
5.5	5.5	160 M	730	72	86.2	87	86.3	0.73	12.4	2	5.5	2.4	68	76	1MB15 ■ 3-1DD3 ■-■■■■	169	0.103
7.5	7.5	160 L	730	98	87.3	87.9	86.9	0.73	16.9	2.3	5.8	2.7	70	78	1MB15 ■ 3-1DD4 ■-■■■■	183	0.132
11	11	180 L	725	145	88.6	89.7	89.6	0.74	24	2.1	5.1	2.4	61	74	1MB15 ■ 3-1ED4 ■-■■■■	259	0.264
15	15	200 L	730	196	89.6	90.1	89.4	0.73	33.5	3	6.8	3.7	57	70	1MB15 ■ 3-2AD5 ■-■■■■	357	0.417
18.5	18.5	225 S	734	240	90.1	90.7	90.2	0.76	39	2.5	5.9	3	56	70	1MB15 ■ 3-2BD0 ■-■■■■	417	0.499
22	22	225 M	732	285	90.6	91.3	90.9	0.77	45.5	2.6	5.9	2.9	56	70	1MB15 ■ 3-2BD2 ■-■■■■	425	0.547
30	30	250 M	734	390	91.3	91.9	91.6	0.79	60	2.6	6.1	3	60	74	1MB15 ■ 3-2CD2 ■-■■■■	512	0.842
37	37	280 S	736	480	91.8	92.5	92.4	0.8	73	2.3	5.4	2.3	60	74	1MB15 ■ 3-2DD0 ■-■■■■	680	1.08
45	45	280 M	738	580	92.2	92.8	92.5	0.81	87	2.5	5.9	2.5	60	74	1MB15 ■ 3-2DD2 ■-■■■■	743	1.62
55	55	315 S	744	710	92.5	92.8	92.4	0.81	N/A	2.4	6.4	2.6	67	82	1MB55 ■ 3-3AD0 ■-■■■■	1020	3.15
75	75	315 M	742	970	93.1	93.3	92.8	0.8	N/A	2.5	6.3	2.6	69	84	1MB55 ■ 3-3AD2 ■-■■■■	1090	3.15
90	90	315 L	742	1160	93.4	93.9	93.7	0.82	N/A	2.3	6.3	2.5	67	82	1MB55 ■ 3-3AD4 ■-■■■■	1290	4.49
110	110	315 L	742	1420	93.7	94	93.6	0.82	N/A	2.6	6.6	2.6	68	83	1MB55 ■ 3-3AD5 ■-■■■■	1290	4.49
132	132	315 L	741	1700	94	94.4	94.2	0.82	N/A	2.4	6.4	2.5	65	80	1MB55 ■ 3-3AD6 ■-■■■■	1370	5.15
160	160	315 L	741	2050	94.3	94.7	94.7	0.79	N/A	2.6	6.2	2.5	72	87	1MB55 ■ 3-3AD7 ■-■■■■	1650	6.77
200	200	355 L	744	2550	94.6	95	95	0.8	N/A	2.3	7.1	2.7	73	88	1MB55 ■ 3-3BD0 ■-■■■■	2340	11.3
250	250	355 L	744	3200	94.6	94.9	94.8	0.82	N/A	2.4	7.2	2.7	72	88	1MB55 ■ 3-3BD1 ■-■■■■	2650	13.8
300	300	355 L	744	3850	94.6	94.8	94.4	0.78	N/A	3.2	7.4	3	73	88	1MB55 ■ 3-3BD2 ■-■■■■	2630	13.8

Zones								Order code
Zone 1 (explosive gases occasionally or frequently) Ex db IIC				5				–
Zone 1 (explosive gases occasionally or frequently) Ex db IIB				6				–
Voltages		Version						Order code
50 Hz 230 VΔ/400 VY	60 Hz 460 VY	**Standard**			2	2		–
50 Hz 400 VΔ/690 VY	60 Hz 460 VΔ	**Standard**			3	4		–
50 Hz 500 VY		Without additional charge			2	7		–
50 Hz 500 VΔ		Without additional charge			4	0		–
For other voltages and more information, see from page 6/73					9	0		. . .
Types of construction		Version						Order code
Without flange	IM B3 [2]	**Standard**				A		–
With flange	IM B5 [2]	With additional charge				F		–
With flange	IM B14 [2]	With additional charge				K		–
For other types of construction and more information, see from page 6/84						■		. . .
Motor protection		Version						
Without		**Standard**					A	
PTC thermistor with 3 temperature sensors		With additional charge					B	
For other motor protection and more information, see from page 6/91							■	
Terminal box position		Version						
Terminal box at top		**Standard**						4
For other terminal box positions and more information, see from page 6/96								■
Special versions								Order code(s)
For options, see from page 6/111			1MB.5	■ 3-	■	■■■■	-Z	. . .+. . .+. . .+. . .

[1] Noise values for line operation under load, tolerance +3dB(A).

[2] Types derived from IM B3 (IM B6/7/8, IM V6 and IM V5), from IM B5 (IM V3 and IM V1) and from IM B14 (IM V19 and IM V18) are possible. The basic type IM B3, IM B5 or IM B14 is stamped as standard on the rating plate.

© Innomotics 2024

Innomotics XP 1MB1, 1MB5 explosion-protected motors

IE2

Please note minimum legal efficiencies in the European Economic Area

Cast-iron series 1MB.556/1MB.566 - self-ventilated

Selection and ordering data

P_{rated}, 50 Hz	Frame size	Operating values at rated power n_{rated}, 50 Hz	T_{rated}, 50 Hz	η_{rated}, 50 Hz, 4/4	η_{rated}, 50 Hz, 3/4	η_{rated}, 50 Hz, 2/4	$\cos\varphi$ rated, 50 Hz, 4/4	I_{rated}, 50 Hz, 400 V	T_{LR}/T_{rated}	I_{LR}/I_{rated}	T_B/T_{rated}	L_{pfA}, 50 Hz 1)	L_{WA}, 50 Hz 1)	Cast-iron series 1MB15■6/1MB55■6 Article-No.	$m_{IM\ B3}$	J
kW	BG	min⁻¹	Nm	%	%	%		A				dB(A)	dB(A)		kg	kgm²
_ Cooling: self-ventilated (IC411)																
_ Efficiency according to IEC 60034-30-1: IE2 High Efficiency																
_ Line operation (DOL) 2)																
_ Starting current maximal 600% without plus tolerance																
_ Insulation: Thermal class 155 (temperature class F), utilization in accordance with thermal class 130 (temperature class B), IVIC C																
_ Standard version and stamping -20 to +40°C; increased ambient temperature can be ordered with Y50, to max. +55°C without derating.																
2-pole: 3000 rpm at 50 Hz																
0.25	**71 M**	2850	0.84	64.8	65.1	62.6	0.8	0.7	2.3	6	3.3	59	67	**1MB15 ■ 6-0CA2 ■-■■■■**	24	0.00043
0.37	**71 M**	2810	1.26	69.5	69.9	67.9	0.84	0.91	3	6	2.9	60	68	**1MB15 ■ 6-0CA3 ■-■■■■**	25	0.00053
0.55	**80 M**	2840	1.85	74.1	75.7	75.2	0.87	1.23	2	6	2.8	64	72	**1MB15 ■ 6-0DA2 ■-■■■■**	30	0.00108
0.75	**80 M**	2850	2.5	80.7	82.6	82.4	0.87	1.54	2.3	6	3.2	70	78	**1MB15 ■ 6-0DA3 ■-■■■■**	32	0.00138
1.1	**90 L**	2865	3.65	79.6	81.6	81.6	0.9	2.2	1.6	6	2.7	66	74	**1MB15 ■ 6-0EA0 ■-■■■■**	41	0.0024
1.5	**90 L**	2845	5	81.3	83.7	85	0.93	2.85	2.3	6	2.3	65	73	**1MB15 ■ 6-0EA4 ■-■■■■**	45	0.0032
2.2	**100 L**	2865	7.3	83.2	86	87.3	0.92	4.05	1.9	6	2.5	70	78	**1MB15 ■ 6-1AA4 ■-■■■■**	64	0.0048
3	**112 M**	2920	9.8	84.6	86.8	87.5	0.92	5.6	1.7	6	2.1	71	79	**1MB15 ■ 6-1BA2 ■-■■■■**	74	0.0099
4	**132 S**	2930	13	85.8	87.8	88.8	0.93	7.2	1.5	6	2.2	71	79	**1MB15 ■ 6-1CA0 ■-■■■■**	106	0.0272
5.5	**132 S**	2930	17.9	87	89	90.1	0.93	9.8	1.5	6	2.3	70	78	**1MB15 ■ 6-1CA1 ■-■■■■**	120	0.0278
7.5	**160 M**	2940	24.5	88.1	88.7	88.2	0.91	13.5	1.9	6	2.4	77	85	**1MB15 ■ 6-1DA2 ■-■■■■**	169	0.0457
11	**160 M**	2930	36	89.4	90	89.9	0.92	19.3	1.8	6	2.3	77	85	**1MB15 ■ 6-1DA3 ■-■■■■**	190	0.0637
15	**160 L**	2925	49	90.3	91.8	92.5	0.92	26	1.8	6	2.3	77	85	**1MB15 ■ 6-1DA4 ■-■■■■**	206	0.0772
18.5	**180 M**	2930	60	90.9	91.7	91.7	0.91	32.5	1.6	6	2.6	72	80	**1MB15 ■ 6-1EA2 ■-■■■■**	247	0.0953
22	**200 L**	2940	71	91.3	91.6	90.8	0.89	39	2	6	2.6	74	82	**1MB15 ■ 6-2AA4 ■-■■■■**	315	0.15
30	**200 L**	2940	97	92	92.4	92	0.89	53	2.2	6	2.5	74	82	**1MB15 ■ 6-2AA5 ■-■■■■**	348	0.178
37	**225 M**	2945	120	92.5	93	92.7	0.9	64	1.9	6	2.3	73	87	**1MB15 ■ 6-2BA2 ■-■■■■**	447	0.263
45	**250 M**	2965	145	92.9	93.4	93.3	0.89	79	1.9	6	2.3	75	89	**1MB15 ■ 6-2CA2 ■-■■■■**	532	0.454
55	**280 S**	2965	177	93.2	93.6	93.2	0.89	96	1.8	6	2.2	76	90	**1MB15 ■ 6-2DA2 ■-■■■■**	763	0.924
75	**315 S**	2975	240	93.8	94.1	93.7	0.9	128	1.8	6	2.3	77	92	**1MB55 ■ 6-3AA0 ■-■■■■**	1130	1.76
90	**315 M**	2978	290	94.1	94.2	93.5	0.9	153	1.8	6	2.3	77	92	**1MB55 ■ 6-3AA2 ■-■■■■**	1290	1.99
110	**315 L**	2975	355	94.3	94.6	94.2	0.91	185	1.7	6	2	78	92	**1MB55 ■ 6-3AA4 ■-■■■■**	1360	2.29
132	**315 L**	2978	425	94.6	94.8	94.3	0.92	220	1.9	6	2.3	78	93	**1MB55 ■ 6-3AA5 ■-■■■■**	1490	2.65
160	**315 L**	2970	510	94.8	95.2	95.1	0.9	270	1.7	6	2	79	94	**1MB55 ■ 6-3AA6 ■-■■■■**	1590	2.85
200	**355 L**	2982	640	95	95.2	94.9	0.9	340	1.5	6	2.2	79	95	**1MB55 ■ 6-3BA2 ■-■■■■**	1830	4.31
250	**355 L**	2980	800	95	95.3	95.1	0.89	427	1.4	6	2.1	81	96	**1MB55 ■ 6-3BA4 ■-■■■■**	2610	5.89
300	**355 L**	2982	960	95	95.3	95	0.88	520	1.6	6	2.4	81	96	**1MB55 ■ 6-3BA5 ■-■■■■**	2620	5.89

Zones																	Order code
Zone 1 (explosive gases occasionally or frequently) Ex db IIC															**5**		–
Zone 1 (explosive gases occasionally or frequently) Ex db IIB															**6**		–
Voltages													Version				Order code
50 Hz 230 VΔ/400 VY													**Standard**	**2**	**2**		–
50 Hz 400 VΔ/690 VY													**Standard**	**3**	**4**		–
50 Hz 500 VY													Without additional charge	**2**	**7**		–
50 Hz 500 VΔ													Without additional charge	**4**	**0**		–
For other voltages and more information, see from page 6/73														**9**	**0**		. . .
Types of construction													Version				Order code
Without flange	IM B3 3)												**Standard**			**A**	–
With flange	IM B5 3)												With additional charge			**F**	–
With flange	IM B14 3)												With additional charge			**K**	–
For other types of construction and more information, see from page 6/84																■	. . .
Motor protection													Version				
Without													**Standard**			**A**	
PTC thermistor with 3 temperature sensors													With additional charge			**B**	
For other motor protection and more information, see from page 6/91																■	
Terminal box position													Version				
Terminal box at top													**Standard**			**4**	
For other terminal box positions and more information, see from page 6/96																■	
Special versions																	Order code(s)
For options, see from page 6/111														**1MB.5 ■ 6- . . . .**	■	■■■■ -Z	. . .+. . .+. . .+. . .

For footnotes see page 6/62

© Innomotics 2024

Selection and ordering data

P_{rated}, 50 Hz	Frame size	Operating values at rated power: n_{rated}, 50 Hz	T_{rated}, 50 Hz	η_{rated}, 50 Hz, 4/4	η_{rated}, 50 Hz, 3/4	η_{rated}, 50 Hz, 2/4	$\cos\varphi$ rated, 50 Hz, 4/4	I_{rated}, 50 Hz, 400 V	T_{LR}/T_{rated}	I_{LR}/I_{rated}	T_B/T_{rated}	L_{pfA}, 50 Hz[1]	L_{WA}, 50 Hz[1]	Cast-iron series 1MB15■6/1MB55■6 Article-No.	$m_{IM\ B3}$	J
kW	FS	rpm	Nm	%	%	%		A				dB(A)	dB(A)		kg	kgm²
_ Cooling: self-ventilated (IC411)																
_ Efficiency according to IEC 60034-30-1: IE2 High Efficiency																
_ Line operation (DOL) [2]																
_ Starting current maximal 600% without plus tolerance																
_ Insulation: Thermal class 155 (temperature class F), utilization in accordance with thermal class 130 (temperature class B), IVIC C																
_ Standard version and stamping -20 to +40°C; increased ambient temperature can be ordered with Y50, to max. +55°C without derating.																
4-pole: 1500 rpm at 50 Hz																
0.18	**71 M**	1410	1.22	64.7	64.7	61.8	0.72	0.56	2.3	6	2.6	57	65	**1MB15 ■ 6-0CB2 ■-■■■■**	25	0.00103
0.25	**71 M**	1435	1.66	68.5	66.8	61.9	0.64	0.82	3.6	6	4.5	62	70	**1MB15 ■ 6-0CB3 ■-■■■■**	27	0.00133
0.37	**80 M**	1435	2.45	72.7	74.8	74.2	0.81	0.91	1.6	6	2.7	62	70	**1MB15 ■ 6-0DB2 ■-■■■■**	30	0.00218
0.55	**80 M**	1440	3.65	77.1	77.5	75.6	0.8	1.29	2.1	6	2.7	54	62	**1MB15 ■ 6-0DB3 ■-■■■■**	33	0.00298
0.75	**90 L**	1425	5	79.6	81	80.2	0.84	1.62	2.1	6	2.5	58	66	**1MB15 ■ 6-0EB0 ■-■■■■**	42	0.0038
1.1	**90 L**	1425	7.4	81.4	83.6	83.9	0.84	2.3	2	6	2.6	55	63	**1MB15 ■ 6-0EB4 ■-■■■■**	45	0.005
1.5	**100 L**	1445	9.9	82.8	85.2	86	0.87	3	1.8	6	2.2	57	65	**1MB15 ■ 6-1AB4 ■-■■■■**	68	0.0124
2.2	**100 L**	1435	14.6	84.3	87	88.6	0.87	4.35	1.6	6	2.2	62	70	**1MB15 ■ 6-1AB5 ■-■■■■**	68	0.0124
3	**112 M**	1445	19.8	85.5	87.4	87.9	0.87	5.8	1.6	6	2.4	74	82	**1MB15 ■ 6-1BB2 ■-■■■■**	76	0.0146
4	**132 S**	1460	26	86.6	88	88.4	0.87	7.7	1.6	6	2.2	57	65	**1MB15 ■ 6-1CB0 ■-■■■■**	105	0.0352
5.5	**132 M**	1460	36	87.7	89.2	89.6	0.87	10.4	1.8	6	2.4	64	72	**1MB15 ■ 6-1CB2 ■-■■■■**	120	0.0404
7.5	**160 M**	1470	48.5	88.7	89.5	89.5	0.87	14	1.8	6	2.3	64	72	**1MB15 ■ 6-1DB2 ■-■■■■**	168	0.0733
11	**160 L**	1470	71	89.8	90.7	91.2	0.87	20.5	2.2	6	2.3	60	68	**1MB15 ■ 6-1DB4 ■-■■■■**	191	0.0877
15	**180 M**	1455	98	90.6	91.9	92.6	0.86	28	1.7	6	2.4	62	70	**1MB15 ■ 6-1EB2 ■-■■■■**	240	0.1445
18.5	**180 L**	1460	121	91.2	92.4	93	0.85	34.5	1.8	6	2.6	66	74	**1MB15 ■ 6-1EB4 ■-■■■■**	249	0.1582
22	**200 L**	1455	144	91.6	92.8	93.6	0.87	40	1.7	6	2.1	67	75	**1MB15 ■ 6-2AB5 ■-■■■■**	346	0.248
30	**225 S**	1475	194	92.3	93.1	93.2	0.87	54	2	6	2	65	79	**1MB15 ■ 6-2BB0 ■-■■■■**	449	0.469
37	**225 M**	1475	240	92.7	93.5	93.7	0.87	66	2.2	6	2.2	64	78	**1MB15 ■ 6-2BB2 ■-■■■■**	466	0.521
45	**250 M**	1478	290	93.1	93.8	93.9	0.88	79	1.9	6	2.3	67	81	**1MB15 ■ 6-2CB2 ■-■■■■**	563	0.842
55	**280 S**	1480	355	93.5	94.2	94.3	0.89	95	1.9	6	2.1	69	84	**1MB15 ■ 6-2DB0 ■-■■■■**	782	1.37
75	**280 M**	1480	485	94	94.7	94.9	0.89	129	1.9	6	2.2	73	87	**1MB15 ■ 6-2DB2 ■-■■■■**	818	1.7
90	**315 S**	1486	580	94.2	94.7	94.6	0.85	162	2	6	2	69	84	**1MB55 ■ 6-3AB0 ■-■■■■**	1150	2.48
110	**315 M**	1488	710	94.5	95	95	0.86	195	1.8	6	2.3	72	88	**1MB55 ■ 6-3AB2 ■-■■■■**	1270	2.79
132	**315 L**	1485	850	94.7	95.4	95.6	0.86	235	1.4	6	1.9	76	91	**1MB55 ■ 6-3AB5 ■-■■■■**	1480	3.79
160	**315 L**	1488	1030	94.9	95.3	95.2	0.87	280	1.7	6	2.2	78	93	**1MB55 ■ 6-3AB6 ■-■■■■**	1660	4.57
200	**355 L**	1488	1280	95.1	95.4	95.2	0.88	345	1.6	6	2.3	75	91	**1MB55 ■ 6-3BB2 ■-■■■■**	2140	5.6
250	**355 L**	1488	1600	95.1	95.5	95.5	0.87	435	1.4	6	2.1	79	94	**1MB55 ■ 6-3BB4 ■-■■■■**	2420	7.02
315	**355 L**	1488	2000	96	96.5	96.6	0.85	560	1.9	6	2.1	79	95	**1MB55 ■ 6-3BB5 ■-■■■■**	2720	8.48

Zones			Order code
Zone 1 (explosive gases occasionally or frequently) Ex db IIC		**5**	–
Zone 1 (explosive gases occasionally or frequently) Ex db IIB		**6**	–
Voltages	Version		Order code
50 Hz 230 VΔ/400 VY	**Standard**	**2 2**	–
50 Hz 400 VΔ/690 VY	**Standard**	**3 4**	–
50 Hz 500 VY	Without additional charge	**2 7**	–
50 Hz 500 VΔ	Without additional charge	**4 0**	–
For other voltages and more information, see from page 6/73		**9 0**	**...**
Types of construction	Version		Order code
Without flange IM B3 [23]	**Standard**	**A**	–
With flange IM B5 [3]	With additional charge	**F**	–
With flange IM B14[3]	With additional charge	**K**	–
For other types of construction and more information, see from page 6/84		■	**...**
Motor protection	Version		
Without	**Standard**	**A**	
PTC thermistor with 3 temperature sensors	With additional charge	**B**	
For other motor protection and more information, see from page 6/91		■	
Terminal box position	Version		
Terminal box at top	**Standard**	**4**	
For other terminal box positions and more information, see from page 6/96		■	
Special versions			Order code(s)
For options, see from page 6/111		**1MB.5 ■ 6-....**	■ · ■■■■ -Z ...+...+...+...

For footnotes see page 6/62

© Innomotics 2024

Innomotics XP 1MB1, 1MB5 explosion-protected motors

IE2

Please note minimum legal efficiencies in the European Economic Area!

Cast-iron series 1MB.556/1MB.566 - self-ventilated

Selection and ordering data

P_{rated}, 50 Hz	Frame size	Operating values at rated power n_{rated}, 50 Hz	T_{rated}, 50 Hz	η_{rated}, 50 Hz, 4/4	η_{rated}, 50 Hz, 3/4	η_{rated}, 50 Hz, 2/4	$\cos\varphi$ rated, 50 Hz, 4/4	I_{rated}, 50 Hz, 400 V	T_{LR}/T_{rated}	I_{LR}/I_{rated}	T_B/T_{rated}	L_{pfA}, 50 Hz[1]	L_{WA}, 50 Hz[1]	Cast-iron series 1MB15■6/1MB55■6 Article-No.	$m_{IM\ B3}$	J
kW	FS	rpm	Nm	%	%	%		A				dB(A)	dB(A)		kg	kgm²
_ Cooling: self-ventilated (IC411)																
_ Efficiency according to IEC 60034-30-1: IE2 High Efficiency																
_ Line operation (DOL) [2]																
_ Starting current maximal 600% without plus tolerance																
_ Insulation: Thermal class 155 (temperature class F), utilization in accordance with thermal class 130 (temperature class B), IVIC C																
_ Standard version and stamping -20 to +40°C; increased ambient temperature can be ordered with Y50, to max. +55°C without derating.																
6-pole: 1000 rpm at 50 Hz																
0.12	**71 M**	935	1.23	50.6	48.1	42.1	0.57	0.6	3	6	3.4	61	69	**1MB15 ■ 6-0CC2 ■-■■■■**	24	0.00103
0.18	**71 M**	925	1.86	56.6	54.9	49.8	0.59	0.78	3.6	6	3.7	53	61	**1MB15 ■ 6-0CC3 ■-■■■■**	26	0.00143
0.25	**80 M**	965	2.45	61.6	59.2	53.9	0.53	1.11	3.8	6	4.2	59	67	**1MB15 ■ 6-0DC2 ■-■■■■**	31	0.00248
0.37	**80 M**	965	3.65	67.6	65.8	60.7	0.54	1.46	3.5	6	4.9	61	69	**1MB15 ■ 6-0DC3 ■-■■■■**	34	0.00308
0.55	**90 L**	955	5.5	73.1	74	72	0.7	1.55	2.1	6	2.6	58	66	**1MB15 ■ 6-0EC0 ■-■■■■**	43	0.0041
0.75	**100 L**	975	7.3	75.9	76.1	74.3	0.69	2.05	2.3	6	2.7	61	69	**1MB15 ■ 6-1AC3 ■-■■■■**	67	0.0104
1.1	**112 M**	970	10.8	78.1	78.3	76.6	0.75	2.7	1.8	6	2.4	57	65	**1MB15 ■ 6-1BC1 ■-■■■■**	75	0.0199
1.5	**132 S**	975	14.7	79.8	81.4	81.4	0.75	3.6	1.8	6	2.7	54	62	**1MB15 ■ 6-1CC1 ■-■■■■**	98	0.0348
2.2	**132 S**	970	21.5	81.8	83	82.3	0.76	5.1	1.8	6	2.6	60	68	**1MB15 ■ 6-1CC0 ■-■■■■**	98	0.0348
3	**132 M**	970	29.5	83.3	85.4	85.6	0.75	6.9	1.8	6	2.6	65	73	**1MB15 ■ 6-1CC2 ■-■■■■**	98	0.0348
4	**132 M**	970	39.5	84.6	85	83.5	0.73	9.3	2	6	2.9	57	65	**1MB15 ■ 6-1CC3 ■-■■■■**	98	0.0348
5.5	**160 M**	980	54	86	87.5	88.3	0.85	10.9	1.6	6	2.2	59	67	**1MB15 ■ 6-1DC2 ■-■■■■**	184	0.136
7.5	**160 L**	980	73	87.2	88.1	87.6	0.8	15.5	2.1	6	2.4	62	70	**1MB15 ■ 6-1DC4 ■-■■■■**	184	0.136
11	**180 L**	970	108	88.7	90.4	91.1	0.8	22.5	1.6	6	2.8	60	68	**1MB15 ■ 6-1EC4 ■-■■■■**	236	0.21
15	**200 L**	975	147	89.7	91.1	91.6	0.8	30	1.8	6	2.5	60	68	**1MB15 ■ 6-2AC4 ■-■■■■**	325	0.315
18.5	**200 L**	975	181	90.4	91.8	92.4	0.79	37.5	1.9	6	2.5	65	73	**1MB15 ■ 6-2AC5 ■-■■■■**	339	0.352
22	**225 M**	975	215	90.9	92	92.3	0.85	41	2.1	6	2.3	62	76	**1MB15 ■ 6-2BC2 ■-■■■■**	458	0.671
30	**250 M**	978	295	91.7	92.8	93.3	0.86	55	2	6	2.2	58	72	**1MB15 ■ 6-2CC2 ■-■■■■**	533	1
37	**280 S**	982	360	92.2	93.5	94.2	0.85	68	1.9	6	2.1	62	76	**1MB15 ■ 6-2DC0 ■-■■■■**	689	1.34
45	**280 M**	982	440	92.7	93.7	94.1	0.86	81	2.4	6	2.2	61	76	**1MB15 ■ 6-2DC2 ■-■■■■**	748	1.63
55	**315 S**	991	530	93.1	93.7	93.8	0.8	107	1.8	6	2.1	68	84	**1MB55 ■ 6-3AC0 ■-■■■■**	1070	2.98
75	**315 M**	990	720	93.7	94.3	94.3	0.82	141	1.8	6	2.2	64	79	**1MB55 ■ 6-3AC2 ■-■■■■**	1130	3.54
132	**315 L**	988	1280	94.6	95.4	95.8	0.83	245	1.8	6	2.1	67	82	**1MB55 ■ 6-3AC7 ■-■■■■**	1670	6.41
200	**355 L**	990	1930	95	95.7	96	0.86	355	1.7	6	2	71	86	**1MB55 ■ 6-3BC2 ■-■■■■**	2630	13.8
280	**355 L**	997	2700	95	95.6	95.9	0.86	495	1.9	6	2.2	76	90	**1MB55 ■ 6-3BC4 ■-■■■■**	2650	13.5

Zones												Order code
Zone 1 (explosive gases occasionally or frequently) Ex db IIC									5			–
Zone 1 (explosive gases occasionally or frequently) Ex db IIB									6			–
Voltages							Version					Order code
50 Hz 230 VΔ/400 VY							**Standard**			2	2	–
50 Hz 400 VΔ/690 VY							**Standard**			3	4	–
50 Hz 500 VY							Without additional charge			2	7	–
50 Hz 500 VΔ							Without additional charge			4	0	–
For other voltages and more information, see from page 6/73										9	0	...
Types of construction							Version					Order code
Without flange	IM B3 [3]						**Standard**				A	–
With flange	IM B5 [3]						With additional charge				F	–
With flange	IM B14 [3]						With additional charge				K	–
For other types of construction and more information, see from page 6/84											■	...
Motor protection							Version					
Without							**Standard**					A
PTC thermistor with 3 temperature sensors							With additional charge					B
For other motor protection and more information, see from page 6/91												■
Terminal box position							Version					
Terminal box at top							**Standard**					4
For other terminal box positions and more information, see from page 6/96												■
Special versions												Order code(s)
For options, see from page 6/111								**1MB.5 ■ 6-....**		■	■■■■■ -Z	...+...+...+...

[1] Noise values for line operation under load, tolerance + 3dB(A).
[2] In combination with B43 / B44 on request.
[3] Types derived from IM B3 (IM B6/7/8, IM V6 and IM V5), from IM B5 (IM V3and IM V1) and from IM B14 (IM V19 and IM V18) are possible. The basic typeIM B3, IM B5 or IM B14 is stamped as standard on the rating plate.

© Innomotics 2024

Selection and ordering data

P_{rated}, 50 Hz	Frame size	Operating values at rated power n_{rated}, 50 Hz	T_{rated}, 50 Hz	η_{rated}, 50 Hz, 4/4	η_{rated}, 50 Hz, 3/4	η_{rated}, 50 Hz, 2/4	$\cos\varphi$ rated, 50 Hz, 4/4	I_{rated}, 50 Hz, 400 V	T_{LR}/T_{rated}	I_{LR}/I_{rated}	T_B/T_{rated}	L_{pfA}, 50 Hz 1)	L_{WA}, 50 Hz 1)	Cast-iron series 1MB15■7/1MB55■7 Article-No.	$m_{IM\ B3}$	J
kW	FS	rpm	Nm	%	%	%		A				dB(A)	dB(A)		kg	kgm²
_ Cooling: self-ventilated (IC411)																
_ Efficiency according to IEC 60034-30-1: IE3 PremiumEfficiency																
_ Line operation (DOL) 2)																
_ Starting current maximal 700% without plus tolerance																
_ Insulation: Thermal class 155 (temperature class F), utilization in accordance with thermal class 130 (temperature class B), IVIC C																
_ Standard version and stamping -20 to +40°C; increased ambient temperature can be ordered with Y50, to max. +55°C without derating.																
2-pole: 3000 rpm at 50 Hz																
0.25	**71 M**	2915	0.82	69.7	68.7	64.7	0.76	0.68	2.8	7	4.1	59	67	**1MB15 ■ 7-0CA2 ■-■■■■**	24	0.00043
0.37	**71 M**	2870	1.23	73.8	73.4	70.2	0.77	0.94	2.9	7	4	60	68	**1MB15 ■ 7-0CA3 ■-■■■■**	25	0.00053
0.55	**80 M**	2865	1.83	77.8	79	78	0.86	1.19	2.3	7	3.3	64	72	**1MB15 ■ 7-0DA2 ■-■■■■**	30	0.00108
0.75	**80 M**	2860	2.5	80.7	81.9	81.2	0.86	1.56	2.9	7	2.9	70	78	**1MB15 ■ 7-0DA3 ■-■■■■**	32	0.00138
1.1	**90 L**	2875	3.65	82.7	84.4	84.2	0.9	2.15	1.9	7	3	66	74	**1MB15 ■ 7-0EA0 ■-■■■■**	41	0.0024
1.5	**90 L**	2880	4.95	84.2	85.4	84.6	0.9	2.85	2.4	7	2.9	65	73	**1MB15 ■ 7-0EA4 ■-■■■■**	45	0.0032
2.2	**100 L**	2880	7.3	85.9	87.4	88	0.91	4.05	2.2	7	2.8	72	80	**1MB15 ■ 7-1AA4 ■-■■■■**	64	0.0048
3	**112 M**	2930	9.8	87.1	88.2	88.9	0.92	5.4	1.7	7	2.4	70	78	**1MB15 ■ 7-1BA2 ■-■■■■**	74	0.0099
4	**132 S**	2945	13	88.1	89.2	89.4	0.93	7	1.7	7	2.5	69	77	**1MB15 ■ 7-1CA0 ■-■■■■**	120	0.0278
5.5	**132 S**	2945	17.8	89.2	90.5	90.8	0.93	9.6	1.8	7	2.6	75	83	**1MB15 ■ 7-1CA1 ■-■■■■**	120	0.0278
7.5	**160 M**	2950	24.5	90.1	90.5	89.9	0.92	13.1	2.1	7	2.7	75	83	**1MB15 ■ 7-1DA2 ■-■■■■**	179	0.0532
11	**160 M**	2940	35.5	91.2	91.4	90.9	0.91	19.1	2	7	2.8	76	84	**1MB15 ■ 7-1DA3 ■-■■■■**	179	0.0532
15	**160 L**	2940	48.5	91.9	92.2	92.1	0.92	25.5	2.2	7	2.8	79	87	**1MB15 ■ 7-1DA4 ■-■■■■**	206	0.0772
18.5	**180 M**	2945	60	92.4	92.8	92.1	0.9	32	1.9	7	3	72	80	**1MB15 ■ 7-1EA2 ■-■■■■**	238	0.0889
22	**200 L**	2950	71	92.7	93.5	93	0.89	38.5	2.1	7	2.8	72	80	**1MB15 ■ 7-2AA4 ■-■■■■**	315	0.15
30	**200 L**	2950	97	93.3	93.6	93	0.9	52	2.4	7	3	79	87	**1MB15 ■ 7-2AA5 ■-■■■■**	370	0.198
37	**225 M**	2960	119	93.7	93.9	93.3	0.89	64	2.3	7	2.7	73	87	**1MB15 ■ 7-2BA2 ■-■■■■**	447	0.263
45	**250 M**	2970	145	94	94.4	94.1	0.89	78	2.1	7	2.6	75	89	**1MB15 ■ 7-2CA2 ■-■■■■**	532	0.454
55	**280 S**	2975	177	94.3	94.4	93.7	0.9	94	2.1	7	2.6	75	89	**1MB15 ■ 7-2DA0 ■-■■■■**	729	0.816
75	**280 M**	2970	240	94.7	95.1	94.8	0.9	127	2.1	7	2.6	79	93	**1MB15 ■ 7-2DA2 ■-■■■■**	763	0.924
90	**315 S**	2980	290	95	95.1	94.5	0.91	150	2	7	2.6	76	91	**1MB55 ■ 7-3AA0 ■-■■■■**	1130	1.76
110	**315 M**	2980	350	95.2	95.4	94.8	0.91	183	1.8	7	2.4	77	92	**1MB55 ■ 7-3AA2 ■-■■■■**	1290	1.99
132	**315 L**	2980	425	95.4	95.6	95.2	0.91	220	2.1	7	2.5	78	92	**1MB55 ■ 7-3AA4 ■-■■■■**	1360	2.29
160	**315 L**	2980	510	95.6	95.7	95.3	0.92	265	2.2	7	2.5	78	92	**1MB55 ■ 7-3AA5 ■-■■■■**	1490	2.65
200	**315 L**	2978	640	95.8	96.1	95.9	0.91	330	2.3	7	2.6	79	94	**1MB55 ■ 7-3AA6 ■-■■■■**	1590	2.85

Zones																	Order code
Zone 1 (explosive gases occasionally or frequently) Ex db IIC															**5**		–
Zone 1 (explosive gases occasionally or frequently) Ex db IIB															**6**		–
Voltages														Version			Order code
50 Hz 230 VΔ/400 VY														**Standard**		**2 2**	–
50 Hz 400 VΔ/690 VY														**Standard**		**3 4**	–
50 Hz 500 VY														Without additional charge		**2 7**	–
50 Hz 500 VΔ														Without additional charge		**4 0**	–
For other voltages and more information, see from page 6/73																**9 0**	...
Types of construction														Version			Order code
Without flange	IM B3 3)													**Standard**		**A**	–
With flange	IM B5 3)													With additional charge		**F**	–
With flange	IM B14 3)													With additional charge		**K**	–
For other types of construction and more information, see from page 6/84																■	...
Motor protection														Version			
Without														**Standard**		**A**	
PTC thermistor with 3 temperature sensors														With additional charge		**B**	
For other motor protection and more information, see from page 6/91																■	
Terminal box position														Version			
Terminal box at top														**Standard**		**4**	
For other terminal box positions and more information, see from page 6/96																■	
Special versions																	Order code(s)
For options, see from page 6/111														**1MB.5 ■ 7-.... ■-■■■■ -Z**			...+...+...+...

For footnotes see page 6/65

© Innomotics 2024

Innomotics XP 1MB1, 1MB5 explosion-protected motors

Cast-iron series 1MB.557/1MB.567 - self-ventilated

Selection and ordering data

P_{rated}, 50 Hz	Frame size	Operating values at rated power n_{rated}, 50 Hz	T_{rated}, 50 Hz	η_{rated}, 50 Hz, 4/4	η_{rated}, 50 Hz, 3/4	η_{rated}, 50 Hz, 2/4	$\cos\varphi$ rated, 50 Hz, 4/4	I_{rated}, 50 Hz, 400 V	T_{LR}/T_{rated}	I_{LR}/I_{rated}	T_B/T_{rated}	L_{pfA}, 50 Hz[1]	L_{WA}, 50 Hz[1]	Cast-iron series 1MB15■7/1MB55■7 Article-No.	$m_{IM\ B3}$	J
kW	FS	rpm	Nm	%	%	%		A				dB(A)	dB(A)		kg	kgm²
_ Cooling: self-ventilated (IC411)																
_ Efficiency according to IEC 60034-30-1: IE3 PremiumEfficiency																
_ Line operation (DOL)[2]																
_ Starting current maximal 700% without plus tolerance																
_ Insulation: Thermal class 155 (temperature class F), utilization in accordance with thermal class 130 (temperature class B), IVIC C																
_ Standard version and stamping -20 to +40°C; increased ambient temperature can be ordered with Y50, to max. +55°C without derating.																
4-pole: 1500 rpm at 50 Hz																
0.18	**71 M**	1410	1.22	69.9	69.9	66.8	0.72	0.52	2.3	7	2.6	57	65	**1MB15 ■ 7-0CB2 ■-■■■■**	25	0.00103
0.25	**71 M**	1430	1.67	73.5	71	65.1	0.62	0.79	3.7	7	3.8	62	70	**1MB15 ■ 7-0CB3 ■-■■■■**	27	0.00133
0.37	**80 M**	1455	2.45	77.3	77.3	74.3	0.74	0.93	3.1	7	3.7	62	70	**1MB15 ■ 7-0DB2 ■-■■■■**	30	0.00218
0.55	**80 M**	1450	3.6	80.8	80.6	78.1	0.77	1.28	2.4	7	3.1	55	63	**1MB15 ■ 7-0DB3 ■-■■■■**	33	0.00298
0.75	**90 L**	1440	5.3	82.5	83.6	82.7	0.8	1.64	2.5	7	3.6	58	66	**1MB15 ■ 7-0EB0 ■-■■■■**	42	0.0038
1.1	**90 L**	1440	7.3	84.1	85.4	84.8	0.83	2.25	2.4	7	3.1	55	63	**1MB15 ■ 7-0EB4 ■-■■■■**	45	0.005
1.5	**100 L**	1455	9.8	85.3	86.9	87	0.87	2.9	1.9	7	2.5	57	65	**1MB15 ■ 7-1AB4 ■-■■■■**	68	0.0124
2.2	**100 L**	1455	14.4	86.7	89.1	90.1	0.85	4.3	2.1	7	2.8	62	70	**1MB15 ■ 7-1AB5 ■-■■■■**	68	0.0124
3	**112 M**	1455	19.7	87.7	89	89.1	0.85	5.8	2	7	2.8	57	65	**1MB15 ■ 7-1BB2 ■-■■■■**	76	0.0146
4	**132 S**	1465	26	88.6	89.8	89.8	0.86	7.6	1.9	7	2.5	66	74	**1MB15 ■ 7-1CB0 ■-■■■■**	105	0.0352
5.5	**132 M**	1465	36	89.6	90.7	91	0.86	10.3	2	7	2.7	67	75	**1MB15 ■ 7-1CB2 ■-■■■■**	120	0.0404
7.5	**160 M**	1475	48.5	90.4	90.3	89.4	0.86	13.8	2.4	7	2.6	64	72	**1MB15 ■ 7-1DB2 ■-■■■■**	168	0.0733
11	**160 L**	1470	71	91.4	92.1	91.7	0.86	20	2.4	7	2.6	59	67	**1MB15 ■ 7-1DB4 ■-■■■■**	191	0.0877
15	**180 M**	1470	97	92.1	92.9	92.9	0.84	28	2.2	7	3	64	72	**1MB15 ■ 7-1EB2 ■-■■■■**	240	0.1445
18.5	**180 L**	1465	121	92.6	93.6	93.9	0.84	34.5	2.2	7	2.9	69	77	**1MB15 ■ 7-1EB4 ■-■■■■**	249	0.1582
22	**200 L**	1470	143	93	93.6	94.1	0.86	39.5	2.1	7	2.5	60	68	**1MB15 ■ 7-2AB5 ■-■■■■**	346	0.248
30	**225 S**	1478	194	93.6	94.3	94.4	0.86	54	2.3	7	2.3	65	80	**1MB15 ■ 7-2BB0 ■-■■■■**	449	0.469
37	**225 M**	1478	240	93.9	94.5	94.5	0.86	66	2.5	7	2.5	64	78	**1MB15 ■ 7-2BB2 ■-■■■■**	466	0.521
45	**250 M**	1480	290	94.2	94.8	94.9	0.87	79	2.1	7	2.5	67	81	**1MB15 ■ 7-2CB2 ■-■■■■**	563	0.842
55	**280 S**	1482	355	94.6	95.1	95.1	0.88	95	2.1	7	2.4	69	84	**1MB15 ■ 7-2DB0 ■-■■■■**	782	1.37
75	**280 M**	1482	485	95	95.5	95.5	0.87	131	2.3	7	2.6	73	87	**1MB15 ■ 7-2DB2 ■-■■■■**	818	1.7
90	**315 S**	1488	580	95.2	95.5	95.2	0.87	157	2.4	7	2.3	69	84	**1MB55 ■ 7-3AB0 ■-■■■■**	1150	2.48
110	**315 M**	1490	700	95.4	95.7	95.6	0.86	194	1.8	7	2.3	67	83	**1MB55 ■ 7-3AB2 ■-■■■■**	1270	2.79
132	**315 L**	1490	850	95.6	95.8	95.6	0.85	235	2.4	7	2.3	69	84	**1MB55 ■ 7-3AB4 ■-■■■■**	1330	3.17
160	**315 L**	1488	1030	95.8	96.3	96.3	0.87	275	1.8	7	2.3	67	83	**1MB55 ■ 7-3AB5 ■-■■■■**	1480	3.79
200	**315 L**	1488	1280	96	96.4	96.2	0.88	340	2	7	2.5	70	84	**1MB55 ■ 7-3AB6 ■-■■■■**	1660	4.57
250	**355 L**	1490	1600	96	96.3	96	0.88	425	1.8	7	2.4	76	91	**1MB55 ■ 7-3BB2 ■-■■■■**	2140	5.6
315	**355 L**	1490	2000	96	96.3	96.2	0.89	530	1.9	7	2.4	78	93	**1MB55 ■ 7-3BB4 ■-■■■■**	2420	7.02
355	**355 L**	1490	2300	96	96.4	96.3	0.85	630	1.8	7	2.6	75	91	**1MB55 ■ 7-3BB5 ■-■■■■**	2720	8.48

Zones											Order code
Zone 1 (explosive gases occasionally or frequently) Ex db IIC								**5**			–
Zone 1 (explosive gases occasionally or frequently) Ex db IIB								**6**			–
Voltages							Version				Order code
50 Hz 230 VΔ/400 VY							**Standard**		**2**	**2**	–
50 Hz 400 VΔ/690 VY							**Standard**		**3**	**4**	–
50 Hz 500 VY							Without additional charge		**2**	**7**	–
50 Hz 500 VΔ							Without additional charge		**4**	**0**	–
For other voltages and more information, see from page 6/73									**9**	**0**	**...**
Types of construction							Version				Order code
Without flange	IM B3[3]						**Standard**			**A**	–
With flange	IM B5[3]						With additional charge			**F**	–
With flange	IM B14[3]						With additional charge			**K**	–
For other types of construction and more information, see from page 6/84										■	**...**
Motor protection							Version				
Without							**Standard**			**A**	
PTC thermistor with 3 temperature sensors							With additional charge			**B**	
For other motor protection and more information, see from page 6/91										■	
Terminal box position							Version				
Terminal box at top							**Standard**			**4**	
For other terminal box positions and more information, see from page 6/96										■	
Special versions											Order code(s)
For options, see from page 6/111								**1MB.5 ■ 7-....**		**■ ■■■■ -Z**	**...+...+...+...**

For footnotes see page 6/65

© Innomotics 2024

Selection and ordering data

P_{rated}, 50 Hz	Frame size	Operating values at rated power n_{rated}, 50 Hz	T_{rated}, 50 Hz	η_{rated}, 50 Hz, 4/4	η_{rated}, 50 Hz, 3/4	η_{rated}, 50 Hz, 2/4	$\cos\varphi$ rated, 50 Hz, 4/4	I_{rated}, 50 Hz, 400 V	T_{LR}/T_{rated}	I_{LR}/I_{rated}	T_B/T_{rated}	L_{pfA}, 50 Hz[1]	L_{WA}, 50 Hz[1]	Cast-iron series 1MB15■7/1MB55■7 Article-No.	$m_{IM\ B3}$	J
kW	FS	rpm	Nm	%	%	%		A				dB(A)	dB(A)		kg	kgm²
_ Cooling: self-ventilated (IC411)																
_ Efficiency according to IEC 60034-30-1: IE3 PremiumEfficiency																
_ Line operation (DOL) [2]																
_ Starting current maximal 700% without plus tolerance																
_ Insulation: Thermal class 155 (temperature class F), utilization in accordance with thermal class 130 (temperature class B), IVIC C																
_ Standard version and stamping -20 to +40°C; increased ambient temperature can be ordered with Y50, to max. +55°C without derating.																
6-pole: 1000 rpm at 50 Hz																
0.12	**71 M**	935	1.23	57.7	54.8	48	0.57	0.53	3	7	3.4	61	69	**1MB15 ■ 7-0CC2 ■-■■■■**	24	0.00103
0.18	**71 M**	925	1.86	63.9	62	56.2	0.59	0.69	3.6	7	3.7	53	61	**1MB15 ■ 7-0CC3 ■-■■■■**	26	0.00143
0.25	**80 M**	965	2.45	68.6	65.9	60	0.53	0.99	3.8	7	4.2	59	67	**1MB15 ■ 7-0DC2 ■-■■■■**	31	0.00248
0.37	**80 M**	965	3.65	73.5	71.3	65.9	0.52	1.4	3.5	7	4.9	61	69	**1MB15 ■ 7-0DC3 ■-■■■■**	34	0.00308
0.55	**90 L**	955	5.5	77.2	78.2	76	0.7	1.47	2.1	7	2.6	58	66	**1MB15 ■ 7-0EC0 ■-■■■■**	43	0.0041
0.75	**100 L**	975	7.3	78.9	79.1	77.2	0.69	1.99	2.3	7	2.7	61	69	**1MB15 ■ 7-1AC3 ■-■■■■**	67	0.0104
1.1	**112 M**	975	10.8	81	80.8	78.6	0.73	2.7	2	7	2.8	57	65	**1MB15 ■ 7-1BC1 ■-■■■■**	75	0.0199
1.5	**132 S**	975	14.7	82.5	82.5	81	0.76	3.45	1.8	7	2.9	54	62	**1MB15 ■ 7-1CC1 ■-■■■■**	98	0.0348
2.2	**132 S**	975	21.5	84.3	84.6	83	0.75	5	1.8	7	2.8	53	61	**1MB15 ■ 7-1CC0 ■-■■■■**	98	0.0348
3	**132 M**	975	29.5	85.6	88	87.6	0.74	6.8	2.1	7	2.9	65	73	**1MB15 ■ 7-1CC2 ■-■■■■**	98	0.0348
4	**132 M**	965	39.5	86.8	87.6	86.9	0.75	8.9	2.3	7	3	64	72	**1MB15 ■ 7-1CC3 ■-■■■■**	98	0.0348
5.5	**160 M**	980	54	88	89.2	89.3	0.83	10.9	1.8	7	2.6	59	67	**1MB15 ■ 7-1DC2 ■-■■■■**	184	0.136
7.5	**160 L**	980	73	89.1	90	89.5	0.8	15.2	2.1	7	2.4	62	70	**1MB15 ■ 7-1DC4 ■-■■■■**	184	0.136
11	**180 L**	975	108	90.3	91.1	91.1	0.79	22.5	1.9	7	3.3	60	68	**1MB15 ■ 7-1EC4 ■-■■■■**	236	0.21
15	**200 L**	980	146	91.2	91.8	91.6	0.78	30.5	2.2	7	3.1	60	68	**1MB15 ■ 7-2AC4 ■-■■■■**	325	0.315
18.5	**200 L**	980	180	91.7	92.2	92	0.77	38	2.6	7	3.2	65	73	**1MB15 ■ 7-2AC5 ■-■■■■**	339	0.352
22	**225 M**	980	215	92.2	93	93	0.83	41.5	2.3	7	2.6	62	76	**1MB15 ■ 7-2BC2 ■-■■■■**	458	0.671
30	**250 M**	982	290	92.9	93.8	93.9	0.85	55	2.3	7	2.5	58	72	**1MB15 ■ 7-2CC2 ■-■■■■**	533	1
37	**280 S**	985	360	93.3	94.4	94.7	0.85	67	2.2	7	2.4	62	76	**1MB15 ■ 7-2DC0 ■-■■■■**	689	1.34
45	**280 M**	986	435	93.7	94.5	94.6	0.86	81	2.7	7	2.5	61	76	**1MB15 ■ 7-2DC2 ■-■■■■**	748	1.63
55	**315 S**	992	530	94.1	94.5	94.3	0.82	103	2.1	7	2.5	68	84	**1MB55 ■ 7-3AC0 ■-■■■■**	1070	2.98
75	**315 M**	991	720	94.6	95.1	95	0.82	140	2	7	2.4	64	79	**1MB55 ■ 7-3AC2 ■-■■■■**	1130	3.54
160	**315 L**	990	1540	95.6	96.2	96.5	0.81	300	2.1	7	2.5	67	82	**1MB55 ■ 7-3AC7 ■-■■■■**	1670	6.41
250	**355 L**	992	2400	95.8	96.3	96.3	0.86	440	2.2	7	2.6	71	86	**1MB55 ■ 7-3BC2 ■-■■■■**	2630	13.8
315	**355 L**	992	3050	95.8	96.3	96.5	0.83	570	2.3	7	2.6	76	90	**1MB55 ■ 7-3BC4 ■-■■■■**	2650	13.5

Zones																Order code
Zone 1 (explosive gases occasionally or frequently) Ex db IIC														5		–
Zone 1 (explosive gases occasionally or frequently) Ex db IIB														6		–
Voltages													Version			Order code
50 Hz 230 VΔ/400 VY													**Standard**		2 2	–
50 Hz 400 VΔ/690 VY													**Standard**		3 4	–
50 Hz 500 VY													Without additional charge		2 7	–
50 Hz 500 VΔ													Without additional charge		4 0	–
For other voltages and more information, see from page 6/73															9 0	...
Types of construction													Version			Order code
Without flange	IM B3 [3]												**Standard**		A	–
With flange	IM B5 [3]												With additional charge		F	–
With flange	IM B14 [3]												With additional charge		K	–
For other types of construction and more information, see from page 6/84															■	...
Motor protection													Version			
Without													**Standard**		A	
PTC thermistor with 3 temperature sensors													With additional charge		B	
For other motor protection and more information, see from page 6/91															■	
Terminal box position													Version			
Terminal box at top													**Standard**		4	
For other terminal box positions and more information, see from page 6/96															■	
Special versions																Order code(s)
For options, see from page 6/111														**1MB.5 ■ 7-....**	**■ ■■■■ -Z**	...+...+...+...

[1] Noise values for line operation under load, tolerance + 3dB(A).
[2] In combination with B43 / B44 on request.
[3] Types derived from IM B3 (IM B6/7/8, IM V6 and IM V5), from IM B5 (IM V3and IM V1) and from IM B14 (IM V19 and IM V18) are possible. The basic type IM B3, IM B5 or IM B14 is stamped as standard on the rating plate.

© Innomotics 2024

Innomotics XP 1MB1, 1MB5 explosion-protected motors

Cast-iron series 1MB.853/1MB.863 - self-ventilated

Selection and ordering data

P_{rated}, 50 Hz	Frame size	Operating values at rated power n_{rated}, 50 Hz	T_{rated}, 50 Hz	η_{rated}, 50 Hz, 4/4	η_{rated}, 50 Hz, 3/4	η_{rated}, 50 Hz, 2/4	$\cos\varphi$ rated, 50 Hz, 4/4	I_{rated}, 50 Hz, 400 V	T_{LR}/T_{rated}	I_{LR}/I_{rated}	T_B/T_{rated}	L_{pfA}, 50 Hz[1]	L_{WA}, 50 Hz[1]	Cast-iron series 1MB18■3/1MB58■3 Article-No.	$m_{IM\ B3}$	J
kW	FS	rpm	Nm	%	%	%		A				dB(A)	dB(A)		kg	kgm²
_ Cooling: self-ventilated (IC411)																
_ Efficiency according to IEC 60034-30-1: IE3 Premium Efficiency																
_ Insulation: Thermal class 155 (temperature class F), utilization in accordance with thermal class 130 (temperature class B), IVIC C																
_ Optionally for converter operation up to U_{line} 690 V - IVIC-C premium insulation system																
2-pole: 3000 rpm at 50 Hz, 3600 rpm at60 Hz																
3	**100 L**	2920	9.8	87.1	87.9	87.5	0.88	5.6	3.2	8.1	4.2	74	82	**1MB18 ■ 3-1AA4 ■-■■■■**	64	0.0048
4	**112 M**	2950	12.9	88.1	88.7	88.2	0.89	7.4	2.5	9.2	3.4	69	81	**1MB18 ■ 3-1BA2 ■-■■■■**	74	0.0099
5.5	**132 S**	2960	17.7	89.2	89.6	88.9	0.91	9.8	2.1	9.7	3.6	72	79	**1MB18 ■ 3-1CA0 ■-■■■■**	106	0.0201
7.5	**132 S**	2950	24.5	90.1	90.9	90.7	0.91	13.2	2.1	9	3.3	68	80	**1MB18 ■ 3-1CA1 ■-■■■■**	106	0.0272
11	**160 M**	2955	35.5	91.2	91.5	90.7	0.9	19.3	2.5	8.5	3.4	79	86	**1MB18 ■ 3-1DA2 ■-■■■■**	179	0.0457
15	**160 M**	2960	48.5	91.9	91.9	91	0.86	27.5	2.8	9.5	4	70	82	**1MB18 ■ 3-1DA3 ■-■■■■**	179	0.0532
18.5	**160 L**	2960	60	92.4	92.9	92.6	0.92	31.5	2.8	9.7	3.8	78	85	**1MB18 ■ 3-1DA4 ■-■■■■**	206	0.0637
22	**180 M**	2950	71	92.7	93	92.4	0.89	38.5	2.3	7.5	3.5	67	80	**1MB18 ■ 3-1EA2 ■-■■■■**	238	0.0889
30	**200 L**	2955	97	93.3	93.6	93.3	0.86	54	2.6	7.5	3.3	68	81	**1MB18 ■ 3-2AA4 ■-■■■■**	315	0.15
37	**200 L**	2950	120	93.7	93.9	93.5	0.88	65	2.6	7.8	3.4	68	81	**1MB18 ■ 3-2AA5 ■-■■■■**	348	0.178
45	**225 M**	2960	145	94	94.4	94.1	0.88	79	2.5	7.4	2.9	73	87	**1MB18 ■ 3-2BA2 ■-■■■■**	447	0.263
55	**250 M**	2975	177	94.3	94.6	94.2	0.88	96	2.4	7.3	3	73	87	**1MB18 ■ 3-2CA2 ■-■■■■**	532	0.454
75	**280 S**	2970	240	94.7	95.1	94.9	0.9	127	2.5	7.2	2.8	79	93	**1MB18 ■ 3-2DA0 ■-■■■■**	729	0.816
85	**280 M**	2970	275	94.9	95.2	94.8	0.89	145	2.7	8.5	3.3	79	93	**1MB18 ■ 3-2DA2 ■-■■■■**	763	0.924
110	**315 S**	2982	350	95.2	95.3	94.8	0.91	183	2.8	8	3	77	92	**1MB58 ■ 3-3AA0 ■-■■■■**	1130	1.76
132	**315 M**	2982	425	95.4	95.5	94.9	0.91	220	2.3	7.5	2.9	77	92	**1MB58 ■ 3-3AA2 ■-■■■■**	1290	1.99
160	**315 L**	2982	510	95.6	95.8	95.4	0.9	270	2.2	7.2	2.7	78	92	**1MB58 ■ 3-3AA4 ■-■■■■**	1360	2.29
200	**315 L**	2980	640	95.8	96	95.8	0.92	330	2.3	6.8	2.6	83	98	**1MB58 ■ 3-3AA5 ■-■■■■**	1490	2.65
240	**315 L**	2982	770	95.8	96	95.8	0.91	395	2.7	8	3.1	80	94	**1MB58 ■ 3-3AA6 ■-■■■■**	1590	2.85
315	**355 L**	2986	1010	95.8	96	95.7	0.9	530	2	7.7	3	83	98	**1MB58 ■ 3-3BA2 ■-■■■■**	1830	4.31
355	**355 L**	2986	1140	95.8	95.9	95.6	0.89	600	2.1	8.2	3	83	98	**1MB58 ■ 3-3BA3 ■-■■■■**	2620	5.84
400	**355 L**	2986	1280	95.8	96	95.8	0.92	660	2.1	7.6	3	83	98	**1MB58 ■ 3-3BA4 ■-■■■■**	2610	5.89
450	**355 L**	2990	1440	95.8	95.8	95.3	0.88	770	2.9	10	4.3	83	98	**1MB58 ■ 3-3BA5 ■-■■■■**	2620	5.89

Zones								Order code
Zone 1 (explosive gases occasionally or frequently) Ex db IIC			**5**					–
Zone 1 (explosive gases occasionally or frequently) Ex db IIB			**6**					–
Voltages		Version						Order code
50 Hz 230 VΔ/400 VY	60 Hz 460 VY	**Standard**			**2**	**2**		–
50 Hz 400 VΔ/690 VY	60 Hz 460 VΔ	**Standard**			**3**	**4**		–
50 Hz 500 VY		Without additional charge			**2**	**7**		–
50 Hz 500 VΔ		Without additional charge			**4**	**0**		–
50 Hz 690 VY	50 Hz power							**M4E**
50 Hz 690 VΔ	50 Hz power							**M4F**
For other voltages and more information, see from page 6/73					**9**	**0**		**...**
Types of construction		Version						Order code
Without flange	IM B3 [2]	**Standard**				**A**		–
With flange	IM B5 [2]	With additional charge				**F**		–
With flange	IM B14 [2]	With additional charge				**K**		–
For other types of construction and more information, see from page 6/84						■		**...**
Motor protection		Version						
Without		**Standard**					**A**	
PTC thermistor with 3 temperature sensors		With additional charge					**B**	
For other motor protection and more information, see from page 6/91							■	
Terminal box position		Version						
Terminal box at top		**Standard**						**4**
For other terminal box positions and more information, see from page 6/96								■
Special versions								Order code(s)
For options, see from page 6/111			**1MB.8 ■ 3- . . . .**		■	■■■■■	**-Z**	**...+...+...+...**

For footnotes see page 6/69

© Innomotics 2024

Selection and ordering data

P_{rated}, 50 Hz	Frame size	Operating values at rated power n_{rated}, 50 Hz	T_{rated}, 50 Hz	η_{rated}, 50 Hz, 4/4	η_{rated}, 50 Hz, 3/4	η_{rated}, 50 Hz, 2/4	$\cos\varphi$ rated, 50 Hz, 4/4	I_{rated}, 50 Hz, 400 V	T_{LR}/T_{rated}	I_{LR}/I_{rated}	T_B/T_{rated}	L_{pfA}, 50 Hz[1]	L_{WA}, 50 Hz[1]	Cast-iron series 1MB18■3/1MB58■3 Article-No.	$m_{IM\ B3}$	J
kW	FS	rpm	Nm	%	%	%		A				dB(A)	dB(A)		kg	kgm²
_ Cooling: self-ventilated (IC411)																
_ Efficiency according to IEC 60034-30-1: IE3 Premium Efficiency																
_ Insulation: Thermal class 155 (temperature class F), utilization in accordance with thermal class 130 (temperature class B), IVIC C																
_ Optionally for converter operation up to U_{line} 690 V - IVIC-C premium insulation system																
4-pole: 1500 min-1 bei 50 Hz, 1800 min-1 bei 60 Hz																
2.2	**100 L**	1465	14.3	86.7	87	85.9	0.83	4.4	2.5	9.2	3.8	60	72	**1MB18 ■ 3-1AB4 ■-■■■■**	68	0.0124
3	**100 L**	1460	19.6	87.7	88.4	87.8	0.84	5.9	2.4	8.5	3.4	68	75	**1MB18 ■ 3-1AB5 ■-■■■■**	73	0.0124
4	**112 M**	1460	26	88.6	89.2	88.6	0.82	7.9	2.4	7.1	3.7	58	70	**1MB18 ■ 3-1BB2 ■-■■■■**	76	0.0146
5.5	**132 S**	1470	35.5	89.6	90.1	89.7	0.82	10.8	2.5	8.3	3.6	64	76	**1MB18 ■ 3-1CB0 ■-■■■■**	105	0.0352
7.5	**132 M**	1465	49	90.4	91.1	90.8	0.84	14.3	2.5	8.1	3.3	64	76	**1MB18 ■ 3-1CB2 ■-■■■■**	120	0.0404
11	**160 M**	1475	71	91.4	91.8	91.2	0.84	20.5	2.3	7.2	3	65	77	**1MB18 ■ 3-1DB2 ■-■■■■**	168	0.0733
15	**160 L**	1480	97	92.1	92.4	92	0.85	27.5	2.9	8.1	3.3	67	74	**1MB18 ■ 3-1DB4 ■-■■■■**	202	0.0877
18.5	**180 M**	1470	120	92.6	93.1	93	0.82	35	2.7	8	3.5	66	73	**1MB18 ■ 3-1EB2 ■-■■■■**	240	0.1445
22	**180 L**	1470	143	93	93.4	93.1	0.82	41.5	2.6	7.7	3.3	62	75	**1MB18 ■ 3-1EB4 ■-■■■■**	249	0.1582
30	**200 L**	1470	195	93.6	94.3	94.5	0.84	55	2.6	7.3	3.1	59	72	**1MB18 ■ 3-2AB5 ■-■■■■**	346	0.248
37	**225 M**	1484	240	93.9	94.2	93.8	0.85	67	3.1	8.2	3.2	64	78	**1MB18 ■ 3-2BB2 ■-■■■■**	466	0.521
45	**250 M**	1486	290	94.2	94.6	94.3	0.85	81	2.6	7.9	3.1	66	79	**1MB18 ■ 3-2CB2 ■-■■■■**	563	0.842
55	**280 S**	1486	355	94.6	94.9	94.7	0.87	96	2.5	7.8	2.9	72	86	**1MB18 ■ 3-2DB0 ■-■■■■**	782	1.37
75	**280 M**	1486	480	95	95.4	95.3	0.88	129	2.4	7.2	2.7	70	84	**1MB18 ■ 3-2DB2 ■-■■■■**	818	1.7
90	**315 S**	1490	580	95.2	95.5	95.3	0.86	159	2.2	6.8	2.4	67	82	**1MB58 ■ 3-3AB0 ■-■■■■**	1150	2.48
110	**315 M**	1490	700	95.4	95.8	95.6	0.86	194	2	7	2.5	75	91	**1MB58 ■ 3-3AB2 ■-■■■■**	1270	2.79
132	**315 L**	1491	850	95.6	95.9	95.8	0.85	235	2.2	7.9	2.8	75	91	**1MB58 ■ 3-3AB4 ■-■■■■**	1330	3.17
160	**315 L**	1491	1020	95.8	96.1	96	0.86	280	2.3	8.2	2.9	75	91	**1MB58 ■ 3-3AB5 ■-■■■■**	1480	3.79
200	**315 L**	1491	1280	96	96.2	95.9	0.86	345	2.4	8.1	2.8	75	91	**1MB58 ■ 3-3AB6 ■-■■■■**	1660	4.57
250	**355 L**	1492	1600	96	96.2	95.8	0.88	425	2.1	7.7	3.1	75	91	**1MB58 ■ 3-3BB2 ■-■■■■**	2140	5.6
315	**355 L**	1491	2000	96	96.2	95.9	0.88	540	2	7.5	2.8	81	95	**1MB58 ■ 3-3BB3 ■-■■■■**	2240	6.3
355	**355 L**	1490	2300	96	96.3	96.1	0.88	610	1.9	7.1	2.8	80	95	**1MB58 ■ 3-3BB4 ■-■■■■**	2420	7.02

Zones									Order code
Zone 1 (explosive gases occasionally or frequently) Ex db IIC					**5**				–
Zone 1 (explosive gases occasionally or frequently) Ex db IIB					**6**				–
Voltages			Version						Order code
50 Hz 230 VΔ/400 VY	60 Hz 460 VY		**Standard**			**2**	**2**		–
50 Hz 400 VΔ/690 VY	60 Hz 460 VΔ		**Standard**			**3**	**4**		–
50 Hz 500 VY			Without additional charge			**2**	**7**		–
50 Hz 500 VΔ			Without additional charge			**4**	**0**		–
50 Hz 690 VY	50 Hz power								**M4E**
50 Hz 690 VΔ	50 Hz power								**M4F**
For other voltages and more information, see from page 6/73						**9**	**0**		**...**
Types of construction			Version						Order code
Without flange	IM B3 [2]		**Standard**				**A**		–
With flange	IM B5 [2]		With additional charge				**F**		–
With flange	IM B14 [2]		With additional charge				**K**		–
For other types of construction and more information, see from page 6/84							■		**...**
Motor protection			Version						
Without			**Standard**					**A**	
PTC thermistor with 3 temperature sensors			With additional charge					**B**	
For other motor protection and more information, see from page 6/91								■	
Terminal box position			Version						
Terminal box at top			**Standard**					**4**	
For other terminal box positions and more information, see from page 6/96								■	
Special versions									Order code(s)
For options, see from page 6/111				**1MB.8 ■ 3- . . . .**		■	■■■■	**-Z**	**...+...+...+...**

6

For footnotes see page 6/69

© Innomotics 2024

Innomotics XP 1MB1, 1MB5 explosion-protected motors

IE3

Cast-iron series 1MB.853/1MB.863 - self-ventilated

Selection and ordering data

P_{rated}, 50 Hz	Frame size	Operating values at rated power n_{rated}, 50 Hz	T_{rated}, 50 Hz	η_{rated}, 50 Hz, 4/4	η_{rated}, 50 Hz, 3/4	η_{rated}, 50 Hz, 2/4	$\cos\varphi$ rated, 50 Hz, 4/4	I_{rated}, 50 Hz, 400 V	T_{LR}/T_{rated}	I_{LR}/I_{rated}	T_B/T_{rated}	L_{pfA}, 50 Hz[1]	L_{WA}, 50 Hz[1]	Cast-iron series 1MB18■3/1MB58■3 Article-No.	$m_{IM\ B3}$	J
kW	FS	rpm	Nm	%	%	%		A				dB(A)	dB(A)		kg	kgm²
_ Cooling: self-ventilated (IC411)																
_ Efficiency according to IEC 60034-30-1: IE3 Premium Efficiency																
_ Insulation: Thermal class 155 (temperature class F), utilization in accordance with thermal class 130 (temperature class B), IVIC C																
_ Optionally for converter operation up to U_{line} 690 V - IVIC-C premium insulation system																
6-pole: 1000 rpm at 50 Hz, 1200 rpm at 60 Hz																
15	**180 L**	975	147	91.2	91.6	91.2	0.77	31	2.3	6.4	3	55	68	**1MB18 ■ 3-1EC4 ■-■■■■**	236	0.21
18,5	**200 L**	978	181	91.7	92.1	91.9	0.79	37	2.5	5.6	2.6	58	71	**1MB18 ■ 3-2AC4 ■-■■■■**	325	0.315
22	**200 L**	978	215	92.2	93.3	93.5	0.79	43.5	2.5	5.6	2.6	55	68	**1MB18 ■ 3-2AC5 ■-■■■■**	339	0.352
25	**225 M**	986	240	92.5	92.8	92.1	0.8	49	3.1	8.4	3.4	64	77	**1MB18 ■ 3-2BC2 ■-■■■■**	458	0.671
30	**250 M**	986	290	92.9	93.5	93.4	0.83	56	2.7	7.9	3	58	72	**1MB18 ■ 3-2CC2 ■-■■■■**	533	1
37	**280 S**	988	360	93.3	94	94	0.84	68	2.7	8.2	2.9	60	75	**1MB18 ■ 3-2DC0 ■-■■■■**	689	1.34
45	**280 M**	988	435	93.7	94.2	94	0.85	82	3.2	7.9	3	60	74	**1MB18 ■ 3-2DC2 ■-■■■■**	748	1.63
55	**315 S**	992	530	94.1	94.6	94.4	0.81	104	2	6.5	2.5	68	83	**1MB58 ■ 3-3AC0 ■-■■■■**	1070	2.98
75	**315 M**	992	720	94.6	95	94.7	0.83	138	2.2	6.9	2.6	68	83	**1MB58 ■ 3-3AC2 ■-■■■■**	1130	3.54
90	**315 L**	992	870	94.9	95.4	95.3	0.83	165	2.1	6.9	2.5	68	83	**1MB58 ■ 3-3AC4 ■-■■■■**	1320	4.25
110	**315 L**	992	1060	95.1	95.4	95.2	0.83	200	2.1	7.1	2.5	68	83	**1MB58 ■ 3-3AC5 ■-■■■■**	1380	4.89
132	**315 L**	991	1270	95.4	96	96.1	0.84	240	2.1	6.6	2.4	73	88	**1MB58 ■ 3-3AC6 ■-■■■■**	1520	5.74
160	**315 L**	992	1540	95.6	96	95.9	0.82	295	2.6	7.6	2.9	68	83	**1MB58 ■ 3-3AC7 ■-■■■■**	1670	6.41
200	**355 L**	992	1930	95.8	96.2	96.1	0.88	340	2	6.4	2.4	76	91	**1MB58 ■ 3-3BC1 ■-■■■■**	2360	11.3
250	**355 L**	992	2400	95.8	96.3	96.4	0.87	435	2.2	6.6	2.5	75	90	**1MB58 ■ 3-3BC2 ■-■■■■**	2630	13.8
315	**355 L**	992	3050	95.8	96.1	96.1	0.86	550	2.2	6.6	2.5	75	90	**1MB58 ■ 3-3BC3 ■-■■■■**	2650	13.8
355	**355 L**	994	3400	95.8	96.1	95.9	0.84	640	2.9	8.2	3.2	75	90	**1MB58 ■ 3-3BC4 ■-■■■■**	2650	13.5

Zones												Order code
Zone 1 (explosive gases occasionally or frequently) Ex db IIC									**5**			–
Zone 1 (explosive gases occasionally or frequently) Ex db IIB									**6**			–
Voltages				Version								Order code
50 Hz 230 VΔ/400 VY	60 Hz 460 VY			**Standard**				**2**		**2**		–
50 Hz 400 VΔ/690 VY	60 Hz 460 VΔ			**Standard**				**3**		**4**		–
50 Hz 500 VY				Without additional charge				**2**		**7**		–
50 Hz 500 VΔ				Without additional charge				**4**		**0**		–
50 Hz 690 VY	50 Hz power											**M4E**
50 Hz 690 VΔ	50 Hz power											**M4F**
For other voltages and more information, see from page 6/73								**9**		**0**		**...**
Types of construction				Version								Order code
Without flange	IM B3 [2]			**Standard**						**A**		–
With flange	IM B5 [2]			With additional charge						**F**		–
With flange	IM B14 [2]			With additional charge						**K**		–
For other types of construction and more information, see from page 6/84										■		**...**
Motor protection				Version								
Without				**Standard**							**A**	
PTC thermistor with 3 temperature sensors				With additional charge							**B**	
For other motor protection and more information, see from page 6/91											■	
Terminal box position				Version								
Terminal box at top				**Standard**								**4**
For other terminal box positions and more information, see from page 6/96												■
Special versions												Order code(s)
For options, see from page 6/111								**1MB.8 ■ 3- . . . .**	■	· ■	■ ■ ■ -Z	**. . .+. . .+. . .+. . .**

Fußnoten siehe Seite 6/69

© Innomotics 2024

Selection and ordering data

P_{rated}, 50 Hz	Frame size	Operating values at rated power n_{rated}, 50 Hz	T_{rated}, 50 Hz	η_{rated}, 50 Hz, 4/4	η_{rated}, 50 Hz, 3/4	η_{rated}, 50 Hz, 2/4	$\cos\varphi$ rated, 50 Hz, 4/4	I_{rated}, 50 Hz, 400 V	T_{LR}/T_{rated}	I_{LR}/I_{rated}	T_B/T_{rated}	L_{pfA}, 50 Hz[1]	L_{WA}, 50 Hz[1]	Cast-iron series 1MB18■3/1MB58■3 Article-No.	$m_{IM\ B3}$	J
kW	FS	rpm	Nm	%	%	%		A				dB(A)	dB(A)		kg	kgm²
_ Cooling: self-ventilated (IC411)																
_ Efficiency according to IEC 60034-30-1: IE3 Premium Efficiency																
_ Insulation: Thermal class 155 (temperature class F), utilization in accordance with thermal class 130 (temperature class B), IVIC C																
_ Optionally for converter operation up to U_{line} 690 V - IVIC-C premium insulation system																
8-pole: 750 rpm at 50 Hz, 900 rpm at 60 Hz																
11	**180 L**	725	145	88.6	89.5	89.2	0.74	24	2.1	5.4	2.6	62	75	**1MB18 ■ 3-1ED4 ■-■■■■**	259	0.264
15	**200 L**	730	196	89.6	89.8	89.1	0.73	33	3	6.8	3.7	57	70	**1MB18 ■ 3-2AD5 ■-■■■■**	357	0.417
18,5	**225 S**	736	240	90.1	91	90.7	0.74	40	2.5	6.5	3.1	56	70	**1MB18 ■ 3-2BD0 ■-■■■■**	417	0.499
22	**225 M**	736	285	90.6	91.3	90.7	0.73	48	2.9	7	3.4	56	70	**1MB18 ■ 3-2BD2 ■-■■■■**	425	0.547
28	**250 M**	736	365	91.2	92.1	92	0.78	57	2.7	7	3.1	60	74	**1MB18 ■ 3-2CD2 ■-■■■■**	512	0.842
37	**280 S**	736	480	91.8	92.8	92.9	0.79	74	2.2	5.5	2.3	63	77	**1MB18 ■ 3-2DD0 ■-■■■■**	680	1.08
45	**280 M**	738	580	92.2	93.2	93.5	0.81	87	2.3	6	2.4	65	79	**1MB18 ■ 3-2DD2 ■-■■■■**	743	1.62
55	**315 S**	744	710	92.5	92.9	92.5	0.81	106	2.4	6.4	2.6	67	82	**1MB58 ■ 3-3AD0 ■-■■■■**	1020	3.15
75	**315 M**	742	970	93.1	93.5	93.2	0.79	147	2.5	6.4	2.5	67	82	**1MB58 ■ 3-3AD2 ■-■■■■**	1090	3.15
90	**315 L**	742	1160	93.4	94	93.9	0.82	170	2.5	6.6	2.7	67	82	**1MB58 ■ 3-3AD4 ■-■■■■**	1290	4.49
110	**315 L**	742	1420	93.7	94.2	94.1	0.81	210	2.5	6.7	2.6	67	82	**1MB58 ■ 3-3AD5 ■-■■■■**	1290	4.49
132	**315 L**	743	1700	94	94.3	93.9	0.78	260	2.9	7.3	2.9	56	70	**1MB58 ■ 3-3AD6 ■-■■■■**	1370	5.15
150	**315 L**	742	1930	94.2	94.8	94.8	0.78	295	2.6	6.8	2.8	67	82	**1MB58 ■ 3-3AD7 ■-■■■■**	1650	6.77
200	**355 L**	744	2550	94.6	95.1	95.1	0.8	380	2.3	7.1	2.7	73	88	**1MB58 ■ 3-3BD0 ■-■■■■**	2340	11.3
250	**355 L**	744	3200	94.6	95.1	95.1	0.8	475	2.4	7.2	2.9	73	88	**1MB58 ■ 3-3BD1 ■-■■■■**	2650	13.8
280	**355 L**	745	3600	94.6	94.8	94.4	0.77	550	3.4	8.3	3.2	73	88	**1MB58 ■ 3-3BD2 ■-■■■■**	2630	13.8

Zones										Order code
Zone 1 (explosive gases occasionally or frequently) Ex db IIC								**5**		–
Zone 1 (explosive gases occasionally or frequently) Ex db IIB								**6**		–
Voltages					Version					Order code
50 Hz 230 VΔ/400 VY	60 Hz 460 VY				**Standard**		**2**	**2**		–
50 Hz 400 VΔ/690 VY	60 Hz 460 VΔ				**Standard**		**3**	**4**		–
50 Hz 500 VY					Without additional charge		**2**	**7**		–
50 Hz 500 VΔ					Without additional charge		**4**	**0**		–
50 Hz 690 VYVΔ	50 Hz power									**M4E**
50 Hz 690 VΔ	50 Hz power									**M4F**
For other voltages and more information, see from page 6/73							**9**	**0**		**...**
Types of construction					Version					Order code
Without flange	IM B3 [2]				**Standard**			**A**		–
With flange	IM B5 [2]				With additional charge			**F**		–
With flange	IM B14 [2]				With additional charge			**K**		–
For other types of construction and more information, see from page 6/84								■		**...**
Motor protection					Version					
Without					**Standard**				**A**	
PTC thermistor with 3 temperature sensors					With additional charge				**B**	
For other motor protection and more information, see from page 6/91									■	
Terminal box position					Version					
Terminal box at top					**Standard**					**4**
For other terminal box positions and more information, see from page 6/96										■
Special versions										Order code(s)
For options, see from page 6/111						**1MB.8 ■ 3- . . . .**	**■**	**■ ■ ■ ■ ■**	**-Z**	**. . .+. . .+. . .+. . .**

6

[1] Noise values for line operation under load, tolerance + 3dB(A).

[2] Types derived from IM B3 (IM B6/7/8, IM V6 and IM V5), from IM B5 (IM V3and IM V1) and from IM B14 (IM V19 and IM V18) are possible. The basic type IM B3, IM B5 or IM B14 is stamped as standard on the rating plate.

© Innomotics 2024

Innomotics XP 1MB1, 1MB5 explosion-protected motors

Aluminum series 1MB10

Selection and ordering data

Voltages	Article No. supplement: Voltage code 12th and 13th position of the Article No.		Additional identification code with order code and plain text if required	Frame size 63	71	80	90	100	112	132	160	Motor version		
						1MB10.3						IEC	Ex tb (Zone 21), Ex tc (Zone 22), Ex ec (Zone 2)	IE3
				1MB10.1										IE2
								1MB10.2						IE1
1MB10 . . -	■ -	■ . . .	Order code											
Voltage at 50 Hz or 60 Hz (50 Hz power)														
50 Hz 230 VΔ/400 VY, 60 Hz 460 VY	2	2	–	☐	☐	☐	☐	☐	☐	☐	☐			
50 Hz 400 VΔ/690 VY, 60 Hz 460 VΔ	3	4	–	☐	☐	☐	☐	☐	☐	☐	☐			
50 Hz 500 VY	2	7	–	○	○	○	○	○	○	○	○			
50 Hz 500 VΔ	4	0	–	○	✓	✓	✓	○	○	○	○			
50 Hz 220 VΔ/380 VY, 60 Hz 440 VY	2	1	–	✓	✓	✓	✓	✓	✓	✓	✓			
50 Hz 380 VΔ/660 VY, 60 Hz 440 VΔ	3	3	–	✓	✓	✓	✓	✓	✓	✓	✓			
50 Hz 240 VΔ/415 VY, 60 Hz 480 VY	2	3	–	✓	✓	✓	✓	✓	✓	✓	✓			
50 Hz 415 VΔ, 60 Hz 480 VΔ	3	5	–	✓	✓	✓	✓	✓	✓	✓	✓			
50 Hz 400 VY, 60 Hz 460 VY [1]	0	2	–	○	○	○	○	○	○	○	○			
50 Hz 400 VΔ, 60 Hz 460 VΔ [2]	0	4	–	○	○	○	○	○	○	○	○			
60 Hz 220 VΔ/380 VY	1	7	–	✓	✓	✓	✓	✓	✓	✓	✓	Not for:	1MB10.2	
60 Hz 230 VΔ/400 VY	1	8	–	✓	✓	✓	✓	✓	✓	✓	✓	Only for:	1MB10.3 in combination with order code **D22**	
60 Hz 380 VΔ/660 VY	3	0	–	✓	✓	✓	✓	✓	✓	✓	✓			
60 Hz 400 VΔ/690 VY	3	1	–	✓	✓	✓	✓	✓	✓	✓	✓			
50 Hz 400 VY	9	0	**M4A**	○	○	○	○	○	○	○	○			
50 Hz 400 VΔ	9	0	**M4B**	○	○	○	○	○	○	○	○			
Voltage at 60 Hz (50 Hz power)														
220 VΔ/380 VY; 50 Hz power [3]	9	0	**M2A**	✓	✓	✓	✓	✓	✓	✓	✓			
220 VΔ/380 VY; 60 Hz power [6]	9	0	**M1A**	✓	✓	✓	✓	✓	✓	✓	✓			
380 VΔ/660 VY; 50 Hz power [3]	9	0	**M2B**	✓	✓	✓	✓	✓	✓	✓	✓			
380 VΔ/660 VY; 60 Hz power [6]	9	0	**M1B**	✓	✓	✓	✓	✓	✓	✓	✓			
440 VY; 50 Hz power [3]	9	0	**M2C**	✓	✓	✓	✓	✓	✓	✓	✓			
440 VY; 60 Hz power [6]	9	0	**M1C**	✓	✓	✓	✓	✓	✓	✓	✓			
440 VΔ; 50 Hz power [3]	9	0	**M2D**	✓	✓	✓	✓	✓	✓	✓	✓			
440 VΔ; 60 Hz power [6]	9	0	**M1D**	✓	✓	✓	✓	✓	✓	✓	✓			
460 VY; 50 Hz power [3]	9	0	**M2E**	✓	✓	✓	✓	✓	✓	✓	✓			
460 VY; 60 Hz power [6]	9	0	**M1E**	○	○	○	○	○	○	○	○			
460 VΔ; 50 Hz power [3]	9	0	**M2F**	✓	✓	✓	✓	✓	✓	✓	✓			
460 VΔ; 60 Hz power [6]	9	0	**M1F**	○	○	○	○	○	○	○	○			
575 VY; 50 Hz power [3]	9	0	**M2G**	✓	✓	✓	✓	✓	✓	✓	✓			
575 VY; 60 Hz power [6]	9	0	**M1G**	✓	✓	✓	✓	✓	✓	✓	✓			
575 VΔ; 50 Hz power [3]	9	0	**M2H**	✓	✓	✓	✓	✓	✓	✓	✓			
575 VΔ; 60 Hz power [6]	9	0	**M1H**	✓	✓	✓	✓	✓	✓	✓	✓			
400 VΔ/690 VY; 50 Hz power [3]	9	0	**M2J**	✓	✓	✓	✓	✓	✓	✓	✓			
400 VΔ/690 VY; 60 Hz power [6]	9	0	**M1J**	✓	✓	✓	✓	✓	✓	✓	✓			
480 VY; 50 Hz power [3]	9	0	**M2K**	✓	✓	✓	✓	✓	✓	✓	✓			
480 VY; 60 Hz power [6]	9	0	**M1K**	✓	✓	✓	✓	✓	✓	✓	✓			
480 VΔ; 50 Hz power [3]	9	0	**M2L**	✓	✓	✓	✓	✓	✓	✓	✓			
480 VΔ; 60 Hz power [6]	9	0	**M1L**	✓	✓	✓	✓	✓	✓	✓	✓			
230 VΔ/400 VY; 50 Hz power [3]	9	0	**M2M**	✓	✓	✓	✓	✓	✓	✓	✓			
230 VΔ/400 VY; 60 Hz power [6]	9	0	**M1M**	✓	✓	✓	✓	✓	✓	✓	✓			
Voltage at 87 Hz (87 Hz power)														
400 VΔ [5]	9	0	**M3A**	✓	✓	○	○	○	○	○	○			
Non-standard voltage and/or frequencies														
Non-standard winding [4]	9	0	**M1Y** • and customer specifications	✓	✓	✓	✓	✓	✓	✓	✓			

☐ Standard version
○ Without additional charge
✓ With additional charge

– Not possible
• This order code only determines the price of the version – Additional plain text is required.

1) Delta connection is not possible.
2) Star connection is not possible.
3) A power of 3.7 kW is stamped on the rating plate for versions 1MB1... - 1BA2, 1MB1... - 1BB2, 1MB1... - 1CC2 and 1MB1... - 1DD2 at 60 Hz with 50 Hz power in accordance with the international efficiency classification to IEC 60034-30.
4) Plain text must be specified in the order:
Voltage between 200 and 690 V (voltages outside this range are available on request), frequency, circuit, for 60 Hz additionally required rated power in kW.
5) Only possible for 4-pole, 6-pole and 8-pole motors and in combination with the order codes **B40** and **B41**. The operating data for converter operation is also provided in a table on the additional rating plate. The motor contains winding version 50 Hz 230 VΔ.
6) Order code M1A, M1B, M1C, M1D, M1E, M1F, M1G, M1H, M1K, M1L, and M1M in combination with order code B40, B41, B43 and B44 only on request.

© Innomotics 2024

Selection and ordering data

Voltages	Article No. supplement: Voltage code 12th and 13th position of the Article No.		Additional identification code with order code and plain text if required	Frame size 71	80	90	100	112	132	160	180	200	225	250	280	315	Motor version: IEC	Ex tb (Zone 21), Ex tc (Zone 22), Ex ec (Zone 2)	IE3 / IE2
				1MB15.3 Basic Line															
							1MB16.3 Performance Line												
				1MB15.1 Basic Line															
							1MB16.1 Performance Line												
1MB15 . . -																			
1MB16 . . -	■ -	■ .	Order code																
Voltage at 50 Hz or 60 Hz																			
50 Hz 230 VΔ/400 VY, 60 Hz 460 VY	2	2	–	☐	☐	☐	☐	☐	☐	☐	☐	☐	☐	☐	☐	☐			
50 Hz 400 VΔ/690 VY, 60 Hz 460 VΔ	3	4	–	☐	☐	☐	☐	☐	☐	☐	☐	☐	☐	☐	☐	☐			
50 Hz 400 VY, 60 Hz 460 VY [1]	0	2	–	○	○	○	○	○	○	○	○	○	○	○	○	○			
50 Hz 400 VΔ, 60 Hz 460 VΔ [2]	0	4	–	○	○	○	○	○	○	○	○	○	○	○	○	○			
50 Hz 500 VY	2	7	–	○	○	○	○	○	○	○	○	○	○	○	○	○			
50 Hz 500 VΔ	4	0	–	○	○	○	○	○	○	○	○	○	○	○	○	○			
50 Hz 220 VΔ/380 VY, 60 Hz 440 VY	2	1	–	✓	✓	✓	✓	✓	✓	✓	✓	✓	✓	✓	✓	✓			
50 Hz 380 VΔ/660 VY, 60 Hz 440 VΔ	3	3	–	✓	✓	✓	✓	✓	✓	✓	✓	✓	✓	✓	✓	✓			
50 Hz 240 VΔ/415 VY, 60 Hz 480 VY	2	3	–	✓	✓	✓	✓	✓	✓	✓	✓	✓	✓	✓	✓	✓			
50 Hz 415 VΔ, 60 Hz 480 VΔ	3	5	–	✓	✓	✓	✓	✓	✓	✓	✓	✓	✓	✓	✓	✓			
60 Hz 220 VΔ/380 VY	1	7	–	✓	✓	✓	✓	✓	✓	✓	✓	✓	✓	✓	✓	✓	Only for:	IEC IE2	
60 Hz 230 VΔ/400 VY	1	8	–	✓	✓	✓	✓	✓	✓	✓	✓	✓	✓	✓	✓	✓	Only for:	IEC IE2	
60 Hz 380 VΔ/660 VY	3	0	–	✓	✓	✓	✓	✓	✓	✓	✓	✓	✓	✓	✓	✓	Only for:	IEC IE2	
60 Hz 400 VΔ/690 VY	3	1	–	✓	✓	✓	✓	✓	✓	✓	✓	✓	✓	✓	✓	✓	Only for:	IEC IE2	
50 Hz 400 VY	9	0	M4A	○	○	○	○	○	○	○	○	○	○	○	○	○			
50 Hz 400 VΔ	9	0	M4B	○	○	○	○	○	○	○	○	○	○	○	○	○			
Voltage at 60 Hz and required power																			
220 VΔ/380 VY; 50 Hz power [3]	9	0	M2A	✓	✓	✓	✓	✓	✓	✓	✓	✓	✓	✓	✓	✓			
220 VΔ/380 VY; 60 Hz power	9	0	M1A	✓	✓	✓	✓	✓	✓	✓	✓	✓	✓	✓	✓	✓			
380 VΔ/660 VY; 50 Hz power [3]	9	0	M2B	–	–	–	✓	✓	✓	✓	✓	✓	✓	✓	✓	✓			
380 VΔ/660 VY; 60 Hz power	9	0	M1B	–	–	–	✓	✓	✓	✓	✓	✓	✓	✓	✓	✓			
440 VY; 50 Hz power [3]	9	0	M2C	–	–	–	✓	✓	✓	✓	✓	✓	✓	✓	✓	✓			
440 VY; 60 Hz power	9	0	M1C	–	–	–	✓	✓	✓	✓	✓	✓	✓	✓	✓	✓			
440 VΔ; 50 Hz power [3]	9	0	M2D	–	–	–	✓	✓	✓	✓	✓	✓	✓	✓	✓	✓			
440 VΔ; 60 Hz power	9	0	M1D	–	–	–	✓	✓	✓	✓	✓	✓	✓	✓	✓	✓			
460 VY; 50 Hz power [3]	9	0	M2E	–	–	–	✓	✓	✓	✓	✓	✓	✓	✓	✓	✓			
460 VY; 60 Hz power	9	0	M1E	–	–	–	○	○	○	○	○	○	○	○	○	○			
460 VΔ; 50 Hz power [3]	9	0	M2F	–	–	–	✓	✓	✓	✓	✓	✓	✓	✓	✓	✓			
460 VΔ; 60 Hz power	9	0	M1F	–	–	–	○	○	○	○	○	○	○	○	○	○			
575 VY; 50 Hz power [3]	9	0	M2G	–	–	–	✓	✓	✓	✓	✓	✓	✓	✓	✓	✓			
575 VY; 60 Hz power	9	0	M1G	–	–	–	✓	✓	✓	✓	✓	✓	✓	✓	✓	✓			
575 VΔ; 50 Hz power [3]	9	0	M2H	–	–	–	✓	✓	✓	✓	✓	✓	✓	✓	✓	✓			
575 VΔ; 60 Hz power	9	0	M1H	–	–	–	✓	✓	✓	✓	✓	✓	✓	✓	✓	✓			
400 VΔ/690 VY; 50 Hz power [3]	9	0	M2J	✓	✓	✓	✓	✓	✓	✓	✓	✓	✓	✓	✓	✓			
400 VΔ/690 VY; 60 Hz power	9	0	M1J	✓	✓	✓	✓	✓	✓	✓	✓	✓	✓	✓	✓	✓			
480 VY; 50 Hz power [3]	9	0	M2K	✓	✓	✓	✓	✓	✓	✓	✓	✓	✓	✓	✓	✓			
480 VY; 60 Hz power	9	0	M1K	✓	✓	✓	✓	✓	✓	✓	✓	✓	✓	✓	✓	✓			
480 VΔ; 50 Hz power [3]	9	0	M2L	✓	✓	✓	✓	✓	✓	✓	✓	✓	✓	✓	✓	✓			
480 VΔ; 60 Hz power	9	0	M1L	✓	✓	✓	✓	✓	✓	✓	✓	✓	✓	✓	✓	✓			
230 VΔ/400 VY; 50 Hz power [3]	9	0	M2M	✓	✓	✓	✓	✓	✓	✓	✓	✓	✓	✓	✓	✓			
230 VΔ/400 VY; 60 Hz power	9	0	M1M	✓	✓	✓	✓	✓	✓	✓	✓	✓	✓	✓	✓	✓			
Voltage at 87 Hz (87 Hz power)																			
400 VΔ [5]	9	0	M3A	✓	✓	✓	✓	✓	✓	✓	✓	✓	–	–	–	–			
Non-standard voltage and/or frequencies																			
Non-standard winding [4]	9	0	M1Y • and customer specifications	✓	✓	✓	✓	✓	✓	✓	✓	✓	✓	✓	✓	✓			

☐ Standard version
○ Without additional charge
✓ With additional charge

– Not possible
• This order code only determines the price of the version – Additional plain text is required.

[1] Delta connection is not possible.
[2] Star connection is not possible.
[3] A power of 3.7 kW is stamped on the rating plate for versions 1MB1... - 1BA2, 1MB1... - 1BB2, 1MB1... - 1CC2 and 1MB1... - 1DD2 at 60 Hz with 50 Hz power in accordance with the international efficiency classification to IEC 60034-30.

[4] Plain text must be specified in the order:
Voltage between 200 and 690 V (voltages outside the range on request).
Frequency, connection, for 60 Hz, additionally required rated power in kW.
[5] Only possible for 4-pole, 6-pole and 8-pole motors and in combination with the order codes **B40** and **B41**. The operating data for converter operation is also provided in a table on the additional rating plate. The motor contains winding version 50 Hz 230 VΔ.

© Innomotics 2024

Innomotics XP 1MB1, 1MB5 explosion-protected motors

Cast-iron series 1MB.543 Basic Line and 1MB.643 Performance Line

Selection and ordering data

Voltages	Article No. supplement: Voltage code 12th and 13th position of the Article No.		Additional identification code with order code and plain text if required	Frame size 71	80	90	100	112	132	160	180	200	225	250	280	315	Motor version: IEC	Ex eb (Zone 1)	IE3
				1MB1543 Basic Line															
							1MB1643 Performance Line												
													1MB5543 Basic Line						
													1MB5643 Performance Line						
1MB.543 - . . . . ■	- ■ .																		
1MB.643 - . . . . ■	- ■ .		Order code																
Voltage at 50 Hz or 60 Hz 3)																			
50 Hz 230 VΔ/400 VY	**2**	**2**	–	☐	☐	☐	☐	☐	☐	☐	☐	☐	☐	☐	☐	–			
50 Hz 400 VΔ/690 VY	**3**	**4**	–	☐	☐	☐	☐	☐	☐	☐	☐	☐	☐	☐	☐	☐			
50 Hz 500 VY	**2**	**7**	–	○	○	○	○	○	○	○	○	○	○	○	○	–			
50 Hz 500 VΔ 1)	**4**	**0**	–	○	○	○	○	○	○	○	○	○	○	○	○	○			
50 Hz 220 VΔ/380 VY	**2**	**1**	–	✓	✓	✓	✓	✓	✓	✓	✓	✓	–	–	–	–			
50 Hz 230 VΔ	**0**	**1**	–	○	○	○	○	○	○	○	○	○	–	–	–	–			
50 Hz 380 VΔ/660 VY	**3**	**3**	–	✓	✓	✓	✓	✓	✓	✓	✓	✓	✓	✓	✓	✓			
50 Hz 240 VΔ 1)	**2**	**3**	–	✓	✓	✓	✓	✓	✓	✓	✓	✓	✓	✓	✓	–			
50 Hz 415 VΔ	**3**	**5**	–	✓	✓	✓	✓	✓	✓	✓	✓	✓	✓	✓	✓	✓			
50 Hz 400 VY	**9**	**0**	**M4A**	○	○	○	○	○	○	○	○	○	○	○	○	–			
50 Hz 400 VΔ	**9**	**0**	**M4B**	○	○	○	○	○	○	○	○	○	○	○	○	○			
Voltage at 60 Hz and required power																			
220 VΔ/380 VY; 50 Hz power	**9**	**0**	**M2A**	✓	✓	✓	✓	✓	✓	✓	✓	✓	–	–	–	–			
380 VΔ/660 VY; 50 Hz power 2)	**9**	**0**	**M2B**	✓	✓	✓	✓	✓	✓	✓	✓	✓	✓	✓	✓	✓			
440 VY; 50 Hz power	**9**	**0**	**M2C**	✓	✓	✓	✓	✓	✓	✓	✓	✓	✓	✓	✓	–			
440 VΔ; 50 Hz power	**9**	**0**	**M2D**	✓	✓	✓	✓	✓	✓	✓	✓	✓	✓	✓	✓	✓			
460 VY; 50 Hz power	**9**	**0**	**M2E**	✓	✓	✓	✓	✓	✓	✓	✓	✓	✓	✓	✓	–			
460 VΔ; 50 Hz power	**9**	**0**	**M2F**	✓	✓	✓	✓	✓	✓	✓	✓	✓	✓	✓	✓	✓			
575 VY; 50 Hz power 2)	**9**	**0**	**M2G**	✓	✓	✓	✓	✓	✓	✓	✓	✓	✓	✓	✓	–			
575 VΔ; 50 Hz power	**9**	**0**	**M2H**	✓	✓	✓	✓	✓	✓	✓	✓	✓	✓	✓	✓	✓			
Non-standard voltage and/or frequencies																			
Non-standard winding 2)	**9**	**0**	**M1Y** • and customer specifications	✓	✓	✓	✓	✓	✓	✓	✓	✓	✓	✓	✓	✓			

☐ Standard version
○ Without additional charge
✓ With additional charge

– Not possible
• This order code only determines the price of the version – Additional plain text is required.

6

1) Special certification is required for 60 Hz.
2) Plain text must be specified in the order:
Voltage between 200 V and 690 V (voltages outside this range are available on request), frequency, circuit, for 60 Hz additionally required rated power in kW.

3) Motors in these frame sizes have a second rating plate (T1/T2 and T3) as standard. The T3 power is stamped on the rating plate as standard if the following motors are selected with PTC thermistor (protection by PTC thermistor only) or voltage code "**90**":
– 2-pole motors: Frame sizes 132 to 160
– 4-pole motors: Frame size 180
Alternatively, with order code **B33,** the "T1/T2 power is stamped on the rating plate".
– 2-pole motors: Frame sizes 132 to 200
– 4-pole motors: Frame sizes 180 to 200

© Innomotics 2024

Innomotics XP 1MB1, 1MB5 explosion-protected motors

Selection and ordering data

Voltages	Article No. supplement: Voltage code 12th and 13th position of the Article No.		Additional identification code with order code and plain text if required	Frame size 71	80	90	100	112	132	160	180	200	225	250	280	315	355	Motor version: IEC	Ex db, Ex db eb (Zone 1)	IE3
				1MB1.5., 1MB1.6.																
															1MB55..					
							1MB18.3													
															1MB58.3					
1MB..5 . -																				
1MB..6 . -	■ -	■ .	Order code																	
Voltage at 50 Hz or 60 Hz																				
50 Hz 230 VΔ/400 VY, 60 Hz 460 VY	2	2	–	□	□	□	□	□	□	□	□	□	□	□	□	–	–			
50 Hz 400 VΔ/690 VY, 60 Hz 460 VΔ	3	4	–	□	□	□	□	□	□	□	□	□	□	□	□	□	□			
50 Hz 500 VY	2	7	–	○	○	○	○	○	○	○	○	○	○	○	○	–	–			
50 Hz 500 VΔ	4	0	–	○	○	○	○	○	○	○	○	○	○	○	○	○	○			
50 Hz 220 VΔ/380 VY, 60 Hz 440 VY	2	1	–	✓	✓	✓	✓	✓	✓	✓	✓	✓	✓	✓	✓	–	–			
50 Hz 380 VΔ/660 VY, 60 Hz 440 VΔ	3	3	–	✓	✓	✓	✓	✓	✓	✓	✓	✓	✓	✓	✓	✓	✓			
50 Hz 240 VΔ/415 VY, 60 Hz 480 VY	2	3	–	✓	✓	✓	✓	✓	✓	✓	✓	✓	✓	✓	✓	–	–			
50 Hz 415 VΔ, 60 Hz 480 VΔ	3	5	–	✓	✓	✓	✓	✓	✓	✓	✓	✓	✓	✓	✓	✓	✓			
50 Hz 400 VY	9	0	M4A	○	○	○	○	○	○	○	○	○	○	○	○	–	–			
50 Hz 400 VΔ	9	0	M4B	○	○	○	○	○	○	○	○	○	○	○	○	○	○			
50 Hz 690 VY	9	0	M4E	–	–	–	○	○	○	○	○	○	○	○	○	○	○			
50 Hz 690 VΔ	9	0	M4F	–	–	–	○	○	○	○	○	○	○	○	○	○	○			
50 Hz 230 VΔ	0	1	–	○	○	○	○	○	○	○	○	○	○	○	○	–	–			
50 Hz 400 VY [1]	0	2	–	○	○	○	○	○	○	○	○	○	○	○	○	–	–			
50 Hz 400 VΔ [2]	0	4	–	○	○	○	○	○	○	○	○	○	○	○	○	○	○			
Voltage at 60 Hz and required power																				
220 VΔ/380 VY; 50 Hz power [3]	9	0	M2A	✓	✓	✓	✓	✓	✓	✓	✓	✓	✓	✓	✓	–	–			
220 VΔ/380 VY; 60 Hz power	9	0	M1A	✓	✓	✓	✓	✓	✓	✓	✓	✓	✓	✓	✓	–	–			
380 VΔ/660 VY; 50 Hz power [3]	9	0	M2B	–	–	–	✓	✓	✓	✓	✓	✓	✓	✓	✓	✓	✓			
380 VΔ/660 VY; 60 Hz power	9	0	M1B	✓	✓	✓	✓	✓	✓	✓	✓	✓	✓	✓	✓	✓	–			
440 VY; 50 Hz power [3]	9	0	M2C	✓	✓	✓	✓	✓	✓	✓	✓	✓	✓	✓	✓	–	–			
440 VY; 60 Hz power	9	0	M1C	✓	✓	✓	✓	✓	✓	✓	✓	✓	✓	✓	✓	–	–			
440 VΔ; 50 Hz power [3]	9	0	M2D	✓	✓	✓	✓	✓	✓	✓	✓	✓	✓	✓	✓	✓	✓			
440 VΔ; 60 Hz power	9	0	M1D	✓	✓	✓	✓	✓	✓	✓	✓	✓	✓	✓	✓	✓	–			
460 VY; 50 Hz power [3]	9	0	M2E	✓	✓	✓	✓	✓	✓	✓	✓	✓	✓	✓	✓	–	–			
460 VY; 60 Hz power	9	0	M1E	✓	✓	✓	✓	✓	✓	✓	✓	✓	✓	✓	✓	–	–			
460 VΔ; 50 Hz power [3]	9	0	M2F	✓	✓	✓	✓	✓	✓	✓	✓	✓	✓	✓	✓	✓	✓			
460 VΔ; 60 Hz power	9	0	M1F	✓	✓	✓	✓	✓	✓	✓	✓	✓	✓	✓	✓	✓	–			
575 VY; 50 Hz power [3]	9	0	M2G	–	–	–	✓	✓	✓	✓	✓	✓	✓	✓	✓	–	–			
575 VY; 60 Hz power	9	0	M1G	✓	✓	✓	✓	✓	✓	✓	✓	✓	✓	✓	✓	✓	–			
575 VΔ; 50 Hz power [3]	9	0	M2H	–	–	–	✓	✓	✓	✓	✓	✓	✓	✓	✓	✓	✓			
575 VΔ; 60 Hz power	9	0	M1H	✓	✓	✓	✓	✓	✓	✓	✓	✓	✓	✓	✓	✓	–			
400 VΔ/690 VY; 60-Hz power	9	0	M1J	✓	✓	✓	✓	✓	✓	✓	✓	✓	✓	✓	✓	✓	–			
480 VΔ; 50-Hz power	9	0	M2L	✓	✓	✓	✓	✓	✓	✓	✓	✓	✓	✓	✓	✓	✓			
480 VΔ; 60-Hz power	9	0	M1L	✓	✓	✓	✓	✓	✓	✓	✓	✓	✓	✓	✓	✓	–			
Non-standard voltage and/or frequencies																				
Non-standard winding [4]	9	0	M1Y • and customer specifications	✓	✓	✓	✓	✓	✓	✓	✓	✓	✓	✓	✓	✓	✓			

□ Standard version
○ Without additional charge
✓ With additional charge
– Not possible
• This order code only determines the price of the version – Additional plain text is required.

[1] Delta connection is not possible.
[2] Star connection is not possible.
[3] Power at 60 Hz according to the specification in the selection and ordering data of the basic motor.
[4] Plain text must be specified in the order:
Voltage between 200 and 690 V (voltages outside this range are available on request), frequency, circuit, for 60 Hz additionally required rated power in kW.

© Innomotics 2024

Innomotics XP 1MB1, 1MB5 explosion-protected motors

Cast-iron series 1MB55.4, 1MB55.3, 1MB58.3

Selection and ordering data

Voltages	Article No. supplement: Voltage code 12th and 13th position of the Article No.		Additional identification code with order code and plain text, if required	Frame size 315	355	400, 450 $P_{rated} \leq 630$ kW	400, 450 $P_{rated} > 630$ kW	Motor version IEC	Ex ec, Ex tc, Ex tb (Zonen 2, 22 und 21)	IE4 / IE3
				1MB55 . 4						
				1MB55 . 3						
						1MB58 . 3				
1MB5 . . . - . . . . ■ -	■ . . .		Order code							
Voltage at 50 Hz or 60 Hz										
50 Hz 400 VΔ/690 VY, 60 Hz 460 VΔ	3	4	–	☐	☐	☐	O. R.			
50 Hz 500 VΔ	4	0	–	○	○	○	○			
60 Hz 575 VΔ [2]				–	–	○	☐			
50 Hz 690 VΔ	4	7	–	✓	✓	✓	✓			
50 Hz 380 VΔ/660 VY, 60 Hz 440 VΔ	3	3	–	✓	✓	✓	✓			
50 Hz 415 VΔ, 60 Hz 480 VΔ	3	5	–	✓	✓	✓	✓			
50 Hz 600 VΔ, 60 Hz 690 VΔ	4	4	–	–	–	✓	✓			
50 Hz 660 VΔ	4	6	–	–	–	✓	✓			
Voltage at 50 Hz and required power										
400 VΔ; 50 Hz power	9	0	M4B	O. R.	O. R.	O. R.	O. R.			
Voltage at 60 Hz and required power										
440 VΔ; 60 Hz power	9	0	M1D	✓	✓	✓	✓			
460 VΔ; 60 Hz power	9	0	M1F	✓	✓	✓	✓			
575 VΔ; 60 Hz power [2]	9	0	M1H	✓	✓	✓	✓			
400 VΔ/690 VY; 60 Hz power	9	0	M1J	–	–	✓	✓			
480 VΔ; 60 Hz power	9	0	M1L	✓	✓	✓	✓			
440 VΔ; 50 Hz power	9	0	M2D	✓	✓	✓	✓			
460 VΔ; 50 Hz power	9	0	M2F	✓	✓	✓	✓			
575 VΔ; 50 Hz power [2]	9	0	M2H	✓	✓	✓	✓			
400 VΔ/690 VY; 50 Hz power	9	0	M2J	–	–	✓	✓			
480 VΔ; 50 Hz power	9	0	M2L	✓	✓	✓	✓			
Non-standard voltage and/or frequencies										
Non-standard winding [1]	9	0	M1Y • and customer specifications	✓	✓	✓	✓			

☐ Standard version
○ Without additional charge
• This order code only determines the price of the version – Additional plain text is required.
O. R. Possible on request
✓ With additional charge

6

[1] 2-pole version, frame size 450 for 60 Hz operation on request.

[2] Plain text must be specified in the order: Voltage between 380 and 690 V (voltages outside this range are available on request), frequency, circuit, rated power in kW.

© Innomotics 2024

Innomotics XP 1MB1, 1MB5 explosion-protected motors

Selection and ordering data

Types of construction	Article No. supplement: Type of construction code letter 14th position of the Article No.	Article No. supplement: For types of construction with order code(s) Article No. with additional identification code **-Z**	Frame size 63	71	80	90	100	112	132	160	Motor version		
					1MB10.3						IEC	Ex tb (Zone 21), Ex tc (Zone 22), Ex ec (Zone 2)	IE3
			1MB10.1										IE2
							1MB10.2						IE1
1MB10 . . - . . . . . - .	**■ . . (-Z)**	Order code											
Without flange													
IM B3	**A**	**–**	☐	☐	☐	☐	☐	☐	☐	☐			
IM B6 [1] 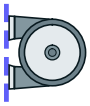	**T**	**–**	☐	☐	☐	☐	☐	☐	☐	☐			
IM B7 [1] 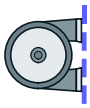	**U**	**–**	☐	☐	☐	☐	☐	☐	☐	☐			
IM B8 [1]	**V**	**–**	☐	☐	☐	☐	☐	☐	☐	☐			
IM V6 [1] 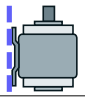	**D**	**–**	☐	☐	☐	☐	☐	☐	☐	☐			
IM V5 with protective cover [1] [2]	**C**	**H00**	✓	✓	✓	✓	✓	✓	✓	✓			

6

For legends and footnotes, see page 6/77.

© Innomotics 2024

Innomotics XP 1MB1, 1MB5 explosion-protected motors

Aluminum series 1MB10

Types of construction	Article No. supplement: Type of construction code letter 14th position of the Article No.	Article No. supplement: For types of construction with order code(s) Article No. with additional identification code -Z	Frame size 63	71	80	90	100	112	132	160	Motor version		
					1MB10.3						IEC	Ex tb (Zone 21), Ex tc (Zone 22), Ex ec (Zone 2)	IE3
			1MB10.1										IE2
							1MB10.2						IE1
1MB10 . . - . . . . . - .	■ . . (-Z)	Order code											
With flange	**Acc. to EN 50347 Acc. to DIN 42 948**		**FF115 A 140**	**FF130 A 160**	**FF165 A 200**	**FF165 A 200**	**FF215 A 250**	**FF215 A 250**	**FF265 A 300**	**FF300 A 350**			
IM B5 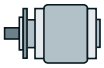	**F**	**–**	✓	✓	✓	✓	✓	✓	✓	✓			
IM V1 with protective cover [1) 2)]	**G**	**H00**	✓	✓	✓	✓	✓	✓	✓	✓			
IM V3 [1)]	**H**	**–**	✓	✓	✓	✓	✓	✓	✓	✓			
IM B35 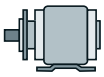	**J**	**–**	✓	✓	✓	✓	✓	✓	✓	✓			
With flange next largest	**Acc. to EN 50347 Acc. to DIN 42 948**		**– –**	**– –**	**– –**	**FF215 A 250**	**FF265 A 300**	**FF265 A 300**	**FF300 A 350**	**– –**			
IM B5 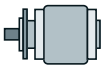	**F**	**P01**	–	–	–	✓	✓	✓	✓	–			
IM V1 with protective cover [1) 2)]	**G**	**P01+H00**	–	–	–	✓	✓	✓	✓	–			
IM V3 [1)]	**H**	**P01**	–	–	–	✓	✓	✓	✓	–			
IM B35 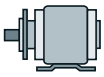	**J**	**P01**	–	–	–	✓	✓	✓	✓	–			
With flange next smallest	**Acc. to EN 50347 Acc. to DIN 42 948**		**FT100 A 120**	**FF115 A 140**	**FF130 A 160**	**– –**	**FF165 A 200**	**FF165 A 200**	**FF215 A 250**	**– –**			
IM B5 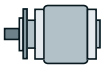	**F**	**P02**	✓	✓	✓	–	✓	✓	✓	–			
IM V1 with protective cover [1) 2)] 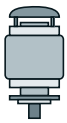	**G**	**P02+H00**	✓	✓	✓	–	✓	✓	✓	–			
IM V3 [1)]	**H**	**P02**	✓	✓	✓	–	✓	✓	✓	–			
IM B35 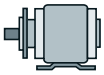	**J**	**P02**	✓	✓	✓	–	✓	✓	✓	–			

For legends and footnotes, see page 6/77.

© Innomotics 2024

Innomotics XP 1MB1, 1MB5 explosion-protected motors

Aluminum series 1MB10

Types of construction	Article No. supplement: Type of construction code letter 14th position of the Article No.	Article No. supplement: For types of construction with order code(s) Article No. with additional identification code -Z	Frame size 63	71	80	90	100	112	132	160	Motor version		
					1MB10.3						IEC	Ex tb (Zone 21), Ex tc (Zone 22), Ex ec (Zone 2)	IE3
			1MB10.1										IE2
							1MB10.2						IE1
1MB10 . . - . . . . . - .	■ . . (-Z)	Order code											
With flange	**Acc. to EN 50347 Acc. to DIN 42 948**		**FT75 C 90**	**FT85 C 105**	**FT100 C 120**	**FT115 C 140**	**FT130 C 160**	**FT130 C 160**	**FT165 C 200**	**FT215 C 250**			
IM B14 [1]	**K**	**–**	✓	✓	✓	✓	✓	✓	✓	✓			
IM V19 [1] 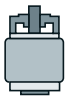	**L**	**–**	✓	✓	✓	✓	✓	✓	✓	✓			
IM V18 with protective cover [1] [2] 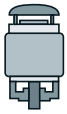	**M**	**H00**	✓	✓	✓	✓	✓	✓	✓	✓			
IM B34	**N**	**–**	✓	✓	✓	✓	✓	✓	✓	✓			
With flange next largest	**Acc. to EN 50347 Acc. to DIN 42 948**		**FT100 C 120**	**FT115 C 140**	**FT115 C 140**	**FT130 C 160**	**FT165 C 200**	**FT165 C 200**	**FT215 C 250**	**– –**			
IM B14 [1]	**K**	**P01**	✓	✓	✓	✓	✓	✓	✓	–			
IM V19 [1]	**L**	**P01**	✓	✓	✓	✓	✓	✓	✓	–			
IM V18 with protective cover [1] [2] 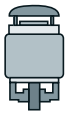	**M**	**P01+H00**	✓	✓	✓	✓	✓	✓	✓	–			
IM B34	**N**	**P01**	✓	✓	✓	✓	✓	✓	✓	–			
With flange next smallest	**Acc. to EN 50347 Acc. to DIN 42 948**		**FT65 C 80**	**FT75 C 90**	**– –**	**– –**	**FT115 C 140**	**– –**	**– –**	**– –**			
IM B14 [1]	**K**	**P02**	✓	✓	–	–	✓	–	–	–			
IM V19 [1] 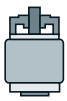	**L**	**P02**	✓	✓	–	–	✓	–	–	–			
IM V18 with protective cover [1] [2] 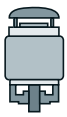	**M**	**P02+H00**	✓	✓	–	–	✓	–	–	–			
IM B34	**N**	**P02**	✓	✓	–	–	✓	–	–	–			

☐ Standard version
✓ With additional charge

– Not possible

[1] The following applies for explosion-protected motors: In the case of the types of construction with shaft extension down, the version "with protective cover" is required. For types of construction with shaft extension pointing upwards, a suitable cover must be implemented to prevent small parts from falling into the fan cover (see the standard IEC/EN 60079-0). The cover must not block the cooling air flow.

[2] The "Standard cylindrical shaft extension (second shaft extension)" option (order code **L05**) is not possible.

© Innomotics 2024

Innomotics XP 1MB1, 1MB5 explosion-protected motors

Cast-iron series 1MB15 Basic Line, 1MB16 Performance Line

Selection and ordering data

Types of construction	Article No. supplement: Type of construction code letter 14th position of the Article No.	Article No. supplement: For types of construction with order code(s) Article No. with additional identification code -Z	Frame size 71	80	90	100	112	132	160	180	200	225	250	280	315 S/M	315 L	Motor version		
			1MB15.3 Basic Line														IEC	Ex tb (Zone 21), Ex tc (Zone 22), Ex ec (Zone 2)	IE3
						1MB16.3 Performance Line													
			1MB15.1 Basic Line																IE2
						1MB16.1 Performance Line													
1MB15 . . - . . . . . - . ■ . . (-Z)																			
1MB16 . . - . . . . . - . ■ . . (-Z)		Order code																	
Without flange																			
IM B3	**A**	**–**	☐	☐	☐	☐	☐	☐	☐	☐	☐	☐	☐	☐	☐	☐			
IM B6 1) 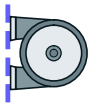	**T**	**–**	☐	☐	☐	☐	☐	☐	☐	☐	☐	☐	☐	☐	☐	☐			
IM B7 1) 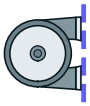	**U**	**–**	☐	☐	☐	☐	☐	☐	☐	☐	☐	☐	☐	☐	☐	☐			
IM B8 1)	**V**	**–**	☐	☐	☐	☐	☐	☐	☐	☐	☐	☐	☐	☐	☐	☐			
IM V6 1)	**D**	**–**	☐	☐	☐	☐	☐	☐	☐	☐	☐	☐	☐	☐	☐	☐			
IM V5 with protective cover 1) 2) 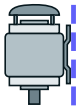	**C**	**H00**	✓	✓	✓	✓	✓	✓	✓	✓	✓	✓	✓	✓	✓	✓			

For legends and footnotes, see page 6/80.

© Innomotics 2024

Innomotics XP 1MB1, 1MB5 explosion-protected motors

Cast-iron series 1MB15 Basic Line, 1MB16 Performance Line

Types of construction	Article No. supplement: Type of construction code letter 14th position of the Article No.	Article No. supplement: For types of construction with order code(s) Article No. with additional identification code -Z	Frame size 71	80	90	100	112	132	160	180	200	225	250	280	315 S/M	315 L	Motor version		
			1MB15.3 Basic Line														IEC	Ex tb (Zone 21), Ex tc (Zone 22), Ex ec (Zone 2)	IE3
						1MB16.3 Performance Line													
			1MB15.1 Basic Line																IE2
						1MB16.1 Performance Line													
1MB15 . . - . . . . . - .	■ . . (-Z)																		
1MB16 . . - . . . . . - .	■ . . (-Z)	Order code																	
With flange	**Acc. to EN 50347**		FF130	FF165	FF165	FF215	FF215	FF265	FF300	FF300	FF350	FF400	FF500	FF500	FF600	FF600			
	Acc. to DIN 42 948		A 160	A 200	A 200	A 250	A 250	A 300	A 350	A 350	A 400	A 450	A 550	A 550	A 660	A 660			
IM B5 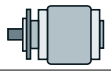	**F**	**–**	✓	✓	✓	✓	✓	✓	✓	✓	✓	✓	✓	✓	✓	–			
IM V1 with protective cover 1) 2)	**G**	**H00**	✓	✓	✓	✓	✓	✓	✓	✓	✓	✓	✓	✓	✓	✓			
IM V3 1)	**H**	**–**	✓	✓	✓	✓	✓	✓	✓	✓	✓	✓	✓	✓	✓	–			
IM B35 1) 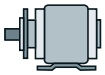	**J**	**–**	✓	✓	✓	✓	✓	✓	✓	✓	✓	✓	✓	✓	✓	✓			
With flange next largest	**Acc. to EN 50347**		–	–	FF215	FF265	FF265	FF300	–	–	–	–	–	–	–	–			
	Acc. to DIN 42 948		–	–	A 250	A 300	A 300	A 350	–	–	–	–	–	–	–	–			
IM B5 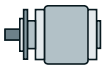	**F**	**P01**	–	–	✓	✓	✓	✓	–	–	–	–	–	–	–	–			
IM V1 with protective cover 1) 2)	**G**	**P01+H00**	–	–	✓	✓	✓	✓	–	–	–	–	–	–	–	–			
IM V3 1)	**H**	**P01**	–	–	✓	✓	✓	✓	–	–	–	–	–	–	–	–			
IM B35 1) 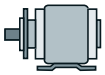	**J**	**P01**	–	–	✓	✓	✓	✓	–	–	–	–	–	–	–	–			
With flange next smallest	**Acc. to EN 50347**		–	FF130	–	FF165	FF165	FF215	FF265	FF265	FF300	–	–	–	–	–			
	Acc. to DIN 42 948		–	A 160	–	A 200	A 200	A 250	A 300	A 300	A 350	–	–	–	–	–			
IM B5 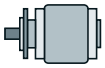	**F**	**P02**	–	✓	–	✓	✓	✓	✓	✓	✓	–	–	–	–	–			
IM V1 with protective cover 1) 2)	**G**	**P02+H00**	–	✓	–	✓	✓	✓	✓	✓	✓	–	–	–	–	–			
IM V3 1)	**H**	**P02**	–	✓	–	✓	✓	✓	✓	✓	✓	–	–	–	–	–			
IM B35 1) 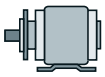	**J**	**P02**	–	✓	–	✓	✓	✓	✓	✓	✓	–	–	–	–	–			

For legends and footnotes, see page 6/80.

© Innomotics 2024

Innomotics XP 1MB1, 1MB5 explosion-protected motors

Cast-iron series 1MB15 Basic Line, 1MB16 Performance Line

Types of construction	Article No. supplement: Type of construction code letter 14th position of the Article No.	Article No. supplement: For types of construction with order code(s) Article No. with additional identification code -Z	Frame size 71	80	90	100	112	132	160	180	200	225	250	280	315 S/M	315 L	Motor version		
			1MB15.3 Basic Line														IEC	Ex tb (Zone 21), Ex tc (Zone 22), Ex ec (Zone 2)	IE3
						1MB16.3 Performance Line													
			1MB15.1 Basic Line																IE2
						1MB16.1 Performance Line													
1MB15 . . - . . . . . - .	■ . . (-Z)																		
1MB16 . . - . . . . . - .	■ . . (-Z)	Order code																	
With flange	**Acc. to EN 50347**		FT85	FT100	FT115	FT130	FT130	FT165	FT215	-	-	-	-	-	-	-			
	Acc. to DIN 42 948		C105	C120	C140	C160	C160	C200	C250	-	-	-	-	-	-	-			
IM B14 1)	**K**	**–**	✓	✓	✓	✓	✓	✓	✓	–	–	–	–	–	–	–			
IM V19 1)	**L**	**–**	✓	✓	✓	✓	✓	✓	✓	–	–	–	–	–	–	–			
IM V18 with protective cover 1) 2)	**M**	**H00**	✓	✓	✓	✓	✓	✓	✓	–	–	–	–	–	–	–			
IM B34	**N**	**–**	✓	✓	✓	✓	✓	✓	✓	–	–	–	–	–	–	–			
With flange next largest	**Acc. to EN 50347**		FT115	FT130	FT130	FT165	FT165	FT215	-	-	-	-	-	-	-	-			
	Acc. to DIN 42 948		C140	C160	C160	C200	C200	C250	-	-	-	-	-	-	-	-			
IM B14 1)	**K**	**P01**	✓	✓	✓	✓	✓	✓	–	–	–	–	–	–	–	–			
IM V19 1)	**L**	**P01**	✓	✓	✓	✓	✓	✓	–	–	–	–	–	–	–	–			
IM V18 with protective cover 1) 2)	**M**	**P01+H00**	✓	✓	✓	✓	✓	✓	–	–	–	–	–	–	–	–			
IM B34	**N**	**P01**	✓	✓	✓	✓	✓	✓	–	–	–	–	–	–	–	–			
With flange next smallest	**Acc. to EN 50347**		-	-	-	FT115	-	-	-	-	-	-	-	-	-	-			
	Acc. to DIN 42 948		-	-	-	C140	-	-	-	-	-	-	-	-	-	-			
IM B14 1)	**K**	**P02**	–	–	–	✓	–	–	–	–	–	–	–	–	–	–			
IM V19 1)	**L**	**P02+H00**	–	–	–	✓	–	–	–	–	–	–	–	–	–	–			
IM V18 with protective cover 1) 2)	**M**	**P02**	–	–	–	✓	–	–	–	–	–	–	–	–	–	–			
IM B34	**N**	**P02**	–	–	–	✓	–	–	–	–	–	–	–	–	–	–			

☐ Standard version
✓ With additional charge

– Not possible

1) The following applies for explosion-protected motors: In the case of the types of construction with shaft extension down, the version "with protective cover" is required. For types of construction with shaft extension pointing upwards, a suitable cover must be implemented to prevent small parts from falling into the fan cover (see the standard IEC/EN 60079-0). The cover must not block the cooling air flow.

2) The "Standard cylindrical shaft extension (second shaft extension)" option (order code **L05**) is not possible.

© Innomotics 2024

Innomotics XP 1MB1, 1MB5 explosion-protected motors

Selection and ordering data

Types of construction	Article No. supplement: Type of construction code letter 14th position of the Article No.	Article No. supplement: For types of construction with order code(s) Article No. with additional identification code -Z	Frame size 71	80	90	100	112	132	160	180	200	225	250	280	315 S/M	315 L	Motor version: IEC	Ex eb (Zone 1)	IE3
			1MB1543 Basic Line																
						1MB1643 Performance Line													
												1MB5543 Basic Line							
												1MB5643 Performance Line							
1MB.543 - . . . . . - .	■ . . (-Z)																		
1MB.643 - . . . . . - .	■ . . (-Z)	Order code																	
Without flange																			
IM B3 2)	A	–	☐	☐	☐	☐	☐	☐	☐	☐	☐	☐	☐	☐	☐	☐			
IM B6 1) 2) 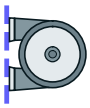	T	–	☐	☐	☐	☐	☐	☐	☐	☐	☐	☐	☐	☐	☐	☐			
IM B7 1) 2) 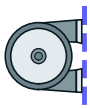	U	–	☐	☐	☐	☐	☐	☐	☐	☐	☐	☐	☐	☐	☐	☐			
IM B8 1) 2)	V	–	☐	☐	☐	☐	☐	☐	☐	☐	☐	☐	☐	☐	☐	☐			
IM V6 1) 2)	D	–	☐	☐	☐	☐	☐	☐	☐	☐	☐	☐	☐	☐	☐	☐			
IM V5 with protective cover 1) 2) 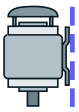	C	H00	✓	✓	✓	✓	✓	✓	✓	✓	✓	✓	✓	✓	✓	✓			
With flange	Acc. to EN 50347 Acc. to DIN 42 948		FF130 A 160	FF165 A 200	FF165 A 200	FF215 A 250	FF215 A 250	FF265 A 300	FF300 A 350	FF300 A 350	FF350 A 400	FF400 A 450	FF500 A 550	FF500 A 550	FF600 A 660	FF600 A 660			
IM B5 2) 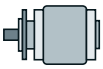	F	–	✓	✓	✓	✓	✓	✓	✓	✓	✓	✓	✓	✓	✓	–			
IM V1 with protective cover 1) 2) 3) 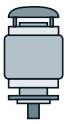	G	H00	✓	✓	✓	✓	✓	✓	✓	✓	✓	✓	✓	✓	✓	✓			
IM V3 1) 2)	H	–	✓	✓	✓	✓	✓	✓	✓	✓	✓	✓	✓	✓	✓	–			
IM B35 1) 2) 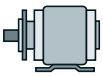	J	–	✓	✓	✓	✓	✓	✓	✓	✓	✓	✓	✓	✓	✓	✓			
IM V15 1) 2) 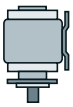	W	–	✓	✓	✓	✓	✓	✓	✓	✓	✓	✓	✓	✓	✓	✓			

For legends and footnotes, see page 6/83.

© Innomotics 2024

Innomotics XP 1MB1, 1MB5 explosion-protected motors

Cast-iron series 1MB.543 Basic Line and 1MB.643 Performance Line

Types of construction	Article No. supplement: Type of construction code letter 14th position of the Article No.	Article No. supplement: For types of construction with order code(s) Article No. with additional identification code -Z Order code	Frame size 71	80	90	100	112	132	160	180	200	225	250	280	315 S/M	315 L	Motor version IEC	Ex eb (Zone 1)	IE3
			1MB1543 Basic Line																
						1MB1643 Performance Line													
												1MB5543 Basic Line							
												1MB5643 Performance Line							
1MB.543 - . . . . . - .	■ . . (-Z)																		
1MB.643 - . . . . . - .	■ . . (-Z)																		
With flange next largest	**Acc. to EN 50347**		–	–	–	FF265	FF265	FF300	FF350	–	–	–	–	–	–	–			
	Acc. to DIN 42 948		–	–	–	A 300	A 300	A 350	A 400	–	–	–	–	–	–	–			
IM B5 2) 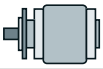	F	P01	–	–	–	✓	✓	✓	✓	–	–	–	–	–	–	–			
IM V1 with protective cover 1) 2) 3)	G	P01+H00	–	–	–	✓	✓	✓	✓	–	–	–	–	–	–	–			
IM V3 1) 2)	H	P01	–	–	–	✓	✓	✓	✓	–	–	–	–	–	–	–			
IM B35 1) 2) 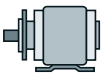	J	P01	–	–	–	✓	✓	✓	✓	–	–	–	–	–	–	–			
IM V15 1) 2)	W	P01	–	–	–	✓	✓	✓	✓	–	–	–	–	–	–	–			
With flange next smallest	**Acc. to EN 50347**		–	FF130	–	FF165	FF165	FF215	FF265	FF265	FF300	–	–	–	–	–			
	Acc. to DIN 42 948		–	A 160	–	A 200	A 200	A 250	A 300	A 300	A 350	–	–	–	–	–			
IM B5 2) 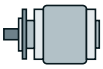	F	P02	–	✓	–	✓	✓	✓	✓	✓	✓	–	–	–	–	–			
IM V1 with protective cover 1) 2) 3)	G	P02+H00	–	✓	–	✓	✓	✓	✓	✓	✓	–	–	–	–	–			
IM V3 1) 2)	H	P02	–	✓	–	✓	✓	✓	✓	✓	✓	–	–	–	–	–			
IM B35 1) 2) 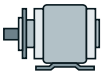	J	P02	–	✓	–	✓	✓	✓	✓	✓	✓	–	–	–	–	–			
IM V15 1) 2) 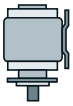	W	P02	–	✓	–	✓	✓	✓	✓	✓	✓	–	–	–	–	–			

For legends and footnotes, see page 6/83.

© Innomotics 2024

Innomotics XP 1MB1, 1MB5 explosion-protected motors

Cast-iron series 1MB.543 Basic Line and 1MB.643 Performance Line

Types of construction	Article No. supplement: Type of construction code letter 14th position of the Article No.	Article No. supplement: For types of construction with order code(s) Article No. with additional identification code -Z Order code	Frame size 71	80	90	100	112	132	160	180	200	225	250	280	315 S/M	315 L	Motor version IEC	Ex eb (Zone 1)	IE3
			1MB1543 Basic Line																
						1MB1643 Performance Line													
												1MB5543 Basic Line							
												1MB5643 Performance Line							
1MB.543 - . . . . . - . ■	. . (-Z)																		
1MB.643 - . . . . . - . ■	. . (-Z)																		
With flange	**Acc. to EN 50347**		FT85	FT100	FT115	FT130	FT130	FT165	FT215	-	-	-	-	-	-	-			
	Acc. to DIN 42 948		C105	C120	C140	C160	C160	C200	C250	-	-	-	-	-	-	-			
IM B14 1) 2)	K	–	✓	✓	✓	✓	✓	✓	✓	–	–	–	–	–	–	–			
IM V19 1) 2)	L	–	✓	✓	✓	✓	✓	✓	✓	–	–	–	–	–	–	–			
IM V18 with protective cover 1) 2) 3)	M	H00	✓	✓	✓	✓	✓	✓	✓	–	–	–	–	–	–	–			
IM B34 1) 2)	N	–	✓	✓	✓	✓	✓	✓	✓	–	–	–	–	–	–	–			
With flange next largest	**Acc. to EN 50347**		FT115	FT130	FT130	FT165	FT165	FT215	-	-	-	-	-	-	-	-			
	Acc. to DIN 42 948		C140	C160	C160	C200	C200	C250	-	-	-	-	-	-	-	-			
IM B14 1) 2) 4)	K	P01	✓	✓	✓	✓	✓	✓	–	–	–	–	–	–	–	–			
IM V19 1) 2) 4)	L	P01	✓	✓	✓	✓	✓	✓	–	–	–	–	–	–	–	–			
IM V18 with protective cover 1) 2) 3) 4)	M	P01+H00	✓	✓	✓	✓	✓	✓	–	–	–	–	–	–	–	–			
IM B34 1) 2) 4)	N	P01	✓	✓	✓	✓	✓	✓	–	–	–	–	–	–	–	–			
With flange next smallest	**Acc. to EN 50347**		-	-	-	FT115	-	-	-	-	-	-	-	-	-	-			
	Acc. to DIN 42 948		-	-	-	C140	-	-	-	-	-	-	-	-	-	-			
IM B14 1) 2) 4)	K	P02	–	–	–	✓	–	–	–	–	–	–	–	–	–	–			
IM V19 1) 2) 4)	L	P02	–	–	–	✓	–	–	–	–	–	–	–	–	–	–			
IM V18 with protective cover 1) 2) 3) 4)	M	P02+H00	–	–	–	✓	–	–	–	–	–	–	–	–	–	–			
IM B34 1) 2) 4)	N	P02	–	–	–	✓	–	–	–	–	–	–	–	–	–	–			

☐ Standard version
✓ With additional charge
– Not possible

1) The following applies for explosion-protected motors: In the case of the types of construction with shaft extension down, the version "with protective cover" is required. For types of construction with shaft extension pointing upwards, a suitable cover must be implemented to prevent small parts from falling into the fan cover (see the standard IEC/EN 60079-0). The cover must not block the cooling air flow.

2) The type of construction is stamped on the rating plate. For orders with condensation drainage holes (order code **H03**), if mounted in a different position, the position must be specified to ensure that the condensation drainage holes are positioned correctly.

3) The "Standard cylindrical shaft extension (second shaft extension)" option (order code **L05**) is not possible.

4) With reference to standard EN 50347, flanges that are 2 steps larger are used with option P01 in the frame sizes 71 and 80.

© Innomotics 2024

Innomotics XP 1MB1, 1MB5 explosion-protected motors

Cast-iron series 1MB.55., 1MB.853, 1MB.56., 1MB.863

Selection and ordering data

Types of construction	Article No. supplement: Type of construction code letter 14th position of the Article No.	Article No. supplement: For types of construction with order code(s) Article No. with additional identification code -Z	Frame size 71	80	90	100	112	132	160	180	200	225	250	280	315	355	Motor version	
			1MB1.5., 1MB1.6.														IEC	Ex db, Ex db eb IE3 (Zone 1)
														1MB55..				
						1MB18.3												
														1MB58.3				
1MB..5. - . . . . . - . . 1MB..6. - . . . . . - . ■ . . (-Z)		Order code																
Without flange																		
IM B3	A	–	□	□	□	□	□	□	□	□	□	□	□	□	□			
IM B6 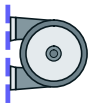	T	–	□	□	□	□	□	□	□	□	□	□	□	□	□	–	Not for:	frame size 315 L
IM B7 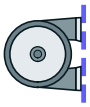	U	–	□	□	□	□	□	□	□	□	□	□	□	□	□	–	Not for:	frame size 315 L
IM B8	V	–	□	□	□	□	□	□	□	□	□	□	□	□	□	–	Only for:	up to frame size 315 S/M
IM V6 [2]	D	–	□	□	□	□	□	□	□	□	□	□	□	□	□	–	Not for:	frame size 315 (2-pole); 315 L and 355
IM V5 with protective cover [1] [2]	C	H00	✓	✓	✓	✓	✓	✓	✓	✓	✓	✓	✓	✓	✓	–	Not for:	frame size 315 (2-pole); 315 L and 355
With flange	Acc. to EN 50347 / Acc. to DIN 42 948		FF130 A160	FF165 A200	FF165 A200	FF215 A250	FF215 A250	FF265 A300	FF300 A350	FF300 A350	FF350 A400	FF400 A450	FF500 A550	FF500 A550	FF600 A660	FF740 A800		
IM B5 [1] 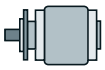	F	–	✓	✓	✓	✓	✓	✓	✓	✓	✓	✓	✓	✓	✓	–	Not for:	frame size 315 L
IM V1 with protective cover [1] [2] 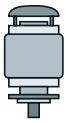	G	H00	✓	✓	✓	✓	✓	✓	✓	✓	✓	✓	✓	✓	✓	✓	Not for:	frame size 315 and 355 (2-pole)
IM V3 [2]	H	–	✓	✓	✓	✓	✓	✓	✓	✓	✓	✓	✓	✓	✓	–	Not for:	frame size 315 and 355 (2-pole)
IM B35 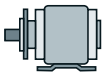	J	–	✓	✓	✓	✓	✓	✓	✓	✓	✓	✓	✓	✓	✓	✓		
IM V15 with protective cover [1] [2] 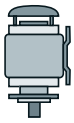	W	–	✓	✓	✓	✓	✓	✓	✓	✓	✓	✓	✓	✓	✓	–	Not for:	frame size 315 (2-pole); 315 L and 355
IM V35 [1] [2]	Y	–	✓	✓	✓	✓	✓	✓	✓	✓	✓	✓	✓	✓	✓	–	Not for:	frame size 315 (2-pole); 315 L and 355

For legends and footnotes, see page 6/85.

© Innomotics 2024

Innomotics XP 1MB1, 1MB5 explosion-protected motors

Cast-iron series 1MB.55., 1MB.853, 1MB.56., 1MB.863

Types of construction	Article No. supplement: Type of construction code letter 14th position of the Article No.	Article No. supplement: For types of construction with order code(s) Article No. with additional identification code -Z	Frame size 71	80	90	100	112	132	160	180	200	225	250	280	315	355	Motor version	
			1MB1.5., 1MB1.6.														IEC	Ex db, Ex db eb IE3 (Zone 1)
														1MB55..				
						1MB18.3												
														1MB58.3				
1MB..5. - . . . . . - . 1MB..6. - . . . . . - . ■	. . (-Z)	Order code																
With flange	**Acc. to EN 50347**		**FT85**	**FT100**	**FT115**	**FT130**	**FT130**	**FT165**	**FT215**	**-**	**-**	**-**	**-**	**-**	**-**	**-**		
	Acc. to DIN 42 948		**C105**	**C120**	**C140**	**C160**	**C160**	**C200**	**C250**	**-**	**-**	**-**	**-**	**-**	**-**	**-**		
IM B14	**K**	**–**	✓	✓	✓	✓	✓	✓	✓	–	–	–	–	–	–	–		
IM V19 [2]	**L**	**–**	✓	✓	✓	✓	✓	✓	✓	–	–	–	–	–	–	–		
IM V18 with protective cover [1] [2] 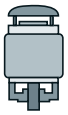	**M**	**H00**	✓	✓	✓	✓	✓	✓	✓	–	–	–	–	–	–	–		
IM B34	**N**	**–**	✓	✓	✓	✓	✓	✓	✓	–	–	–	–	–	–	–		
IM V17 [2]	**X**	**H00**	✓	✓	✓	✓	✓	✓	✓	–	–	–	–	–	–	–		
With flange next largest	**Acc. to EN 50347**		**FT115**	**FT130**	**FT130**	**FT165**	**FT165**	**FT215**	**-**	**-**	**-**	**-**	**-**	**-**	**-**	**-**		
	Acc. to DIN 42 948		**C140**	**C160**	**C160**	**C200**	**C200**	**C250**	**-**	**-**	**-**	**-**	**-**	**-**	**-**	**-**		
IM B14	**K**	**P01**	✓	✓	✓	✓	✓	✓	–	–	–	–	–	–	–	–		
IM V19 [2]	**L**	**P01**	✓	✓	✓	✓	✓	✓	–	–	–	–	–	–	–	–		
IM V18 with protective cover [1] [2] 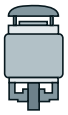	**M**	**P01+H00**	✓	✓	✓	✓	✓	✓	–	–	–	–	–	–	–	–	Not for:	frame size 315 L
IM B34	**N**	**P01**	✓	✓	✓	✓	✓	✓	–	–	–	–	–	–	–	–		
IM V17 [2]	**X**	**P01+H00**	✓	✓	✓	✓	✓	✓	–	–	–	–	–	–	–	–		

☐ Standard version
✓ With additional charge
– Not possible

[1] The "Standard cylindrical shaft extension (second shaft extension)" option (order code **L05**) is not possible.

[2] The following applies for explosion-protected motors: In the case of the types of construction with shaft extension down, the version "with protective cover" is required. For types of construction with shaft extension pointing upwards, a suitable cover must be implemented to prevent small parts from falling into the fan cover (see the standard IEC/EN 60079-0). The cover must not block the cooling air flow.

© Innomotics 2024

Innomotics XP 1MB1, 1MB5 explosion-protected motors

Cast-iron series 1MB55.4, 1MB55.3, 1MB58.3

Selection and ordering data

Types of construction	Article No. supplement: Type of construction code letter 14th position of the Article No.	Article No. supplement: For types of construction with order code(s) Article No. with additional identification code -Z	Frame size 315	355	400	450	Motor version		
			1MB55 . 4				IEC	Ex ec, Ex tc, Ex tb (Zonen 2, 22 und 21)	IE4
			1MB55 . 3						IE3
					1MB58 . 3				
1MB5 . . . - . . . . . - .	■ . . (-Z)	Order code							
Without flange									
IM B3 [1) 2)]	**A**	**–**	□	□	□	□			
IM B6 [3)] 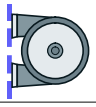	**T**	**–**	O	O	–	–			
IM B7 [3)] 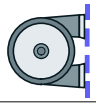	**U**	**–**	O	O	–	–			
IM B8 [3)]	**V**	**–**	O	O	–	–			
IM V6 [2)]	**D**	**–**	O	O	O. R. [7)]	O. R. [7)]			
IM V5 without protective cover [2) 3)]	**C**	**–**	O	O	O. R. [7)]	O. R. [7)]			
IM V5 with protective cover [2) 3) 4) 5)]	**C**	**H00**	✓	✓	O. R. [7)]	O. R. [7)]			

For legends and footnotes, see page 6/87.

© Innomotics 2024

Innomotics XP 1MB1, 1MB5 explosion-protected motors

Cast-iron series 1MB55.4, 1MB55.3, 1MB58.3

Types of construction	Article No. supplement: Type of construction code letter 14th position of the Article No.	Article No. supplement: For types of construction with order code(s) Article No. with additional identification code **-Z**	Frame size 315	355	400	450	Motor version		
			1MB55 . 4				IEC	Ex ec, Ex tc, Ex tb (Zonen 2, 22 und 21)	IE4
			1MB55 . 3						IE3
					1MB58 . 3				
1MB5 . . . - . . . . . - .	**■ . . (-Z)**	Order code							
With flange	**EN 50347 DIN 42948**		**FF600 A 660**	**FF740 A 800**	**FF940 A 1000**	**FF1080 A 1150**			
IM B5 [2) 8)] 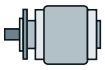	**F**	**–**	✓	✓	✓ [7)]	✓ [7)]			
IM V1 without protective cover [2) 3)]	**G**	**–**	✓	✓	✓ [7)]	✓ [7)]			
IM V1 with protective cover [2) 3) 4) 5)]	**G**	**H00**	✓	✓	✓ [7)]	✓ [7)]			
IM V3 [3)]	**H**		✓	✓	–	–			
IM B35 [4)] 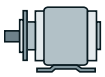	**J**	**–**	✓	✓	✓	✓			

☐ Standard version
○ Without additional charge
✓ With additional charge

6

1) The types of construction IM B6/7/8, IM V6 and IM V5 with/without protective cover are also possible as long as no stamping of these types of construction on the rating plate is required. As standard the type of construction IM B3 is then stamped on the rating plate. With type of construction IM V5 with protective cover, the protective cover has to be additionally ordered with order code **H00**. The protective cover is not stamped on the rating plate.

2) The type of construction is stamped on the rating plate. If mounted in a different position, the position must be specified to ensure that the condensation drainage holes are positioned correctly.

3) The following applies for explosion-protected motors: In the case of the types of construction with shaft extension down, the version "with protective cover" is required. For types of construction with shaft extension pointing upwards, a suitable cover must be implemented to prevent small parts from falling into the fan cover (see the standard IEC/EN 60079-0). The cover must not block the cooling air flow.

4) In combination with an encoder, it is not necessary to order the protective cover (order code **H00**), as this is delivered as a protection for the encoder as standard. In this case the protective cover is standard design (without additional charge).

5) The "Standard cylindrical shaft extension (second shaft extension)" option (order code **L05**) is not possible.

6) Not available for 2-pole motors.

7) The types of construction IM V3 and IM V1 with/without protective cover are also possible as long as no stamping of these types of construction on the rating plate is required. As standard the type of construction IM B5 is then stamped on the rating plate. With type of construction IM V1 with protective cover, the protective cover has to be additionally ordered with order code **H00**. The protective cover is not stamped on the rating plate.

8) For machines, type of construction IM B5, provide an additional support foot at the NDE. The support foot is not included in the scope of supply. Use an appropriately sized support foot with the appropriate rigidity.
The support foot must be able to support the total weight of the machine.

© Innomotics 2024

Innomotics XP 1MB1, 1MB5 explosion-protected motors

Aluminum series 1MB10

Selection and ordering data

Motor protection	Article No. supplement: Motor protection code letter 15th position of the Article No.	Article No. supplement: Additional identification code with order code and plain text, if required	Frame size 63	71	80	90	100	112	132	160	Motor version
					1MB10.3						IEC: Ex tb (Zone 21), Ex tc (Zone 22), Ex ec (Zone 2): IE3
			1MB10.1								IE2
							1MB10.2				IE1
1MB10 . . - . . . . . - . .	■ .	Order code									
Motor protection											
None (standard)	**A**	–	☐	☐	☐	☐	☐	☐	☐	☐	
3 PTC thermistors – for tripping (2 terminals) [1]	**B**	–	✓	✓	✓	✓	✓	✓	✓	✓	
6 PTC thermistors – for warning and tripping (4 terminals) [1]	**C**	–	✓	✓	✓	✓	✓	✓	✓	✓	
3 Pt100 resistance thermometers (6 terminals) [1] [2]	**H**	–	–	–	–	–	✓	✓	✓	✓	
1 Pt1000 resistance thermometer (2 terminals) [1]	**K**	**Q35**	✓	✓	✓	✓	✓	✓	✓	✓	
2 Pt1000 resistance thermometers (4 terminals) [1]	**L**	**Q36**	✓	✓	✓	✓	✓	✓	✓	✓	

☐ Standard version
✓ With additional charge
– Not possible

6

[1] Evaluation with associated tripping unit (see Catalog IC 10) is recommended. In converter operation, PTC thermistor motor protection is always required.

[2] In combination with the 15th position of the Article No. "**H**", the order codes **Q02** and **Q03** are not possible for frame sizes 100 to 160. It can only be supplied with a star or delta winding for direct switch-on (3 terminals).

© Innomotics 2024

Selection and ordering data

Motor protection	Article No. supplement: Motor protection code letter 15th position of the Article No.	Article No. supplement: Additional identification code with order code and plain text, if required	Frame size 71	80	90	100	112	132	160	180	200	225	250	280	315	Motor version		
			1MB15.3 Basic Line													IEC	Ex tb (Zone 21), Ex tc (Zone 22), Ex ec (Zone 2)	IE3
						1MB16.3 Performance Line												
			1MB15.1 Basic Line															IE2
						1MB16.1 Performance Line												
1MB15 . . - . . . . . - . .	■ .																	
1MB16 . . - . . . . . - . .	■ .	Order code																
Motor protection																		
None (standard)	**A**	**–**	☐	☐	☐	☐	☐	☐	☐	☐	☐	☐	☐	☐	☐	Only for:	1MB15.. Basic Line	
3 PTC thermistors – for tripping (2 terminals) [1]	**B**	**–**	✓	✓	✓	✓	✓	✓	✓	✓	✓	✓	✓	✓	✓			
6 PTC thermistors – for warning and tripping (4 terminals) [2]	**C**	**–**	✓	✓	✓	✓	✓	✓	✓	✓	✓	✓	✓	✓	✓	Only for:	1MB15.. Basic Line	
			–	–	–	☐	☐	☐	☐	☐	☐	☐	☐	☐	☐	Only for:	MB16.. Performance Line	
3 Pt100 resistance thermometers – 2-wire input (6 terminals) [2] [3]	**H**	**Q60**	✓	✓	✓	✓	✓	✓	✓	✓	✓	✓	✓	✓	✓			
6 Pt100 resistance thermometers (12 terminals) [2]	**J**	**Q61**	–	–	–	–	–	–	–	✓	✓	✓	✓	✓	✓			
1 Pt1000 resistance thermometer (2 terminals) [2]	**K**	**Q35**	✓	✓	✓	✓	✓	✓	✓	✓	✓	✓	✓	✓	✓			
2 Pt1000 resistance thermometers (4 terminals) [2]	**L**	**Q36**	✓	✓	✓	✓	✓	✓	✓	✓	✓	✓	✓	✓	✓			
3 Pt100 resistance thermometers (9 terminals) [4] [5]	**Q**	**Q63**	–	–	–	–	–	–	✓	✓	✓	✓	✓	✓	✓			
6 Pt100 resistance thermometers (18 terminals) [4] [5]	**R**	**Q64**	–	–	–	–	–	–	–	✓	✓	✓	✓	✓	✓			

☐ Standard version
✓ With additional charge
– Not possible

6

[1] For the Performance Line, motor protection by means of PTC thermistors with 3 built-in temperature sensors for tripping (motor protection code letter B) is already included in the basic price. For the Performance Line, the option "without motor protection" (motor protection code letter A) is not possible.

[2] Evaluation with associated tripping unit (see Catalog IC 10) is recommended. In converter operation, PTC thermistor motor protection is always required.

[3] In combination with the 15th position of the Article No. "**H**", the order codes **Q02** and **Q03** are not possible for frame sizes 100 to 160. It can only be supplied with a star or delta winding for direct switch-on (3 terminals).

[4] Maximum number of terminals for accessories, see the terminal box concept.

[5] Auxiliary terminal box required; option in Ex eb with order code **R62** or **R63**.

© Innomotics 2024

Innomotics XP 1MB1, 1MB5 explosion-protected motors

Cast-iron series 1MB.543 Basic Line and 1MB.643 Performance Line

Selection and ordering data

Motor protection	Article No. supplement: Motor protection code letter 15th position of the Article No.	Article No. supplement: Additional identification code with order code and plain text, if required	Frame size 71	80	90	100	112	132	160	180	200	225	250	280	315	Motor version		
			1MB1543 Basic Line													IEC	Ex eb (Zone 1)	IE3
						1MB1643 Performance Line												
											1MB5543 Basic Line							
											1MB5643 Performance Line							
1MB1.43 - . . . . . - . .	■ .																	
1MB5.43 - . . . . . - . .	■ .	Order code																
Motor protection																		
Without (standard) [1]	**A**	**–**	☐	☐	☐	☐	☐	☐	☐	☐	☐	☐	☐	☐	☐	Only for:	1MB.5.. Basic Line	
3 PTC thermistors – for tripping (2 terminals) [1] [2] [3]	**B**	**–**	✓	✓	✓	✓	✓	✓	✓	✓	✓	✓	✓	✓	✓	Only for:	1MB.5.. Basic Line	
			☐	☐	☐	☐	☐	☐	☐	☐	☐	☐	☐	☐	☐	Only for:	MB.6.. Performance Line	
6 PTC thermistors – for warning and tripping (4 terminals) [2] [3]	**C**	**–**	✓	✓	✓	✓	✓	✓	✓	✓	✓	✓	✓	✓	✓			
3 Pt100 resistance thermometers (9 terminals) [4] [5]	**Q**	**Q63**	–	–	–	–	–	–	✓	✓	✓	✓	✓	✓	✓			
6 Pt100 resistance thermometers (18 terminals) [4] [5]	**R**	**Q64**	–	–	–	–	–	–	–	✓	✓	✓	✓	✓	✓			

☐ Standard version
✓ With additional charge

6

[1] For the Performance Line, motor protection by means of PTC thermistors with 3 built-in temperature sensors for tripping (motor protection code letter B) is already included in the basic price. For the Performance Line, the option "without motor protection" (motor protection code letter A) is not possible.

[2] Evaluation with associated tripping unit (see Catalog IC 10) is recommended.

[3] Motors in these frame sizes have a second rating plate (T1/T2 and T3) as standard. The T3 power is stamped on the rating plate as standard if the following motors are selected with PTC thermistor (protection by PTC thermistor only) or voltage code "**90**":
– 2-pole motors: Frame sizes 132 to 160
– 4-pole motors: Frame size 180
Alternatively, with order code **B33,** the "T1/T2 power is stamped on the rating plate".
– 2-pole motors: Frame sizes 132 to 200
– 4-pole motors: Frame sizes 180 to 200

[4] Maximum number of terminals for accessories, see the terminal box concept.

[5] Auxiliary terminal box required; option in Ex eb with order code **R62** or **R63**.

© Innomotics 2024

Innomotics XP 1MB1, 1MB5 explosion-protected motors

Selection and ordering data

Motor protection	Article No. supplement: Motor protection code letter 15th position of the Article No.	Article No. supplement: Additional identification code with order code and plain text, if required	Frame size 71	80	90	100	112	132	160	180	200	225	250	280	315	355	Motor version		
1MB..5. - . . . . . - . .			1MB1.5., 1MB1.6.														IEC	Ex db, Ex db eb (Zone 1)	IE3
													1MB55..						
						1MB18.3													
													1MB58.3						
1MB..6. - . . . . . - . .	■ .	Order code																	
Motor protection																			
None (standard)	**A**	**–**	☐	☐	☐	☐	☐	☐	☐	☐	☐	☐	☐	☐	☐	☐			
3 PTC thermistors – for tripping (2 terminals) [1]	**B**	**–**	✓	✓	✓	✓	✓	✓	✓	✓	✓	✓	✓	✓	✓	✓			
6 PTC thermistors – for warning and tripping (4 terminals) [1] [2]	**C**	**–**	✓	✓	✓	✓	✓	✓	✓	✓	✓	✓	✓	✓	✓	✓			
3 Pt100 resistance thermometers (6 terminals) [2]	**H**	**Q60**	–	–	–	✓	✓	✓	✓	✓	✓	✓	✓	✓	✓	✓			
6 Pt100 resistance thermometers (12 terminals) [2] [3]	**J**	**Q61**	–	–	–	–	–	–	–	✓	✓	✓	✓	✓	✓	✓			
			–	–	–	–	–	–	✓	✓	✓	✓	✓	✓	✓	✓	Only for:	Motors with option code R50	
			–	–	–	✓	✓	✓	✓	✓	✓	✓	✓	✓	✓	✓	Only for:	Motors with option code R54	
1 Pt1000 resistance thermometers (2 terminals)	**K**	**Q35**	✓	✓	✓	✓	✓	✓	✓	✓	✓	✓	✓	✓	✓	✓			
2 Pt1000 resistance thermometers (4 terminals) [2]	**L**	**Q36**	✓	✓	✓	✓	✓	✓	✓	✓	✓	✓	✓	✓	✓	✓			
3 Pt100 resistance thermometers (9 terminals) [2] [3]	**Q**	**Q63**	–	–	–	–	–	–	✓	✓	✓	✓	✓	✓	✓	✓			
			–	–	–	✓	✓	✓	✓	✓	✓	✓	✓	✓	✓	–	Only for:	Motors with option code R50 or R54	
6 Pt100 resistance thermometers (18 terminals) [2] [3]	**R**	**Q64**	–	–	–	–	–	–	–	✓	✓	✓	✓	✓	✓	✓			
			–	–	–	–	–	–	✓	✓	✓	✓	✓	✓	✓	✓	Only for:	Motors with option code R50	
			–	–	–	–	–	✓	✓	✓	✓	✓	✓	✓	✓	✓	Only for:	Motors with option code R54	

☐ Standard version
✓ With additional charge
– Not possible

[1] Evaluation with associated tripping unit (see Catalog IC 10) is recommended. In converter operation, PTC thermistor motor protection is always required.
[2] Maximum number of terminals for accessories, see the terminal box concept.
[3] Auxiliary terminal box required; option in Ex eb with order code **R62** or **R63**.

© Innomotics 2024

Innomotics XP 1MB1, 1MB5 explosion-protected motors

Cast-iron series 1MB55.4, 1MB55.3, 1MB58.3

Selection and ordering data

Motor protection	Article No. supplement: Motor protection code letter 15th position of the Article No.	Article No. supplement: Additional identification code with order code and plain text, if required	Frame size 315	355	400	450	Motor version		
			1MB55 . 4				IEC	Ex ec, Ex tc, Ex tb (Zonen 2, 22 und 21)	IE4
			1MB55 . 3						IE3
					1MB58 . 3				
1MB5 . . . - . . . . . - . . ■ .		Order code							
Motor protection									
None (standard)	A	–			☐	☐			
1 or 3 PTC thermistors – for tripping (2 terminals) [1]	B	–	✓	✓	✓	✓			
2 or 6 PTC thermistors – for alarm and tripping (4 terminals) [1]	C	–	✓	✓	✓	✓			
3 Pt100 resistance thermometers (6 terminals)	H	Q60	✓	✓	✓	✓			
6 Pt100 resistance thermometers (12 terminals)	J	Q61	✓	✓	✓	✓			
1 Pt1000 resistance thermometer (2 terminals)	K	Q35	✓	✓	✓	✓			
2 Pt1000 resistance thermometers (4 terminals)	L	Q36	✓	✓	✓	✓			
1 Pt100 resistance thermometer (2 terminals)	P	–	✓	✓	✓	✓			
3 Pt100 resistance thermometers (9 terminals)	Q	Q63	✓	✓	✓	✓			
6 Pt100 resistance thermometers (18 terminals)	R	Q64	✓	✓	✓	✓			

☐ Standard version
✓ With additional charge

Note:
Options are available specifically for bearing protection – for order codes and descriptions, see from page 6/116.

[1] Evaluation with associated tripping unit (see Catalog IC 10) is recommended. In converter operation, PTC thermistor motor protection is always required.

© Innomotics 2024

Innomotics XP 1MB1, 1MB5 explosion-protected motors

Selection and ordering data

Terminal box position	Article No. supplement		Frame size								Motor version		
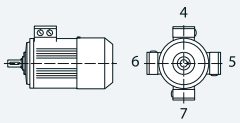	Terminal box position code 16th position of the Article No.	Additional identification code with order code and plain text, if required	63	71	80	90	100	112	132	160			
					1MB10.3						IEC	Ex tb (Zone 21), Ex tc (Zone 22), Ex ec (Zone 2)	IE3
			1MB10.1										IE2
							1MB10.2						IE1
1MB10 . . - . . . . . - . . . ■		Order code											
Terminal box position													
Terminal box top [1]	**4**	–	☐	☐	☐	☐	☐	☐	☐	☐			
Terminal box right-hand side [2]	**5**	–	–	–	✓	✓	✓	✓	✓	✓			
Terminal box left-hand side [2]	**6**	–	–	–	✓	✓	✓	✓	✓	✓			
Terminal box at bottom [2] [3]	**7**	–	–	–	–	–	✓	✓	✓	✓			

☐ Standard version
✓ With additional charge

6

[1] For types of construction with feet, cast feet are standard.
[2] For types of construction with feet, screwed-on feet are standard.
[3] Not generally possible for motors with feet.

© Innomotics 2024

Innomotics XP 1MB1, 1MB5 explosion-protected motors

Cast-iron series 1MB15 Basic Line, 1MB16 Performance Line

Selection and ordering data

Terminal box position	Article No. supplement: Terminal box position code 16th position of the Article No.	Additional identification code with order code and plain text, if required	Baugröße 71	80	90	100	112	132	160	180	200	225	250	280	315	Motorausführung		
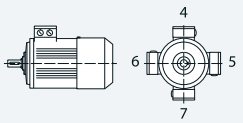			1MB15.3 Basic Line													IEC	Ex tb (Zone 21), Ex tc (Zone 22), Ex ec (Zone 2)	IE3
						1MB16.3 Performance Line												
			1MB15.1 Basic Line															IE2
						1MB16.1 Performance Line												
1MB15 . . - . . . . . - . . . ■																		
1MB16 . . - . . . . . - . . . ■		Order code																
Terminal box position																		
Terminal box top [1]	**4**	**–**	☐	☐	☐	☐	☐	☐	☐	☐	☐	☐	☐	☐	☐			
Terminal box right-hand side [2]	**5**	**–**	–	✓	✓	✓	✓	✓	✓	✓	✓	✓	✓	✓	✓			
Terminal box left-hand side [2]	**6**	**–**	–	✓	✓	✓	✓	✓	✓	✓	✓	✓	✓	✓	✓			
Terminal box bottom [3]	**7**	**–**	–	–	–	✓	✓	✓	✓	–	–	–	–	–	–			

☐ Standard version
✓ With additional charge
– Not possible

[1] For types of construction with feet, cast feet are standard.
[2] For types of construction with feet, screwed-on feet are standard.
[3] Not generally possible for motors with feet.

© Innomotics 2024

Innomotics XP 1MB1, 1MB5 explosion-protected motors

Selection and ordering data

Terminal box position	Article No. supplement: Terminal box position code 16th position of the Article No.	Article No. supplement: Additional identification code with order code and plain text, if required	Frame size 71	80	90	100	112	132	160	180	200	225	250	280	315	Motor version: IEC	Ex eb (Zone 1)	IE3
			1MB1543 Basic Line															
						1MB1643 Performance Line												
											1MB5543 Basic Line							
											1MB5643 Performance Line							
1MB1.43 - . . . . . - . . ■																		
1MB5.43 - . . . . . - . . ■		Order code																
Terminal box position																		
Terminal box base left with terminal box at the top	0	–	–	–	–	–	–	–	–	–	–	–	–	–	✓			
Terminal box base right with terminal box at the top	1	–	–	–	–	–	–	–	–	–	–	–	–	–	✓			
Terminal box base left with oblique terminal box 45°	2	–	–	–	–	–	–	–	–	–	–	–	–	–	○			
Terminal box base right with oblique terminal box 45°	3	–	–	–	–	–	–	–	–	–	–	–	–	–	□			
Terminal box top [1]	4	–	□	□	□	□	□	□	□	□	□	□	□	□	–			
Terminal box right-hand side [2]	5	–	–	✓	✓	✓	✓	✓	✓	✓	✓	✓	✓	✓	✓			
Terminal box left-hand side [2]	6	–	–	✓	✓	✓	✓	✓	✓	✓	✓	✓	✓	✓	✓			
Terminal box at bottom [2] [3]	7	–	–	–	–	✓	✓	✓	✓	–	–	–	–	–	–			
Terminal box on left-hand side (base below)	9	R5L	–	–	–	–	–	–	–	–	–	–	–	–	✓			
Terminal box on right-hand side (base below)	9	R6R	–	–	–	–	–	–	–	–	–	–	–	–	✓			
Terminal box bottom left	9	R7L	–	–	–	–	–	–	–	–	–	–	–	–	✓			
Terminal box bottom right	9	R7R	–	–	–	–	–	–	–	–	–	–	–	–	✓			

□ Standard version
○ Without additional charge
✓ With additional charge
– Not possible

[1] For types of construction with feet, cast feet are standard. Screwed-on feet are available with order code **H01**.

[2] For types of construction with feet, screwed-on feet are standard.

[3] Not generally possible for motors with feet.

© Innomotics 2024

Innomotics XP 1MB1, 1MB5 explosion-protected motors

Cast-iron series 1MB.55., 1MB.853, 1MB.56., 1MB.863

Selection and ordering data

Terminal box position	Article No. supplement: Terminal box position code 16th position of the Article No.	Article No. supplement: Additional identification code with order code and plain text, if required	Baugröße 71	80	90	100	112	132	160	180	200	225	250	280	315	355	Motorausführung		
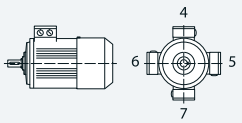			1MB1.5., 1MB1.6.														IEC	Ex db, Ex db eb (Zone 1)	IE3
														1MB55..					
						1MB18.3													
														1MB58.3					
1MB.5.. - ..... - ... ■		Order code																	
1MB.6.. - ..... - ... ■		Order code																	
Terminal box position																			
Terminal box top [1]	4	–	☐	☐	☐	☐	☐	☐	☐	☐	☐	☐	☐	☐	☐	☐			
Terminal box right-hand side [1]	5	–	–	–	–	–	–	✓	✓	✓	✓	✓	✓	✓	✓	✓			
Terminal box left-hand side [1]	6	–	–	–	–	–	–	✓	✓	✓	✓	✓	✓	✓	–	–			
Terminal box bottom [2]	7	–	–	–	–	✓	✓	✓	✓	–	–	–	–	–	–	–			

☐ Standard version
✓ With additional charge
– Not possible

Standard version:
Cable entry from right, as seen looking onto the shaft, with terminal box position left, entry from below, on frame size 355 and with terminal box on the right-hand side, cable entry is from the NDE.

Note:
Flange mounted motors horizontal alignment can also be mounted with connection box position on right-hand side, left-hand side or bottom during installation.

[1] For types of construction with feet, cast feet are standard.
[2] Not generally possible for motors with feet.

© Innomotics 2024

Innomotics XP 1MB1, 1MB5 explosion-protected motors

Selection and ordering data

Terminal box position	Article No. supplement		Frame size				Motor version		
	Terminal box position code 16th position of the Article No.	Additional identification code with order code and plain text, if required	315	355	400	450			
			1MB55 . 4				IEC	Ex ec, Ex tc, Ex tb (Zonen 2, 22 und 21)	IE4
			1MB55 . 3						IE3
					1MB58 . 3				
1MB5 . . . - . . . . . - . . . ■		Order code							
Terminal box position									
Terminal box base left with terminal box at the top	**0**	–	✓	✓	✓	✓			
Terminal box base right with terminal box at the top	**1**	–	✓	✓	✓	✓			
Terminal box base left with oblique terminal box 45°	**2**	–	○	○	○	○			
Terminal box base right with oblique terminal box 45°	**3**	–	□	□	□	□			
Terminal box on right-hand side	**5**	–	✓	✓	✓	✓			
Terminal box on left-hand side	**6**	–	✓	✓	✓	✓			
Terminal box left-hand side (base below) [1]	**9**	**R5L**	✓	✓	✓	✓			
Terminal box right-hand side (base below) [1]	**9**	**R6R**	✓	✓	✓	✓			
Terminal box bottom left [1]	**9**	**R7L**	✓	✓	✓	✓			
Terminal box bottom right [1]	**9**	**R7R**	✓	✓	✓	✓			

□ Standard version
○ Without additional charge
✓ With additional charge

6

[1] Only possible in combination with type of construction IM V1.

© Innomotics 2024

Innomotics XP 1MB1, 1MB5 explosion-protected motors

Aluminum series 1MB10

Selection and ordering data

Special versions	Additional identification code -Z with order code and plain text if required	Frame size 63	71	80	90	100	112	132	160	Motor version		
				1MB10.3						IEC	Ex tb (Zone 21), Ex tc (Zone 22), Ex ec (Zone 2)	IE3
		1MB10.1										IE2
						1MB10.2						IE1
1MB10 . . - . . . . . - . . . . -Z	Order code											
Explosion-protected version												
Version additionally for dust Ex tc – Zone 22	**B30**	–	–	✓	✓	✓	✓	✓	✓	Only for:	1MB103. – Ex ec (Zone 2)	
Version IIC with stamping of IIB	**B31**	○	○	○	○	○	○	○	○	Only for:	1MB103. – Ex ec (Zone 2)	
VIK version	**C02**	✓	✓	✓	✓	✓	✓	✓	✓			
Version for converter operation												
Version for converter operation in basic version with operating data SINAMICS G120 with PM240-2.	**B40**	✓	✓	✓	✓	✓	✓	✓	✓			
Version for converter operation in basic version with operating data SINAMICS S150	**B41**	✓	✓	✓	✓	✓	✓	✓	✓			
Version for converter operation with power data on the PWM converter	**B43**	✓	✓	✓	✓	✓	✓	✓	✓			
Operating data such as the **B40** order code with alternative SINAMICS converter on the rating plate _ G120 with PM230 _ G120 with PM240 _ G120C _ G120P with PM230 _ G120P with PM240-2 _ G120P with PM240P-2 _ G120P with PM330 _ G130, G150, G180 _ S120 (BLM/SLM) _ V20 Operating data such as order code **B41** with alternative SINAMICS converters on the rating plate _ S120 (ALM)	**Y68 •** and converter type	○	○	○	○	○	○	○	○			
Motor protection												
1 or 3 PTC thermistors – for tripping (2 terminals)	**Q11**	✓	✓	–	–	–	–	–	–			
2 or 6 PTC thermistors – for alarm and tripping (4 terminals)	**Q12**	✓	✓	–	–	–	–	–	–			
1 Pt1000 resistance thermometer (2 terminals)	**Q35**	✓	✓	✓	✓	✓	✓	✓	✓			
2 Pt1000 resistance thermometers (4 terminals)	**Q36**	✓	✓	✓	✓	✓	✓	✓	✓			
Motor connection and terminal box												
External grounding		☐	☐	☐	☐	☐	☐	☐	☐			
Connected in star for dispatch	**M01**	✓	✓	✓	✓	✓	✓	✓	✓			
Connected in delta for dispatch	**M02**	✓	✓	✓	✓	✓	✓	✓	✓			
Rotation of the terminal box through 90°, entry from DE	**R10**	○	○	○	○	○	○	○	○			
Rotation of the terminal box through 90°, entry from NDE	**R11**	○	○	○	○	○	○	○	○			
Rotation of the terminal box through 180°	**R12**	○	○	○	○	○	○	○	○			
One EMC cable gland	**R14**	✓	✓	✓	✓	✓	✓	✓	✓			
One metal cable gland	**R15**	✓	✓	✓	✓	✓	✓	✓	✓			
EMC cable gland, maximum configuration	**R16**	✓	✓	✓	✓	✓	✓	✓	✓			
Metal cable gland, maximum configuration	**R18**	✓	✓	✓	✓	✓	✓	✓	✓			
One cable gland for armored cable	**R45**	✓	✓	✓	✓	✓	✓	✓	✓			
Larger terminal box	**R50**	✓	✓	☐	☐	–	–	–	–			
Windings and insulation												
Temperature class 155 (F), utilized acc. to 130 (B), coolant temperature 45 °C, derating approx. 4 %	**N05**	✓	✓	✓	✓	✓	✓	✓	✓			
Temperature class 155 (F), utilized acc. to 130 (B), coolant temperature 50 °C, derating approx. 8 %	**N06**	✓	✓	✓	✓	✓	✓	✓	✓			
Temperature class 155 (F), utilized acc. to 130 (B), coolant temperature 55 °C, derating approx. 13 %	**N07**	✓	✓	✓	✓	✓	✓	✓	✓			

For legends, see page 6/101.

© Innomotics 2024

Innomotics XP 1MB1, 1MB5 explosion-protected motors

Aluminum series 1MB10

Special versions	Additional identification code -Z with order code and plain text if required	Frame size 63	71	80	90	100	112	132	160	Motor version		
				1MB10.3						IEC	Ex tb (Zone 21), Ex tc (Zone 22), Ex ec (Zone 2)	IE3
		1MB10.1										IE2
						1MB10.2						IE1
1MB10 . . - . . . . . - . . . . -Z	Order code											
Windings and insulation (continued)												
Temperature class 155 (F), utilized acc. to 130 (B), coolant temperature 60 °C, derating approx. 18 %	**N08**	✓	✓	✓	✓	✓	✓	✓	✓			
Increased air humidity/temperature with 30 to 60 g water per m³ of air	**N30**	✓	✓	✓	✓	✓	✓	✓	✓			
Increased air humidity/temperature with 60 to 100 g water per m³ of air	**N31**	✓	✓	✓	✓	✓	✓	✓	✓			
Temperature class 155 (F), utilized acc. to 130 (B), with higher coolant temperature and/or installation altitude	**Y50 •** CT .. °C or IA .... m above sea level	✓	✓	✓	✓	✓	✓	✓	✓	Only for:	Installation Altitude < 2000 m	
Colors and paint finish												
Special paint finish in RAL 7030 stone gray		☐	☐	☐	☐	☐	☐	☐	☐			
Unpainted (only cast-iron parts primed)	**S00**	○	○	○	○	○	○	○	○			
Unpainted, only primed	**S01**	✓	✓	✓	✓	✓	✓	✓	✓			
Special paint finish C3	**S02**	✓	✓	✓	✓	✓	✓	✓	✓			
Special paint finish sea air resistant C4	**S03**	✓	✓	✓	✓	✓	✓	✓	✓			
Top coat polyurethane	**S06**	✓	✓	✓	✓	✓	✓	✓	✓	Only for:	1MB103. – Ex ec (Zone 2)	
Paint finish in other standard RAL colors: RAL 1015, 5002, 5009, 5010, 5012, 5015, 6011, 7001, 7011, 7016, 7031, 7032, 7035, 7037, 8012, 9005 (see Catalog Section 1 "Introduction")	**Y53 •** and paint finish RAL	✓	✓	✓	✓	✓	✓	✓	✓			
Paint finish in special RAL colors: For RAL colors, see "Special paint finish in special RAL colors" (see Catalog Section 1 "Introduction")	**Y56 •** and paint finish RAL	✓	✓	✓	✓	✓	✓	✓	✓			
Non-standard colors Colors see "Paint finish in non-standard colors (see Catalog Section 1 "Introduction")	**Y66 •** and paint finish	✓	✓	✓	✓	✓	✓	✓	✓			
Modular technology – Basic versions												
Mounting of separately driven fan	**F70**	–	–	–	–	–	–	–	–	Only for:	1MB101. – Ex tb (Zone 21)	
		–	–	–	–	✓	✓	✓	✓	Only for:	1MB102. – Ex tc (Zone 22), 1MB103. – Ex ec (Zone 2)	
Special technology												
Mounting of LL 841 (HTL); 1024 I explosion-protected rotary pulse encoder	**G30**	–	–	–	–	✓	✓	✓	✓			
Mechanical version and degrees of protection												
Low-noise version for 2-pole motors with clockwise direction of rotation	**F77**	–	–	–	–	–	–	✓	✓			
Low-noise version for 2-pole motors with counterclockwise direction of rotation	**F78**	–	–	–	–	–	–	✓	✓			
Mechanical protection for encoder	**G43**	–	–	☐	☐	☐	☐	☐	☐			
Protective cover	**H00**	✓	✓	✓	✓	✓	✓	✓	✓			
Screwed-on (instead of cast) feet	**H01**	–	–	✓	✓	✓	✓	✓	✓			
Vibration-proof version; vibration resistance to Class 3M4 according to IEC 60721-3-3:1994	**H02**	✓	✓	✓	✓	✓	✓	✓	✓			
Condensation drainage holes	**H03**	✓	✓	✓	✓	✓	✓	✓	✓			
Rust-resistant screws (externally)	**H07**	✓	✓	✓	✓	✓	✓	✓	✓			
IP65 degree of protection	**H20**	✓	✓	✓	✓	✓	✓	✓	✓			
IP56 degree of protection	**H22**	✓	✓	✓	✓	✓	✓	✓	✓			
Drive-end seal for flange-mounting motors, oil-tight to 0.1 bar	**H23**	✓	✓	✓	✓	✓	✓	✓	✓			
Coolant temperature and installation altitude												
Coolant temperature –40 to +40 °C	**D03**	✓	✓	✓	✓	✓	✓	✓	✓			
Versions in accordance with standards and specifications												
Motor without CE marking for export outside EEA (see EU Regulation 2019/1781)	**D22**	–	–	○	○	○	○	○	○	Not for:	1MB103. – Ex ec (Zone 2)	
Motor exclusively according to the Energy-related Products Law, Article 1 dated 27.2.2008, motor to be used in means of transport for persons and goods	**D23**	–	–	○	○	○	○	○	○	Only for:	IE2, IE1	

For legends, see page 6/101.

© Innomotics 2024

Innomotics XP 1MB1, 1MB5 explosion-protected motors

Aluminum series 1MB10

Special versions	Additional identification code -Z with order code and plain text if required	Frame size 63	71	80	90	100	112	132	160	Motor version		
				1MB10.3						IEC	Ex tb (Zone 21), Ex tc (Zone 22), Ex ec (Zone 2)	IE3
		1MB10.1										IE2
						1MB10.2						IE1
1MB10 . . - . . . . . - . . . . -Z	Order code											
Versions in accordance with standards and specifications (continued)												
Ex certification for China	**D32**	–	–	✓	✓	✓	✓	✓	✓			
China Energy Efficiency Label	**D34**	–	–	○	○	○	○	○	○	Only for:	1MB10.3 – Ex ec (Zone 2)	
EAC Ex certificate for the Eurasian Customs Union	**D35**	–	–	✓	✓	✓	✓	✓	✓			
IECEx certification	**D37**	–	–	✓	✓	✓	✓	✓	✓			
MEPS Australia	**D70**	–	–	✓	✓	✓	✓	✓	✓	Only for:	1MB1013, 1MB1023, 1MB1033	
UKCA-Ex-certification		☐	☐	☐	☐	☐	☐	☐	☐			
Bearings and lubrication												
Located bearing DE	**L20**	✓	✓	✓	✓	✓	✓	✓	✓			
Located bearing NDE	**L21**	✓	✓	✓	✓	✓	✓	✓	☐			
Bearing design for increased cantilever forces	**L22**	–	–	–	–	✓	✓	✓	✓			
Regreasing device	**L23**	–	–	–	–	✓	✓	✓	✓			
Bearings reinforced at both ends for DE and NDE, bearing size 63	**L25**	–	–	–	–	✓	✓	✓	✓			
Bearing insulation NDE	**L51**	–	–	–	–	✓	✓	✓	✓			
Measuring nipple for SPM shock pulse measurement for bearing inspection	**Q01**	–	–	–	–	✓	✓	✓	✓			
Balance and vibration severity												
Vibration severity grade A		☐	☐	☐	☐	☐	☐	☐	☐			
Vibration severity grade B	**L00**	✓	✓	✓	✓	✓	✓	✓	✓			
Half-key balancing		☐	☐	☐	☐	☐	☐	☐	☐			
Balancing without feather key	**L01**	✓	✓	✓	✓	✓	✓	✓	✓			
Full-key balancing	**L02**	✓	✓	✓	✓	✓	✓	✓	✓			
Shaft and rotor												
Shaft extension with standard dimensions, without feather keyway	**L04**	–	✓	✓	✓	✓	✓	✓	✓			
Standard, cylindrical shaft extension (second shaft extension) NDE acc. to EN 50347	**L05**	✓	✓	✓	✓	✓	✓	✓	✓			
Standard shaft made of stainless steel (e.g. 1.4021)	**L06**	✓	✓	✓	✓	✓	✓	✓	✓			
Shaft extension run-out in accordance with IEC 60072-1 precision class	**L07**	✓	✓	✓	✓	✓	✓	✓	✓			
Shaft extension run-out, concentricity and perpendicularity in accordance with IEC 60072-1 precision class for flange-mounted motors	**L08**	✓	✓	✓	✓	✓	✓	✓	✓			
Non-standard cylindrical shaft extension, DE	**Y58 •** and customer specifications	✓	✓	✓	✓	✓	✓	✓	✓			
Non-standard cylindrical shaft extension, NDE	**Y59 •** and customer specifications	✓	✓	✓	✓	✓	✓	✓	✓			
Heating and ventilation												
Metal external fan	**F76**	✓	✓	☐	☐	–	–	–	–	Only for:	1MB103. – Ex ec (Zone 2)	
		–	–	☐	☐	✓	✓	✓	✓	Only for:	1MB101. – Ex tb (Zone 21), 1MB102. – Ex tc (Zone 22)	
Anti-condensation heating for 230 V (2 terminals)	**Q02**	✓	✓	✓	✓	✓	✓	✓	✓			
Anti-condensation heating for 115 V (2 terminals)	**Q03**	✓	✓	✓	✓	✓	✓	✓	✓			
Rating plate and additional rating plates												
Second rating plate, loose	**M10**	✓	✓	✓	✓	✓	✓	✓	✓			
Rating plate, stainless steel	**M11**	✓	✓	✓	✓	✓	✓	✓	✓			

For legends, see page 6/101.

© Innomotics 2024

Innomotics XP 1MB1, 1MB5 explosion-protected motors

Aluminum series 1MB10

Special versions	Additional identification code -Z with order code and plain text if required	Frame size 63	71	80	90	100	112	132	160	Motor version		
				1MB10.3						IEC	Ex tb (Zone 21), Ex tc (Zone 22), Ex ec (Zone 2)	IE3
		1MB10.1										IE2
						1MB10.2						IE1
1MB10 . . - . . . . . - . . . . -Z	Order code											
Rating plate and additional rating plates (continued)												
Additional rating plate with deviating rating plate data	**Y80 •** and customer specifications	✓	✓	✓	✓	✓	✓	✓	✓			
Additional rating plate with customer specifications	**Y82 •** and customer specifications	✓	✓	✓	✓	✓	✓	✓	✓			
Additional information on rating plate and on package label (max. 20 characters)	**Y84 •** and customer specifications	✓	✓	✓	✓	✓	✓	✓	✓			
Packaging, safety notes, documentation and test certificates												
Inspection certificate 3.1 according to EN 10204	**B02**	✓	✓	✓	✓	✓	✓	✓	✓			
Document – Electrical datasheet	**B60**	✓	✓	✓	✓	✓	✓	✓	✓			
Document – Order dimensional drawing	**B61**	✓	✓	✓	✓	✓	✓	✓	✓			
Type test with heat run for horizontal motors, with acceptance	**B83**	✓	✓	✓	✓	✓	✓	✓	✓			
"Basic" documentation package	**B90**	✓	✓	✓	✓	✓	✓	✓	✓			
"Advanced" documentation package	**B91**	✓	✓	✓	✓	✓	✓	✓	✓			
"Projects" documentation package	**B92**	✓	✓	✓	✓	✓	✓	✓	✓			
Wire-lattice pallet packaging	**B99**	○	○	○	○	○	○	○	○			

☐ Standard version
○ Without additional charge
• This order code only determines the price of the version – Additional plain text is required.
✓ With additional charge
– Not possible

Note:
The catalog provides an overview of the available motor options but doesn't detail the correct logic combinations.
For a customized selection tailored to your specific requirements, please use the Siemens Product Configurator at the following address: configurator.innomotics.com

© Innomotics 2024

Innomotics XP 1MB1, 1MB5 explosion-protected motors

Cast-iron series 1MB15 Basic Line, 1MB16 Performance Line

Selection and ordering data

Special versions	Additional identification code **-Z** with order code and plain text if required	Frame size													Motor version		
		71	**80**	**90**	**100**	**112**	**132**	**160**	**180**	**200**	**225**	**250**	**280**	**315**			
		1MB15.3 Basic Line													IEC	Ex tb (Zone 21), Ex tc (Zone 22), Ex ec (Zone 2)	IE3
					1MB16.3 Performance Line												
1MB15 . . - . . . . . - . . . . -Z		**1MB15.1 Basic Line**															IE2
1MB16 . . - . . . . . - . . . . -Z	Order code				**1MB16.1 Performance Line**												
Explosion-protected version																	
Version additionally for dust Ex tc – Zone 22	**B30**	✓	✓	✓	✓	✓	✓	✓	✓	✓	✓	✓	✓	✓	Only for:	1MB1.3. – Ex ec (Zone 2)	
Version IIC with stamping of IIB	**B31**	○	○	○	○	○	○	○	○	○	○	○	○	○	Only for:	1MB1.3. – Ex ec (Zone 2)	
VIK version	**C02**	✓	✓	✓	✓	✓	✓	✓	✓	✓	✓	✓	✓	✓			
Chemstar design chemical industry	**C03**	✓	✓	✓	✓	✓	✓	✓	✓	✓	✓	✓	✓	✓			
Chemstar design Oil & Gas industry	**C04**	✓	✓	✓	✓	✓	✓	✓	✓	✓	✓	✓	✓	✓			
Version for converter operation																	
Version for converter operation in basic version with operating data SINAMICS G120 with PM240-2.	**B40**	✓	✓	✓	✓	✓	✓	✓	✓	✓	✓	✓	✓	✓			
Version for converter operation in basic version with operating data SINAMICS S150	**B41**	✓	✓	✓	✓	✓	✓	✓	✓	✓	✓	✓	✓	✓			
Version for converter operation with power data on the PWM converter	**B43**	✓	✓	✓	✓	✓	✓	✓	✓	✓	✓	✓	✓	✓			
Operating data such as order code **B40** with alternative SINAMICS converters on the rating plate _ G120 with PM230 _ G120 with PM240 _ G120C _ G120P with PM230 _ G120P with PM240-2 _ G120P with PM240P-2 _ G120P with PM330 _ G130, G150, G180 _ S120 (BLM/SLM) _ V20 Operating data such as order code **B41** with alternative SINAMICS converters on the rating plate _ S120 (ALM)	**Y68 •** and converter type	○	○	○	○	○	○	○	○	○	○	○	○	○			
Motor protection																	
1 Pt1000 resistance thermometer (2 terminals)	**Q35**	–	–	–	✓	✓	✓	✓	✓	✓	✓	✓	✓	✓			
2 Pt1000 resistance thermometers (4 terminals)	**Q36**	–	–	–	✓	✓	✓	✓	✓	✓	✓	✓	✓	✓			
3 Pt100 resistance thermometers (6 terminals)	**Q60**	–	–	–	✓	✓	✓	✓	✓	✓	✓	✓	✓	✓			
6 Pt100 resistance thermometers (12 terminals)	**Q61**	–	–	–	–	–	–	–	✓	✓	✓	✓	✓	✓			
3 Pt100 resistance thermometers (9 terminals)	**Q63**	–	–	–	–	–	–	✓	✓	✓	✓	✓	✓	✓			
6 Pt100 resistance thermometers (18 terminals)	**Q64**	–	–	–	–	–	–	–	✓	✓	✓	✓	✓	✓			
2 Pt100 resistance thermometers in basic configuration for bearings (4 terminals)	**Q72**	–	–	–	–	–	–	–	✓	✓	✓	✓	✓	✓			
2 Pt100 resistance thermometers for bearings (6 terminals)	**Q78**	–	–	–	–	–	–	–	✓	✓	✓	✓	✓	✓			
2 Pt100 double resistance thermometers for bearings (12 terminals)	**Q79**	–	–	–	–	–	–	–	–	–	–	–	✓	✓			
Motor connection and terminal box																	
External grounding		□	□	□	□	□	□	□	□	□	□	□	□	□			
Connected in star for dispatch	**M01**	✓	✓	✓	✓	✓	✓	✓	✓	✓	✓	✓	✓	✓			
Connected in delta for dispatch	**M02**	✓	✓	✓	✓	✓	✓	✓	✓	✓	□	□	□	□			
Rotation of the terminal box through 90°, entry from DE	**R10**	○	○	○	○	○	○	○	✓	✓	✓	✓	✓	✓	Not for:	Combination with type of construction code letters F, G (14th position of the Article No.)	
Rotation of the terminal box through 90°, entry from NDE	**R11**	○	○	○	○	○	○	○	✓	✓	✓	✓	✓	✓			
Rotation of the terminal box through 180°	**R12**	○	○	○	○	○	○	○	✓	✓	✓	✓	✓	✓			
One EMC cable gland	**R14**	✓	✓	✓	✓	✓	✓	✓	✓	✓	✓	✓	✓	✓			
One metal cable gland	**R15**	○	○	○	○	○	○	○	○	○	○	○	○	○			
EMC cable gland, maximum number of components	**R16**	✓	✓	✓	✓	✓	✓	✓	✓	✓	✓	✓	✓	✓			

For legends, see page 6/106.

© Innomotics 2024

Innomotics XP 1MB1, 1MB5 explosion-protected motors

Cast-iron series 1MB15 Basic Line, 1MB16 Performance Line

Special versions	Additional identification code -Z with order code and plain text if required	Frame size 71	80	90	100	112	132	160	180	200	225	250	280	315	Motor version		
		1MB15.3 Basic Line													IEC	Ex tb (Zone 21), Ex tc (Zone 22), Ex ec (Zone 2)	IE3
					1MB16.3 Performance Line												
1MB15 . . - . . . . . - . . . . -Z		1MB15.1 Basic Line															IE2
1MB16 . . - . . . . . - . . . . -Z	Order code				1MB16.1 Performance Line												
Motor connection and terminal box (continued)																	
Stud terminal for cable connection, accessories pack (3 items)	**R17**	–	–	–	–	–	–	–	–	–	–	✓	✓	✓	Only for:	1MB1.1. – Ex tb (Zone 21), 1MB1.2. – Ex tc (Zone 22)	
Metal cable gland, maximum configuration	**R18**	✓	✓	✓	✓	✓	✓	✓	✓	✓	✓	✓	✓	✓			
Saddle terminal for connection without cable lug, accessories pack	**R19**	–	–	–	–	–	–	–	–	–	–	✓	✓	✓	Only for:	1MB1.1. – Ex tb (Zone 21), 1MB1.2. – Ex tc (Zone 22)	
		☐	☐	☐	☐	☐	☐	☐	☐	☐	☐	☐	☐	☐	Only for:	1MB1.3. – Ex ec (Zone 2)	
One cable gland for armored cable	**R45**	✓	✓	✓	✓	✓	✓	✓	✓	✓	✓	✓	✓	✓			
Larger terminal box	**R50**	✓	✓	✓	✓	✓	✓	✓	✓	✓	✓	✓	✓	✓			
Drilled removable entry plate	**R52**	–	–	–	–	–	–	–	✓	✓	✓	✓	✓	✓			
Cast-iron auxiliary terminal box (small)	**R62**	–	–	–	–	–	–	–	✓	✓	✓	✓	✓	✓			
Cast-iron auxiliary terminal box (large)	**R63**	–	–	–	–	–	–	–	–	–	–	✓	✓	✓			
2 small cast-iron auxiliary terminal boxes	**R67**	–	–	–	✓	✓	✓	✓	✓	✓	✓	✓	✓	✓			
2 big cast-iron auxiliary terminal boxes	**R68**	–	–	–	–	–	–	–	–	–	–	✓	✓	✓			
Windings and insulation																	
Temperature class 155 (F), utilized acc. to 130 (B), coolant temperature 45 °C, derating approx. 4 %	**N05**	✓	✓	✓	✓	✓	✓	✓	✓	✓	✓	✓	✓	✓			
Temperature class 155 (F), utilized acc. to 130 (B), coolant temperature 50 °C, derating approx. 8 %	**N06**	✓	✓	✓	✓	✓	✓	✓	✓	✓	✓	✓	✓	✓			
Temperature class 155 (F), utilized acc. to 130 (B), coolant temperature 55 °C, derating approx. 13 %	**N07**	✓	✓	✓	✓	✓	✓	✓	✓	✓	✓	✓	✓	✓			
Temperature class 155 (F), utilized acc. to 130 (B), coolant temperature 60 °C, derating approx. 18 %	**N08**	✓	✓	✓	✓	✓	✓	✓	✓	✓	✓	✓	✓	✓			
Increased air humidity/temperature with 30 to 60 g water per m^3 of air	**N30**	✓	✓	✓	✓	✓	✓	✓	✓	✓	✓	✓	✓	✓			
Increased air humidity/temperature with 60 to 100 g water per m^3 of air	**N31**	✓	✓	✓	✓	✓	✓	✓	✓	✓	✓	✓	✓	✓			
Temperature class 155 (F), utilized acc. to 130 (B), with higher coolant temperature and/or installation altitude	**Y50 •** CT .. °C or IA .... m above sea level	✓	✓	✓	✓	✓	✓	✓	✓	✓	✓	✓	✓	✓	Only for:	Installation Altitude < 2000 m	
Colors and paint finish																	
Standard paint finish C2 in RAL 7030 stone gray		☐	☐	☐	☐	☐	☐	☐	☐	☐	☐	☐	☐	☐	Only for:	1MB15..	
Unpainted (only cast-iron parts primed)	**S00**	○	○	○	○	○	○	○	○	○	○	○	○	○			
Unpainted, only primed	**S01**	✓	✓	✓	✓	✓	✓	✓	✓	✓	✓	✓	✓	✓			
Special paint finish C3	**S02**	✓	✓	✓	✓	✓	✓	✓	✓	✓	✓	✓	✓	✓	Only for:	1MB15..	
		–	–	–	☐	☐	☐	☐	☐	☐	☐	☐	☐	☐	Only for:	1MB16..	
Special paint finish sea air resistant C4	**S03**	✓	✓	✓	✓	✓	✓	✓	✓	✓	✓	✓	✓	✓			
Special paint finish for use offshore C5	**S04**	✓	✓	✓	✓	✓	✓	✓	✓	✓	✓	✓	✓	✓			
Internal coating	**S05**	✓	✓	✓	✓	✓	✓	✓	✓	✓	✓	✓	✓	✓			
Top coat polyurethane	**S06**	✓	✓	✓	✓	✓	✓	✓	✓	✓	✓	✓	✓	✓	Only for:	1MB1.3. – Ex ec (Zone 2)	
Special paint finish C5mid with medium durability	**S08**	✓	✓	✓	✓	✓	✓	✓	✓	✓	✓	✓	✓	✓			
Special paint finish CX for offshore with high durability	**S09**	✓	✓	✓	✓	✓	✓	✓	✓	✓	✓	✓	✓	✓			
Paint finish in other standard RAL colors: RAL AL 1015, 3000, 5002, 5009, 5010, 5012, 5015, 6011, 7001, 7011, 7016, 7031, 7032, 7035, 7037, 8012, 9005, 9010 (see Catalog Section 1 "Introduction")	**Y53 •** and paint finish RAL	✓	✓	✓	✓	✓	✓	✓	✓	✓	✓	✓	✓	✓			
Paint finish in special RAL colors: For RAL colors, see "Special paint finish in special RAL colors" (see Catalog Section 1 "Introduction")	**Y56 •** and paint finish RAL	✓	✓	✓	✓	✓	✓	✓	✓	✓	✓	✓	✓	✓			

For legends, see page 6/106.

© Innomotics 2024

Innomotics XP 1MB1, 1MB5 explosion-protected motors

Cast-iron series 1MB15 Basic Line, 1MB16 Performance Line

Special versions	Additional identification code -Z with order code and plain text if required	Frame size 71	80	90	100	112	132	160	180	200	225	250	280	315	Motor version		
		1MB15.3 Basic Line													IEC	Ex tb (Zone 21), Ex tc (Zone 22), Ex ec (Zone 2)	IE3
					1MB16.3 Performance Line												
1MB15 . . - . . . . . - . . . . -Z		1MB15.1 Basic Line															IE2
1MB16 . . - . . . . . - . . . . -Z	Order code				1MB16.1 Performance Line												
Colors and paint finish (continued)																	
Non-standard colors Colors see "Paint finish in non-standard colors (see Catalog Section 1 "Introduction")	**Y66 •** and paint finish	✓	✓	✓	✓	✓	✓	✓	✓	✓	✓	✓	✓	✓			
Modular technology – Basic versions																	
Mounting of separately driven fan	**F70**	–	–	–	–	–	–	–	–	–	✓	✓	✓	✓	Only for:	1MB1.1. – Ex tb (Zone 21)	
		–	–	–	✓	✓	✓	✓	✓	✓	✓	✓	✓	✓	Only for:	1MB1.2. – Ex tc (Zone 22)	
		–	–	–	✓	✓	✓	✓	✓	✓	✓	✓	✓	✓	Only for:	1MB1.3. – Ex ec (Zone 2)	
Special technology																	
Mounting of LL 841 (HTL); 1024 I explosion-protected rotary pulse encoder	**G30**	–	–	–	✓	✓	✓	✓	✓	✓	✓	✓	✓	✓			
Mechanical version and degrees of protection																	
Low-noise version for 2-pole motors with clockwise direction of rotation	**F77**	–	–	–	–	–	✓	✓	✓	✓	✓	✓	✓	✓			
Low-noise version for 2-pole motors with counterclockwise direction of rotation	**F78**	–	–	–	–	–	✓	✓	✓	✓	✓	✓	✓	✓			
Mechanical protection for encoder	**G43**	–	–	–	☐	☐	☐	☐	☐	☐	✓	✓	✓	✓			
Protective cover	**H00**	✓	✓	✓	✓	✓	✓	✓	✓	✓	✓	✓	✓	✓			
Screwed-on (instead of cast) feet	**H01**	–	–	–	✓	✓	✓	✓	✓	✓	✓	✓	✓	✓			
Vibration-proof version; vibration resistance to Class 3M4 according to IEC 60721-3-3:1994	**H02**	✓	✓	✓	✓	✓	✓	✓	✓	✓	✓	✓	✓	✓			
Condensation drainage holes	**H03**	✓	✓	✓	☐	☐	☐	☐	☐	☐	☐	☐	☐	☐			
External screws, bolts and unpainted materials made of stainless steel (V4A)	**H06**	✓	✓	✓	✓	✓	✓	✓	✓	✓	✓	✓	✓	✓			
Rust-resistant screws (externally)	**H07**	✓	✓	✓	✓	✓	✓	✓	✓	✓	✓	✓	✓	✓			
IP66 degree of protection	**H19**	✓	✓	✓	✓	✓	✓	✓	✓	✓	✓	✓	✓	✓			
IP65 degree of protection	**H20**	✓	✓	✓	✓	✓	✓	✓	✓	✓	✓	✓	✓	✓			
IP56 degree of protection	**H22**	✓	✓	✓	✓	✓	✓	✓	✓	✓	✓	✓	✓	✓			
Drive-end seal for flange-mounting motors, oil-tight to 0.1 bar	**H23**	✓	✓	✓	✓	✓	✓	✓	✓	✓	✓	✓	✓	✓	Not for:	Type of construction IM V3	
Prepared for Adjustment screws for feet in horizontal installation	**H30**	–	–	–	–	–	–	–	✓	✓	✓	✓	✓	✓			
Coolant temperature and installation altitude																	
Coolant temperature –40 to +40 °C	**D03**	✓	✓	✓	✓	✓	✓	✓	✓	✓	✓	✓	✓	✓			
Versions in accordance with standards and specifications																	
Motor without CE marking for export outside EEA (see EU Regulation 2019/1781)	**D22**	○	○	○	○	○	○	○	○	○	○	○	○	○			
Motor exclusively according to the Energy-related Products Law, Article 1 dated 27.2.2008, motor to be used in means of transport for persons and goods	**D23**	○	○	○	○	○	○	○	○	○	○	○	○	○			
Ex certification for China	**D32**	✓	✓	✓	✓	✓	✓	✓	✓	✓	✓	✓	✓	✓			
China Energy Efficiency Label	**D34**	○	○	○	○	○	○	○	○	○	○	○	○	○			
EAC Ex certificate for the Eurasian Customs Union	**D35**	✓	✓	✓	✓	✓	✓	✓	✓	✓	✓	✓	✓	✓			
IEC Ex certification	**D37**	✓	✓	✓	✓	✓	✓	✓	✓	✓	✓	✓	✓	✓			
MEPS Australia	**D70**	–	✓	✓	✓	✓	✓	✓	✓	✓	✓	✓	✓	✓	Only for:	1MB1..3	
UKCA-Ex-certification		☐	☐	☐	☐	☐	☐	☐	☐	☐	☐	☐	☐	☐			
Bearings and lubrication																	
Regreasing device with M10 × 1 grease nipple according to DIN 71412-A	**L19**	–	–	–	–	–	–	–	✓	✓	✓	✓	○	○			
Located bearing DE	**L20**	✓	✓	✓	✓	✓	✓	✓	✓	✓	✓	✓	✓	✓			
Located bearing NDE	**L21**	✓	✓	✓	✓	✓	✓	☐	☐	☐	☐	☐	☐	☐			
Bearing design for increased cantilever forces	**L22**	✓	✓	✓	✓	✓	✓	✓	✓	✓	✓	✓	✓	✓			
Regreasing device	**L23**	–	–	–	✓	✓	✓	✓	✓	✓	✓	✓	☐	☐	Only for:	1MB15..	
		–	–	–	✓	✓	✓	☐	☐	☐	☐	☐	☐	☐	Only for:	1MB16..	
Bearings reinforced at both ends for DE and NDE, bearing size 63	**L25**	✓	✓	✓	✓	✓	✓	✓	✓	✓	✓	✓	☐	☐	Only for:	1MB15..	
		–	–	–	☐	☐	☐	☐	☐	☐	☐	☐	☐	☐	Only for:	1MB16..	
Bearing for high axial tension forces	**L34**	–	–	–	✓	✓	✓	✓	✓	✓	–	–	–	–	Only for: Not for:	ATEX Examination Certificate Ex tb (Zone 21)	

For legends, see page 6/106.

© Innomotics 2024

Innomotics XP 1MB1, 1MB5 explosion-protected motors

Cast-iron series 1MB15 Basic Line, 1MB16 Performance Line

Special versions	Additional identification code -Z with order code and plain text if required	Frame size													Motor version		
		71	80	90	100	112	132	160	180	200	225	250	280	315			
		1MB15.3 Basic Line													IEC	Ex tb (Zone 21), Ex tc (Zone 22), Ex ec (Zone 2)	IE3
					1MB16.3 Performance Line												
1MB15 . . - . . . . . - . . . . -Z		1MB15.1 Basic Line															IE2
1MB16 . . - . . . . . - . . . . -Z	Order code				1MB16.1 Performance Line												
Bearings and lubrication (continued)																	
Bearing insulation NDE	**L51**	–	–	–	–	–	–	–	✓	✓	✓	✓	✓	✓			
Measuring nipple for SPM shock pulse measurement for bearing inspection	**Q01**	–	–	–	✓	✓	✓	✓	✓	✓	✓	✓	✓	✓			
Balance and vibration severity																	
Vibration severity grade A		☐	☐	☐	☐	☐	☐	☐	☐	☐	☐	☐	☐	☐			
Vibration severity grade B	**L00**	✓	✓	✓	✓	✓	✓	✓	✓	✓	✓	✓	✓	✓			
Half-key balancing		☐	☐	☐	☐	☐	☐	☐	☐	☐	☐	☐	☐	☐			
Balancing without feather key	**L01**	✓	✓	✓	✓	✓	✓	✓	✓	✓	✓	✓	✓	✓			
Full-key balancing	**L02**	✓	✓	✓	✓	✓	✓	✓	✓	✓	✓	✓	✓	✓			
Shaft and rotor																	
Shaft extension with standard dimensions, without feather keyway	**L04**	✓	✓	✓	✓	✓	✓	✓	✓	✓	✓	✓	✓	✓			
Standard, cylindrical shaft extension (second shaft extension) NDE acc. to EN 50347	**L05**	✓	✓	✓	✓	✓	✓	✓	✓	✓	✓	✓	✓	✓			
Standard shaft made of stainless steel (e.g. 1.4021)	**L06**	✓	✓	✓	✓	✓	✓	✓	✓	✓	✓	✓	✓	✓			
Shaft extension run-out in accordance with IEC 60072-1 precision class	**L07**	✓	✓	✓	✓	✓	✓	✓	✓	✓	✓	✓	✓	✓			
Shaft extension run-out, concentricity and perpendicularity in accordance with IEC 60072-1 precision class for flange-mounted motors	**L08**	✓	✓	✓	✓	✓	✓	✓	✓	✓	✓	✓	✓	✓			
Non-standard cylindrical shaft extension, DE	**Y58 •** and customer specifications	✓	✓	✓	✓	✓	✓	✓	✓	✓	✓	✓	✓	✓			
Non-standard cylindrical shaft extension, NDE	**Y59 •** and customer specifications	✓	✓	✓	✓	✓	✓	✓	✓	✓	✓	✓	✓	✓			
Heating and ventilation																	
Metal external fan	**F76**	✓	✓	✓	✓	✓	✓	✓	✓	✓	✓	✓	✓	✓		Standard for 1MB1.1 and 1MB1.2	
Anti-condensation heating for 230 V (2 terminals)	**Q02**	✓	✓	✓	✓	✓	✓	✓	✓	✓	✓	✓	✓	✓			
Anti-condensation heating for 115 V (2 terminals)	**Q03**	✓	✓	✓	✓	✓	✓	✓	✓	✓	✓	✓	✓	✓			
Rating plate and additional rating plates																	
Second rating plate, loose	**M10**	✓	✓	✓	✓	✓	✓	✓	✓	✓	✓	✓	✓	✓			
Rating plate, stainless steel	**M11**	✓	✓	✓	✓	✓	✓	✓	✓	✓	☐	☐	☐	☐	Only for:	1MB15..	
		–	–	–	☐	☐	☐	☐	☐	☐	☐	☐	☐	☐	Only for:	1MB16..	
Additional rating plate with deviating rating plate data	**Y80 •** and customer specifications	✓	✓	✓	✓	✓	✓	✓	✓	✓	✓	✓	✓	✓			
Additional rating plate with customer specifications	**Y82 •** and customer specifications	✓	✓	✓	✓	✓	✓	✓	✓	✓	✓	✓	✓	✓			
Additional information on rating plate and on package label (max. 20 characters)	**Y84 •** and customer specifications	✓	✓	✓	✓	✓	✓	✓	✓	✓	✓	✓	✓	✓			
Packaging, safety notes, documentation and test certificates																	
Inspection certificate 3.1 according to EN 10204	**B02**	✓	✓	✓	✓	✓	✓	✓	✓	✓	✓	✓	✓	✓			
Document – Electrical datasheet	**B60**	✓	✓	✓	✓	✓	✓	✓	✓	✓	✓	✓	✓	✓			
Document – Order dimensional drawing	**B61**	✓	✓	✓	✓	✓	✓	✓	✓	✓	✓	✓	✓	✓			
Standard test (routine test) with acceptance	**B65**	✓	✓	✓	✓	✓	✓	✓	✓	✓	✓	✓	✓	✓			
Remote acceptance	**B77**	–	–	–	–	–	–	–	–	–	✓	✓	✓	✓	Only for:	Combination with order code B65, B67, B83	
Hybrid acceptance	**B78**	–	–	–	–	–	–	–	–	–	✓	✓	✓	✓	Only for:	Combination with order code B65, B67, B83	

For legends, see page 6/106.

© Innomotics 2024

Innomotics XP 1MB1, 1MB5 explosion-protected motors

Cast-iron series 1MB15 Basic Line, 1MB16 Performance Line

Special versions	Additional identification code **-Z** with order code and plain text if required	Frame size													Motor version		
		71	**80**	**90**	**100**	**112**	**132**	**160**	**180**	**200**	**225**	**250**	**280**	**315**			
		1MB15.3 Basic Line													IEC	Ex tb (Zone 21), Ex tc (Zone 22), Ex ec (Zone 2)	IE3
					1MB16.3 Performance Line												
1MB15 . . - . . . . . - . . . . -Z		**1MB15.1 Basic Line**															IE2
1MB16 . . - . . . . . - . . . . -Z	Order code				**1MB16.1 Performance Line**												
Packaging, safety notes, documentation and test certificates (continued)																	
Type test with heat run for horizontal motors, with acceptance	**B83**	✓	✓	✓	✓	✓	✓	✓	✓	✓	✓	✓	✓	✓			
"Basic" documentation package	**B90**	✓	✓	✓	✓	✓	✓	✓	✓	✓	✓	✓	✓	✓			
"Advanced" documentation package	**B91**	✓	✓	✓	✓	✓	✓	✓	✓	✓	✓	✓	✓	✓			
"Projects" documentation package	**B92**	✓	✓	✓	✓	✓	✓	✓	✓	✓	✓	✓	✓	✓			
Wire-lattice pallet packaging	**B99**	○	○	○	○	○	○	○	–	–	–	–	–	–			

☐ Standard version
○ Without additional charge
● This order code only determines the price of the version – Additional plain text is required.
✓ With additional charge
– Not possible

Note:
The catalog provides an overview of the available motor options but doesn't detail the correct logic combinations.
For a customized selection tailored to your specific requirements, please use the Siemens Product Configurator at the following address:
configurator.innomotics.com

© Innomotics 2024

Innomotics XP 1MB1, 1MB5 explosion-protected motors

Selection and ordering data

Special versions	Additional identification code -Z with order code and plain text if required	Frame size													Motor version		
		71	80	90	100	112	132	160	180	200	225	250	280	315	IEC	Ex eb (Zone 1)	IE3
		1MB1543 Basic Line															
					1MB1643 Performance Line												
1MB1.43 - . . . . . - . . . . -Z											1MB5543 Basic Line						
1MB5.43 - . . . . . - . . . . -Z	Order code										1MB5643 Performance Line						
Explosion-protected version																	
Version IIC with stamping of IIB	**B31**	○	○	○	○	○	○	○	○	○	○	○	○	○			
Version additionally for dust Ex tb – Zone 21; IP65	**B32**	✓	✓	✓	✓	✓	✓	✓	✓	✓	✓	✓	✓	✓			
T1/T2 on rating plate	**B33**	–	–	–	–	–	○	○	○	○	○	○	○	○			
VIK version	**C02**	✓	✓	✓	✓	✓	✓	✓	✓	✓	✓	✓	✓	✓			
Chemstar design chemical industry	**C03**	✓	✓	✓	✓	✓	✓	✓	✓	✓	✓	✓	✓	–			
Chemstar design Oil & Gas industry	**C04**	✓	✓	✓	✓	✓	✓	✓	✓	✓	✓	✓	✓	–			
Motor protection																	
3 Pt100 resistance thermometers (9 terminals)	**Q63**	–	–	–	–	–	–	✓	✓	✓	✓	✓	✓	✓			
6 Pt100 resistance thermometers (18 terminals)	**Q64**	–	–	–	–	–	–	–	✓	✓	✓	✓	✓	✓			
2 Pt100 resistance thermometers in basic configuration for bearings (4 terminals)	**Q72**	–	–	–	–	–	–	–	✓	✓	✓	✓	✓	✓			
2 Pt100 resistance thermometers for bearings (6 terminals)	**Q78**	–	–	–	–	–	–	–	✓	✓	✓	✓	✓	✓			
2 Pt100 double resistance thermometers for bearings (12 terminals)	**Q79**	–	–	–	–	–	–	–	–	–	–	–	✓	✓			
Motor connection and terminal box																	
External grounding		□	□	□	□	□	□	□	□	□	□	□	□	□			
Second external grounding	**H70**	–	–	–	✓	✓	✓	✓	✓	✓	✓	✓	✓	✓			
Connected in star for dispatch	**M01**	✓	✓	✓	✓	✓	✓	✓	✓	✓	✓	✓	✓	✓			
Connected in delta for dispatch	**M02**	✓	✓	✓	✓	✓	✓	✓	✓	✓	□	□	□	□			
Rotation of the terminal box through 90°, entry from DE	**R10**	○	○	○	○	○	○	○	✓	✓	✓	✓	✓	✓			
Rotation of the terminal box through 90°, entry from NDE	**R11**	○	○	○	○	○	○	○	✓	✓	✓	✓	✓	✓			
Rotation of the terminal box through 180°	**R12**	○	○	○	○	○	○	○	✓	✓	✓	✓	✓	✓			
One EMC cable gland	**R14**	✓	✓	✓	✓	✓	✓	✓	✓	✓	✓	✓	✓	✓			
One metal cable gland	**R15**	○	○	○	○	○	○	○	○	○	○	○	○	○			
EMC cable gland, maximum number of components	**R16**	✓	✓	✓	✓	✓	✓	✓	✓	✓	✓	✓	✓	✓			
Metal cable gland, maximum configuration	**R18**	✓	✓	✓	✓	✓	✓	✓	✓	✓	✓	✓	✓	✓			
Saddle terminal for connection without cable lug, accessories pack	**R19**	–	–	–	–	–	–	–	–	–	□	□	□	□			
One cable gland for armored cable	**R45**	✓	✓	✓	✓	✓	✓	✓	✓	✓	✓	✓	✓	✓			
Larger terminal box	**R50**	✓	✓	✓	✓	✓	✓	✓	✓	✓	✓	✓	✓	✓			
Drilled removable entry plate	**R52**	–	–	–	–	–	–	–	–	–	✓	✓	✓	✓			
Undrilled removable entry plate	**R53**	–	–	–	–	–	–	–	–	–	✓	✓	✓	✓			
Cast-iron auxiliary terminal box (small)	**R62**	–	–	–	✓	✓	✓	✓	✓	✓	✓	✓	✓	✓			
Cast-iron auxiliary terminal box (large)	**R63**	–	–	–	–	–	–	–	–	–	–	✓	✓	✓			
2 small cast-iron auxiliary terminal boxes	**R67**	–	–	–	✓	✓	✓	✓	✓	✓	✓	✓	✓	✓			
2 big cast-iron auxiliary terminal boxes	**R68**	–	–	–	–	–	–	–	–	–	–	✓	✓	✓			
Windings and insulation																	
Temperature class 155 (F), utilized acc. to 130 (B), coolant temperature 45 °C, derating approx. 4 %	**N05**	O. R.	O. R.	O. R.	O. R.	O. R.	O. R.	O. R.	O. R.	O. R.	O. R.	O. R.	O. R.	O. R.			
Temperature class 155 (F), utilized acc. to 130 (B), coolant temperature 50 °C, derating approx. 8 %	**N06**	O. R.	O. R.	O. R.	O. R.	O. R.	O. R.	O. R.	O. R.	O. R.	O. R.	O. R.	O. R.	O. R.			
Temperature class 155 (F), utilized acc. to 130 (B), coolant temperature 55 °C, derating approx. 13 %	**N07**	O. R.	O. R.	O. R.	O. R.	O. R.	O. R.	O. R.	O. R.	O. R.	O. R.	O. R.	O. R.	O. R.			
Temperature class 155 (F), utilized acc. to 130 (B), coolant temperature 60 °C, derating approx. 18 %	**N08**	O. R.	O. R.	O. R.	O. R.	O. R.	O. R.	O. R.	O. R.	O. R.	O. R.	O. R.	O. R.	O. R.			
Increased air humidity/temperature with 30 to 60 g water per m^3 of air	**N30**	✓	✓	✓	✓	✓	✓	✓	✓	✓	✓	✓	✓	✓			
Increased air humidity/temperature with 60 to 100 g water per m^3 of air	**N31**	✓	✓	✓	✓	✓	✓	✓	✓	✓	✓	✓	✓	✓			

For legends, see page 6/110.

© Innomotics 2024

Innomotics XP 1MB1, 1MB5 explosion-protected motors

Cast-iron series 1MB.543 Basic Line and 1MB.643 Performance Line

Special versions	Additional identification code -Z with order code and plain text if required	Frame size 71	80	90	100	112	132	160	180	200	225	250	280	315	Motor version IEC	Ex eb (Zone 1)	IE3
		1MB1543 Basic Line															
					1MB1643 Performance Line												
											1MB5543 Basic Line						
												1MB5643 Performance Line					
1MB1.43 - ..... - .... -Z 1MB5.43 - ..... - .... -Z	Order code																
Colors and paint finish																	
Standard paint finish C2 in RAL 7030 stone gray		☐	☐	☐	☐	☐	☐	☐	☐	☐	☐	☐	☐	☐	Only for: 1MB.5..		
Unpainted (only cast-iron parts primed)	**S00**	○	○	○	○	○	○	○	○	○	○	○	○	○			
Unpainted, only primed	**S01**	✓	✓	✓	✓	✓	✓	✓	✓	✓	✓	✓	✓	✓			
Special paint finish C3	**S02**	✓	✓	✓	✓	✓	✓	✓	✓	✓	✓	✓	✓	✓	Only for: 1MB.5..		
		–	–	–	☐	☐	☐	☐	☐	☐	☐	☐	☐	☐	Only for: 1MB.6..		
Special paint finish sea air resistant C4	**S03**	✓	✓	✓	✓	✓	✓	✓	✓	✓	✓	✓	✓	✓			
Special paint finish for use offshore C5	**S04**	✓	✓	✓	✓	✓	✓	✓	✓	✓	✓	✓	✓	✓			
Internal coating	**S05**	–	–	–	✓	✓	✓	✓	✓	✓	✓	✓	✓	✓			
Top coat polyurethane	**S06**	✓	✓	✓	✓	✓	✓	✓	✓	✓	✓	✓	✓	✓			
Special paint finish C5mid with medium durability	**S08**	✓	✓	✓	✓	✓	✓	✓	✓	✓	✓	✓	✓	✓			
Special paint finish CX for offshore with high durability	**S09**	✓	✓	✓	✓	✓	✓	✓	✓	✓	✓	✓	✓	✓			
Paint finish in other standard RAL colors: RAL 1015, 3000, 5002, 5009, 5010, 5012, 5015, 6011, 7001, 7011, 7016, 7031, 7032, 7035, 7037, 8012, 9005, 9010 (see Catalog Section 1 "Introduction")	**Y53 •** and paint finish RAL	✓	✓	✓	✓	✓	✓	✓	✓	✓	✓	✓	✓	✓			
Paint finish in special RAL colors: For RAL colors, see "Special paint finish in special RAL colors" (see Catalog Section 1 "Introduction")	**Y56 •** and paint finish RAL	✓	✓	✓	✓	✓	✓	✓	✓	✓	✓	✓	✓	✓			
Non-standard colors Colors see "Paint finish in non-standard colors (see Catalog Section 1 "Introduction")	**Y66 •** and paint finish	✓	✓	✓	✓	✓	✓	✓	✓	✓	✓	✓	✓	✓			
Mechanical version and degrees of protection																	
Low-noise version for 2-pole motors with clockwise direction of rotation	**F77**	–	–	–	–	–	O. R.	O. R.	O. R.	O. R.	✓	✓	✓	✓			
Low-noise version for 2-pole motors with anti-clockwise direction of rotation	**F78**	–	–	–	–	–	O. R.	O. R.	O. R.	O. R.	✓	✓	✓	✓			
Protective cover	**H00**	✓	✓	✓	✓	✓	✓	✓	✓	✓	✓	✓	✓	✓			
Screwed-on (instead of cast) feet	**H01**	–	–	–	✓	✓	✓	✓	✓	✓	✓	✓	✓	✓			
Vibration-proof version; vibration resistance to Class 3M4 according to IEC 60721-3-3:1994	**H02**	✓	✓	✓	✓	✓	✓	✓	✓	✓	✓	✓	✓	✓			
Condensation drainage holes	**H03**	✓	✓	✓	☐	☐	☐	☐	☐	☐	☐	☐	☐	☐			
External screws, bolts and unpainted materials made of stainless steel (V4A)	**H06**	✓	✓	✓	✓	✓	✓	✓	✓	✓	✓	✓	✓	✓			
Rust-resistant screws (externally)	**H07**	✓	✓	✓	✓	✓	✓	✓	✓	✓	✓	✓	✓	✓			
IP66 degree of protection	**H19**	✓	✓	✓	✓	✓	✓	✓	✓	✓	✓	✓	✓	✓			
IP65 degree of protection	**H20**	✓	✓	✓	✓	✓	✓	✓	✓	✓	✓	✓	✓	✓			
IP56 degree of protection	**H22**	✓	✓	✓	✓	✓	✓	✓	✓	✓	✓	✓	✓	✓			
Drive-end seal for flange-mounting motors, oil-tight to 0.1 bar Not possible for type of construction IM V3	**H23**	✓	✓	✓	✓	✓	✓	✓	✓	✓	✓	✓	✓	✓			
Prepared for Adjustment screws for feet in horizontal installation	**H30**	–	–	–	–	–	–	–	✓	✓	✓	✓	✓	✓			
Coolant temperature and installation altitude																	
Coolant temperature –40 to +40 °C	**D03**	✓	✓	✓	✓	✓	✓	✓	✓	✓	✓	✓	✓	✓			
Versions in accordance with standards and specifications																	
IECEx certification	**D37**	✓	✓	✓	✓	✓	✓	✓	✓	✓	✓	✓	✓	✓			
UKCA-Ex-certification		☐	☐	☐	☐	☐	☐	☐	☐	☐	☐	☐	☐	☐			
Bearings and lubrication																	
Regreasing device with M10 × 1 grease nipple according to DIN 71412-A	**L19**	–	–	–	–	–	–	–	✓	✓	✓	✓	○	○			
Located bearing DE	**L20**	✓	✓	✓	✓	✓	✓	✓	✓	✓	✓	✓	✓	✓			
Located bearing NDE	**L21**	✓	✓	✓	✓	✓	✓	☐	☐	☐	☐	☐	☐	☐			
Bearing design for increased cantilever forces	**L22**	✓	✓	✓	✓	✓	✓	✓	✓	✓	✓	✓	✓	✓			
Regreasing device	**L23**	–	–	–	✓	✓	✓	✓	✓	✓	✓	✓	☐	☐	Only for: 1MB.5..		
		–	–	–	✓	✓	✓	☐	☐	☐	☐	☐	☐	☐	Only for: 1MB.6..		
Bearings reinforced at both ends for DE and NDE, bearing size 63	**L25**	✓	✓	✓	✓	✓	✓	✓	✓	✓	✓	✓	☐	☐	Only for: 1MB.5..		
		–	–	–	☐	☐	☐	☐	☐	☐	☐	☐	☐	☐	Only for: 1MB.6..		

For legends, see page 6/110.

© Innomotics 2024

Innomotics XP 1MB1, 1MB5 explosion-protected motors

Cast-iron series 1MB.543 Basic Line and 1MB.643 Performance Line

Special versions	Additional identification code -Z with order code and plain text if required	Frame size 71	80	90	100	112	132	160	180	200	225	250	280	315	Motor version IEC	Ex eb (Zone 1)	IE3
		1MB1543 Basic Line															
					1MB1643 Performance Line												
											1MB5543 Basic Line						
											1MB5643 Performance Line						
1MB1.43 - ..... - .... -Z																	
1MB5.43 - ..... - .... -Z	Order code																
Bearings and lubrication (continued)																	
Reinforced bearings at both DE and NDE, DE bearing for increased cantilever forces	**L28**	–	–	–	–	–	–	–	✓	✓	✓	✓	–	–			
Bearing insulation DE	**L50**	–	–	–	–	–	–	–	–	–	✓	✓	✓	✓			
Bearing insulation NDE	**L51**	–	–	–	–	–	–	–	–	–	✓	✓	✓	✓			
Measuring nipple for SPM shock pulse measurement for bearing inspection	**Q01**	–	–	–	✓	✓	✓	✓	✓	✓	✓	✓	✓	✓			
Balance and vibration severity																	
Vibration severity grade A		☐	☐	☐	☐	☐	☐	☐	☐	☐	☐	☐	☐	☐			
Vibration severity grade B	**L00**	✓	✓	✓	✓	✓	✓	✓	✓	✓	✓	✓	✓	✓			
Half-key balancing		☐	☐	☐	☐	☐	☐	☐	☐	☐	☐	☐	☐	☐			
Balancing without feather key	**L01**	✓	✓	✓	✓	✓	✓	✓	✓	✓	✓	✓	✓	✓			
Full-key balancing	**L02**	✓	✓	✓	✓	✓	✓	✓	✓	✓	✓	✓	✓	✓			
Shaft and rotor																	
Shaft extension with standard dimensions, without feather keyway	**L04**	✓	✓	✓	✓	✓	✓	✓	✓	✓	✓	✓	✓	✓			
Standard, cylindrical shaft extension (second shaft extension) NDE acc. to EN 50347	**L05**	✓	✓	✓	✓	✓	✓	✓	✓	✓	✓	✓	✓	✓			
Standard shaft made of stainless steel (e.g. 1.4021)	**L06**	✓	✓	✓	✓	✓	✓	✓	✓	✓	✓	✓	✓	✓			
Shaft extension run-out in accordance with IEC 60072-1 precision class	**L07**	✓	✓	✓	✓	✓	✓	✓	✓	✓	✓	✓	✓	✓			
Shaft extension run-out, concentricity and perpendicularity in accordance with IEC 60072-1 precision class for flange-mounted motors	**L08**	✓	✓	✓	✓	✓	✓	✓	✓	✓	✓	✓	✓	✓			
Non-standard cylindrical shaft extension, DE	**Y58** • and customer specifications	✓	✓	✓	✓	✓	✓	✓	✓	✓	✓	✓	✓	✓			
Non-standard cylindrical shaft extension, NDE	**Y59** • and customer specifications	✓	✓	✓	✓	✓	✓	✓	✓	✓	✓	✓	✓	✓			
Heating and ventilation																	
Sheet metal fan cover		☐	☐	☐	☐	☐	☐	☐	☐	☐	☐	☐	☐	☐			
Metal external fan	**F76**	☐	☐	☐	☐	☐	☐	☐	☐	☐	☐	☐	☐	☐			
Anti-condensation heating for 230 V (2 terminals)	**Q02**	✓	✓	✓	✓	✓	✓	✓	✓	✓	✓	✓	✓	✓			
Anti-condensation heating for 115 V (2 terminals)	**Q03**	✓	✓	✓	✓	✓	✓	✓	✓	✓	✓	✓	✓	✓			
Rating plate and additional rating plates																	
Second rating plate, loose	**M10**	✓	✓	✓	✓	✓	✓	✓	✓	✓	✓	✓	✓	✓			
Rating plate, stainless steel	**M11**	✓	✓	✓	✓	✓	✓	✓	✓	✓	☐	☐	☐	☐	Only for: 1MB.5..		
		–	–	–	☐	☐	☐	☐	☐	☐	☐	☐	☐	☐	Only for: 1MB.6..		
Additional rating plate with deviating rating plate data	**Y80** • and customer specifications	✓	✓	✓	✓	✓	✓	✓	✓	✓	✓	✓	✓	✓			
Additional rating plate with customer specifications	**Y82** • and customer specifications	✓	✓	✓	✓	✓	✓	✓	✓	✓	✓	✓	✓	✓			
Additional information on rating plate and on package label (max. 20 characters)	**Y84** • and customer specifications	✓	✓	✓	✓	✓	✓	✓	✓	✓	✓	✓	✓	✓			
Extension of the liability for defects																	
Extension of the liability for defects by 12 months to a total of 24 months (2 years) from delivery	**Q80**	–	–	–	–	–	–	–	✓	✓	✓	✓	✓	✓	Only for: 1MB.5..		
		–	–	–	☐	☐	☐	☐	☐	☐	☐	☐	☐	☐	Only for: 1MB.6..		
Extension of the liability for defects by 24 months to a total of 36 months (3 years) from delivery	**Q82**	–	–	–	–	–	–	–	✓	✓	✓	✓	✓	✓	Only for: 1MB.5..		
		–	–	–	☐	☐	☐	☐	☐	☐	☐	☐	☐	☐	Only for: 1MB.6..		

For legends, see page 6/110.

© Innomotics 2024

Innomotics XP 1MB1, 1MB5 explosion-protected motors

Cast-iron series 1MB.543 Basic Line and 1MB.643 Performance Line

Special versions	Additional identification code **-Z** with order code and plain text if required	Frame size													Motor version		
		71	**80**	**90**	**100**	**112**	**132**	**160**	**180**	**200**	**225**	**250**	**280**	**315**			
		1MB1543 Basic Line													IEC	Ex eb (Zone 1)	IE3
					1MB1643 Performance Line												
1MB1.43 - . . . . . - . . . . -Z											**1MB5543 Basic Line**						
1MB5.43 - . . . . . - . . . . -Z	Order code										**1MB5643 Performance Line**						
Packaging, safety notes, documentation and test certificates																	
Inspection certificate 3.1 according to EN 10204	**B02**	✓	✓	✓	✓	✓	✓	✓	✓	✓	✓	✓	✓	✓			
Document – Electrical datasheet	**B60**	✓	✓	✓	✓	✓	✓	✓	✓	✓	✓	✓	✓	✓			
Document – Order dimensional drawing	**B61**	✓	✓	✓	✓	✓	✓	✓	✓	✓	✓	✓	✓	✓			
Standard test (routine test) with acceptance	**B65**	✓	✓	✓	✓	✓	✓	✓	✓	✓	✓	✓	✓	✓			
Remote acceptance	**B77**	✓	✓	✓	✓	✓	✓	✓	✓	✓	✓	✓	✓	✓			
Hybrid acceptance	**B78**	✓	✓	✓	✓	✓	✓	✓	✓	✓	✓	✓	✓	✓			
Type test with heat run for horizontal motors, without acceptance	**B82**	✓	✓	✓	✓	✓	✓	✓	✓	✓	✓	✓	✓	✓			
Type test with heat run for horizontal motors, with acceptance	**B83**	O. R.	O. R.	O. R.	O. R.	O. R.	O. R.	O. R.	O. R.	O. R.	O. R.	O. R.	O. R.	O. R.			
"Basic" documentation package	**B90**	✓	✓	✓	✓	✓	✓	✓	✓	✓	✓	✓	✓	✓			
"Advanced" documentation package	**B91**	✓	✓	✓	✓	✓	✓	✓	✓	✓	✓	✓	✓	✓			
"Projects" documentation package	**B92**	✓	✓	✓	✓	✓	✓	✓	✓	✓	✓	✓	✓	✓			

☐ Standard version
O Without additional charge
• This order code only determines the price of the version – Additional plain text is required.
✓ With additional charge
O. R. Possible on request
– Not possible

Note:
The catalog provides an overview of the available motor options but doesn't detail the correct logic combinations.
For a customized selection tailored to your specific requirements, please use the Siemens Product Configurator at the following address: configurator.innomotics.com

© Innomotics 2024

Innomotics XP 1MB1, 1MB5 explosion-protected motors

Selection and ordering data

Special versions	Additional identification code -Z with order code and plain text if required	Frame size														Motor version		
		71	80	90	100	112	132	160	180	200	225	250	280	315	355			
		1MB1.5., 1MB1.6.														IEC	Ex db, Ex db eb (Zone 1)	IE3
													1MB55..					
					1MB18.3													
													1MB58.3					
1MB..5. - . . . . . - . . . . -Z																		
1MB..6. - . . . . . - . . . . -Z	Order code																	
Explosion-protected version																		
Version additionally for dust Ex tc – Zone 22	**B30**	✓	✓	✓	✓	✓	✓	✓	✓	✓	✓	✓	✓	✓	✓			
Version IIC with stamping of IIB	**B31**	○	○	○	○	○	○	○	○	○	○	○	○	○	○			
Version additionally for dust Ex tb – Zone 21; IP65	**B32**	✓	✓	✓	✓	✓	✓	✓	✓	✓	✓	✓	✓	✓	✓			
VIK version	**C02**	✓	✓	✓	✓	✓	✓	✓	✓	✓	✓	✓	✓	✓	✓	Only for:	1MB..5. Ex db IIC	
Chemstar chemiclal Industry	**C03**	✓	✓	✓	✓	✓	✓	✓	✓	✓	✓	✓	✓	✓	✓	Only for:	1MB..5. Ex db IIC	
Chemstar Oil & Gas Industry	**C04**	✓	✓	✓	✓	✓	✓	✓	✓	✓	✓	✓	✓	✓	✓			
Version for converter operation																		
Version for converter operation with power data on the PWM converter	**B43**	✓	✓	✓	✓	✓	✓	✓	✓	✓	✓	✓	✓	✓	✓			
Version for converter operation with power data on the PWM converter, utilization in accordance with temperature class 155 (F)	**B44**	✓	✓	✓	✓	✓	✓	✓	✓	✓	✓	✓	✓	✓	✓			
Motor protection																		
1 Pt1000 resistance thermometer (2 terminals)	**Q35**	✓	✓	✓	✓	✓	✓	✓	✓	✓	✓	✓	✓	✓	✓			
2 Pt1000 resistance thermometers (4 terminals)	**Q36**	✓	✓	✓	✓	✓	✓	✓	✓	✓	✓	✓	✓	✓	✓			
Pt100 resistance thermometers (6 terminals)	**Q60**	–	–	–	✓	✓	✓	✓	✓	✓	✓	✓	✓	✓	✓			
6 Pt100 resistance thermometers (12 terminals)	**Q61**	–	–	–	–	–	–	–	✓	✓	✓	✓	✓	✓	✓			
		–	–	–	–	–	–	✓	✓	✓	✓	✓	✓	✓	✓			
		–	–	–	✓	✓	✓	✓	✓	✓	✓	✓	✓	✓	✓			
3 Pt100 resistance thermometers (9 terminals)	**Q63**	–	–	–	–	–	–	✓	✓	✓	✓	✓	✓	✓	✓			
		–	–	–	✓	✓	✓	✓	✓	✓	✓	✓	✓	✓	✓			
6 Pt100 resistance thermometers (18 terminals)	**Q64**	–	–	–	–	–	–	✓	✓	✓	✓	✓	✓	✓	✓			
		–	–	–	–	–	✓	✓	✓	✓	✓	✓	✓	✓	✓			
		–	–	–	–	✓	✓	✓	✓	✓	✓	✓	✓	✓	✓			
2 Pt100 resistance thermometers in basic configuration for bearings (4 terminals)	**Q72**	–	–	–	–	–	–	✓	✓	✓	✓	✓	✓	✓	✓			
2 Pt100 resistance thermometers for bearings (6 terminals)	**Q78**	–	–	–	–	–	–	✓	✓	✓	✓	✓	✓	✓	✓			
2 Pt100 double resistance thermometers for bearings (12 terminals)	**Q79**	–	–	–	–	–	–	–	–	–	–	✓	✓	✓	✓			
Motor connection and terminal box																		
External grounding		□	□	□	□	□	□	□	□	□	□	□	□	□	□			
Second external grounding	**H70**	✓	✓	✓	✓	✓	✓	✓	✓	✓	✓	✓	✓	✓	✓			
Connected in star for dispatch	**M01**	✓	✓	✓	✓	✓	✓	✓	✓	✓	✓	✓	✓	✓	✓			
Connected in delta for dispatch	**M02**	✓	✓	✓	✓	✓	✓	✓	✓	✓	□	□	□	□	□			
Rotation of the terminal box through 90°, entry from DE	**R10**	✓	✓	✓	✓	✓	✓	✓	✓	✓	✓	✓	✓	✓	✓			
Rotation of the terminal box through 90°, entry from NDE	**R11**	✓	✓	✓	✓	✓	✓	✓	✓	✓	✓	✓	✓	✓	✓			
Rotation of the terminal box through 180°	**R12**	✓	✓	✓	✓	✓	✓	✓	✓	✓	✓	✓	✓	✓	✓			
One EMC cable gland	**R14**	✓	✓	✓	✓	✓	✓	✓	✓	✓	✓	✓	✓	✓	✓			
One metal cable gland	**R15**	✓	✓	✓	✓	✓	✓	✓	✓	✓	✓	✓	✓	✓	✓			
EMC cable gland, maximum number of components	**R16**	✓	✓	✓	✓	✓	✓	✓	✓	✓	✓	✓	✓	✓	✓			
Metal cable gland, maximum configuration	**R18**	✓	✓	✓	✓	✓	✓	✓	✓	✓	✓	✓	✓	✓	✓			
1 cable gland, Ex eb, for armored cable, line feeder cable	**R45**	✓	✓	✓	✓	✓	✓	✓	✓	✓	✓	✓	✓	✓	✓			
2 cable glands, Ex eb, for armored cable, line feeder cable	**R46**	–	–	–	✓	✓	✓	✓	✓	✓	✓	✓	✓	✓	✓			
Main terminal box in Ex db	**R48**	✓	✓	✓	✓	✓	✓	✓	✓	✓	✓	✓	✓	✓	✓			
Auxiliary terminal box in Ex db	**R49**	–	–	–	–	–	–	✓	✓	✓	✓	✓	✓	✓	✓			
Larger terminal box	**R50**	□	□	□	✓	✓	✓	✓	✓	✓	✓	✓	✓	✓	–			
Drilled removable entry plate	**R52**	–	–	–	–	–	–	–	–	–	✓	✓	✓	□	□	Not for:	Combination with order code R48	

For legends, see page 6/115.

© Innomotics 2024

Innomotics XP 1MB1, 1MB5 explosion-protected motors

Cast-iron series 1MB.55., 1MB.853, 1MB.56., 1MB.863

Special versions	Additional identification code -Z with order code and plain text if required	Frame size														Motor version	
		71	80	90	100	112	132	160	180	200	225	250	280	315	355		
		1MB1.5., 1MB1.6.														IEC	Ex db, Ex db eb (Zone 1) IE3
												1MB55..					
					1MB18.3												
												1MB58.3					
1MB..5. - . . . . . - . . . . -Z 1MB..6. - . . . . . - . . . . -Z	Order code																
Motor connection and terminal box (continued)																	
Enlarged connection system for main terminal box	**R54**	✓	✓	✓	✓	✓	✓	✓	✓	✓	–	–	–	–	–		
Cast-iron auxiliary terminal box (small)	**R62**	✓	✓	✓	✓	✓	✓	✓	✓	✓	✓	✓	✓	✓	✓		
Cast-iron auxiliary terminal box (large)	**R63**	–	–	–	–	–	–	–	–	✓	✓	✓	✓	✓	✓		
2 small cast-iron auxiliary terminal boxes	**R67**	✓	✓	✓	✓	✓	✓	✓	✓	✓	✓	✓	✓	✓	✓		
2 big cast-iron auxiliary terminal boxes	**R68**	–	–	–	–	–	–	–	–	✓	✓	✓	✓	✓	✓		
Non-standard threaded through hole (metric, NPT or G thread)	**Y61 •** and customer specifications	✓	✓	✓	✓	✓	✓	✓	✓	✓	✓	✓	✓	✓	✓		
Windings and insulation																	
Temperature class 155 (F), utilized acc. to 130 (B), coolant temperature 45 °C, derating approx. 4 %	**N05**	✓	✓	✓	✓	✓	✓	✓	✓	✓	✓	✓	✓	✓	✓		
Temperature class 155 (F), utilized acc. to 130 (B), coolant temperature 50 °C, derating approx. 8 %	**N06**	✓	✓	✓	✓	✓	✓	✓	✓	✓	✓	✓	✓	✓	✓		
Temperature class 155 (F), utilized acc. to 130 (B), coolant temperature 55 °C, derating approx. 13 %	**N07**	✓	✓	✓	✓	✓	✓	✓	✓	✓	✓	✓	✓	✓	✓		
Temperature class 155 (F), utilized acc. to 130 (B), coolant temperature 60 °C, derating approx. 18 %	**N08**	✓	✓	✓	✓	✓	✓	✓	✓	✓	✓	✓	✓	✓	✓		
Increased air humidity/temperature with 30 to 60 g water per m^3 of air	**N30**	✓	✓	✓	✓	✓	✓	✓	✓	✓	✓	✓	✓	✓	✓		
Increased air humidity/temperature with 60 to 100 g water per m^3 of air	**N31**	✓	✓	✓	✓	✓	✓	✓	✓	✓	✓	✓	✓	✓	✓		
Temperature class 155 (F), utilized acc. to 130 (B), with higher coolant temperature and/or installation altitude	**Y50 •** CT .. °C or IA .... m above sea level	✓	✓	✓	✓	✓	✓	✓	✓	✓	✓	✓	✓	✓	✓	Only for:	Installation Altitude < 2000 m
Colors and paint finish																	
Standard paint finish C2 in RAL 7030 stone gray		□	□	□	□	□	□	□	□	□	□	□	□	□	□		
Unpainted (only cast-iron parts primed)	**S00**	○	○	○	○	○	○	○	○	○	○	○	○	○	○		
Unpainted, only primed	**S01**	✓	✓	✓	✓	✓	✓	✓	✓	✓	✓	✓	✓	✓	✓		
Special paint finish C3	**S02**	✓	✓	✓	✓	✓	✓	✓	✓	✓	✓	✓	✓	✓	✓		
Special paint finish sea air resistant C4	**S03**	✓	✓	✓	✓	✓	✓	✓	✓	✓	✓	✓	✓	✓	✓		
Special paint finish for use offshore C5	**S04**	✓	✓	✓	✓	✓	✓	✓	✓	✓	✓	✓	✓	✓	✓		
Internal coating	**S05**	✓	✓	✓	✓	✓	✓	✓	✓	✓	✓	✓	✓	✓	✓		
Top coat polyurethane	**S06**	✓	✓	✓	✓	✓	✓	✓	✓	✓	✓	✓	✓	✓	✓		
Special paint finish C5mid with medium durability	**S08**	✓	✓	✓	✓	✓	✓	✓	✓	✓	✓	✓	✓	✓	✓		
Special paint finish CX for offshore with high durability	**S09**	✓	✓	✓	✓	✓	✓	✓	✓	✓	✓	✓	✓	✓	✓		
Paint finish in other standard RAL colors: RAL 1015, 3000, 5002, 5009, 5010, 5012, 5015, 6011, 7001, 7011, 7016, 7031, 7032, 7035, 7037, 8012, 9005, 9010 (see Catalog Section 1 "Introduction")	**Y53 •** and paint finish RAL	✓	✓	✓	✓	✓	✓	✓	✓	✓	✓	✓	✓	✓	✓		
Paint finish in special RAL colors: For RAL colors, see "Special paint finish in special RAL colors" (see Catalog Section 1 "Introduction")	**Y56 •** and paint finish RAL	✓	✓	✓	✓	✓	✓	✓	✓	✓	✓	✓	✓	✓	✓		
Non-standard colors Colors see "Paint finish in non-standard colors (see Catalog Section 1 "Introduction")	**Y66 •** and paint finish	✓	✓	✓	✓	✓	✓	✓	✓	✓	✓	✓	✓	✓	✓		
Modular technology – Basic versions																	
Mounting of separately driven fan	**F70**	–	–	–	–	–	–	–	–	–	✓	✓	✓	✓	✓	Not for:	Combination with order codes D03 and D05
Modular technology – Additional versions																	
Brake supply voltage 24 V DC	**F10**	–	○	○	○	○	○	○	○	○	–	–	–	–	–		
Brake supply voltage 230 V AC, 50/60 Hz	**F11**	–	○	○	○	○	○	○	○	○	–	–	–	–	–		

For legends, see page 6/115.

© Innomotics 2024

Innomotics XP 1MB1, 1MB5 explosion-protected motors

Cast-iron series 1MB.55., 1MB.853, 1MB.56., 1MB.863

Special versions	Additional identification code -Z with order code and plain text if required	Frame size														Motor version	
		71	80	90	100	112	132	160	180	200	225	250	280	315	355		
		1MB1.5., 1MB1.6.														IEC	Ex db, Ex db eb (Zone 1) IE3
												1MB55..					
					1MB18.3												
												1MB58.3					
1MB..5. - . . . . . - . . . . -Z																	
1MB..6. - . . . . . - . . . . -Z	Order code																
Modular technology – Additional versions (continued)																	
Brake supply voltage 400 V AC, 50/60 Hz	**F12**	–	○	○	○	○	○	○	○	○	–	–	–	–	–		
Mechanical manual brake release with lever (no locking)	**F50**	–	✓	✓	✓	✓	✓	✓	✓	✓	–	–	–	–	–		
Special technology																	
Mounting of brake in Ex db version	**F20**	–	✓	✓	✓	✓	✓	✓	✓	✓	–	–	–	–	–		
Mounting of LL 841 (HTL); 1024 I explosion-protected rotary pulse encoder	**G30**	–	–	–	✓	✓	✓	✓	✓	✓	✓	✓	✓	✓	✓		
Mechanical version and degrees of protection																	
Low-noise version for 2-pole motors with clockwise direction of rotation	**F77**	–	–	–	–	–	–	✓	✓	✓	✓	✓	✓	✓	✓		
Low-noise version for 2-pole motors with counterclockwise direction of rotation	**F78**	–	–	–	–	–	–	✓	✓	✓	✓	✓	✓	✓	✓		
Protective cover	**H00**	✓	✓	✓	✓	✓	✓	✓	✓	✓	✓	✓	✓	✓	✓		
Vibration-proof version; vibration resistance to Class 3M4 according to IEC 60721-3-3:1994	**H02**	✓	✓	✓	✓	✓	✓	✓	✓	✓	✓	✓	✓	✓	✓		
External screws, bolts and unpainted materials made of stainless steel (V4A)	**H06**	✓	✓	✓	✓	✓	✓	✓	✓	✓	✓	✓	✓	✓	✓		
Rust-resistant screws (externally)	**H07**	✓	✓	✓	✓	✓	✓	✓	✓	✓	✓	✓	✓	✓	✓		
IP66 degree of protection	**H19**	✓	✓	✓	✓	✓	✓	✓	✓	✓	✓	✓	✓	✓	✓		
IP65 degree of protection	**H20**	✓	✓	✓	✓	✓	✓	✓	✓	✓	✓	✓	✓	✓	✓		
IP56 degree of protection	**H22**	✓	✓	✓	✓	✓	✓	✓	✓	✓	✓	✓	✓	✓	✓		
Drive-end seal for flange-mounting motors, oil-tight to 0.1 bar	**H23**	✓	✓	✓	✓	✓	✓	✓	✓	✓	✓	✓	✓	✓	✓	Not for:	Combination with type of construction code letters H, L, Y (14th position of the Article No.)
Prepared for Adjustment screws for feet in horizontal installation	**H30**	–	–	–	–	–	–	–	✓	✓	✓	✓	✓	✓	✓		
Coolant temperature and installation altitude																	
Coolant temperature –40 to +40 °C	**D03**	✓	✓	✓	✓	✓	✓	✓	✓	✓	✓	✓	✓	✓	✓		
Coolant temperature –55 to +40 °C	**D05**	✓	✓	✓	✓	✓	✓	✓	✓	✓	✓	✓	✓	✓	✓	Only for:	1MB..6. Ex db IIB
Versions in accordance with standards and specifications																	
Motor without CE marking for export outside EEA	**D22**	○	○	○	○	○	○	○	○	○	○	○	○	○	○		
Ex certification for China	**D32**	✓	✓	✓	✓	✓	✓	✓	✓	✓	✓	✓	✓	✓	✓		
China Energy Efficiency Label	**D34**	○	○	○	○	○	○	○	○	○	○	○	○	○	○		
EAC Ex certificate for the Eurasian Customs Union	**D35**	✓	✓	✓	✓	✓	✓	✓	✓	✓	✓	✓	✓	✓	✓		
IECEx certification	**D37**	✓	✓	✓	✓	✓	✓	✓	✓	✓	✓	✓	✓	✓	✓		
MEPS Australia	**D70**	✓	✓	✓	✓	✓	✓	✓	✓	✓	✓	✓	✓	✓	✓		
Ex certification India (PESO)	**D75**	✓	✓	✓	✓	✓	✓	✓	✓	✓	✓	✓	✓	✓	–	Only for:	1MB..5. Ex db IIC
UKCA-Ex-certification		□	□	□	□	□	□	□	□	□	□	□	□	□	□		
Ex certification UAE (ECAS Ex)	**D78**	✓	✓	✓	✓	✓	✓	✓	✓	✓	✓	✓	✓	✓	✓	Only for:	1MB..5. Ex db IIC
Bearings and lubrication																	
Regreasing device with M10 × 1 grease nipple according to DIN 71412-A	**L19**	–	–	–	–	–	–	✓	✓	✓	✓	✓	○	○	○		
Located bearing DE	**L20**	□	□	□	□	□	□	□	□	□	□	□	□	□	□		
Located bearing NDE	**L21**	✓	✓	✓	✓	✓	✓	✓	✓	✓	✓	✓	✓	✓	✓		
Bearing design for increased cantilever forces	**L22**	–	–	–	–	–	–	✓	✓	✓	✓	✓	✓	✓	✓		
Regreasing device	**L23**	–	–	–	–	–	–	✓	✓	✓	✓	✓	□	□	□		
Bearing for high axial tension forces	**L34**	–	–	–	✓	✓	✓	✓	✓	✓	✓	✓	✓	✓	✓	Only for:	1MB..6. Ex db IIC
Bearing for high axial tension and thrust forces	**L35**	–	–	–	–	–	–	✓	✓	✓	✓	–	–	–	–	Only for:	1MB..6. Ex db IIC
Bearing insulation NDE	**L51**	–	–	–	–	–	–	✓	✓	✓	✓	✓	✓	✓	✓		
Measuring nipple for SPM shock pulse measurement for bearing inspection	**Q01**	–	–	–	✓	✓	✓	✓	✓	✓	✓	✓	✓	✓	✓		
Balance and vibration severity																	
Vibration severity grade A		□	□	□	□	□	□	□	□	□	□	□	□	□	□		
Vibration severity grade B	**L00**	✓	✓	✓	✓	✓	✓	✓	✓	✓	✓	✓	✓	✓	✓		
Half-key balancing		□	□	□	□	□	□	□	□	□	□	□	□	□	□		
Balancing without feather key	**L01**	✓	✓	✓	✓	✓	✓	✓	✓	✓	✓	✓	✓	✓	✓		
Full-key balancing	**L02**	✓	✓	✓	✓	✓	✓	✓	✓	✓	✓	✓	✓	✓	✓		

For legends, see page 6/115.

© Innomotics 2024

Innomotics XP 1MB1, 1MB5 explosion-protected motors

Cast-iron series 1MB.55., 1MB.853, 1MB.56., 1MB.863

Special versions	Additional identification code -Z with order code and plain text if required	Frame size														Motor version		
		71	80	90	100	112	132	160	180	200	225	250	280	315	355			
		1MB1.5., 1MB1.6.														IEC	Ex db, Ex db eb (Zone 1)	IE3
												1MB55..						
					1MB18.3													
												1MB58.3						
1MB..5. - . . . . . - . . . . -Z 1MB..6. - . . . . . - . . . . -Z	Order code																	
Shaft and rotor																		
Shaft extension with standard dimensions, without feather keyway	**L04**	✓	✓	✓	✓	✓	✓	✓	✓	✓	✓	✓	✓	✓	✓			
Standard, cylindrical shaft extension (second shaft extension) NDE acc. to EN 50347	**L05**	✓	✓	✓	✓	✓	✓	✓	✓	✓	✓	✓	✓	✓	✓			
Standard shaft made of stainless steel (e.g. 1.4021)	**L06**	✓	✓	✓	✓	✓	✓	✓	✓	✓	✓	✓	✓	✓	✓			
Shaft extension run-out in accordance with IEC 60072-1 precision class	**L07**	✓	✓	✓	✓	✓	✓	✓	✓	✓	✓	✓	✓	✓	✓			
Shaft extension run-out, concentricity and perpendicularity in accordance with IEC 60072-1 precision class for flange-mounted motors	**L08**	✓	✓	✓	✓	✓	✓	✓	✓	✓	✓	✓	✓	✓	✓			
Non-standard cylindrical shaft extension, DE	**Y58 •** and customer specifications	✓	✓	✓	✓	✓	✓	✓	✓	✓	✓	✓	✓	✓	✓			
Non-standard cylindrical shaft extension, NDE	**Y59 •** and customer specifications	✓	✓	✓	✓	✓	✓	✓	✓	✓	✓	✓	✓	✓	✓			
Heating and ventilation																		
Metal fan made of brass	**F68**	✓	✓	✓	✓	✓	✓	✓	✓	✓	✓	✓	✓	✓	✓			
Metal external fan	**F76**	✓	✓	✓	✓	✓	✓	✓	✓	✓	✓	✓	✓	✓	☐			
Anti-condensation heating for 230 V (2 terminals)	**Q02**	✓	✓	✓	✓	✓	✓	✓	✓	✓	✓	✓	✓	✓	✓			
Anti-condensation heating for 115 V (2 terminals)	**Q03**	✓	✓	✓	✓	✓	✓	✓	✓	✓	✓	✓	✓	✓	✓			
Anti-condensation heating for 220 V (2 terminals)	**Q04**	✓	✓	✓	✓	✓	✓	✓	✓	✓	✓	✓	✓	✓	✓			
Separately driven fan with non-standard voltage and/or frequency	**Y81 •** and customer specifications	–	–	–	–	–	–	–	–	–	✓	✓	✓	✓	✓			
Rating plate and additional rating plates																		
Second rating plate, loose	**M10**	✓	✓	✓	✓	✓	✓	✓	✓	✓	✓	✓	✓	✓	✓			
Rating plate, stainless steel	**M11**	☐	☐	☐	☐	☐	☐	☐	☐	☐	☐	☐	☐	☐	☐			
Additional rating plate with deviating rating plate data	**Y80 •** and customer specifications	✓	✓	✓	✓	✓	✓	✓	✓	✓	✓	✓	✓	✓	✓			
Additional rating plate with customer specifications	**Y82 •** and customer specifications	✓	✓	✓	✓	✓	✓	✓	✓	✓	✓	✓	✓	✓	✓			
Additional information on rating plate and on package label (max. 20 characters)	**Y84 •** and customer specifications	✓	✓	✓	✓	✓	✓	✓	✓	✓	✓	✓	✓	✓	✓			
Extension of the liability for defects																		
Extension of the liability for defects period by 12 months to a total of 24 months (2 years) from delivery	**Q80**	✓	✓	✓	✓	✓	✓	✓	✓	✓	✓	✓	✓	✓	✓			
Extension of the liability for defects period by 24 months to a total of 36 months (3 years) from delivery	**Q82**	✓	✓	✓	✓	✓	✓	✓	✓	✓	✓	✓	✓	✓	✓			

For legends, see page 6/115.

© Innomotics 2024

Innomotics XP 1MB1, 1MB5 explosion-protected motors

Cast-iron series 1MB.55., 1MB.853, 1MB.56., 1MB.863

Special versions	Additional identification code **-Z** with order code and plain text if required	Frame size														Motor version		
		71	**80**	**90**	**100**	**112**	**132**	**160**	**180**	**200**	**225**	**250**	**280**	**315**	**355**			
		1MB1.5., 1MB1.6.														IEC	Ex db, Ex db eb (Zone 1)	IE3
												1MB55..						
					1MB18.3													
1MB..5. - . . . . . - . . . . -Z												**1MB58.3**						
1MB..6. - . . . . . - . . . . -Z	Order code																	
Packaging, safety notes, documentation and test certificates																		
Inspection certificate 3.1 according to EN 10204	**B02**	✓	✓	✓	✓	✓	✓	✓	✓	✓	✓	✓	✓	✓	✓			
Document – Electrical datasheet	**B60**	✓	✓	✓	✓	✓	✓	✓	✓	✓	✓	✓	✓	✓	✓			
Document – Order dimensional drawing	**B61**	✓	✓	✓	✓	✓	✓	✓	✓	✓	✓	✓	✓	✓	✓			
Standard test (routine test) with acceptance	**B65**	✓	✓	✓	✓	✓	✓	✓	✓	✓	✓	✓	✓	✓	✓			
Noise measurement without load with octave band analysis, without acceptance	**B71**	✓	✓	✓	✓	✓	✓	✓	✓	✓	✓	✓	✓	✓	✓			
Noise measurement without load with octave band analysis, with acceptance	**B72**	✓	✓	✓	✓	✓	✓	✓	✓	✓	✓	✓	✓	✓	✓			
Remote acceptance	**B77**	–	–	–	–	–	–	–	–	–	✓	✓	✓	✓	✓			
Hybrid acceptance	**B78**	–	–	–	–	–	–	–	–	–	✓	✓	✓	✓	✓			
Type test with heat run for horizontal motors, without acceptance	**B82**	✓	✓	✓	✓	✓	✓	✓	✓	✓	✓	✓	✓	✓	✓			
Type test with heat run for horizontal motors, with acceptance	**B83**	✓	✓	✓	✓	✓	✓	✓	✓	✓	✓	✓	✓	✓	✓			
"Basic" documentation package	**B90**	✓	✓	✓	✓	✓	✓	✓	✓	✓	✓	✓	✓	✓	✓			
"Advanced" documentation package	**B91**	✓	✓	✓	✓	✓	✓	✓	✓	✓	✓	✓	✓	✓	✓			
"Projects" documentation package	**B92**	✓	✓	✓	✓	✓	✓	✓	✓	✓	✓	✓	✓	✓	✓			
Wire-lattice pallet packaging	**B99**	○	○	○	○	○	○	○	–	–	–	–	–	–	–			

☐ Standard version
○ Without additional charge
● This order code only determines the price of the version – Additional plain text is required.
✓ With additional charge
– Not possible

Note:
The catalog provides an overview of the available motor options but doesn't detail the correct logic combinations.
For a customized selection tailored to your specific requirements, please use the SPC at the following address:
configurator.innomotics.com

© Innomotics 2024

Innomotics XP 1MB1, 1MB5 explosion-protected motors

Cast-iron series 1MB55.4, 1MB55.3, 1MB58.3

Selection and ordering data

Special versions	Additional identification code **-Z** with order code and plain text if required	Frame size				Motor version		
		315	**355**	**400**	**450**			
		1MB55 . 4				IEC	Ex ec, Ex tc, Ex tb (Zonen 2, 22 und 21)	IE4
		1MB55 . 3						IE3
1MB5 . . . - . . . . . - . . . . -Z	Order code			**1MB58 . 3**				
Explosion-protected version								
Version additionally for dust Ex tc – Zone 22	**B30**	✓	✓	✓	✓	Only for:	1MB553. - Ex ec (Zone 2) frame size 315 and 355	
Version IIC with stamping of IIB	**B31**	O	O	✓	✓	Only for:	1MB553. - Ex ec (Zone 2) frame size 315 and 355	
VIK version	**C02**	✓	✓	✓	✓	Only for:	1MB553. - Ex ec (Zone 2) frame size 315 and 355	
Version for converter operation								
Version for converter operation in the basic version with SINAMICS G120 operating data with PM240-2	**B40**	O. R.	O. R.	O. R.	O. R.			
Version for converter operation in the basic version with SINAMICS S150 operating data	**B41**	O. R.	O. R.	O. R.	O. R.			
Version for converter operation with power data on the PWM converter	**B43**	O. R.	O. R.	O. R.	O. R.			
Operating data such as the **B40** order code with alternative SINAMICS converter on the rating plate _ G120 with PM230 _ G120 with PM240 _ G120C _ G120P with PM230 _ G120P with PM240-2 _ G120P with PM240P-2 _ G120P with PM330 _ G130, G150, G180 _ S120 (BLM/SLM) _ V20 Operating data such as order code **B41** with alternative SINAMICS converters on the rating plate _ S120 (ALM)	**Y68 •** and converter type	O. R.	O. R.	O. R.	O. R.			
Motor protection								
1 or 3 PTC thermistors – for tripping (2 terminals)	**Q11**	✓	✓	✓	✓	Not for:	Combination with motor protection code letter B (15th position of the Article No.)	
2 or 6 PTC thermistors – for alarm and tripping (4 terminals)	**Q12**	✓	✓	✓	✓	Not for:	Combination with motor protection code letter C (15th position of the Article No.)	
3 NTC thermistors – for tripping (6 terminals)	**Q21**	–	–	✓	✓	Not for:	Combination with motor protection code letter F (15th position of the Article No.)	
1 Pt1000 resistance thermometer (2 terminals)	**Q35**	✓	✓	✓	✓			
2 Pt1000 resistance thermometers (4 terminals)	**Q36**	✓	✓	✓	✓			
6 Pt1000 resistance thermometers (12 terminals)	**Q37**	–	–	✓	✓			
3 Pt100 resistance thermometers (6 terminals)	**Q60**	✓	✓	✓	✓	Not for:	Combination with motor protection code letter H (15th position of the Article No.)	
6 Pt100 resistance thermometers (12 terminals)	**Q61**	✓	✓	✓	✓	Not for:	Combination with motor protection code letter J (15th position of the Article No.)	
1 Pt100 resistance thermometer (2 terminals)	**Q62**	✓	✓	✓	✓			
3 Pt100 resistance thermometers (9 terminals)	**Q63**	✓	✓	✓	✓			
6 Pt100 resistance thermometers (18 terminals)	**Q64**	✓	✓	✓	✓			
2 Pt100 resistance thermometers in basic configuration for bearings (4 terminals)	**Q72**	✓	✓	✓	✓			
2 Pt100 resistance thermometers for bearings (6 terminals)	**Q78**	✓	✓	✓	✓			
2 Pt100 double resistance thermometers for bearings (12 terminals)	**Q79**	✓	✓	✓	✓			

For legends see page 6/120.

© Innomotics 2024

Innomotics XP 1MB1, 1MB5 explosion-protected motors

Cast-iron series 1MB55.4, 1MB55.3, 1MB58.3

Special versions	Additional identification code **-Z** with order code and plain text if required	Frame size				Motor version		
		315	**355**	**400**	**450**			
		1MB55 . 4				IEC	Ex ec, Ex tc, Ex tb (Zonen 2, 22 und 21)	IE4
		1MB55 . 3						IE3
1MB5 . . . - . . . . . - . . . . -Z	Order code			**1MB58 . 3**				
Motor connection and terminal box								
External grounding		☐	☐	☐	☐			
Terminal box at NDE	**H08**	✓	✓	✓	✓			
Two terminal boxes at NDE	**H09**	✓	✓	✓	✓			
Second external grounding	**H70**	✓	✓	✓	✓			
Connected in star for dispatch	**M01**	✓	✓	✓	O. R			
Connected in delta for dispatch	**M02**	✓	✓	✓	O. R			
Subsequently rotatable main terminal box	**R09**	✓	✓	✓	✓			
Rotation of the terminal box through 90°, entry from DE	**R10**	✓	✓	✓	✓	Not for:	Combination with type of construction code letters F, G, J (14th position of the Article No.)	
Rotation of the terminal box through 90°, entry from NDE	**R11**	✓	✓	✓	✓			
Rotation of the terminal box through 180°	**R12**	✓	✓	✓	✓			
One EMC cable gland	**R14**	✓	✓	–	–			
One metal cable gland	**R15**	✓	✓	–	–			
EMC cable gland, maximum configuration	**R16**	–	–	✓	✓			
Stud terminals for cable connection, accessories pack (3 items)	**R17**	✓	✓	–	–	Only for:	1MB551. - Ex ec (Zone 21) 1MB552. - Ex ec (Zone 22) frame size 315 and 355	
Metal cable gland, maximum configuration	**R18**	✓	✓	✓	✓			
Saddle terminal for connection without cable lug, accessories pack	**R19**	✓	✓	✓	✓	Only for:	1MB551. - Ex ec (Zone 21) 1MB552. - Ex ec (Zone 22) frame size 315 and 355	
		☐	☐	–	–	Only for:	1MB553. - Ex ec (Zone 2) frame size 315 and 355	
Larger terminal box	**R50**	✓	–	✓	✓			
Drilled removable entry plate	**R52**	✓	✓	✓	✓			
Undrilled removable entry plate		–	–	☐	☐			
Cast-iron auxiliary terminal box (small)	**R62**	✓	✓	✓	✓			
Cast-iron auxiliary terminal box (large)	**R63**	✓	✓	✓	✓			
Stainless steel auxiliary terminal box (large)	**R65**	–	–	✓	✓			
Non-standard threaded through hole (metric, NPT or G thread)	**Y61 •** and customer specifications	✓	✓	✓	✓			
Windings and insulation								
Temperature class 155 (F), utilized acc. to 155 (F), with service factor		–	–	☐	☐			
Temperature class 155 (F), utilized acc. to 130 (B), coolant temperature 45 °C, derating approx. 4 %	**N05**	✓	✓	✓	✓			
Temperature class 155 (F), utilized acc. to 130 (B), coolant temperature 50 °C, derating approx. 8 %	**N06**	✓	✓	✓	✓			
Temperature class 155 (F), utilized acc. to 130 (B), coolant temperature 55 °C, derating approx. 13 %	**N07**	✓	✓	✓	✓			
Temperature class 155 (F), utilized acc. to 130 (B), coolant temperature 60 °C, derating approx. 18 %	**N08**	✓	✓	✓	✓			
Increased air humidity/temperature with 30 to 60 g water per m^3 of air	**N30**	✓	✓	✓	✓			
Increased air humidity/temperature with 60 to 100 g water per m^3 of air	**N31**	✓	✓	✓	✓			
Temperature class 155 (F), utilized acc. to 130 (B), with higher coolant temperature and/or installation altitude	**Y50 •** CT .. °C or IA .... m above sea level	✓	✓	✓	✓	Only for:	Installation Altitude < 2000 m	
Colors and paint finish								
Standard paint finish C2 in RAL 7030 stone gray		☐	☐	☐	☐			
Unpainted (only cast-iron parts primed)	**S00**	O	O	O	O			
Unpainted, only primed	**S01**	✓	✓	✓	✓			
Special paint finish C3	**S02**	✓	✓	✓	✓			
Special paint finish sea air resistant C4	**S03**	✓	✓	✓	✓			

For legends see page 6/120.

© Innomotics 2024

Innomotics XP 1MB1, 1MB5 explosion-protected motors

Cast-iron series 1MB55.4, 1MB55.3, 1MB58.3

Special versions	Additional identification code **-Z** with order code and plain text if required	Frame size				Motor version		
		315	**355**	**400**	**450**			
		1MB55 . 4				IEC	Ex ec, Ex tc, Ex tb (Zonen 2, 22 und 21)	IE4
		1MB55 . 3						IE3
1MB5 . . . - . . . . . - . . . . -Z	Order code			**1MB58 . 3**				
Colors and paint finish (continued)								
Special paint finish for use offshore C5	**S04**	✓	✓	✓	✓			
Internal coating	**S05**	✓	✓	✓	✓			
Top coat polyurethane	**S06**	✓	✓	☐	☐	Only for:	1MB553. - Ex ec (Zone 2) frame size 315 and 355	
Special paint finish C5mid with medium durability	**S08**	✓	✓	–	–			
Special paint finish CX for offshore with high durability	**S09**	✓	✓	–	–			
Paint finish in other standard RAL colors: RAL 1015, 3000, 5002, 5009, 5010, 5012, 5015, 6011, 7001, 7011, 7016, 7031, 7032, 7035, 7037, 8012, 9005, 9010 (see Catalog Section 1 "Introduction")	**Y53 •** and paint finish RAL....	✓	✓	✓	✓			
Paint finish in special RAL colors: For RAL colors, see "Special paint finish in special RAL colors" (see Catalog Section 1 "Introduction")	**Y56 •** and paint finish RAL....	✓	✓	✓	✓			
Non-standard colors Colors see "Paint finish in non-standard colors (see Catalog Section 1 "Introduction")	**Y66 •** and paint finish	✓	✓	✓	✓			
Modular technology – Basic versions								
Mounting of separately driven fan	**F70**	✓	✓	✓	✓			
Special technology								
Mounting of LL 841 (HTL); 1024 I explosion-protected rotary pulse encoder	**G30**	✓	✓	✓	✓			
Mounting of a special type of rotary pulse encoder	**Y70 •** and customer specifications	O. R.	O. R.	O. R.	O. R.			
Mechanical version and degrees of protection								
Low-noise version for 2-pole motors with clockwise direction of rotation	**F77**	✓	✓	☐	☐	Only for:	2-pole motors	
Low-noise version for 2-pole motors with counterclockwise direction of rotation	**F78**	✓	✓	O	O	Only for:	2-pole motors	
Prepared for mounted components, centering hole only		–	–	☐	☐			
Mechanical protection for encoder	**G43**	O. R.	O. R.	✓	✓			
Protective cover	**H00**	✓	✓	✓	✓			
Vibration-proof version; vibration resistance to Class 3M4 according to IEC 60721-3-3:1994	**H02**	✓	✓	–	–			
Condensation drainage holes		☐	☐	☐	☐			
Rust-resistant screws (externally)	**H07**	✓	✓	✓	✓			
IP66 degree of protection	**H19**	✓	✓	–	–			
IP65 degree of protection	**H20**	✓	✓	✓	✓	Only for:	1MB553. - Ex ec (Zone 2) frame size 315 and 355	
IP56 degree of protection	**H22**	✓	✓	✓	✓	Only for:	1MB553. - Ex ec (Zone 2) frame size 315 and 355	
Drive-end seal for flange-mounting motors, oil-tight to 0.1 bar	**H23**	✓	✓	–	–			
Sealing ring made of fluoroelastomer (FKM)	**H25**	✓	✓	✓	✓			
Prepared for adjustment screws for feet in horizontal installation	**H30**	O. R.	O. R.	–	–			
Increased corrosion protection for external components	**H90**	–	–	✓	✓			
Coolant temperature and installation altitude								
Coolant temperature −40 to +40 °C	**D03**	✓	✓	✓	✓			
Versions in accordance with standards and specifications								
Electrical according to NEMA MG1-12		–	–	☐	☐			
IECEx certificate	**D37**	✓	✓	✓	✓			
Meps Australia	**D70**	✓	–	–	–	Only for:	1MB55.3	
UKCA-Ex-certification		☐	☐	☐	☐			

For legends see page 6/120.

© Innomotics 2024

Innomotics XP 1MB1, 1MB5 explosion-protected motors

Cast-iron series 1MB55.4, 1MB55.3, 1MB58.3

Special versions	Additional identification code **-Z** with order code and plain text if required	Frame size				Motor version		
		315	**355**	**400**	**450**			
		1MB55 . 4				IEC	Ex ec, Ex tc, Ex tb (Zonen 2, 22 und 21)	IE4
		1MB55 . 3						IE3
1MB5 . . . - . . . . . - . . . . -Z	Order code			**1MB58 . 3**				
Bearings and lubrication								
Regreasing device with M10 × 1 grease nipple according to DIN 71412-A	**L19**	O	O	O	O			
Located bearing DE	**L20**	✓	✓	☐	☐			
Located bearing NDE	**L21**	☐	☐	✓	✓			
Bearing design for increased cantilever forces	**L22**	✓	✓	O. R.	O. R.			
Regreasing device		☐	☐	☐	☐			
Bearings reinforced at both ends for DE and NDE, bearing size 63	**L25**	☐	☐	–	–			
Drainage for used grease	**L30**	✓	☐	O. R.	O. R.			
Bearing insulation DE	**L50**	✓	✓	✓	✓			
Bearing insulation NDE	**L51**	✓	✓	✓	✓			
Measuring nipple for SPM shock pulse measurement for bearing inspection	**Q01**	✓	✓	✓	✓			
Motor design VSD, higher speed up to .... rpm, vibration level .. acc. IEC60034-14, with or w/o routine test	**Y37**	O. R.	O. R.	–	–			
Balance and vibration severity								
Vibration severity grade A		☐	☐	☐	☐			
Vibration severity grade B	**L00**	✓	✓	✓	✓	Only for:	2-pole motors frame size 315 and 355	
Half-key balancing (standard)		☐	☐	☐	☐			
Balancing without feather key	**L01**	✓	✓	✓	✓			
Full-key balancing	**L02**	✓	✓	✓	✓			
Shaft and rotor								
Shaft extension with standard dimensions, without feather keyway	**L04**	✓	✓	✓	✓			
Standard, cylindrical shaft extension (second shaft extension) NDE acc. to EN 50347	**L05**	✓	✓	✓	✓			
Standard shaft made of stainless steel (e.g. 1.4021)	**L06**	✓	✓	–	–			
Shaft extension run-out in accordance with IEC 60072-1 precision class	**L07**	✓	✓	–	–			
Shaft extension run-out, concentricity and perpendicularity in accordance with IEC 60072-1 precision class for flange-mounted motors	**L08**	✓	✓	✓	✓			
Non-standard cylindrical shaft extension, DE	**Y58 •** and customer specifications	✓	✓	✓	✓			
Non-standard cylindrical shaft extension, NDE	**Y59 •** and customer specifications	✓	✓	✓	✓			
Special shaft steel	**Y60 •** and customer specifications	O. R.	O. R.	O. R.	O. R.			
Heating and ventilation								
Metal fan made of brass	**F68**	O. R..	O. R.	–	–			
Sheet metal fan cover		☐	☐	☐	☐			
Metal external fan		☐	☐	☐	☐			
Without external fan and without fan cover	**F90**	–	–	✓	✓			
Anti-condensation heating for 230 V (2 terminals)	**Q02**	✓	✓	✓	✓			
Anti-condensation heating for 115 V (2 terminals)	**Q03**	✓	✓	✓	✓			
Anti-condensation heating for 400 V (2 terminals)	**Q06**	✓	✓	✓	✓			
Separately driven fan with non-standard voltage and/or frequency	**Y81 •** and customer specifications	O. R.	O. R.	O. R.	O. R.			
Rating plate and additional rating plates								
Second rating plate, loose	**M10**	✓	✓	✓	✓			
Rating plate, stainless steel		☐	☐	☐	☐			
Additional rating plate with deviating rating plate data	**Y80 •** and customer specifications	✓	✓	✓	✓			

For legends see page 6/120.

© Innomotics 2024

Innomotics XP 1MB1, 1MB5 explosion-protected motors

Cast-iron series 1MB55.4, 1MB55.3, 1MB58.3

Special versions	Additional identification code **-Z** with order code and plain text if required	Frame size				Motor version		
		315	**355**	**400**	**450**			
		1MB55 . 4				IEC	Ex ec, Ex tc, Ex tb (Zonen 2, 22 und 21)	IE4
		1MB55 . 3						IE3
1MB5 . . . - . . . . . - . . . . -Z	Order code			**1MB58 . 3**				
Rating plate and additional rating plates (continued)								
Additional rating plate with customer specifications	**Y82 •** and customer specifications	✓	✓	✓	✓			
Additional information on rating plate and on package label (max. 20 characters)	**Y84 •** and customer specifications	✓	✓	✓	✓			
Adhesive label, supplied loose (printed with: Article No., Serial No.: 2 lines of text)	**Y85 •** and customer specifications	✓	✓	–	–			
Extension of the liability for defects								
Extension of the liability for defects by 12 months to a total of 24 months (2 years) from delivery	**Q80**	✓	✓	✓	✓			
Extension of the liability for defects by 18 months to a total of 30 months (2.5 years) from delivery	**Q81**	✓	✓	✓	✓			
Extension of the liability for defects by 24 months to a total of 36 months (3 years) from delivery	**Q82**	✓	✓	✓	✓			
Extension of the liability for defects by 30 months to a total of 42 months (3.5 years) from delivery	**Q83**	–	–	✓	✓			
Extension of the liability for defects by 36 months to a total of 48 months (4 years) from delivery	**Q84**	–	–	✓	✓			
Extension of the liability for defects by 48 months to a total of 60 months (5 years) from delivery	**Q85**	–	–	✓	✓			
Packaging, safety notes, documentation and test certificates								
Inspection certificate 3.1 according to EN 10204	**B02**	✓	✓	✓	✓			
Equivalent circuit diagram	**B51**	✓	✓	✓	✓			
Starting diagram (torque vs. speed and current vs. speed)	**B52**	✓	✓	✓	✓			
Document – Electrical datasheet	**B60**	✓	✓	✓	✓			
Document – Order dimensional drawing	**B61**	✓	✓	✓	✓			
Standard test (routine test) with acceptance	**B65**	✓	✓	✓	✓			
Temperature test without acceptance	**B67**	✓	✓	✓	✓			
Temperature test with acceptance	**B68**	✓	✓	✓	✓			
Remote acceptance	**B77**	✓	✓	✓	✓			
Hybrid acceptance	**B78**	✓	✓	✓	✓			
Type test with heat run for vertical motors, without acceptance	**B80**	✓	✓	✓	✓			
Type test with heat run for vertical motors, with acceptance	**B81**	✓	✓	✓	✓			
Type test with heat run for horizontal motors, without acceptance	**B82**	✓	✓	✓	✓			
Type test with heat run for horizontal motors, with acceptance	**B83**	✓	✓	✓	✓			
"Basic" documentation package	**B90**	✓	✓	✓	✓			
"Advanced" documentation package	**B91**	✓	✓	✓	✓			
"Projects" documentation package	**B92**	✓	✓	✓	✓			

☐ Standard version
O Without additional charge
• This order code only determines the price of the version – Additional plain text is required.
✓ With additional charge
O. R. Possible on request

Note:
The catalog provides an overview of the available motor options but doesn't detail the correct logic combinations. For a customized selection tailored to your specific requirements, please use the Siemens Product Configurator at the following address:
configurator.innomotics.com

© Innomotics 2024

Overview

Couplings for use in hazardous areas

The motor from Innomotics is connected to the machine or gear unit through a coupling. Flender is an important coupling manufacturer with a wide range of products.

For standard applications, Innomotics recommends that flexible couplings, types N-EUPEX and RUPEX or torsionally rigid couplings, types ARPEX and ZAPEX are used. For special applications, FLUDEX and ELPEX-S couplings are recommended. These coupling types are suitable for use in areas subject to explosion hazards and are offered with declaration of conformity and EU type-examination certificate according to Directive 2014/34/EU.

Available from:

Siemens contact partner - ordering from catalog
Siemens MD 10.1 "FLENDER Standard Couplings"

or

Flender GmbH
Kupplungswerk Mussum
Industriepark Bocholt
Schlavenhorst 100
46395 Bocholt, Germany
Phone +49 (2871) 922185
Fax +49 (2871) 922579

www.flender.com

Taper pins according to DIN 258 with threaded ends and constant taper lengths

Taper pins are used for components that are repeatedly removed. The drilled hole is conically ground using a conical reamer until the pin can be pushed in by hand until the cone shoulder lies approx. 3 to 4 mm above the rim of the hole.

It can then be driven in using a hammer until it is correctly seated. The pin is removed from the drilled hole by screwing on the nut and tightening it.

Standardized taper pins are commercially available.

For instance, available from:

Otto Roth GmbH & Co. KG
Rutesheimer Strasse 22
70499 Stuttgart, Germany
Phone +49 711 1388-0
Fax +49 711 1388-233

www.ottoroth.de
Email: info@ottoroth.de

Foundation blocks according to DIN 799

The foundation blocks are inserted into the stone foundation and embedded in concrete. They are used for fixing machines of medium size, slide rails, pedestal bearings, base frames, etc. After the fixing bolts have been unscrewed, the machines can be shifted without them having to be lifted.

When the machine is initially installed, the foundation blocks that are bolted to the machine (without washers) and fitted with taper pins are not embedded with concrete until the machine has been fully aligned. In this case, the machine is positioned 2 to 3 mm lower. The difference in shaft height is compensated by inserting shims on final installation. The taper pins safeguard the exact position of the machine when it is repeatedly removed and replaced without the need for realignment.

Available from:

Lütgert & Co. GmbH
Postfach 42 51
33276 Gütersloh, Germany
Phone +49 5241 7407-0
Fax +49 5241 7407-90

www.luetgert-antriebe.de
Email: info@luetgert-antriebe.de

Slide rails with fixing bolts and tensioning screws according to DIN 42923

Slide rails are used to tension the belt of a machine easily and conveniently when there is no belt-tensioning pulley. They are fixed to the base using stone bolts or foundation blocks.

The assignment of slide rails to motor size can be found in DIN 42923. For motors of frame sizes 355 to 450, there are no standardized slide rails (please inquire).

Available from:

Lütgert & Co. GmbH
Postfach 42 51
33276 Gütersloh, Germany
Phone +49 5241 7407-0
Fax +49 5241 7407-90

www.luetgert-antriebe.de
Email: info@luetgert-antriebe.de

© Innomotics 2024

More information

Replacement motors and repair parts

- Commitment to provide replacement motors and repair parts following delivery of the motor:
  - For up to 3 years after the delivery of the original motor, in the event of total motor failure – with regard to the mounting dimensions and functions – Innomotics will supply a comparable replacement motor (the type series may vary).
  - If a spare motor is supplied within the 3-year period, this does not mean that the warranty restarts.
  - Replacement motors delivered after the active production of the motor series are also identified as spare motors on the rating plate.
  - Spare parts are available only on request for these spare motors. Repair or replacement is not possible.
  - After a period of 3 years (after the delivery of the original motor), it is only possible to repair these motors (depending on the availability of the spare parts required).
  - For up to 5 years after the delivery of the original motor, spare parts will be available and for a further 5 years, Innomotics will provide information about spare parts and will supply documents when required.
- When repair parts are ordered, the following details must be provided:
  - Designation and part number
  - Article No. and factory number of the motor.
- For bearing types, see Catalog Section 1 "Introduction".
- Repair parts are available for 1MB1 motors on request.
- For standard components, a commitment to supply repaired parts does not apply.

You will find telephone numbers for other countries on our Internet site:
innomotics.com/hub/en/customer-service

© Innomotics 2024

Notes on the dimensions

Overview

- Dimension designations according to EN 50347 and IEC 60072.
- Fits
  The shaft extensions specified in the dimension tables (DIN 748) and centering spigot diameters (EN 50347) are machined with the following fits:

Dimension designation	ISO fit DIN ISO 286-2	
D, DA	to 30	j6
	over 30 to 50	k6
	over 50	m6
N	to 250	j6
	over 250	h6
F, FA		h9
S	flange (FF)	H17

The drilled holes of couplings and belt pulleys should have an ISO fit of at least H7.

Dimension K: nominal dimension according IEC 60072-1, negative deviation of tolerance H17 possible.

- Dimensional tolerances
  For the following dimension designations, the admissible deviations are given below:

Dimension designation	Dimension	Admissible deviation
H	to 250	– 0.5
	over 250	– 1.0
E, EA		– 0.5

Feather keyways and feather keys (dimensions GA, GC, F and FA) are made in compliance with DIN 6885 Part 1.

- All dimensions are specified in mm.
- The overall width of the motor is identical to the "AC" dimension.

Dimension sheet generator (within the SPC)

Overview

A dimensional drawing can be created in the "SPC" for every configurable motor.
A dimensional drawing can be requested for every other motor.

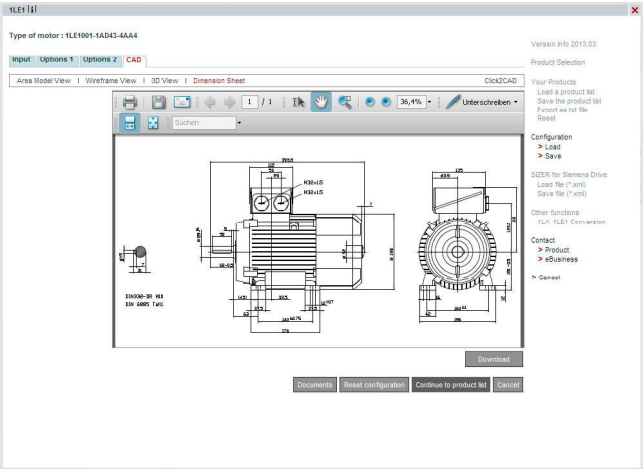

When a complete Article No. is entered with or without order codes, a dimensional drawing can be called up under the "Documentation" tab.

These dimensional drawings can be presented in different views and sections and printed. The corresponding dimension sheets can be exported, saved and processed further in DXF format (interchange/import format for CAD systems) or as bitmap graphics.

Online access in the Siemens Industry Mall

The "SPC" can be used on the Internet without installation.
configurator.innomotics.com

© Innomotics 2024

Innomotics XP 1MB1, 1MB5 explosion-protected motors

IE3 – 1MB1 with types of protection Ex tb, Ex tc, Ex ec – self-ventilated · Frame sizes 80 M to 160 L

Dimensional drawings

Type of construction IM B3

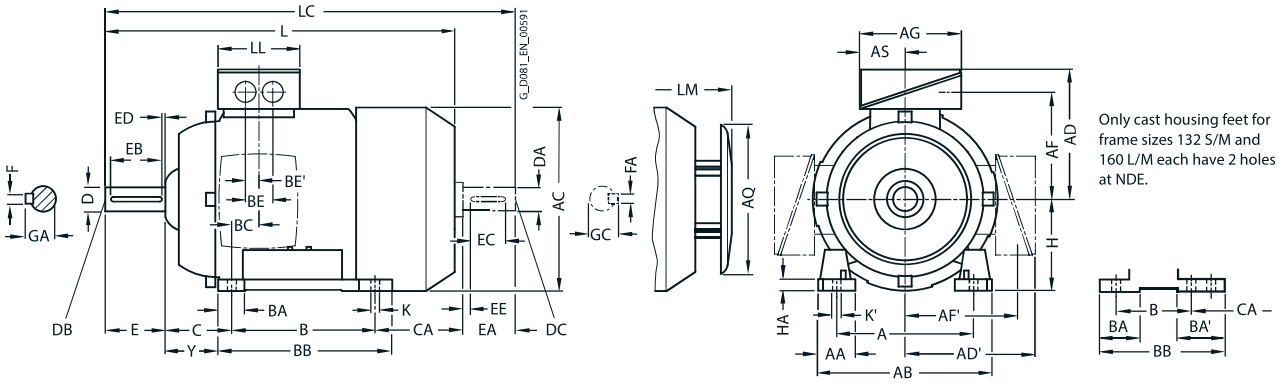

Types of construction IM B5 and IM V1

For flange dimensions, see page 1/59 (**Z** = the number of retaining holes)

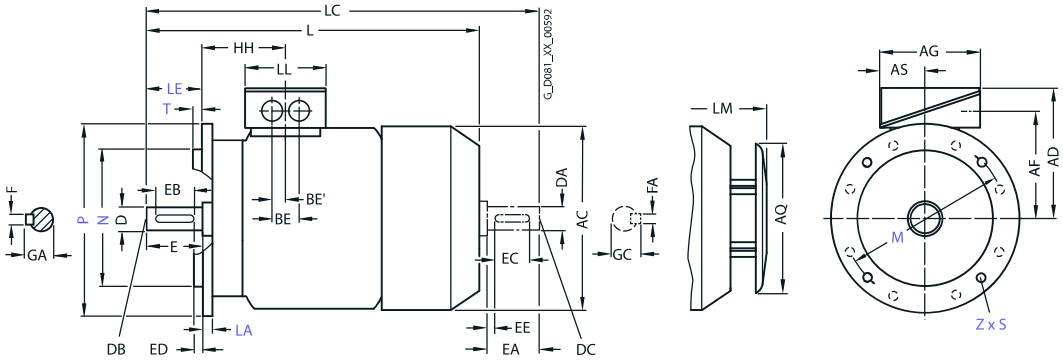

6

For motor			Dimension designation acc. to **IEC**																						
Frame size	Motor type 1MB10.3-	No. of poles	A	AA	**AB**	AC	**AD**	AD'	AF	AF'	AG	AQ	AS	B	BA	BA'	BB	BC	BE	BE'	C	CA	**H**	HA	Y
80 M	0DA2, 0DB2, 0DC3	2, 4, 6	125	30.5	**150**	159	**121**	121	96.5	96.5	93	155	43	100	32	32	118	23	36	18	50	113	**80**	8	41
	0DA3, 0DB3, 0DC3																								
90 S	All	2, 4, 6	140	30.5	**165**	178	**126**	126	101.5	101.5	93	155	43	100	33	33	143	22.5	36	18	56	159	**90**	10	47
90 L	All	2, 4, 6	140	30.5	**165**	178	**126**	126	101.5	101.5	93	155	43	125	33	33	143	22.5	36	18	56	199	**90**	10	47
100 L	All	2, 4	160	42	**196**	198	**166**	166	125.5	125.5	135	195	63.5	140	37.5	–	176	33.5	50	25	63	176	**100**	12	45
112 M	All	2, 4	190	46	**226**	222	**177**	177	136.5	136.5	135	195	63.5	140	35.4	–	176	26	50	25	70	155	**112**	12	52
132 S	1CA0, 1CC0	2, 6	216	53	**256**	262	**202**	202	159.5	159.5	155	260	70.5	140	38	76	218	26.5	48	24	89	128.5	**132**	15	69
	1CA1, 1CB0	2, 4														38	180					178.5			
132 M	1CC2	6	216	53	**256**	262	**202**	202	159.5	159.5	155	260	70.5	178	38	76	218	26.5	48	24	89	128.5	**132**	15	69
	1CB2, 1CC3	4, 6														38						178.5			
160 M	All	2, 4, 6	254	60	**300**	314	**236.5**	236.5	190	190	175	260	77.5	210	44	89	300	47	57	28.5	108	148	**160**	18	85
160 L	All	2, 4, 6	254	60	**300**	314	**236.5**	236.5	190	190	175	260	77.5	254	44	–	300	47	57	28.5	108	208	**160**	18	85

1) With screwed-on feet, dimension BA' is 43 mm.
2) With screwed-on feet, dimension BB is 180 mm.
3) With screwed-on feet, dimension BA' is 51 mm.
4) With screwed-on feet, dimension BB is 256 mm.

© Innomotics 2024

Innomotics XP 1MB1, 1MB5 explosion-protected motors

IE3 – 1MB1 with types of protection Ex tb, Ex tc, Ex ec – self-ventilated · Frame sizes 80 M to 160 L

Dimensional drawings

Type of construction IM B35

For flange dimensions, see page 1/59 (**Z** = the number of retaining holes)

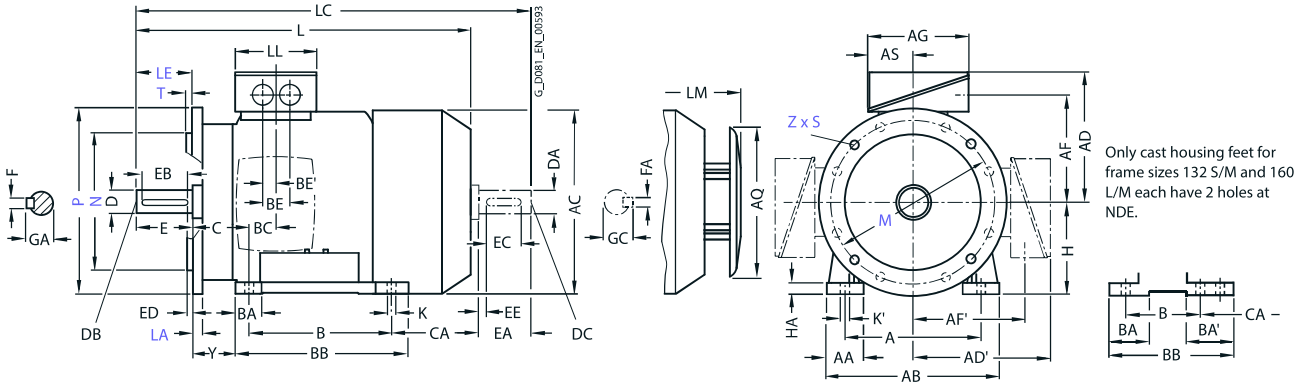

Type of construction IM B14

For flange dimensions, see page 1/59 (**Z** = the number of retaining holes)

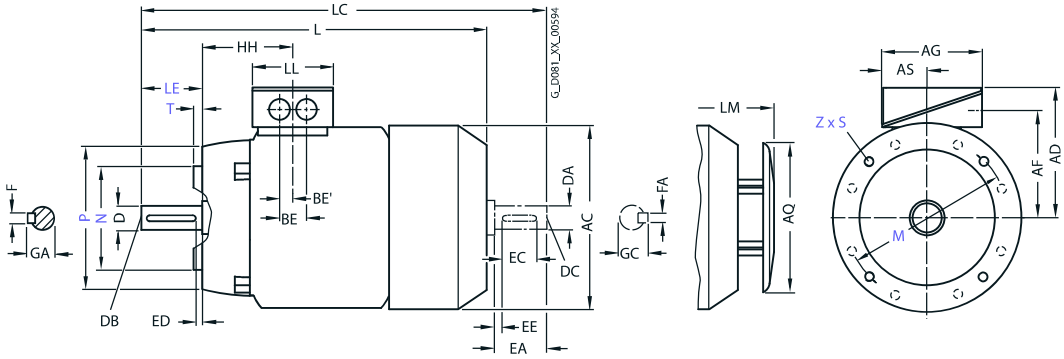

For motor			Dimension designation acc. to **IEC**							DE shaft extension							NDE shaft extension						
Frame size	Motor type 1MB10.3-	No. of poles	HH	K	K'	**L**	LC	LL	LM	D	DB	E	EB	ED	F	GA	DA	DC	EA	EC	EE	FA	GC
80 M	0DA2, 0DB2, 0DC3	2, 4, 6	73	9.5	13.5	**292**	343	79	328	19	M6	40	32	4	6	21.5	19	M6	40	32	4	6	21.5
	0DA3, 0DB3, 0DC3					**327**																	
90 S	All	2, 4, 6	78.5	10	14	**347**	405	79	383	24	M8	50	40	5	8	27	19	M6	40	32	4	6	21.5
90 L	All	2, 4, 6	78.5	10	14	**387**	445	79	383	24	M8	50	40	5	8	27	19	M6	40	32	4	6	21.5
100 L	All	2, 4	100.5	12	16	**418**	489	112	463.5	28	M10	60	50	5	8	31	24	M8	50	40	5	8	27
112 M	All	2, 4	100.5	12	16	**401**	475	112	447	28	M10	60	50	5	8	31	24	M8	50	40	5	8	27
132 S	1CA0, 1CC0	2, 6	115.5	12	16	**449.5**	535.5	130	516.5	38	M12	80	70	5	10	41	28	M10	60	50	5	8	31
	1CA1, 1CB0	2, 4				**499.5**	585.5		550.5														
132 M	1CC2	6	115.5	12	16	**449.5**	535.5	130	516.5	38	M12	80	70	5	10	41	28	M10	60	50	5	8	31
	1CB2, 1CC3	4, 6				**499.5**	585.5		550.5														
160 M	All	2, 4, 6	145	15	19	**586**	730	145	654	42	M16	110	90	10	12	45	42	M16	110	90	10	12	45
160 L	All	2, 4, 6	145	15	19	**646**	790	145	714	42	M16	110	90	10	12	45	42	M16	110	90	10	12	45

© Innomotics 2024

Innomotics XP 1MB1, 1MB5 explosion-protected motors

IE2, IE1 – 1MB1 with types of protection Ex tb, Ex tc, Ex ec – self-ventilated · Frame sizes 80 M to 160 L

Dimensional drawings

Type of construction IM B3

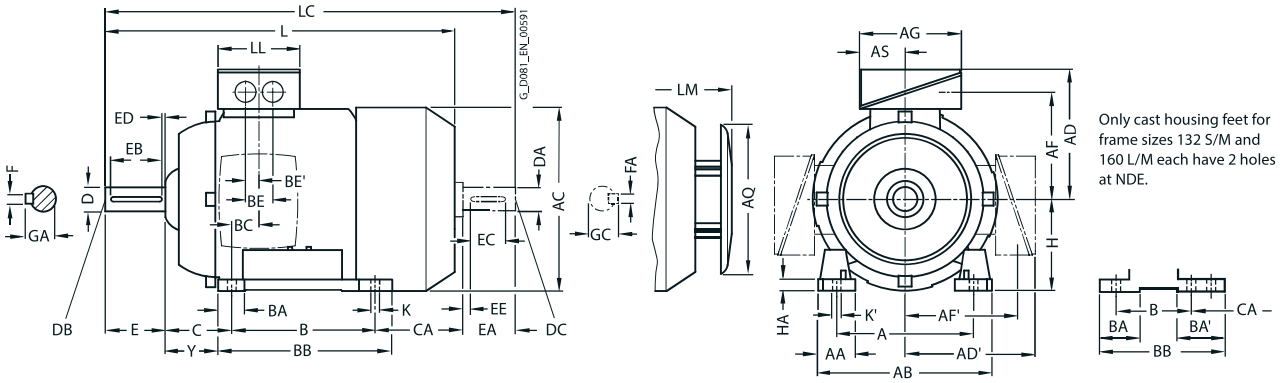

Types of construction IM B5 and IM V1

For flange dimensions, see page 1/59 (**Z** = the number of retaining holes)

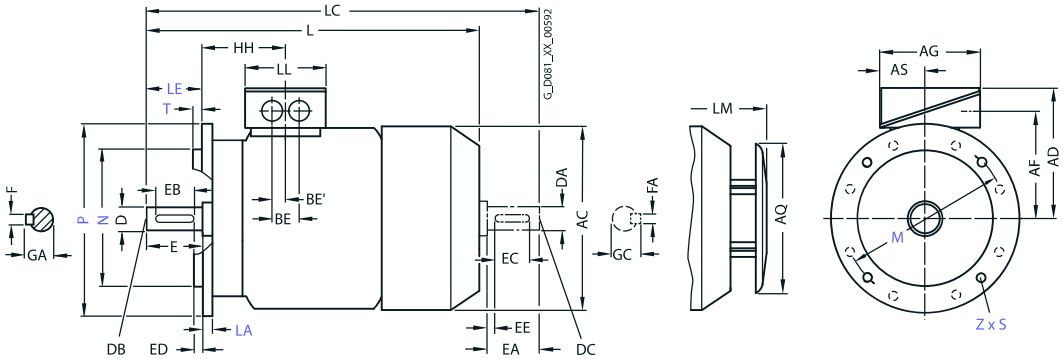

For motor			Dimension designation acc. to **IEC**																					
Frame size	Motor type 1MB10.1, 1MB10.2	No. of poles	A	AA	**AB**	AC	**AD**	AD'	AF	AF'	AG	AQ	AS	B	BA	BA'	BB	BC	BE	BE'	C	CA	**H**	HA	Y
80 M	1MB10.1	2, 4, 6	125	30.5	**150**	159	**149**	149	96.5	112.5	119.5	155	61.5	100	32	32	118	23	36	18	50	112.5	**80**	8	41
90 S	1MB10.1	2, 4, 6	140	30.5	**165**	178	**154**	154	101.5	117.5	119.5	155	62.5	100	33	54	143	22.5	36	18	56	159	**90**	10	47
90 L	1MB10.1	2, 4, 6	140	30.5	**165**	178	**154**	154	101.5	117.7	119.5	155	62.5	125	33	54	143	22.5	36	18	56	134	**90**	10	47
100 L	All	2, 4, 6, 8	160	42	**196**	198	**166**	166	125.5	125.5	135	195	63.5	140	37.5	37.5	176	33.5	50	25	63	141	**100**	12	45
112 M	All	2, 4, 6, 8	190	46	**226**	222	**177**	177	136.5	136.5	135	195	63.5	140	35.4	37.5	176	26	50	25	70	129.7	**112**	12	52
132 S	All	2, 4, 6, 8	216	53	**256**	262	**202**	202	159.5	159.5	155	260	70.5	140	38	76[1]	218[2]	26.5	48	24	89	128.5[3]	**132**	15	69
132 M	All	2, 4, 6, 8	216	53	**256**	262	**202**	202	159.5	159.5	155	260	70.5	178	38	76	218	26.5	48	24	89	128.5[3]	**132**	15	69
160 M	All	2, 4, 6, 8	254	60	**300**	314	**236.5**	236.5	190	190	175	260	77.5	210	44	89[4]	300[5]	47	57	28.5	108	148[6]	**160**	18	85
160 L	All	2, 4, 6, 8	254	60	**300**	314	**236.5**	236.5	190	190	175	260	77.5	254	44	89	300	47	57	28.5	108	148[6]	**160**	18	85

1) With screwed-on feet, dimension BA' is 38 mm.
2) With screwed-on feet, dimension BB is 180 mm.
3) With screwed-on feet, dimension CA is 166.5 mm.
4) With screwed-on feet, dimension BA' is 44 mm.
5) With screwed-on feet, dimension BB is 256 mm.
6) With screwed-on feet, dimension CA is 192 mm.

© Innomotics 2024

Innomotics XP 1MB1, 1MB5 explosion-protected motors

IE2, IE1 – 1MB1 with types of protection Ex tb, Ex tc, Ex ec – self-ventilated · Frame sizes 80 M to 160 L

Dimensional drawings

Type of construction IM B35

For flange dimensions, see page 1/59 (**Z** = the number of retaining holes)

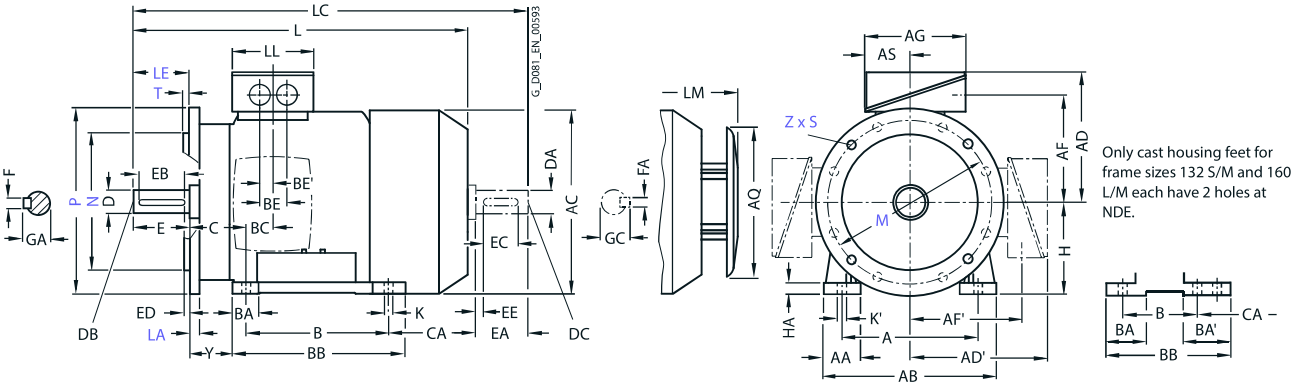

Type of construction IM B14

For flange dimensions, see page 1/59 (**Z** = the number of retaining holes)

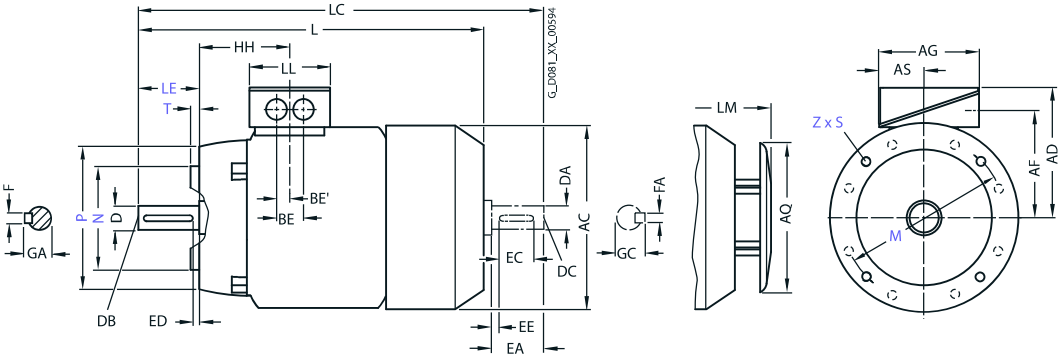

For motor			Dimension designation acc. to **IEC**							DE shaft extension							NDE shaft extension						
Frame size	Motor type 1MB10.1, 1MB10.2	No. of poles	HH	K	K'	**L**	LC	LL	LM	D	DB	E	EB	ED	F	GA	DA	DC	EA	EC	EE	FA	GC
80 M	1MB10.1	2, 4, 6	73	9.5	13.5	**253**	342.5	123	328	19	M6	40	32	4	6	21.5	19	M6	40	32	4	6	21.5
90 S/L	1MB10.1	2, 4, 6	78.5	10	14	**294.5**	405	123	383	24	M8	50	40	5	8	27	19	M6	40	32	4	6	21.5
90 L	1MB10.1	2, 4, 6	78.5	10	14	**294.5**	405	123	383	24	M8	50	40	5	8	27	19	M6	40	32	4	6	21.5
100 L	All	2, 4, 6, 8	96.5	12	16	**388.5**	454	112	428.5	28	M10	60	50	5	8	31	24	M8	50	40	5	8	27
112 M	All	2, 4, 6, 8	96	12	16	**382**	450	112	422	28	M10	60	50	5	8	31	24	M8	50	40	5	8	27
132 S	All	2, 4, 6, 8	115.5	12	16	**456.5**	535.5	130	516.5	38	M12	80	70	5	10	41	28	M10	60	50	5	8	31
132 M	All	2, 4, 6, 8	115.5	12	16	**456.5**	535.5	130	516.5	38	M12	80	70	5	10	41	28	M10	60	50	5	8	31
160 M	All	2, 4, 6, 8	155	15	19	**594**	730	145	654	42	M16	110	90	10	12	45	42	M16	110	90	10	12	45
160 L	All	2, 4, 6, 8	155	15	19	**594**	730	145	654	42	M16	110	90	10	12	45	42	M16	110	90	10	12	45

© Innomotics 2024

Innomotics XP 1MB1, 1MB5 explosion-protected motors

IE4, IE3 – 1MB5 with types of protection Ex tb, Ex tc, Ex ec – self-ventilated · Frame sizes 315 L to 450

Dimensional drawings

Type of construction IM B3

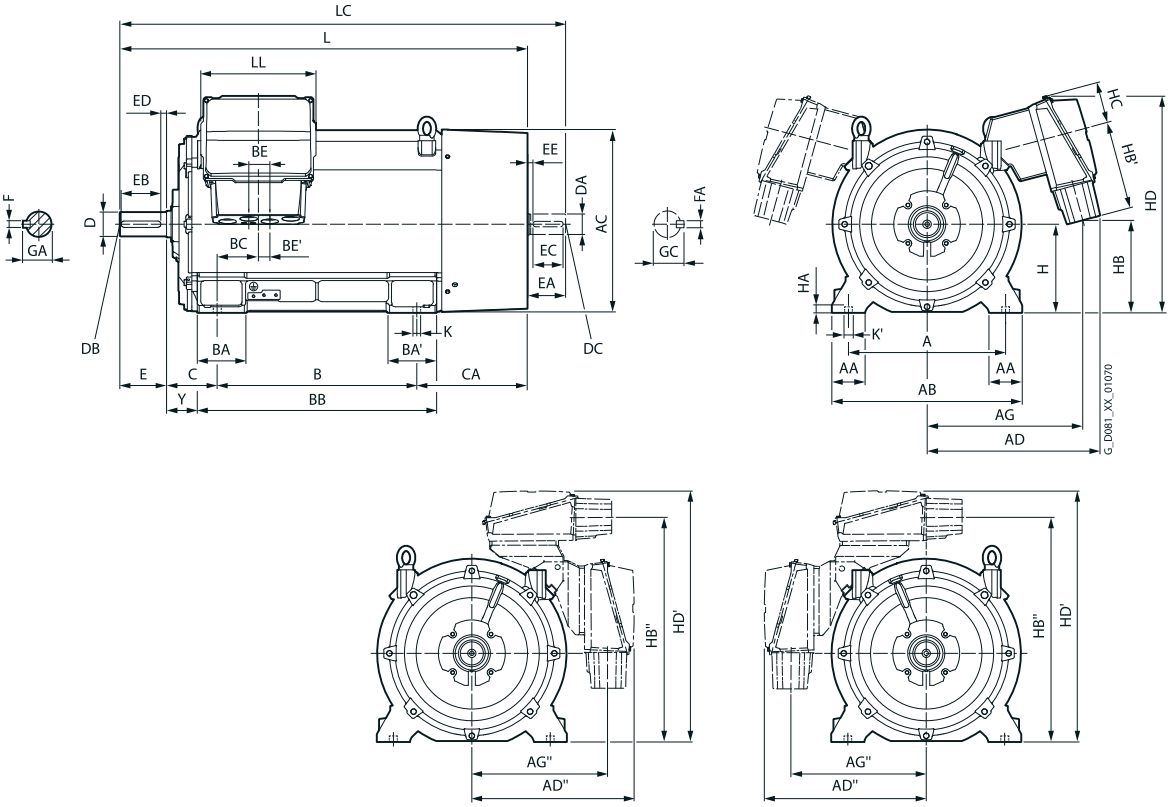

© Innomotics 2024

Innomotics XP 1MB1, 1MB5 explosion-protected motors

IE4, IE3 – 1MB5 with types of protection Ex tb, Ex tc, Ex ec – self-ventilated · Frame sizes 315 L to 450

Dimensional drawings

Types of construction IM B5 and IM V1

For flange dimensions, see page 1/59 (**Z** = the number of retaining holes)

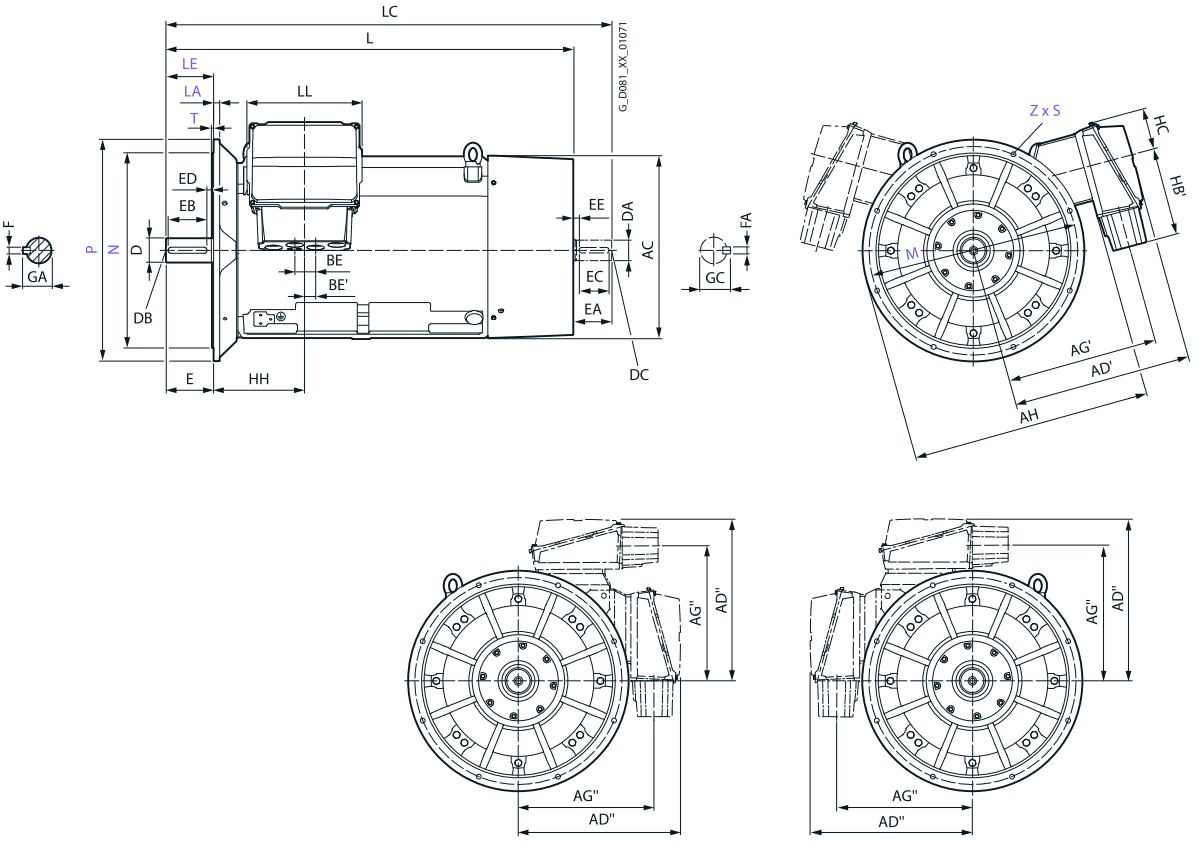

© Innomotics 2024

Innomotics XP 1MB1, 1MB5 explosion-protected motors

IE4, IE3 – 1MB5 with types of protection Ex tb, Ex tc, Ex ec – self-ventilated · Frame sizes 315 L to 450

Dimensional drawings

Type of construction IM B35

For flange dimensions, see page 1/59 (**Z** = the number of retaining holes)

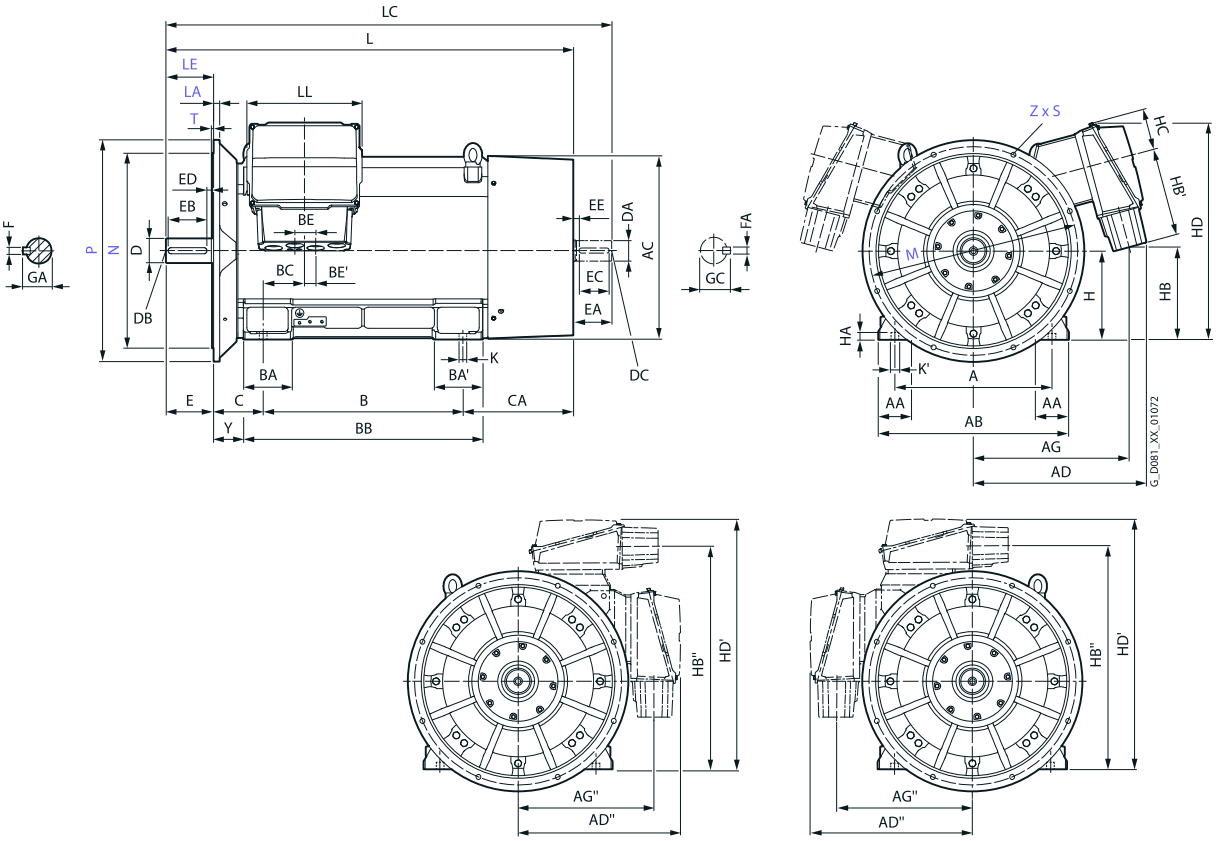

Dimensions see page 6/131.

© Innomotics 2024

Innomotics XP 1MB1, 1MB5 explosion-protected motors

IE4, IE3 – 1MB5 with types of protection Ex tb, Ex tc, Ex ec – self-ventilated · Frame sizes 315 L to 450

Dimensional drawings

For Momotor		Dimension designation acc. to **IEC**																										
Frame size	Motor-type 1MB5.2-1MB5.3-	No. of poles	A	AA	**AB**	AC	**AD**	AD'	AD''	AG	AG'	AG''	AH	B	B'	B''	BA	BA'	BB	BC	BE	BE'	C	CA	CA'	CA''	**H**	HA	Y
315 L	3AA6	2	508	120	**610**	641	**590**	565	540	553	459	–	890	457	508	-	176	227	648	139	120	60	216	469	418	–	**315**	50	146
	3AB6, 3AB7	4												508	560	630		298	770					528	476	406			
	3AA7	2																						498	446	376			
	3AC8	6																						618	566	496			
	3AC7, 3AD7	6, 8					**543**			491	473										135	67,5		528	476	406			
	3AD8	8																						618	566	496			
355 S/M/L	3BA3, 3BA4, 3BA5	2	610	150	**780**	718	**620**	657	644	550	542	–	940	630	710	800	198	315	998	116	240	120	254	553	473	383	**355**	49	130
	3BB3, 3BB4	4																											
	3BB5	4															194	311						648	568	478		35	
	3BC2, 3BC3	6																											
	3BC4	6																											
	3BD1, 3BD2	6																											
400	4AA	2	710	150	**860**	880	**785**	845	740	705	720	620	1110	900	–	–	220	220	1080	186	87,5	43,5	224	501	–	–	**400**	35	134
	4AB	4																											
	4AC	6																											
	4AD	8																											
450	4BA	2	800	180	**980**	970	**820**	895	775	740	770	655	1235	1000	–	–	260	260	1220	170	87,5	43,5	250	535	–	–	**450**	42	140
	4BB	4																											
	4BC	6																											
	4BD	8																											

© Innomotics 2024

Innomotics XP 1MB1, 1MB5 explosion-protected motors

IE4, IE3 – 1MB5 with types of protection Ex tb, Ex tc, Ex ec – self-ventilated · Frame sizes 315 L to 450

For motors		Dimension designation acc. to **IEC**													DE shaft extension							NDE shaft extension						
Frame size	Motor-type 1MB5.2-1MB5.3-	No. of poles	HB	HB'	HB"	HC	HD	HD'	HH	K	K'	**L**	LC [1]	LL	D	DB	E	EB	ED	F	GA	DA	DC	EA	EC	EE	FA	GC
315 L	3AA6	2	421	336	–	167	800	–	355	35	-	**1282**	1427	327	65	M20	140	125	10	18	69	60	M20	140	125	10	18	64
	3AB6, 3AB7	4										**1422**	1567		85		170	140	25	22	90	70					20	74,5
	3AA7	2										**1362**	1507		65		140	125	10	18	69	60					18	64
	3AC8	6										**1512**	1657		85		170	140	25	22	90	70					20	74,5
	3AC7, 3AD7	6, 8	491	225								**1422**	1567															
	3AD8	8										**1512**	1657															
355 S/M/L	3BA3, 3BA4, 3BA5	2	578	247	–	188	911	–	370	35	42	**1577**	1722	519	75	M20	140	125	10	20	79,5	60	M20	140	125	10	18	64
	3BB3, 3BB4	4										**1607**	1782		95	M24	170	140	25	25	100	80		170	140	25	22	85,5
	3BB5	4										**1702**	1877															
	3BC2, 3BC3	6										**1607**	1782															
	3BC4	6																										
	3BD1	8																										
	3BD2	8										**1702**	1877															
400	4AA	2	420	400	1020	190	980	1140	410	35	42	**1795**	1940	519	80	M20	170	140	25	22	85	70	M20	140	125	10	20	74,5
	4AB	4										**1835**	2010		110	M24	210	180		28	116	90	M24	170	140	25	25	95
	4AC	6																										
	4AD	8																										
450	4BA	2	505	400	1105	190	1065	1225	420	42	50	**1955**	2100	519	90	M24	170	140	25	25	95	75	M20	140	125	10	20	79,5
	4BB	4										**1995**	2210		120		210	180		32	127	100	M24	210	180	25	28	106
	4BC	6																										
	4BD	8																										

[1] In the low-noise version, a second shaft extension and/or mounted encoder is not possible.

© Innomotics 2024

Innomotics XP 1MB1, 1MB5 explosion-protected motors

IE3 – 1MB1 with types of protection Ex tb, Ex tc, Ex ec – self-ventilated · Frame sizes 71 M to 160 L

Dimensional drawings

Type of construction IM B3

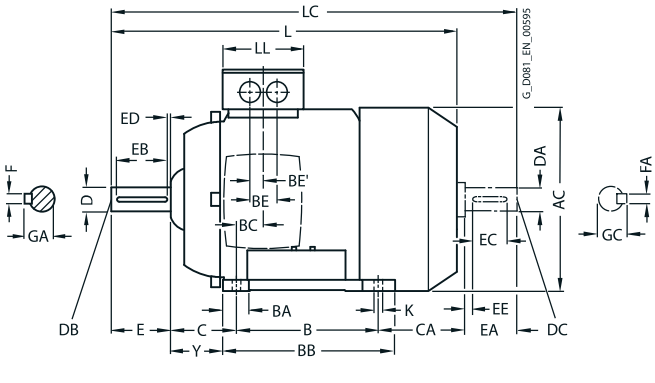

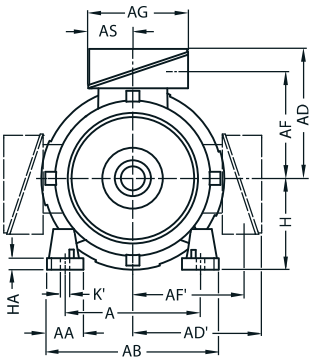

Only cast housing feet for frame sizes 132 S/M and 160 L/M each have 2 holes at NDE.

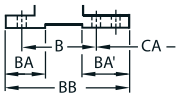

Types of construction IM B5 and IM V1

For flange dimensions, see page 1/59 (**Z** = the number of retaining holes)

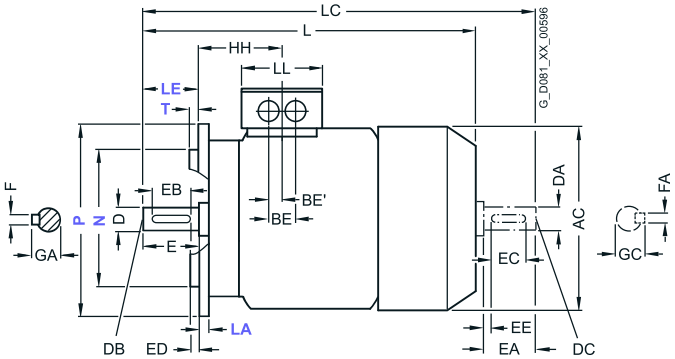

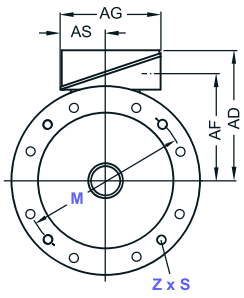

For motor			Dimension designation acc. to **IEC**																				
Frame size	Motor type 1MB15.3-, 1MB16.3-	No. of poles	A	AA	**AB**	AC	**AD**	AD'	AF	AF'	AG	AS	B	BA	BA'	BB	BC	BE	BE'	C	CA	**H**	HA	Y
71 M	0CA2, 0CB2, 0CC2	2, 4, 6	112	30.5	**132**	145	**149**	149	112	112	126	62	90	32	32	106	21	36	18	45	83	**71**	7	37
	0CA3, 0CB3, 0CC3																28							
80 M	0DA2, 0DB2, 0DC2	2, 4, 6	125	30.5	**150**	162	**159**	159	122	122	126	62	100	32	32	118	22.5	36	18	50	112.5	**80**	8	41
	0DA3, 0DB3, 0DC3																							
90 S	All	2, 4, 6	140	30.5	**165**	180	**164**	164	127	127	126	62	100	33	54	143	24.5	36	18	56	149	**90**	10	47
90 L	All	2, 4, 6	140	30.5	**165**	180	**164**	164	127	127	126	62	125	33	54	143	24.5	36	18	56	164	**90**	10	47
100 L	All	2, 4, 6	160	42	**196**	198	**193**	193	147	147	163	80.5	140	40	40	176	37.5	48	24	63	176	**100**	12	45
112 M	All	2, 4, 6	190	46	**226**	222	**195**	195	150	150	163	80.5	140	40	40	176	30	48	24	70	155	**112**	12	52
132 S	1CA0, 1CC0	2, 6	216	53	**256**	262	**214.5**	214.5	169	169	163	80.5	140	44	81[1]	218[2]	26.5	48	24	89	128.5	**132**	15	69
	1CA1, 1CB0	2, 4													–						178.5			
132 M	1CC2	6	216	53	**256**	262	**214.5**	214.5	169	169	163	80.5	178	44	81[1]	218	26.5	48	24	89	128.5	**132**	15	69
	1CB2, 1CC3	4, 6													–						178.5			
160 M	All	2, 4, 6	254	60	**300**	314	**261**	261	213	213	190	92	210	73	117[3]	300[4]	37	60	30	108	148	**160**	18	85
160 L	All	2, 4, 6	254	60	**300**	314	**261**	261	213	213	190	92	254	73	117[3]	300	37	60	30	108	208	**160**	18	85

[1] With screwed-on feet, dimension BA' is 43 mm.
[2] With screwed-on feet, dimension BB is 180 mm.
[3] With screwed-on feet, dimension BA' is 51 mm.
[4] With screwed-on feet, dimension BB is 256 mm.

© Innomotics 2024

Innomotics XP 1MB1, 1MB5 explosion-protected motors

IE3 – 1MB1 with types of protection Ex tb, Ex tc, Ex ec – self-ventilated · Frame sizes 71 M to 160 L

Dimensional drawings

Type of construction IM B35

For flange dimensions, see page 1/59 (**Z** = the number of retaining holes)

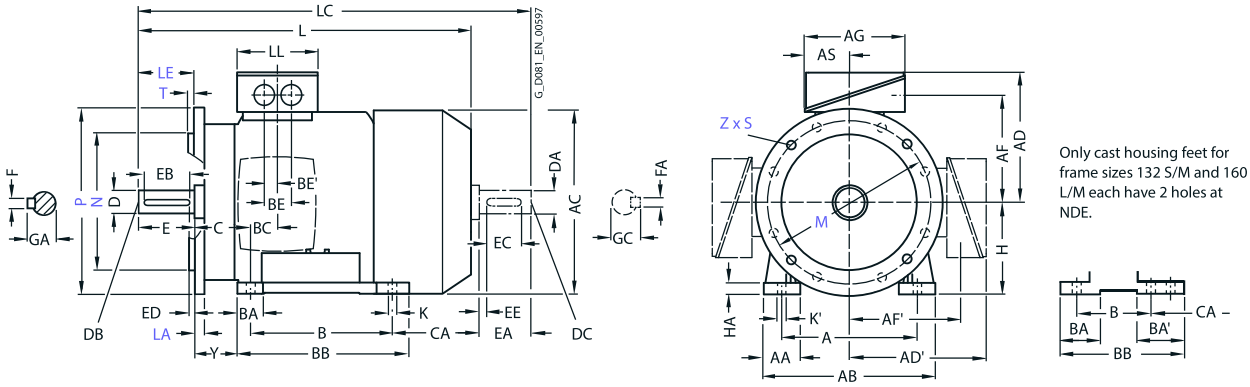

Type of construction IM B14

For flange dimensions, see page 1/59 (**Z** = the number of retaining holes)

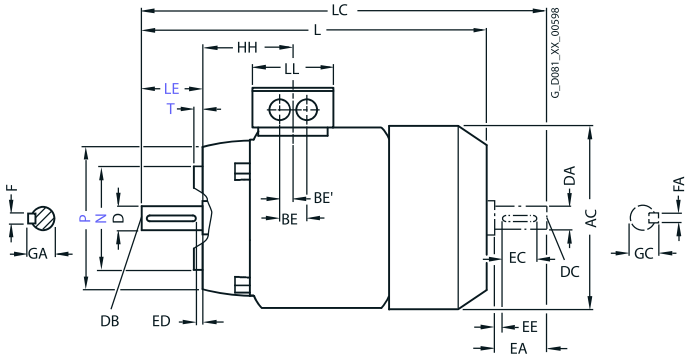

For motor			Dimension designation acc. to **IEC**						DE shaft extension							NDE shaft extension						
Frame size	Motor type 1MB15.3-, 1MB16.3-	No. of poles	HH	K	K'	**L**	LC	LL	D	DB	E	EB	ED	F	GA	DA	DC	EA	EC	EE	FA	GC
71 M	0CA2, 0CB2, 0CC2	2, 4, 6	63	7.5	7.5	**240**	278	102	14	M5	30	22	4	5	16	14	M5	30	22	4	5	16
	0CA3, 0CB3, 0CC3		70			**280**	318															
80 M	0DA2, 0DB2, 0DC2	2, 4, 6	72.5	10	13.5	**292**	342.5	102	19	M6	40	32	4	6	21.5	19	M6	40	32	4	6	21.5
	0DA3, 0DB3 0DC3					**327**	377.5															
90 S	All	2, 4, 6	80.5	10	10	**347**	405	102	24	M8	50	40	5	8	27	24	M8	50	40	5	8	27
90 L	All	2, 4, 6	80.5	10	10	**387**	445	102	24	M8	50	40	5	8	27	24	M8	50	40	5	8	27
100 L	All	2, 4, 6	100.5	12	16	**418**	489	134	28	M10	60	50	5	8	31	24	M8	50	40	5	8	27
112 M	All	2, 4, 6	100.5	12	16	**402**	475	134	28	M10	60	50	5	8	31	24	M8	50	40	5	8	27
132 S	1CA0, 1CC0	2, 6	115.5	12	16	**449.5**	536	134	38	M12	80	70	5	10	41	28	M10	60	50	5	8	31
	1CA1, 1CB0	2, 4				**499.5**	586															
132 M	1CC2	6	115.5	12	16	**449.5**	536	134	38	M12	80	70	5	10	41	28	M10	60	50	5	8	31
	1CB2, 1CC3	4, 6				**499.5**	586															
160 M	All	2, 4, 6	145	15	19	**586**	730	165	42	M16	110	90	10	12	45	42	M16	110	90	10	12	45
160 L	All	2, 4, 6	145	15	19	**646**	790	165	42	M16	110	90	10	12	45	42	M16	110	90	10	12	45

© Innomotics 2024

Innomotics XP 1MB1, 1MB5 explosion-protected motors

IE3 – 1MB1 with types of protection Ex tb, Ex tc, Ex ec – self-ventilated · Frame sizes 180 M to 315 L

Dimensional drawings

Type of construction IM B3

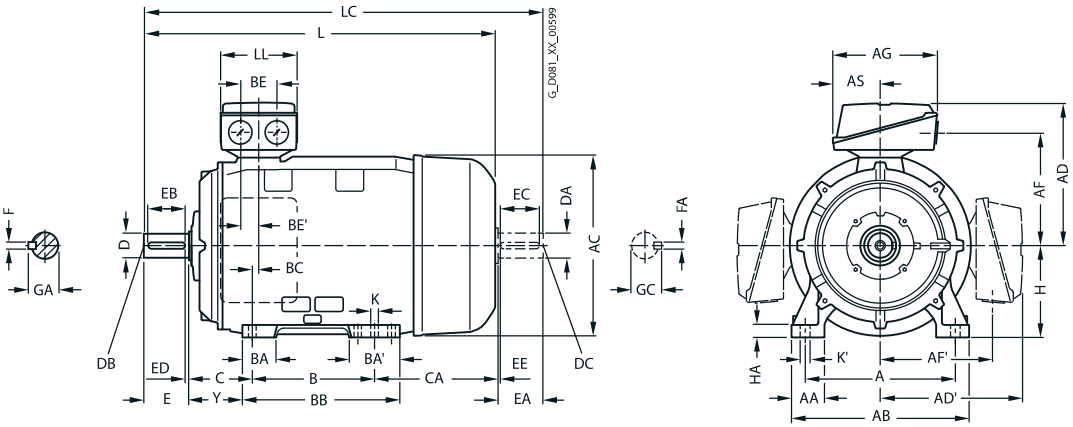

Types of construction IM B5 and IM V1

For flange dimensions, see page 1/59 (**Z** = the number of retaining holes)

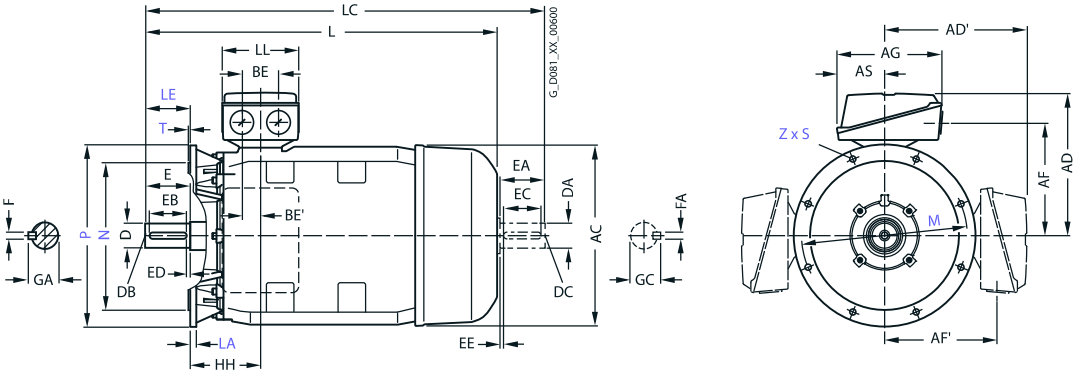

For motor			Dimension designation acc. to **IEC**																			
Frame size	Motor type 1MB15.3-, 1MB16.3-	No. of poles	A	AA	**AB**	AC	**AD**	AD'	AF	AF'	AG	AH	AS	B	BA	BA'	BB	BC	BE	BE'	C	CA
180 M	1EA2	2	279	65	**339**	356	**286**	286	234	234	190	468	92	241	85	120	328	34	60	30	121	202
	1EB2	4																				
180 L	1EB4	4	279	65	**339**	356	**286**	286	234	234	190	468	92	279	85	120	328	34	60	30	121	202
	1EC4	6																				
200 L	2AA4, 2AC4	2, 6	318	60	**378**	396	**315**	315	259	259	266	533	112	305	104	104	355	31	85	42.5	133	177
	2AA5, 2AB5, 2AC5	2, 4, 6																				
225 S	2BB0	4	356	80	**436**	449	**338**	338	282	282	266	556	112	286	92	117	361	15	85	42.5	149	218
225 M	2BA2	2	356	80	**436**	449	**338**	338	282	282	266	556	112	311	92	117	361	15	85	42.5	149	253
	2BB2, 2BC2	4, 6																				
250 M	2CA2	2	406	100	**490**	497	**410**	410	322	322	319	620	145	349	102	102	409	24	110	55	168	230
	2CB2, 2CC2	4, 6																				
280 S	2DA0	2	457	100	**540**	551	**433**	433	345	345	319	672	145	368	101	152	479	20	110	55	190	267
	2DB0, 2DC0	4, 6																				
280 M	2DA2	2	457	100	**540**	551	**433**	433	345	345	319	672	145	419	101	152	479	20	110	55	190	326
	2DB2	4																				
	2DC2	6																				216
315 S	3AA0	2	508	120	**610**	616	**515**	515	404	404	374	780	164	406	113	170	527	22	110	55	216	295
	3AB0, 3AC0	4, 6																				
315 M	3AA2	2	508	120	**610**	616	**515**	515	404	404	374	780	164	457	113	170	578	22	110	55	216	409
	3AB2, 3AC2	4, 6																				
315 L	3AA4	2	508	120	**610**	616	**515**	515	404	404	374	780	164	508	113	170	578	22	110	55	216	358
	3AB4, 3AC4	4, 6																				
	3AA5	2													176	227	648					513
	3AB5, 3AC5, 3AC6	4, 6																				

© Innomotics 2024

Innomotics XP 1MB1, 1MB5 explosion-protected motors

IE3 – 1MB1 with types of protection Ex tb, Ex tc, Ex ec – self-ventilated · Frame sizes 180 M to 315 L

Dimensional drawings

Type of construction IM B35

For flange dimensions, see page 1/59 (**Z** = the number of retaining holes)

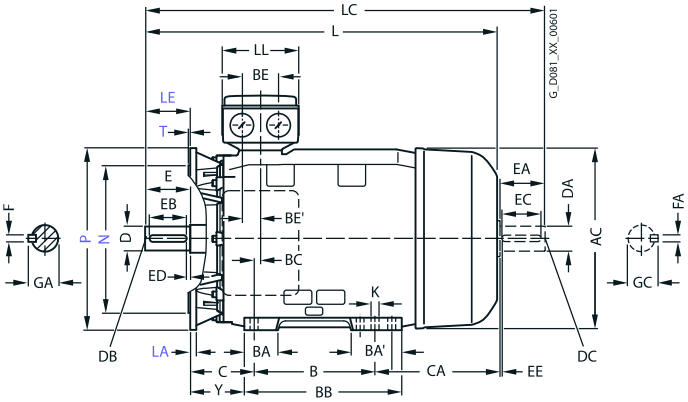

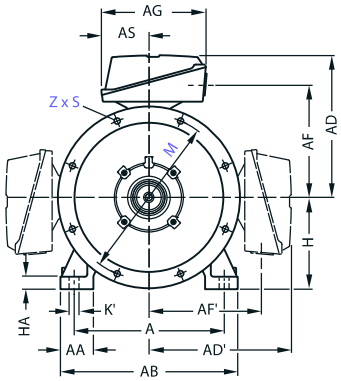

6

For motor			Dimension designation acc. to **IEC**										DE shaft extension							NDE shaft extension						
Frame size	Motor type 1MB15.3-, 1MB16.3-	No. of poles	**H**	HA	Y	HH	K	K'	**L**	L' [1]	LC[2]	LL	D	DB	E	EB	ED	F	GA	DA	DC	EA	EC	EE	FA	GC
180 M	1EA2	2	**180**	20	95	155	15	19	**698**	698	814	165	48	M16	110	100	5	14	52	48	M16	110	100	5	14	51.5
	1EB2	4							**668**	668	784															
180 L	1EB4	4	**180**	20	95	155	15	19	**698**	698	814	165	48	M16	110	100	5	14	52	48	M16	110	100	5	14	51.5
	1EC4	6							**668**	668	784															
200 L	2AA4, 2AC4	2, 6	**200**	25	108	164	19	25	**721**	755	835	197	55	M20	110	100	5	16	59	55	M20	110	100	5	16	59
	2AA5, 2AB5, 2AC5	2, 4, 6							**746**	780	860															
225 S	2BB0	4	**225**	34	124	164	19	25	**788**	–	903	197	60	M20	140	125	10	18	64	55	M20	110	100	5	16	59
225 M	2BA2	2	**225**	34	124	164	19	25	**818**	852	933	197	55	M20	110	100	5	16	59	48	M16	110	100	5	14	51.5
	2BB2, 2BC2	4, 6							**848**	–	963		60		140	125	10	18	64	55	M20				16	59
250 M	2CA2	2	**250**	40	138	192	24	30	**887**	924	1002	233	60	M20	140	125	10	18	64	55	M20	110	100	5	16	59
	2CB2, 2CC2	4, 6								–	1032		65						69	60		140	125	10	18	64
280 S	2DA0	2	**280**	40	160	210	24	30	**960**	998	1105	233	65	M20	140	125	10	18	69	60	M20	140	125	10	18	64
	2DB0, 2DC0	4, 6								–			75					20	79.5	65						69
280 M	2DA2	2	**280**	40	160	210	24	30	**1070**	1108	1105	233	65	M20	140	125	10	18	69	60	M20	140	125	10	18	64
	2DB2	4								–	1215		75					20	79.5	65						69
	2DC2	6							**960**																	
315 S	3AA0	2	**315**	50	181	238	28	35	**1052**	1122	1197	299	65	M20	140	125	10	18	69	60	M20	140	125	10	18	64
	3AB0, 3AC0	4, 6							**1082**	–	1227		80		170	140	25	22	85	70					20	74.5
315 M	3AA2	2	**315**	50	181	238	28	35	**1217**	1287	1362	299	65	M20	140	125	10	18	69	60	M20	140	125	10	18	64
	3AB2, 3AC2	4, 6							**1247**	–	1392		80		170	140	25	22	85	70					20	74.5
315 L	3AA4	2	**315**	50	181	238	28	35	**1217**	1287	1362	299	65	M20	140	125	10	18	69	60	M20	140	125	10	18	64
	3AB4, 3AC4	4, 6							**1247**	–	1392		80		170	140	25	22	85	70					20	74.5
	3AA5	2			146				**1372**	1442	1517		65		140	125	10	18	69	60					18	64
	3AB5, 3AC5, 3AC6	4, 6							**1402**	–	1547		80		170	140	25	22	85	70					20	74.5

© Innomotics 2024

Innomotics XP 1MB1, 1MB5 explosion-protected motors

IE3, IE1 – 1MB1 with type of protection Ex eb – self-ventilated · Frame sizes 71 M to 160 L

Dimensional drawings

Type of construction IM B3

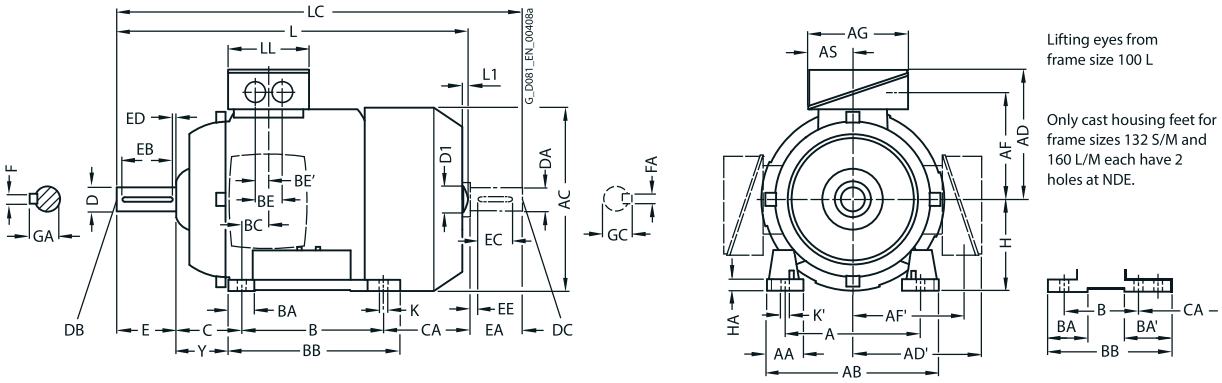

Types of construction IM B5 and IM V1

For flange dimensions, see page 1/59 (**Z** = the number of retaining holes)

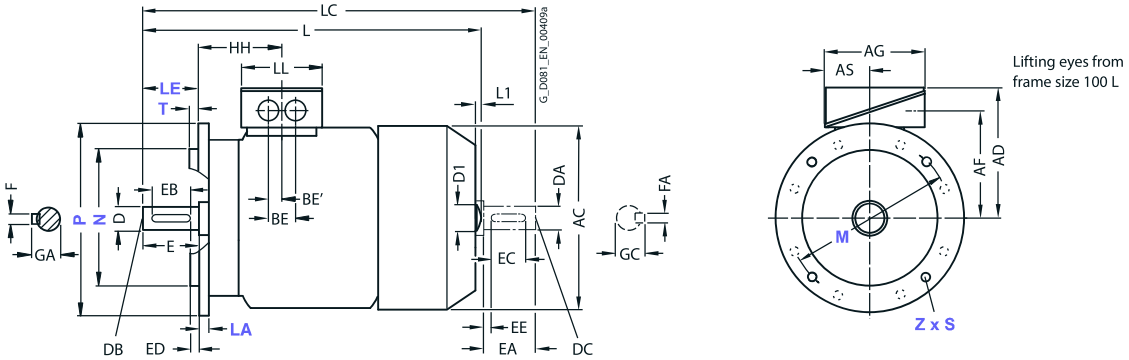

For motor			Dimension designation acc. to **IEC**																					
Frame size	Motor type	No. of poles	A	AA	**AB**	AC	**AD**	AD´	AF	AF´	AG	AS	B	BA	BA´	BB	BC	BE	BE´	C	CA	**H**	HA	Y
	1MB1543- 1MB1643-																							
71 M	0C.2 0C.3	2, 4, 6	112	30.5	**132**	145	**173**	173	129	129	163	80.5	90	32	32	106	21	48	24	45	83	**71**	7	37
80 M	0D.2 0D.3	2, 4, 6	125	30.5	**150**	162	**183**	183	139	139	163	80.5	100	32	32	118	22.5	48	24	50	112.5	**80**	8	41
90 S	0E.0	2, 4, 6	140	30.5	**165**	180	**188**	188	144	144	163	80.5	100	33	54	143	24.5	48	24	56	159	**90**	11	47
90 L	0E.4	2, 4, 6	140	30.5	**165**	180	**188**	188	144	144	163	80.5	125	33	54	143	24.5	48	24	56	134	**90**	11	47
100 L	All	2, 4, 6	160	42	**196**	217	**193**	193	147	147	163	80.5	140	48	48	176	37.5	48	24	63	141	**100**	12	45
112 M	All	2, 4, 6	190	46	**226**	239	**195**	195	150	150	163	80.5	140	48	48	176	30	48	24	70	130	**112**	12	52
132 S	1CA0, 1CC0 1CA1, 1CB0	2, 6 2, 4	216	53	**256**	281	**214.5**	214.5	169	169	163	80.5	140	52	89[1]	218[2]	26.5	48	24	89	128.5 178.5	**132**	15	69
132 M	1CC2 1CB2, 1CC3	6 4, 6	216	53	**256**	281	**214.5**	214.5	169	169	163	80.5	178	52	89[1]	218	26.5	48	24	89	128.5 178.5	**132**	15	69
160 M	All	2, 4, 6	254	60	**300**	333.5	**261**	261	213	213	190	92	210	73	117[3]	300[4]	37	60	30	108	192	**160**	18	85
160 L	All	2, 4, 6	254	60	**300**	333.5	**261**	261	213	213	190	92	254	73	117[3]	300	37	60	30	108	208	**160**	18	85

[1] With screwed-on feet, dimension BA' is 43 mm.
[2] With screwed-on feet, dimension BB is 180 mm.
[3] With screwed-on feet, dimension BA' is 51 mm.
[4] With screwed-on feet, dimension BB is 256 mm.

© Innomotics 2024

Innomotics XP 1MB1, 1MB5 explosion-protected motors

IE3, IE1 – 1MB1 with type of protection Ex eb – self-ventilated · Frame sizes 71 M to 160 L

Dimensional drawings

Type of construction IM B35

For flange dimensions, see page 1/59 (**Z** = the number of retaining holes)

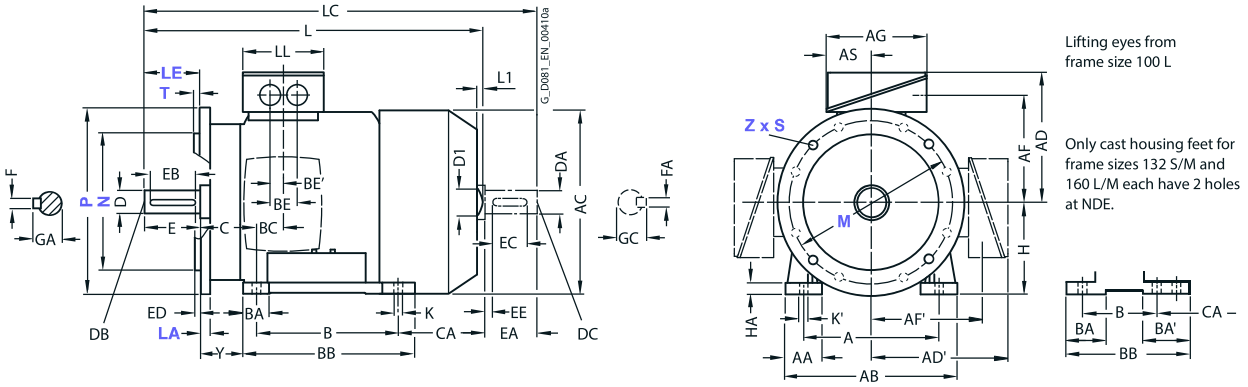

Type of construction IM B14

For flange dimensions, see page 1/59 (**Z** = the number of retaining holes)

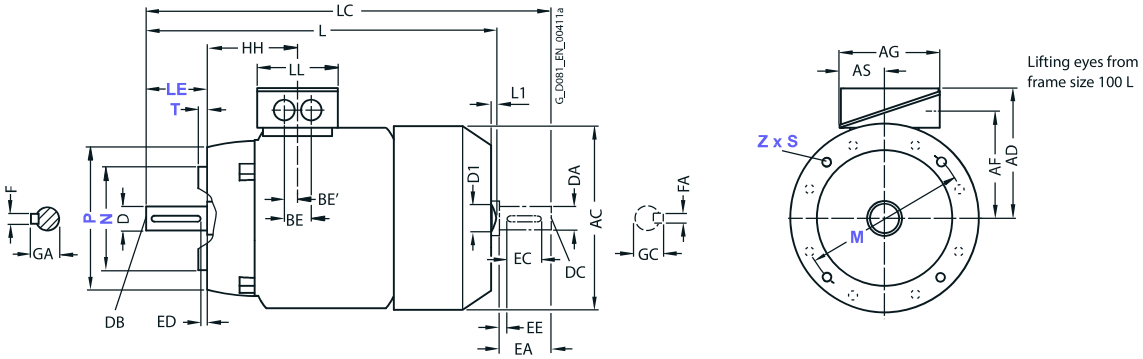

For motor			Dimension designation acc. to **IEC**								DE shaft extension							NDE shaft extension						
Frame size	Motor type 1MB1543- 1MB1643-	No. of poles	HH	K	K´	**L**[1]	L1	D1	LC	LL	D	DB	E	EB	ED	F	GA	DA	DC	EA	EC	EE	FA	GC
71 M	0C.2 0C.3	2, 4, 6	64.5	7.5	7.5	**240** **280**	–	–	278	134	14	M5	30	22	4	5	16	14	M5	30	22	4	5	16
80 M	0D.2 0D.3	2, 4, 6	71.5	10	10	**292** **327**	–	–	318	134	19	M6	40	32	4	6	21.5	19	M6	40	32	4	6	21.5
90 S	0E.0	2, 4, 6	79.5	10	10	**347**	–	–	343	134	24	M8	50	40	5	8	27	19	M6	50	40	5	8	21.5
90 L	0E.4	2, 4, 6	79.5	10	10	**387**	–	–	378	134	24	M8	50	40	5	8	27	19	M6	50	40	5	8	21.5
100 L	All	2, 4, 6	100.5	12	16	**425.5**	–	32	405	134	28	M10	M10	50	5	8	31	24	M8	M10	50	5	8	27
112 M	All	2, 4, 6	100.5	12	16	**408.5**	–	32	445	134	28	M10	60	50	5	8	31	24	M8	60	50	5	8	27
132 S	1CA0, 1CC0 1CA1, 1CB0	2, 6 2, 4	115.5	12	16	**458**	–	39	489	134	38	M12	80	70	5	10	41	28	M10	80	70	5	10	31
132 M	1CC2 1CB2, 1CC3	6 4, 6	115.5	12	16	**508**	–	39	342.5	134	38	M12	80	70	5	10	41	28	M10	80	70	5	10	31
160 M	All	2, 4, 6	145	14.5	18	**596**	–	45	475	165	42	M16	110	90	10	12	45	42	M16	110	90	10	12	45
160 L	All	2, 4, 6	145	14.5	18	**656**	–	45	535.5	165	42	M16	110	90	10	12	45	42	M16	110	90	10	12	45

1) For 1MB1643 motors less dimension L1.
2) Only for 1MB1543 motors.
3) Bei 1MB1042-0B.3 mit den Bauformkennbuchstaben (14. Stelle der Artikelnummer) F, H (IM B5, IM V3) beträgt das Maß L 228,5 mm. Das Maß LC beträgt 258 mm.

© Innomotics 2024

Innomotics XP 1MB1, 1MB5 explosion-protected motors

IE3 – 1MB1 with type of protection Ex eb – self-ventilated · Frame sizes 180 M to 280 M

Dimensional drawings

Type of construction IM B3

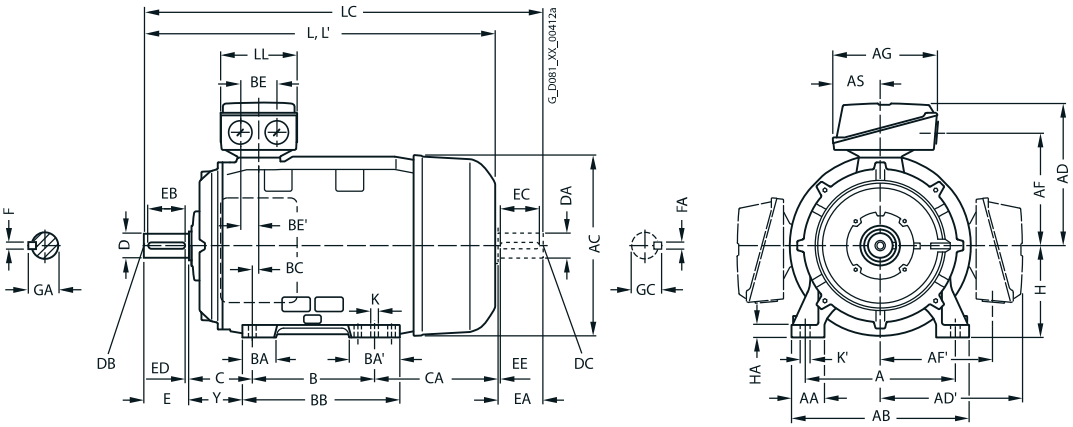

Types of construction IM B5 and IM V1

For flange dimensions, see page 1/59 (**Z** = the number of retaining holes)

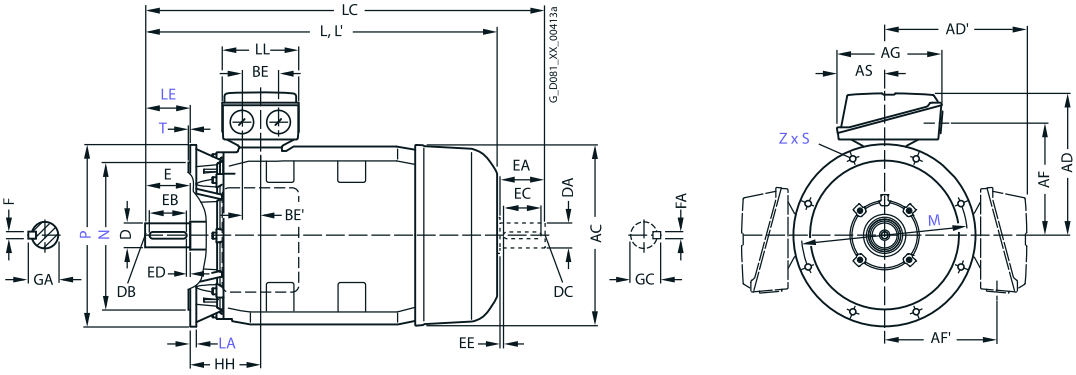

For motor			Dimension designation acc. to **IEC**																		
Frame size	Motor type 1MB1543- 1MB1643-	No. of poles	A	AA	**AB**	AC	**AD**	AD´	AF	AF´	AG	AS	B	BA	BA´	BB	BC	BE	BE´	C	CA
180 M/ 180 L	1EA2, 1EB4 1EB2, 1EC4	2, 4 4, 6	279	65	**339**	356	**286**	286	234	234	190	92	241	85	120	328	34	60	30	121	202
200 L	2AA4, 2AC4 2AA5, 2AB5, 2AC5	2, 6 2, 4, 6	318	70	**378**	396	**315**	315	259	259	266	112	305	104	104	355	31	85	42,5	133	177
225 S	2BB0	4	356	80	**436**	449	**338**	338	282	282	266	112	286	92	117	361	15	85	42,5	149	218
225 M	2BA2 2BB2, 2BC2	2 4, 6											311					85	42,5	149	253
250 M	2CA2 2CB2, 2CC2	2 4, 6	406	100	**490**	497	**410**	410	322	322	319	145	349	102	102	409	24	110	55	168	230
280 S	2DA0 2DB0, 2DC0	2 4, 6	457	100	**540**	551	**433**	433	345	345	319	145	368	101	152	479	20	110	55	190	267
280 M	2DA2 2DB2 2DC2	2 4 6											419								

© Innomotics 2024

Innomotics XP 1MB1, 1MB5 explosion-protected motors

IE3 – 1MB1 with type of protection Ex eb – self-ventilated · Frame sizes 180 M to 280 M

Dimensional drawings

Type of construction IM B35

For flange dimensions, see page 1/59 (**Z** = the number of retaining holes)

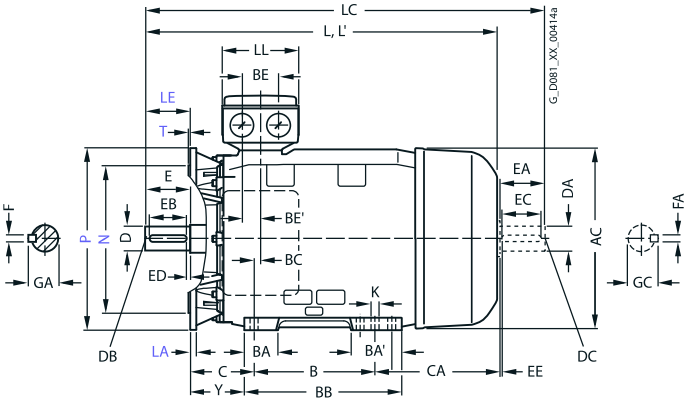

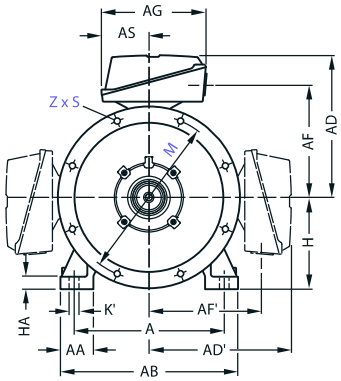

For motor			Dimension designation acc. to **IEC**									DE shaft extension							NDE shaft extension						
Frame size	Motor type 1MB1543- 1MB1643-	No. of poles	**H**	HA	Y	HH	K	K´	**L**	LC[1]	LL	D	DB	E	EB	ED	F	GA	DA	DC	EA	EC	EE	FA	GC
180 M/ 180 L	1EA2, 1EB4	2, 4	**180**	20	95	155	15	19	**698**	814	164	48	M16	110	100	5	14	51.5	48	M16	110	100	5	14	51.5
	1EB2, 1EC4								**668**	784															
200 L	2AA4, 2AC4	2, 6	**200**	25	108	164	19	25	**721**	835	197	55	M20	110	100	5	16	59	55	M20	110	100	5	16	59
	2AA5, 2AB5, 2AC5	2, 4, 6							**746**	860															
225 S	2BB0	4	**225**	34	124	164	19	25	**788**	963	197	60	M20	140	125	10	18	64	55	M20	175	100	70	16	59
225 M	2BA2	2							**818**	993		55		110	100	5	16	59	48	M16				14	51.5
	2BB2, 2BC2	4, 6							**928**	1103		60		140	125	10	18	64	55	M20				16	59
250 M	2CA2	2	**250**	40	138	192	24	30	**887**	1062	233	60	M20	140	125	10	18	64	55	M20	175	100	70	16	59
	2CB2, 2CC2	4, 6							**957**	1162		65						69	60		205	125	75	18	64
280 S	2DA0	2	**280**	40	160	210	24	30	**960**	1170	233	65	M20	140	125	10	18	69	60	M20	210	125	80	18	64
	2DB0, 2DC0	4, 6										75					20	79.5	65						69
280 M	2DA2	6							**1070**	1280		65					18	69	60						64
	2DB2	2										75					20	79.5	65						69
	2DC2	4							**960**	1170															

[1] In the low-noise version, a second shaft extension and/or mounted encoder is not possible.

© Innomotics 2024

Innomotics XP 1MB1, 1MB5 explosion-protected motors

IE3 – 1MB5 with type of protection Ex eb – self-ventilated · Frame sizes 315 S to 315 L

Dimensional drawings

Type of construction IM B3

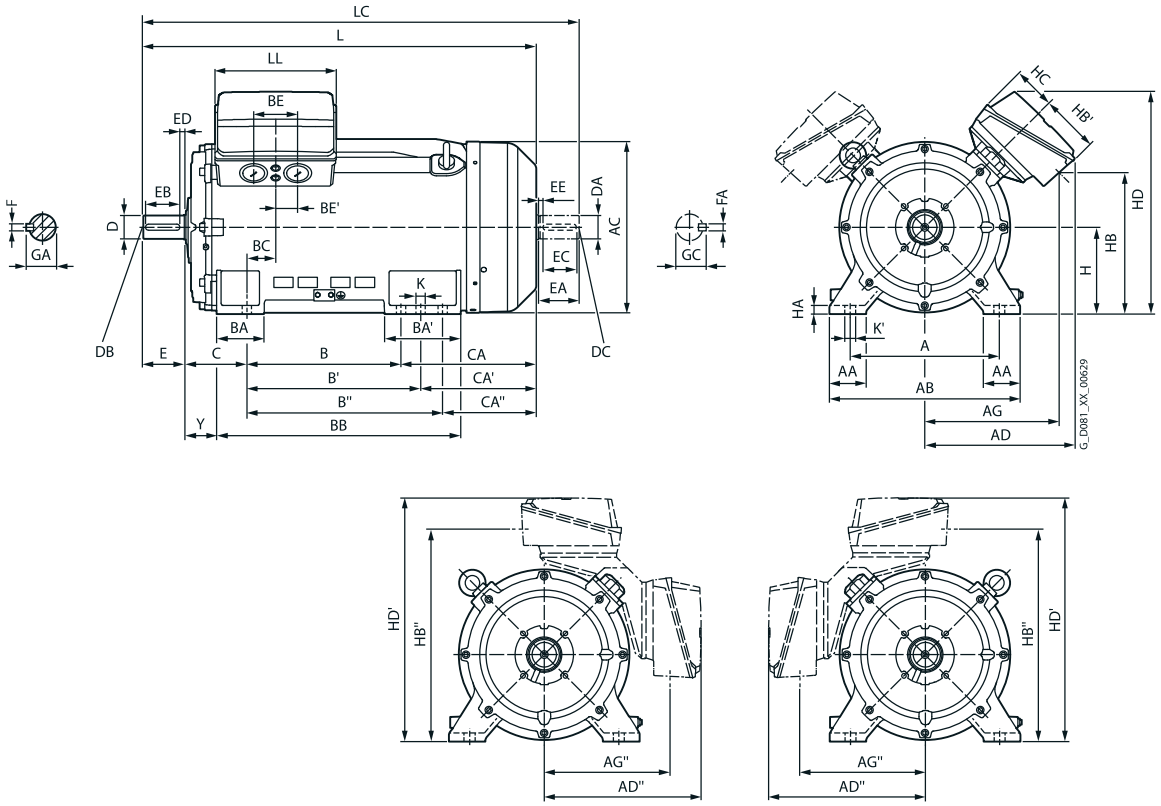

© Innomotics 2024

Innomotics XP 1MB1, 1MB5 explosion-protected motors

IE3 – 1MB5 with type of protection Ex eb – self-ventilated · Frame sizes 315 S to 315 L

Dimensional drawings

Types of construction IM B5 and IM V1

For flange dimensions, see page 1/59 (**Z** = the number of retaining holes)

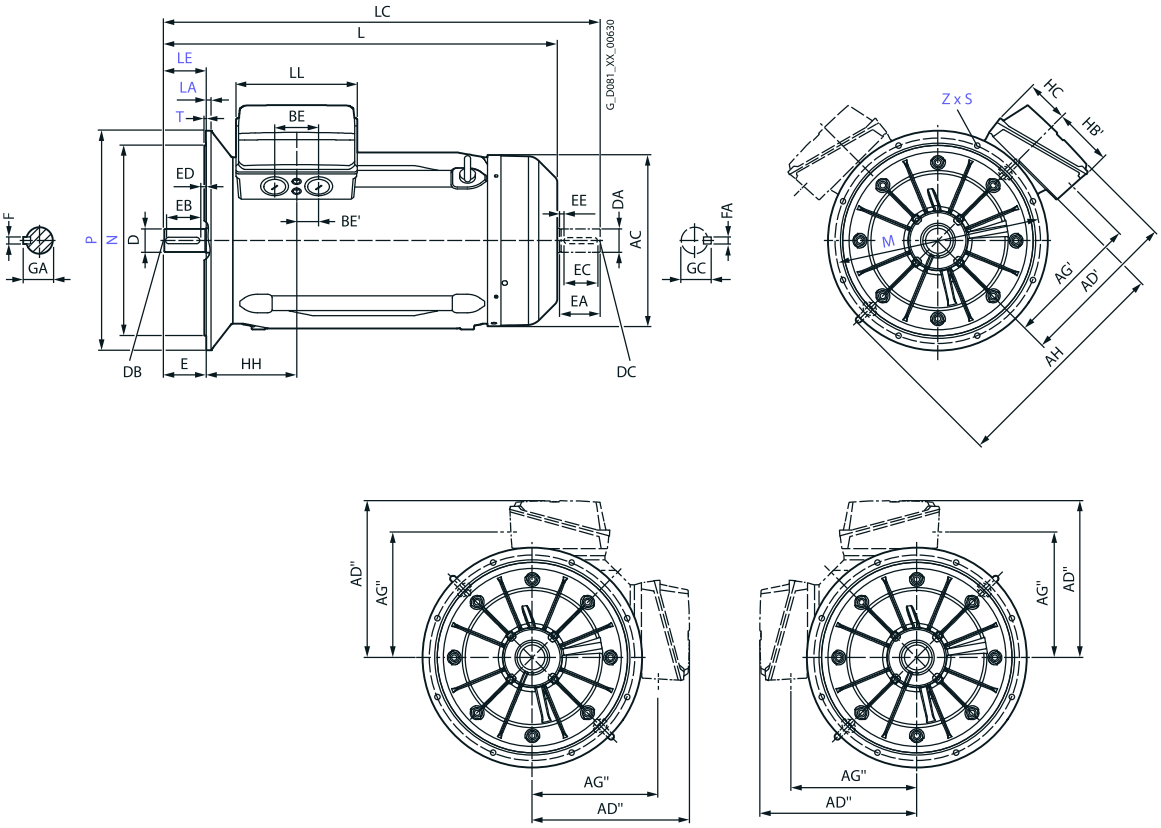

© Innomotics 2024

Innomotics XP 1MB1, 1MB5 explosion-protected motors

IE3 – 1MB5 with type of protection Ex eb – self-ventilated · Frame sizes 315 S to 315 L

Dimensional drawings

Type of construction IM B35

For flange dimensions, see page 1/59 (**Z** = the number of retaining holes)

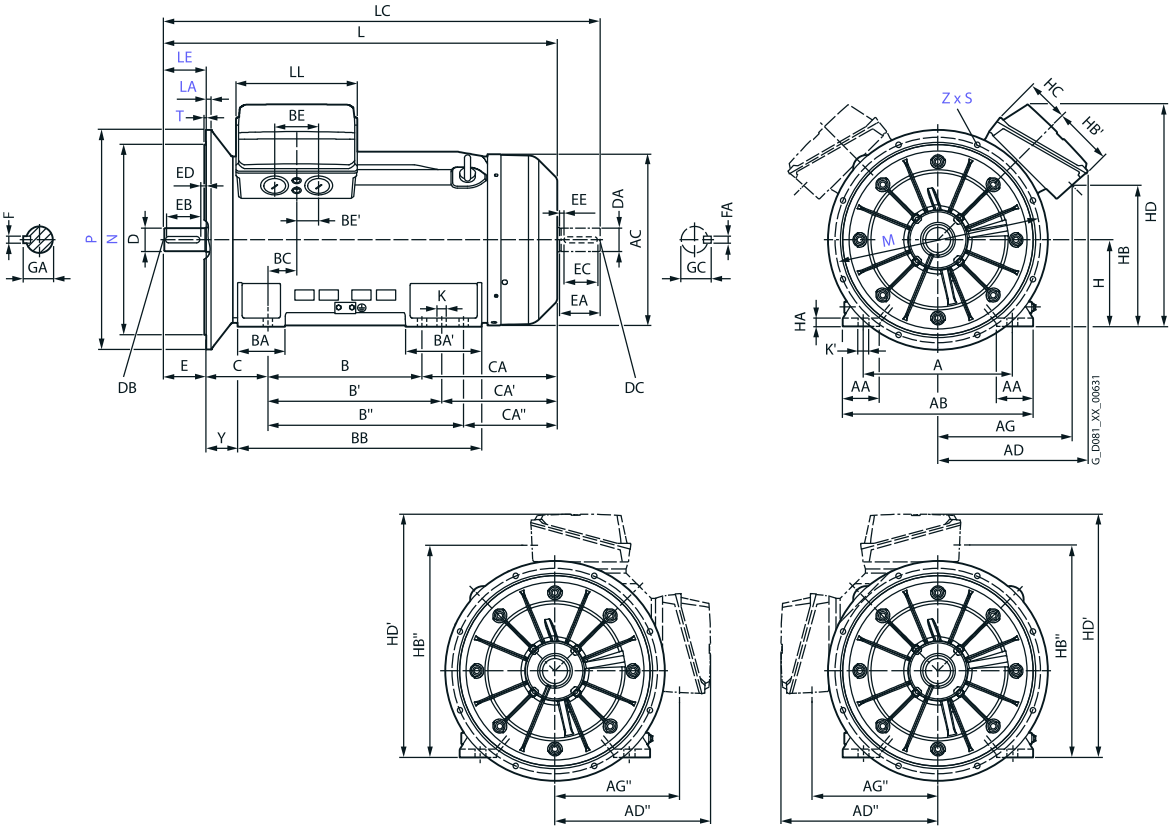

For motor			Dimension designation acc. to **IEC**																							
Frame size	Motor type 1MB5543 1MB5643	No. of poles	A	AA	**AB**	AC	**AD**	AD´	AD´´	AG	AG´	AG´´	AH	B	B´	BA	BA´	BB	BC	BE	BE´	C	CA	CA´	**H**	HA	HB
315 S/M	3AA0, 3AA2 3AB0, 3AB2, 3AC0, 3AC2	2 4, 6	508	120	**610**	641	**543**	565	540	491	480	481	660	406	457	176 177	227 226	570	139	135	67.5	216	370	319	**315**	50	491
315 L	3AA4, 3AA5, 3AB4, 3AB5, 3AC4, 3AC5, 3AC6	2 4, 6	508	120	**610**	641	**543**	565	540	491	480	481	660	457	508	176	227	648	139	135	67.5	216	469	418	**315**	50	491

For motor			Dimension designation acc. to **IEC**											DE shaft extension							NDE shaft extension						
Frame size	Motor type 1MB5543 1MB5643	No. of poles	HB´	HB´´	HC	HD	HD´	HH	Y	K	K´	**L**	LC[1]	LL	D	DB	E	EB	ED	F	GA	DA	DC	EA	EC	EE	FA	GC
315 S/M	3AA0, 3AA2 3AB0, 3AB2, 3AC0, 3AC2	2 4, 6	225	796	167	800	880	355	146	28	35	**1132** **1162**	1277 1307	327	65 80	M20 M20	140 170	125 140	10 25	18 22	69 85	60 70	M20	140	125	80	18 20	64 74
315 L	3AA0, 3AA2 3AB4, 3AB5, 3AC4, 3AC5, 3AC6	2 4, 6	225	796	167	800	880	355	146	28	35	**1282** **1312**	1427 1457	327	65 80	M20	140	125	10	18	69	60	M20	140	125	80	18	64

[1] In the low-noise version, a second shaft extension and/or mounted encoder is not possible.

© Innomotics 2024

Innomotics XP 1MB1, 1MB5 explosion-protected motors

IE3 – 1MB1 with types of protection Ex db, Ex db eb – self-ventilated · Frame sizes 71 M to 160 L

Dimensional drawings

Type of construction IM B3

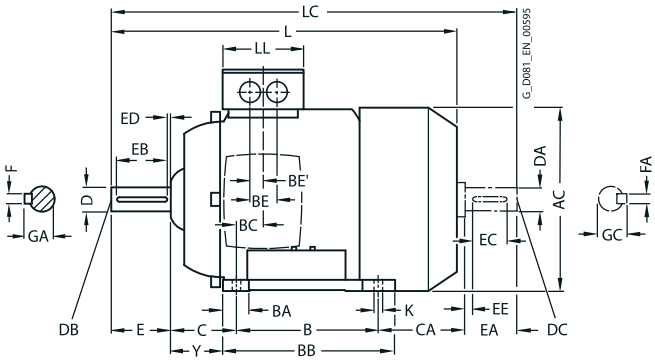

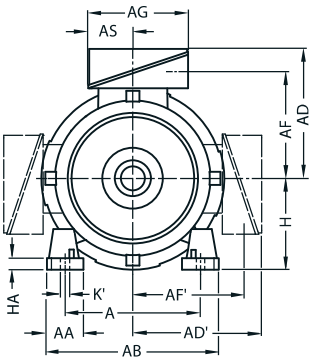

Only cast housing feet for frame sizes 132 S/M and 160 L/M each have 2 holes at NDE.

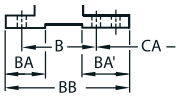

Types of construction IM B5 and IM V1

For flange dimensions, see page 1/59 (**Z** = the number of retaining holes)

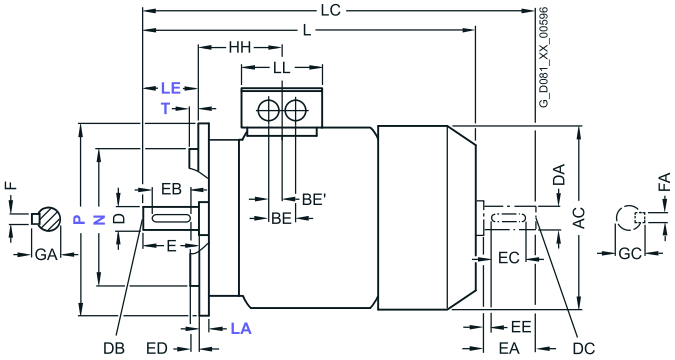

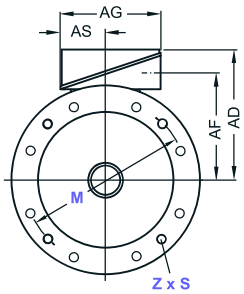

For motor			Dimension designation acc. to **IEC**																					
Frame size	Motor type 1MB1.5.- 1MB1.6.-	No. of poles	A	AA	**AB**	AC	**AD**	AD´	AF	AF´	AG	AS	B	BA	BA´	BB	BC	BE	BE´	C	CA	**H**	HA	Y
71 M	All	2, 4, 6, 8	112	25	**140**	169	**240**	–	195	–	163	81	90	30	45	125	76	36	18	45	199.5	**71**	10	35
80 M	All	2, 4, 6, 8	125	35	**160**	169	**249**	–	204	–	163	81	100	33	38	130	75.5	36	18	50	204	**80**	13	37.5
90 S/L	All	2, 4, 6, 8	140	40	**180**	182	**261**	–	216	–	163	81	125	41	40	155	80	36	18	56	239	**90**	13	41
100 L	All	2, 4, 6, 8	160	40	**205**	218	**259**	–	213	–	163	81	140	50	50	170	92	48	24	63	306	**100**	18	48
112 M	All	2, 4, 6, 8	190	45	**240**	230	**279**	–	233	–	163	81	140	50	50	170	92	48	24	70	280.5	**112**	18	55
132 S	All	2, 4, 6, 8	216	50	**260**	262	**295**	295	250	250	163	81	140	58	104	235	101	48	24	89	292	**132**	18	64
132 M	1CB2, 1CC3	4, 6	216	50	**260**	262	**295**	295	250	250	163	81	178	58	104	235	101	48	24	89	309	**132**	18	64
	1CC2, 1CD2	6, 8																			254			
160 M	All	2, 4, 6, 8	254	60	**310**	314	**351**	351	299	299	190	92	210	61	114	307	162.5	60	3	108	393	**160**	20	87.5
160 L	All	2, 4, 6, 8	254	60	**310**	314	**351**	351	299	299	190	92	254	61	114	307	162.5	60	3	108	349	**160**	20	87.5

© Innomotics 2024

Innomotics XP 1MB1, 1MB5 explosion-protected motors

IE3 – 1MB1 with types of protection Ex db, Ex db eb – self-ventilated · Frame sizes 71 M to 160 L

Dimensional drawings

Type of construction IM B14

For flange dimensions, see page 1/59 (**Z** = the number of retaining holes)

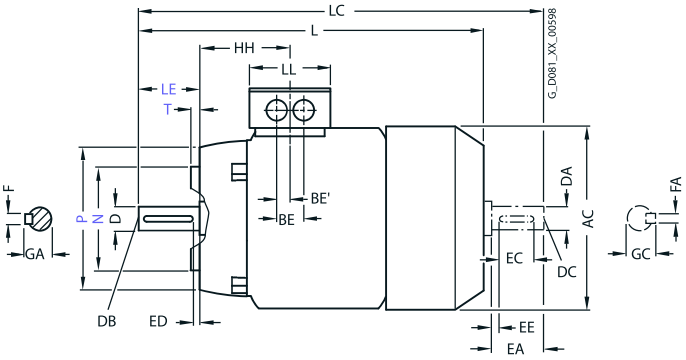

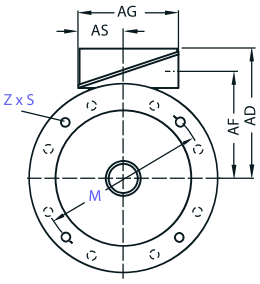

For motor			Dimension designation acc. to **IEC**						DE shaft extension							NDE shaft extension						
Frame size	Motor type 1MB1.5.- 1MB1.6.-	No. of poles	HH	K	K′	**L**	LC	LL	D	DB	E	EB	ED	F	GA	DA	DC	EA	EC	EE	FA	GC
71 M	All	2, 4, 6, 8	121	7	10	**350**	394.5	134	14	M5	30	22	4	5	16	14	M5	30	22	4	5	16
80 M	All	2, 4, 6, 8	125.5	10	15	**374**	434	134	19	M6	40	32	4	6	21.5	19	M6	40	32	4	6	21.5
90 S/L	All	2, 4, 6, 8	136	10	15	**450**	510	134	24	M8	50	40	5	8	27	19	M6	40	32	4	6	21.5
100 L	All	2, 4, 6, 8	155	12	19	**544**	619	134	28	M10	60	50	5	8	31	24	M8	50	40	5	8	27
112 M	All	2, 4, 6, 8	162	12	19	**520**	600.5	134	28	M10	60	50	5	8	31	24	M8	50	40	5	8	27
132 S	All	2, 4, 6, 8	190	12	19	**571**	661	134	38	M12	80	70	5	10	41	28	M10	60	50	5	8	31
132 M	1CB2, 1CC3	4, 6	190	12	19	**626**	716	134	38	M12	80	70	5	10	41	28	M10	60	50	5	8	31
	1CC2, 1CD2	6, 8				**571**	661															
160 M	All	2, 4, 6, 8	270.5	14.5	23	**786**	931	165	42	M16	110	90	10	12	45	42	M16	110	90	10	12	45
160 L	All	2, 4, 6, 8	270.5	14.5	23	**786**	931	165	42	M16	110	90	10	12	45	42	M16	110	90	10	12	45

© Innomotics 2024

Innomotics XP 1MB1, 1MB5 explosion-protected motors

IE3 – 1MB1 with types of protection Ex db, Ex db eb – self-ventilated · Frame sizes 180 M to 280 M

Dimensional drawings

Type of construction IM B3

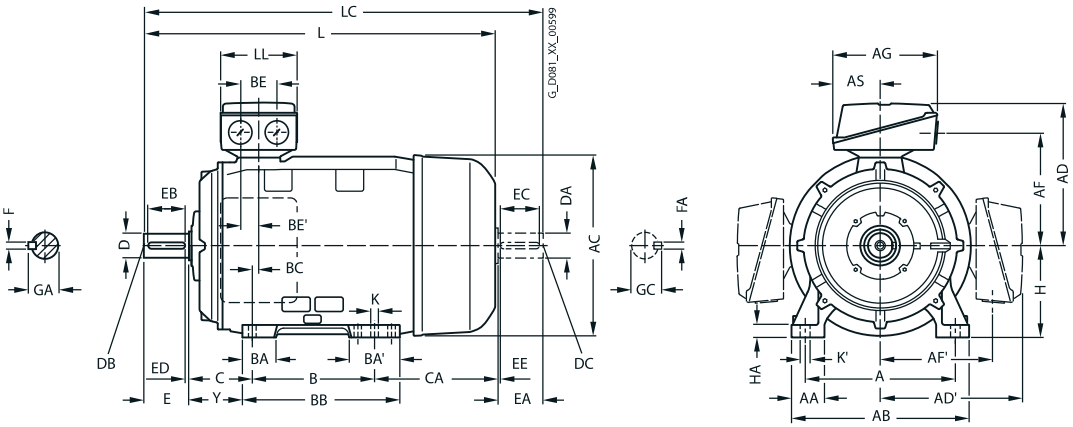

Types of construction IM B5 and IM V1

For flange dimensions, see page 1/59 (**Z** = the number of retaining holes)

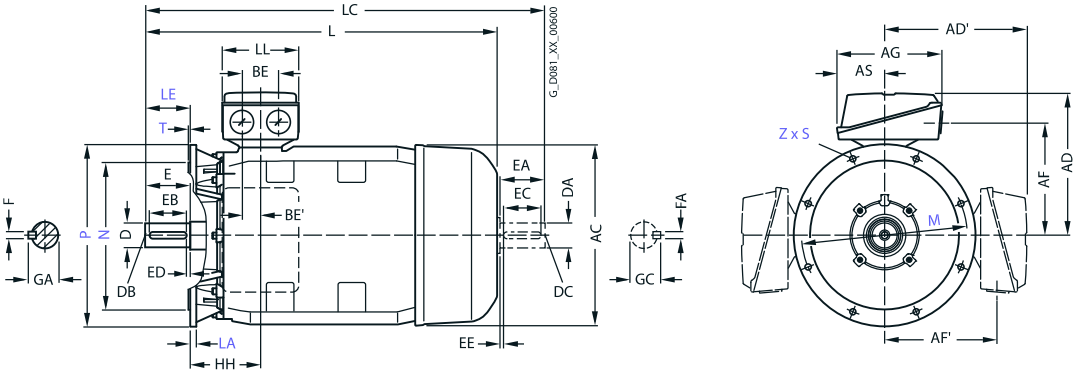

For motor			Dimension designation acc. to **IEC**																		
Frame size	Motor type 1MB1.5.- 1MB1.6.-	No. of poles	A	AA	**AB**	AC	**AD**	AD´	AF	AF´	AG	AS	B	BA	BA´	BB	BC	BE	BE´	C	CA
180 M	1EA2, 1EB2	2, 4	279	70	**349**	353	**388**	388	336	336	190	92	241	100	170	359	184	60	30	121	411
180 L	4EB4, 1EC4, 1ED4	4, 6, 8	279	70	**349**	353	**388**	388	336	336	190	92	279	100	170	359	184	60	30	121	373
200 L	All	2, 4, 6, 8	318	80	**400**	393	**447**	447	390	390	266	112	305	120	142	425	217	85	42.5	133	411
225 S	2BB0, 2BD0	4, 8	356	90	**446**	439	**467**	467	410	410	266	112	286	115	209	438	221	85	42.5	149	494
225 M	2BA2	2	356	90	**446**	439	**467**	467	410	410	266	112	311	115	209	438	221	85	42.5	149	469
	2BB2, 2BC2, 2BD2	4, 6, 8																			
250 M	2CA2	2	406	100	**505**	487	**502**	502	414	414	319	145	349	123	128	420	188	110	55	168	422
	2CB2, 2CC2, 2CD2	4, 6, 8																			
280 S	2CA0	2	457	110	**570**	540	**524**	524	436	436	319	145	368	173	177	520	252	110	55	190	496
	2DB0, 2DC0, 2DC0	4, 6, 8																			
280 M	2DA2	2	457	110	**570**	540	**524**	524	436	436	319	145	419	173	177	520	252	110	55	190	445
	2CB2, 2DC2, 2DD2	4, 6, 8																			

© Innomotics 2024

Innomotics XP 1MB1, 1MB5 explosion-protected motors

IE3 – 1MB1 with types of protection Ex db, Ex db eb – self-ventilated · Frame sizes 180 M to 280 M

Dimensional drawings

Type of construction IM B35

For flange dimensions, see page 1/59 (**Z** = the number of retaining holes)

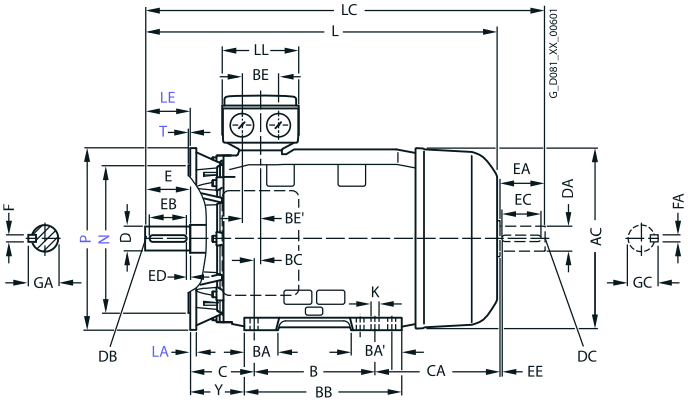

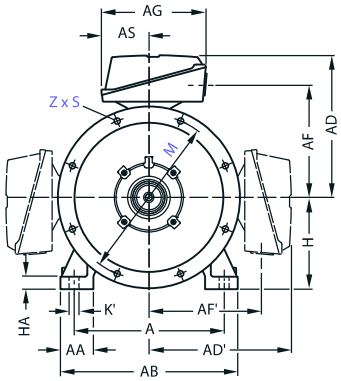

For motor			Dimension designation acc. to **IEC**									DE shaft extension							NDE shaft extension						
Frame size	Motor type 1MB1.5.- 1MB1.6.-	No. of poles	**H**	HA	Y	HH	K	K´	**L**	LC	LL	D	DB	E	EB	ED	F	GA	DA	DC	EA	EC	EE	FA	GC
180 M	1EA2, 1EB2	2, 4	**180**	19	97	305	14.5	22	**838**	993	165	48	M16	110	100	5	14	51.5	48	M16	110	100	5	14	51.5
180 L	4EB4, 1EC4, 1ED4	4, 6, 8	**180**	19	97	305	14.5	22	**838**	993	165	48	M16	110	100	5	14	51.5	48	M16	110	100	5	14	51.5
200 L	All	2, 4, 6, 8	**200**	25	101	350	18.5	25	**899**	1069	197	55	M20	110	100	5	16	59	55	M20	110	100	5	16	59
225 S	2BB0, 2BD0	4, 8	**225**	25.5	117	370	18.5	25	**1004**	1179	197	60	M20	140	125	10	18	64	55	M20	110	100	5	16	59
225 M	2BA2	2	**225**	25.5	117	370	18.5	25	**974**	1149	197	55	M20	110	100	5	16	59	48	M16	110	100	5	14	51.5
	2BB2, 2BC2, 2BD2	4, 6, 8							**1004**	1179		60		140	125	10	18	64	55	M20				16	59
250 M	2CA2	2	**250**	35	133	356	24	40	**1014**	1189	233	60	M20	140	125	10	18	64	55	M20	110	100	5	16	59
	2CB2, 2CC2, 2CD2	4, 6, 8								1219		65						69	60		140	125	10	18	64
280 S	2CA0	2	**280**	40	140	442	24	40	**1124**	1334	233	65	M20	140	125	10	18	69	60	M20	140	125	10	18	64
	2DB0, 2DC0, 2DC0	4, 6, 8										75					20	79.5	65						69
280 M	2DA2	2	**280**	40	140	442	24	40	**1124**	1334	233	65	M20	140	125	10	18	69	60	M20	140	125	10	18	64
	2CB2, 2DC2, 2DD2	4, 6, 8										75					20	79.5	65						69

© Innomotics 2024

Innomotics XP 1MB1, 1MB5 explosion-protected motors

IE3 – 1MB5 with types of protection Ex db, Ex db eb – self-ventilated · Frame sizes 315 S to 355 L

Dimensional drawings

Type of construction IM B3

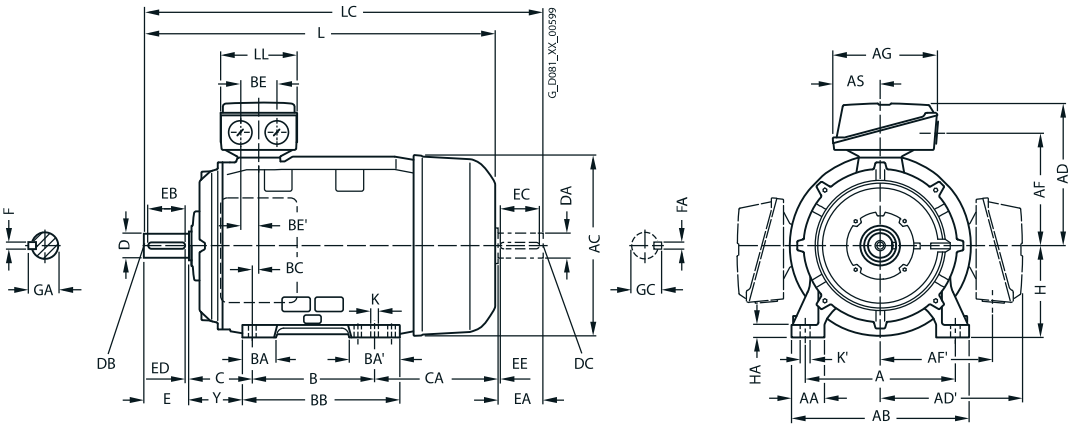

Types of construction IM B5 and IM V1

For flange dimensions, see page 1/59 (**Z** = the number of retaining holes)

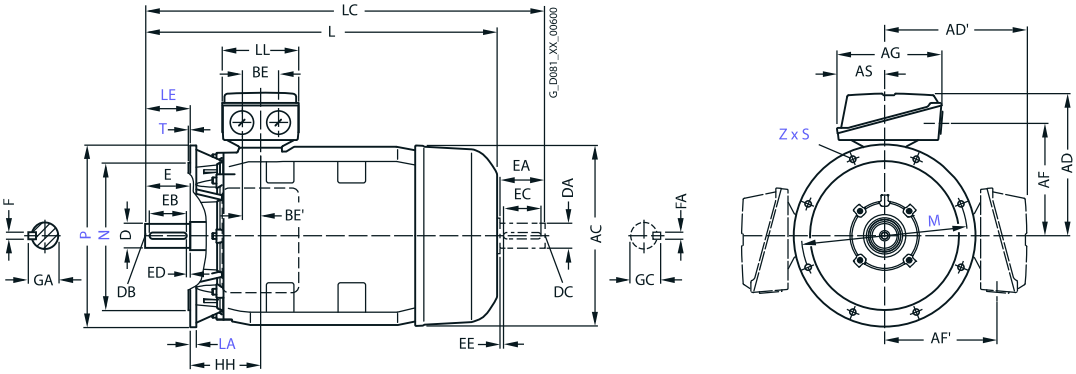

6

For motor			Dimension designation acc. to **IEC**																		
Frame size	Motor type 1MB5.5.- 1MB5.6.-	No. of poles	A	AA	**AB**	AC	**AD**	AD'	AF	AF'	AG	AS	B	BA	BA'	BB	BC	BE	BE'	C	CA
315 S	3AA0	2	508	120	**610**	668	**603**	603	509	509	509	167	406	140	196	602	169	120	60	216	497
	3AB0, 3AC0, 3AD0	4, 6, 8																			
315 M	3AA2	2	508	120	**610**	668	**603**	603	509	509	509	167	457	140	286	692	169	120	60	216	536
	3AB2	4													286	692					536
	3AC2, 3AD2	6, 8													196	602					446
315 L	3AA4	2	508	120	**610**	668	**603**	603	509	509	509	167	508	140	286	692	169	120	60	216	485
	3AA5														305	762					555
	3AA6														334	842	254				635
	3AB4, 3AC4, 3AD5, 3AD6	4, 6, 8													286	692	169				485
	3AB5, 3AC5, 3AC6	4, 6													305	762	169				555
	3AB6, 3AC7, 3AD7	4, 6, 8													334	842	254				635
	3AD4	8											457		196	602	169				446
355 S	3BD0	8	508	120	**610**	668	**603**	603	509	509	509	167	457	140	196	602	169	120	60	216	446
	3BD1																				
355 M	3BD2	8	508	120	**610**	668	**603**	603	509	509	509	167	457	140	196	602	169	120	60	216	446
355 L	3BA2	2	610	150	**780**	736	**710**	710	590	590	570	175	630	187	350	893	230	120	60	254	535
	3BA3														365	968					610
	3BA4, 3BA5													191	401	1078					720
	3BB2, 3BB3	4												187	350	893					535
	3BB4, 3BC1	4, 6													365	968					
	3BB5, 3BC2, 3BC3, 3BC4	4, 6, 8												191	401	1078					

© Innomotics 2024

Innomotics XP 1MB1, 1MB5 explosion-protected motors

IE3 – 1MB5 with types of protection Ex db, Ex db eb – self-ventilated · Frame sizes 315 S to 355 L

Dimensional drawings

Type of construction IM B35

For flange dimensions, see page 1/59 (**Z** = the number of retaining holes)

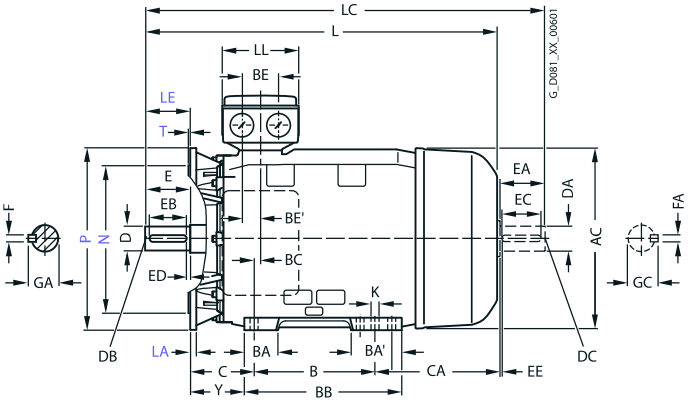

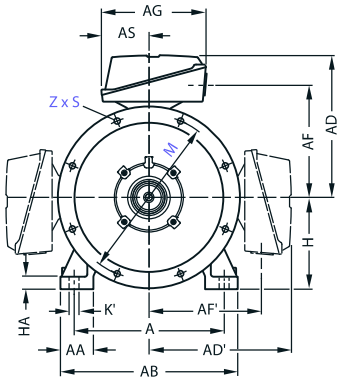

For motor			Dimension designation acc. to **IEC**									DE shaft extension							NDE shaft extension						
Frame size	Motor type 1MB5.5.- 1MB5.6.-	No. of poles	**H**	HA	Y	HH	K	K'	**L**	LC	LL	D	DB	E	EB	ED	F	GA	DA	DC	EA	EC	EE	FA	GC
315 S	3AA0	2	**315**	50	146	385	28	28	**1189**	1399	327	65	M20	140	125	10	18	69	60	M20	140	125	10	18	64
	3AB0, 3AC0, 3AD0	4, 6, 8							**1219**	1429		80	M20	170	140	25	22	85	70					20	74.5
315 M	3AA2	2	**315**	50	146	385	28	28	**1279**	1489	327	65	M20	140	125	10	18	69	60	M20	140	125	10	18	64
	3AB2	4							**1309**	1519		80		170	140	25	22	85	70					20	74.5
	3AC2, 3AD2	6, 8							**1219**	1429															
315 L	3AA4	2	**315**	50	146	385	28	28	**1279**	1489	327	65	M20	140	125	10	18	69	60	M20	140	125	10	18	64
	3AA5								**1349**	1559															
	3AA6					470			**1429**	1639															
	3AB4, 3AC4, 3AD5, 3AD6	4, 6, 8				385			**1309**	1519		80		170	140	25	22	85	70					20	74.5
	3AB5, 3AC5, 3AC6	4, 6				385			**1379**	1589															
	3AB6, 3AC7, 3AD7	4, 6, 8				470			**1459**	1669															
	3AD4	8				385			**1219**	1429															
355 S	3BD0	8	**355**	50	146	385	28	28	**1584**	1834	497	95	M24	170	140	25	25	100	80	M20	170	140	25	22	85
	3BD1								**1694**	1944															
355 M	3BD2	8	**355**	50	146	385	28	28	**1694**	1944	497	95	M24	170	140	25	25	100	80	M20	170	140	25	22	85
355 L	3BA2	2	**355**	50	139	385	35	35	**1479**	1699	497	75	M20	140	125	10	20	79.5	60	M20	140	125	10	18	64
	3BA3								**1554**	1774															
	3BA4, 3BA5								**1664**	1884															
	3BB2, 3BB3	4							**1509**	1759		95	M24	170	140	25	25	100	80	M20	170	125	25	22	85
	3BB4, 3BC1	4, 6							**1584**	1834															
	3BB5, 3BC2, 3BC3, 3BC4	4, 6, 8							**1694**	1944															

© Innomotics 2024

Innomotics XP 1MB1, 1MB5 explosion-protected motors

IE2 – 1MB1 with types of protection Ex tb, Ex tc, Ex ec – self-ventilated · Frame sizes 71 M to 160 L

Dimensional drawings

Type of construction IM B3

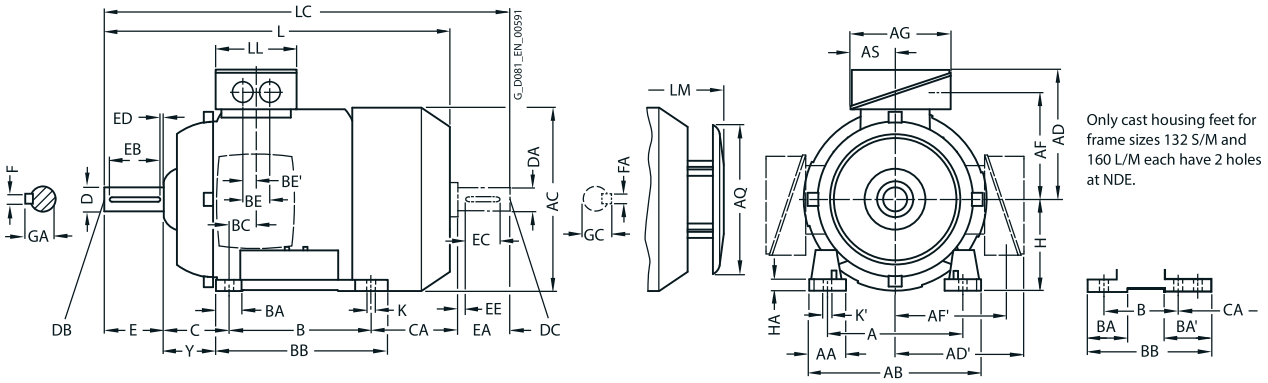

Types of construction IM B5 and IM V1

For flange dimensions, see page 1/59 (**Z** = the number of retaining holes)

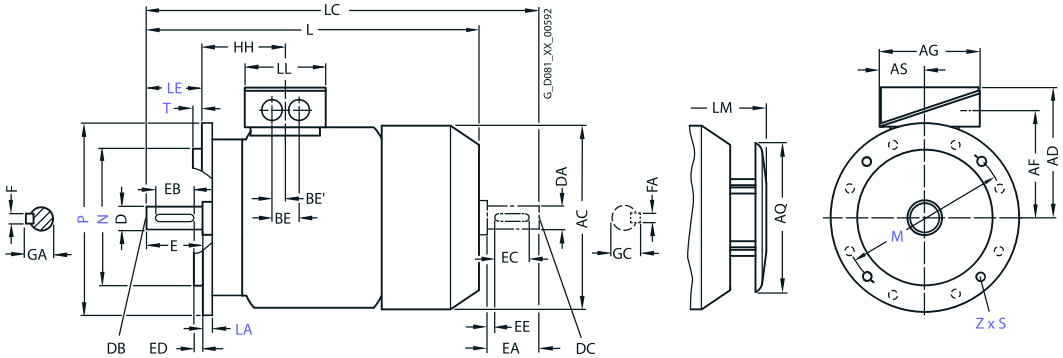

For motor			Dimension designation acc. to **IEC**																					
Frame size	Motor type 1MB15.1-, 1MB16.1-	No. of poles	A	AA	**AB**	AC	**AD**	AD'	AF	AF'	AG	AS	B	BA	BA'	BB	BC	BE	BE'	C	CA	**H**	HA	Y
71 M	0CA2, 0CB2, 0CC2, 0CD2	2, 4, 6, 8	112	30.5	**132**	145	**149**	149	112	112	126	62	90	32	32	106	21	36	18	45	83	**71**	7	37
	0CA3, 0CB3, 0CC3, 0CD3																28							
80 M	0DA2, 0DB2, 0DC2, 0DD2	2, 4, 6, 8	125	30.5	**150**	162	**159**	159	122	122	126	62	100	32	32	118	22.5	36	18	50	112.5	**80**	8	41
	0DA3, 0DB3, 0DC3, 0DD3																							
90 S	All	2, 4, 6, 8	140	30.5	**165**	180	**164**	164	127	127	126	62	100	33	54	143	24.5	36	18	56	149	**90**	10	47
90 L	All	2, 4, 6, 8	140	30.5	**165**	180	**164**	164	127	127	126	62	125	33	54	143	24.5	36	18	56	124	**90**	10	47
100 L	All	2, 4, 6, 8	160	42	**196**	198	**193**	193	147	147	163	80.5	140	40	40	176	37.5	48	24	63	141	**100**	12	45
112 M	1BA2, 1BB2, 1BC2	2, 4, 6	190	46	**226**	222	**195**	195	150	150	163	80.5	140	40	40	176	30	48	24	70	129.7	**112**	12	52
	1BD2	8																						
132 S	All	2, 4, 6, 8	216	53	**256**	262	**214.5**	214.5	169	169	163	80.5	140	44	81[1]	218[3]	26.5	48	24	89	167	**132**	15	69
132 M	All	2, 4, 6, 8	216	53	**256**	262	**214.5**	214.5	169	169	163	80.5	178	44	81[1]	218	26.5	48	24	89	129	**132**	15	69
160 M	All	2, 4, 6, 8	254	60	**300**	314	**265**	265	213	213	190	92	210	51	95[2]	300[4]	37	60	30	108	192	**160**	18	85
160 L	All	2, 4, 6, 8	254	60	**300**	314	**265**	265	213	213	190	92	254	51	95[2]	300	37	60	30	108	148	**160**	18	85

[1] With screwed-on feet, dimension BA' is 43 mm.
[2] With screwed-on feet, dimension BA' is 51 mm.
[3] With screwed-on feet, dimension BB is 180 mm.
[4] With screwed-on feet, dimension BB is 256 mm.

© Innomotics 2024

Innomotics XP 1MB1, 1MB5 explosion-protected motors

IE2 – 1MB1 with types of protection Ex tb, Ex tc, Ex ec – self-ventilated · Frame sizes 71 M to 160 L

Dimensional drawings

Type of construction IM B35

For flange dimensions, see page 1/59 (**Z** = the number of retaining holes)

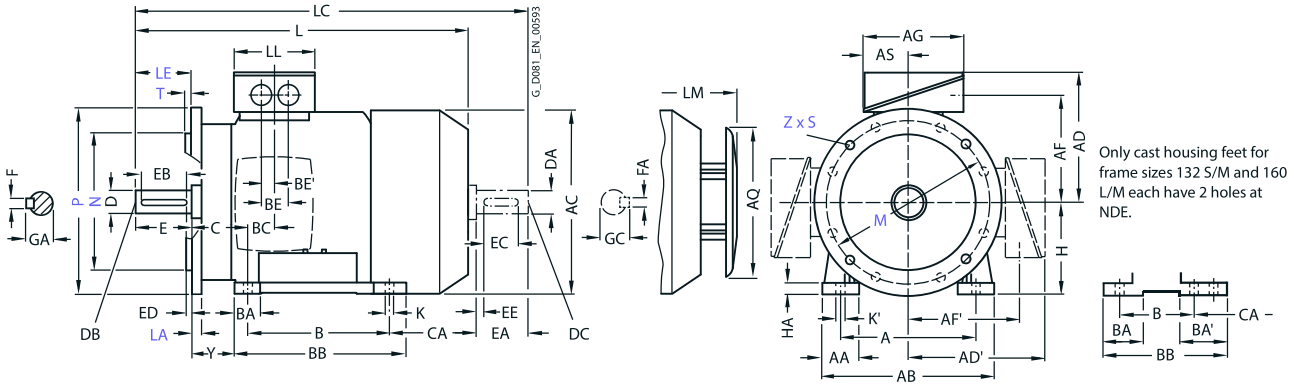

Type of construction IM B14

For flange dimensions, see page 1/59 (**Z** = the number of retaining holes)

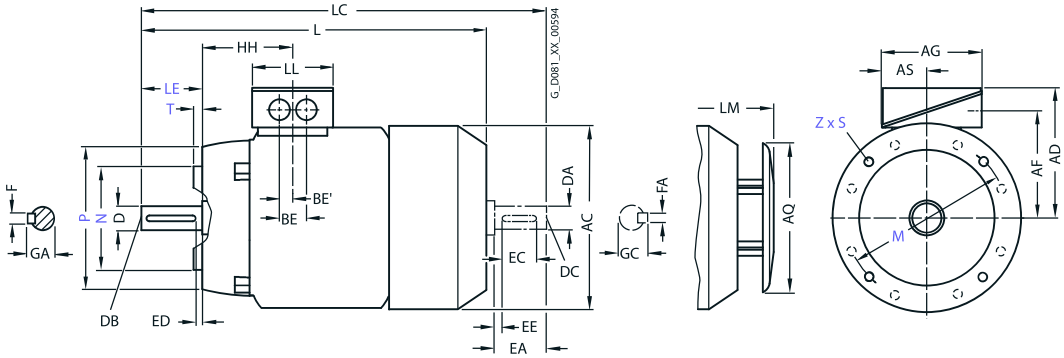

For motor			Dimension designation acc. to **IEC**						DE shaft extension							NDE shaft extension						
Frame size	Motor type 1MB15.1-, 1MB16.1-	No. of poles	HH	K	K'	**L**	LC	LL	D	DB	E	EB	ED	F	GA	DA	DC	EA	EC	EE	FA	GC
71 M	0CA2, 0CB2, 0CC2, 0CD2	2, 4, 6, 8	63	7	7	**240**	278	102	14	M5	30	22	4	5	16	14	M5	30	22	4	5	16
	0CA3, 0CB3, 0CC3, 0CD3		70			**280**	318															
80 M	0DA2, 0DB2, 0DC2, 0DD2	2, 4, 6, 8	72.5	10	13.5	**292**	342.5	102	19	M6	40	32	4	6	21.5	19	M6	40	32	4	6	21.5
	0DA3, 0DB3, 0DC3, 0DD3					**327**	377.5															
90 S	All	2, 4, 6, 8	80.5	10	10	**347**	405	102	24	M8	50	40	5	8	27	24	M8	50	40	5	8	27
90 L	All	2, 4, 6, 8	80.5	10	10	**387**	445	102	24	M8	50	40	5	8	27	24	M8	50	40	5	8	27
100 L	All	2, 4, 6, 8	100.5	12	16	**390.5**	454	134	28	M10	60	50	5	8	31	24	M8	50	40	5	8	27
112 M	1BA2, 1BB2, 1BC2	2, 4, 6	100.5	12	16	**390.5**	450	134	28	M10	60	50	5	8	31	24	M8	50	40	5	8	27
	1BD2	8				**408.5**	475															
132 S	All	2, 4, 6, 8	115.5	12	16	**458**	536	134	38	M12	80	70	5	10	41	28	M10	60	50	5	8	31
132 M	All	2, 4, 6, 8	115.5	12	16	**458**	536	134	38	M12	80	70	5	10	41	28	M10	60	50	5	8	31
160 M	All	2, 4, 6, 8	145	15	19	**596**	730	165	42	M16	110	90	10	12	45	42	M16	110	90	10	12	45
160 L	All	2, 4, 6, 8	145	15	19	**596**	730	165	42	M16	110	90	10	12	45	42	M16	110	90	10	12	45

© Innomotics 2024

Innomotics XP 1MB1, 1MB5 explosion-protected motors

IE2 – 1MB1 with types of protection Ex tb, Ex tc, Ex ec – self-ventilated · Frame sizes 180 M to 250 M

Dimensional drawings

Type of construction IM B3

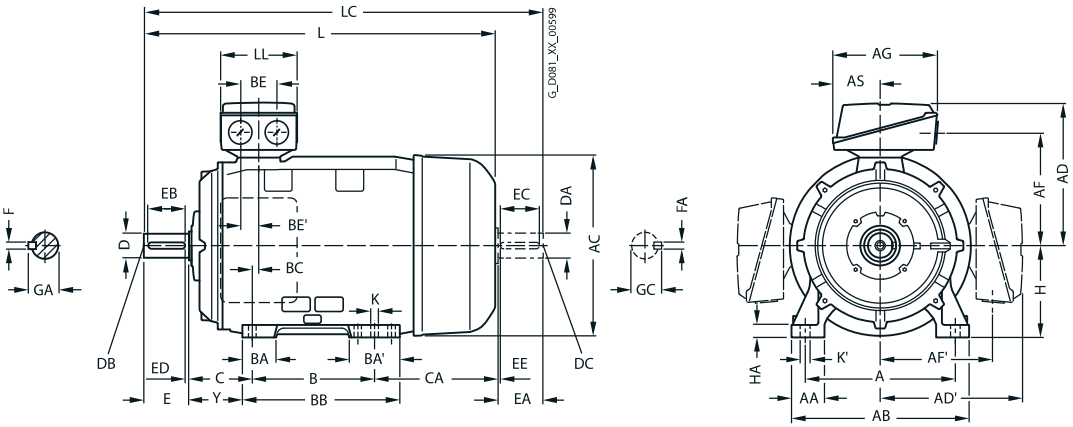

Types of construction IM B5 and IM V1

For flange dimensions, see page 1/59 (**Z** = the number of retaining holes)

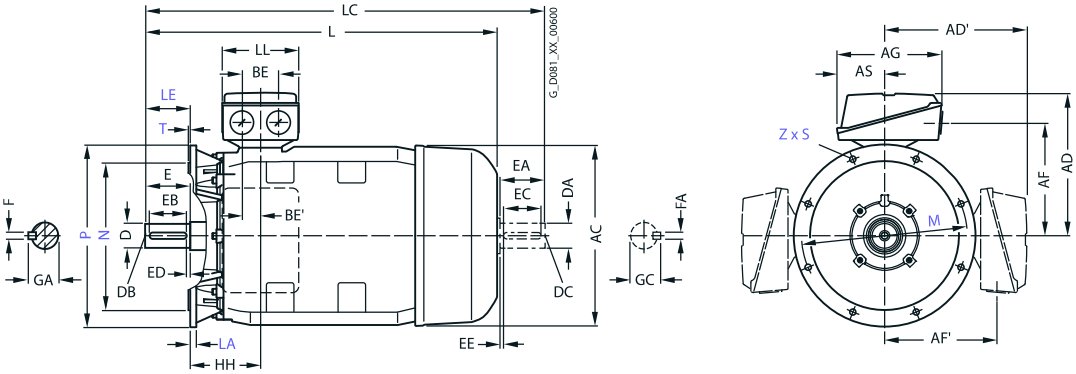

6

For motor			Dimension designation acc. to **IEC**																			
Frame size	Motor type 1MB15.1-, 1MB16.1-	No. of poles	A	AA	**AB**	AC	**AD**	AD'	AF	AF'	AG	AH	AS	B	BA	BA'	BB	BC	BE	BE'	C	CA
180 M/ 180 L	1EA2, 1EB24 1EC4, 1ED4 1EB4	2, 4 6, 8 4	279	65	**339**	356	**286**	286	234	234	190	468	92	241 279	85	120	328	34	60	30	121	202
200 L	All	2, 4, 6, 8	318	60	**378**	396	**315**	315	259	259	266	533	112	305	104	104	355	31	85	42.5	133	177
225 S/ 225 M	2BB0, 2BD0, 2BB2, 2BC2, 2BD2 2BA2	4, 8 4, 6, 8 2	356	80	**436**	449	**338**	338	282	282	266	556	112	311	92	117	361	15	85	42.5	149	253
250 M	2CA2 2CB2, 2CC2, 2CD2	2 4, 6, 8	406	100	**490**	497	**410**	410	322	322	319	620	145	349	102	102	409	24	110	55	168	230

© Innomotics 2024

Innomotics XP 1MB1, 1MB5 explosion-protected motors

IE2 – 1MB1 with types of protection Ex tb, Ex tc, Ex ec – self-ventilated · Frame sizes 180 M to 250 M

Dimensional drawings

Type of construction IM B35

For flange dimensions, see page 1/59 (**Z** = the number of retaining holes)

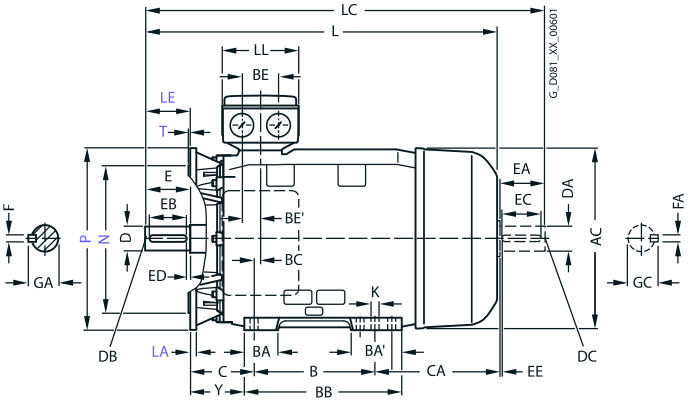

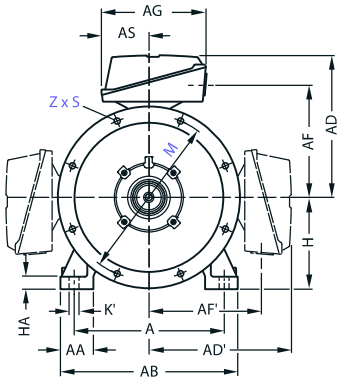

6

For motor			Dimension designation acc. to **IEC**									DE shaft extension							NDE shaft extension						
Frame size	Motor type 1MB15.1-, 1MB16.1-	No. of poles	**H**	HA	Y	HH	K	K'	**L**	LC	LL	D	DB	E	EB	ED	F	GA	DA	DC	EA	EC	EE	FA	GC
180 M/ 180 L	1EA2, 1EB2	2, 4	**180**	20	95	155	15	19	**668**	784	165	48	M16	110	100	5	14	52	48	M16	110	100	5	14	51.5
	1EC4, 1ED4	6, 8																							
	1EB4	4							**698**	814															
200 L	All	2, 4, 6, 8	**200**	25	108	164	19	25	**721**	835	197	55	M20	110	100	5	16	59	55	M20	110	100	5	16	59
225 S/ 225 M	2BB0, 2BD0,	4, 8	**225**	34	124	164	19	25	**788**	903	197	60	M20	140	125	10	18	64	55	M20	110	100	5	16	59
	2BB2, 2BC2, 2BD2	4, 6, 8							**848**	963															
	2BA2	2							**818**	933		55		110	100	5	16	59	48	M16				14	51.5
250 M	2CA2	2	**250**	40	138	192	24	30	**887**	1002	233	60	M20	140	125	10	18	64	55	M20	110	100	5	16	59
	2CB2, 2CC2, 2CD2	4, 6, 8								1032		65						69	60		140	125	10	18	64

© Innomotics 2024

Innomotics XP 1MB1, 1MB5 explosion-protected motors

IE2 – 1MB1 with types of protection Ex tb, Ex tc, Ex ec – self-ventilated · Frame sizes 280 S to 315 L

Dimensional drawings

Type of construction IM B3

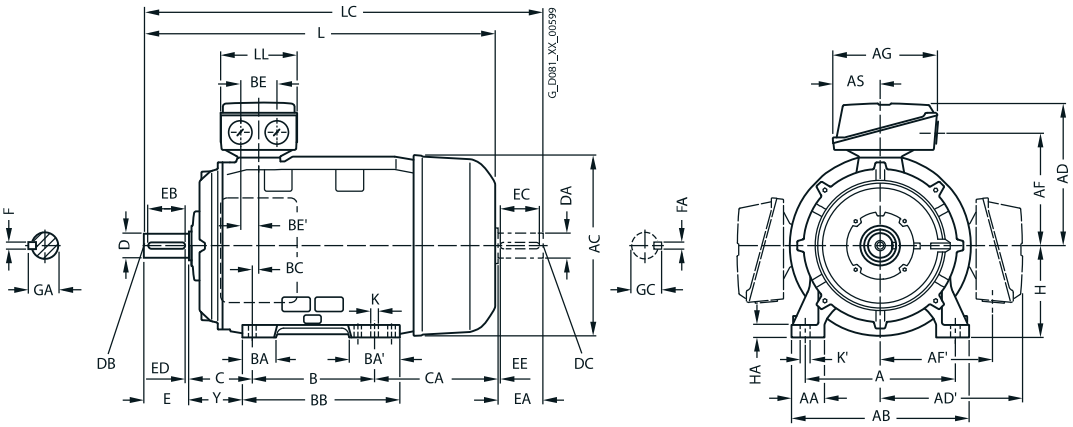

Types of construction IM B5 and IM V1

For flange dimensions, see page 1/59 (**Z** = the number of retaining holes)

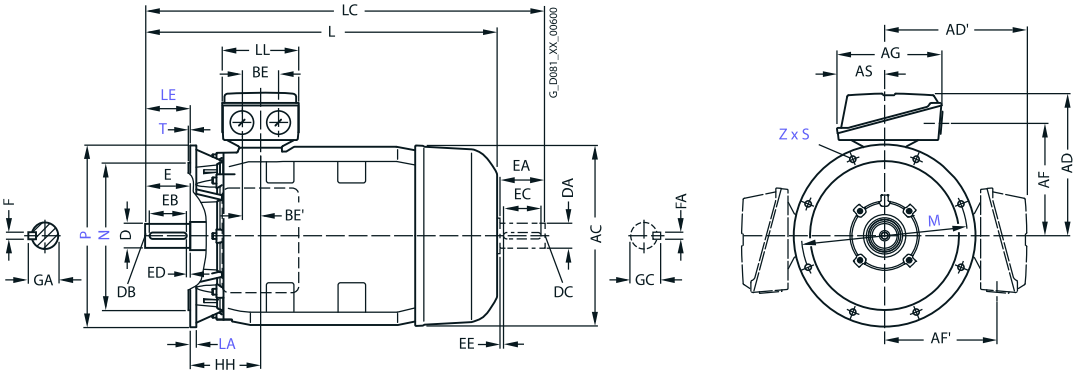

6

For motor			Dimension designation acc. to **IEC**																			
Frame size	Motor type 1MB15.1-, 1MB16.1-	No. of poles	A	AA	**AB**	AC	**AD**	AD'	AF	AF'	AG	AH	AS	B	BA	BA'	BB	BC	BE	BE'	C	CA
280 S	2DA0	2	457	100	**540**	551	**433**	433	345	345	319	672	145	368	101	152	479	20	110	55	190	267
	2DB0, 2DC0, 2DD0	4, 6, 8																				
280 M	2DA2	2	457	100	**540**	551	**433**	433	345	345	319	672	145	419	101	152	479	20	110	55	190	216
	2DB2, 2DC2, 2DD2	4, 6, 8																				
315 S	3AA0	2	508	120	**610**	616	**515**	515	404	404	374	780	164	406	113	170	527	22	110	55	216	295
	3AB0, 3AC0, 3AD0	4, 6, 8																				
315 M	3AA2	2	508	120	**610**	616	**515**	515	404	404	374	780	164	457	113	170	578	22	110	55	216	409
	3AB2	4																				
	3AC2, 3AD2	6, 8															327					244
315 L	3AA4	2	508	120	**610**	616	**515**	515	404	404	374	780	164	508	113	170	578	22	110	55	216	358
	3AB4, 3AC4, 3AD4, 3AC5, 3AD5, 3AD6	4, 6, 8																				
	3AA5	2													176	227	648					513
	3AB5[1], 3AC6[1]	4, 6																				

[1] When ordering a terminal box positioned on the left-hand side or right-hand side, the feet are screwed on as standard.
These screwed-on feet have 3 drill holes on the NDE with the respective dimension B 406, 457 and 508 mm; the dimension BB is 666 mm.

© Innomotics 2024

Innomotics XP 1MB1, 1MB5 explosion-protected motors

IE2 – 1MB1 with types of protection Ex tb, Ex tc, Ex ec – self-ventilated · Frame sizes 280 S to 315 L

Dimensional drawings

Type of construction IM B35

For flange dimensions, see page 1/59 (**Z** = the number of retaining holes)

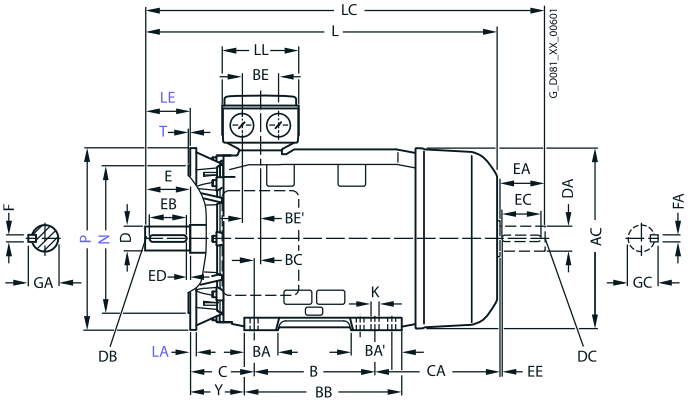

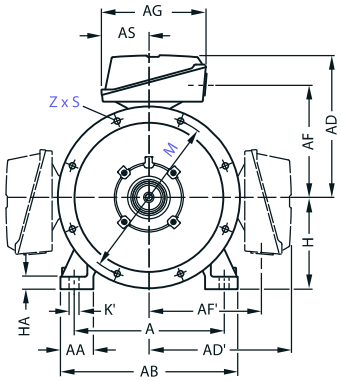

6

For motor			Dimension designation acc. to **IEC**									DE shaft extension							NDE shaft extension						
Frame size	Motor type 1MB15.1-, 1MB16.1-	No. of poles	**H**	HA	Y	HH	K	K'	**L**	LC	LL	D	DB	E	EB	ED	F	GA	DA	DC	EA	EC	EE	FA	GC
280 S	2DA0	2	**280**	40	160	210	24	30	**960**	1105	233	65	M20	140	125	10	18	69	60	M20	140	125	10	18	64
	2DB0, 2DC0, 2DD0	4, 6, 8										75					20	79.5	65						69
280 M	2DA2	2	**280**	40	160	210	24	30	**960**	1105	233	65	M20	140	125	10	18	69	60	M20	140	125	10	18	64
	2DB2, 2DC2, 2DD2	4, 6, 8										75					20	79.5	65						69
315 S	3AA0	2	**315**	50	181	238	28	35	**1052**	1197	299	65	M20	140	125	10	18	69	60	M20	140	125	10	18	64
	3AB0, 3AC0, 3AD0	4, 6, 8							**1082**	1227		80		170	140	25	22	85	70					20	74.5
315 M	3AA2	2	**315**	50	181	238	28	35	**1217**	1362	299	65	M20	140	125	10	18	69	60	M20	140	125	10	18	64
	3AB2	4							**1247**	1392		80		170	140	25	22	85	70					20	74.5
	3AC2, 3AD2	6, 8							**1082**	1227															
315 L	3AA4	2	**315**	50	181	238	28	35	**1217**	1362	299	65	M20	140	125	10	18	69	60	M20	140	125	10	18	64
	3AB4, 3AC4, 3AD4, 3AC5, 3AD5, 3AD6	4, 6, 8							**1247**	1392		80		170	140	25	22	85	70					20	74.5
	3AA5	2			146				**1372**	1517		65		140	125	10	18	69	60					18	64
	3AB5, 3AC6	4, 6							**1402**	1547		80		170	140	25	22	85	70					20	74.5

© Innomotics 2024

Innomotics DP application-specific motors

© Innomotics 2024

7

© Innomotics 2024

© Innomotics 2024

7 Innomotics DP application-specific motors

7/2 Introduction

7/3 Marine motors

7/3 Orientation

7/9 Special versions

7/9 Options
7/9 _ Aluminum series 1LE10
7/10 _ Cast-iron series 1LE15/1LE16 Basic/Performance Line
7/11 _ Cast-iron series 1LE55/1LE56 Basic/Performance Line
7/12 _ Aluminum series 1MB10, Cast-iron series 1MB15/1MB16/1MB55

© Innomotics 2024

Innomotics DP application-specific motors

Overview

With the designation Innomotics DP, Innomotics offers a number of industry and application specific (**D**efinite **P**urpose) motors that differ from standard motors in that they have special industry/ application-specific features:

Innomotics DP marine motors

Marine motors are exposed to air humidity and other hostile conditions on the high seas and must always perform their function reliably. Our marine motors meet the standards of the leading classification companies (DNV, BV, LR, RS, KR, ABS, RINA) and have type test certifications up to frame size 315 L. They are basically suitable for the higher ambient temperatures in engine rooms below deck. If requested, a representative of the marine classification society can be present in our factories to formally accept equipment.

You will find more information on marine motors on the following pages.

Innomotics DP steel plant motors

The steel plant motors are specially designed for applications in the steel industry with stringent requirements for vibrations and shocks according to class 3M4 (EN 60721-3-3). They provide an optimized technical and economic solution for numerous transportation tasks in the steel manufacturing process or in steel manufacturing facilities, in which no scale dust occurs. Steel plant motors can be operated at a constant speed directly on the line or are used together with the SINAMICS S120 converter for dynamic processes.

The ordering data for Innomotics DP steel plant motors can be found in the Catalog ME 81 – Motors for the steel industry.

Innomotics DP roller table and steel plant motors

Innomotics DP roller table and steel plant motors are designed for directly driving the rollers of working roller tables in reversing rolling mills. They are designed as completely enclosed three-phase induction motors, with a housing made of spheroidal graphite cast iron, ring ribs, and reinforced bearing shields.
This makes the motors ideal for use with typical shocks and vibrations and severe dirt due to scale dust. On account of their special mechanical design, they meet the most stringent requirements demanded by this application. Of course, the motors are also designed for variable-speed reversing operation on frequency converters of the SINAMICS S and G series.

The ordering data for Innomotics DP roller table and steel plant motors can be found in the Catalog ME81 – Motors for the steel industry.

Innomotics DP crane motors

Like marine motors, crane motors are exposed to extreme climatic conditions and must meet tough operating requirements. Our crane motors stand up to high humidity levels, salt-laden air, and high wind speeds. They are characterized by high overload capability and a large speed setting range, for example, to operate hoist mechanisms efficiently in converter operation. Innomotics DP crane motors are reliably protected against corrosion with especially elaborate paint finishes and sealing. The rugged cast-iron motors are especially suitable for tough operation under hostile conditions, for indoor and outdoor use, e.g. in harbor facilities for rubber-tired gantry, rail-mounted gantry, and automatic stacking cranes. Special pulse encoders and brakes round off the product to form a perfectly adapted solution.

You can obtain further information on the Innomotics DP crane motors from your Siemens contact and found in the catalog CR_81.

© Innomotics 2024

Innomotics DP application-specific motors - Marine motors

Overview

Low-voltage motors in the marine version can be used below deck on ships and in the offshore industry. The thermal utilization of the motors is adapted to the generally higher ambient temperatures onboard ships. If the application demands compliance with additional regulations, such as explosion protection (Directive 2014/34/EU (ATEX 95)), the appropriate motor series must be chosen.

The motors on board ships are generally subdivided into three classes of importance by the marine classification societies in cooperation with customers, depending on the field of application:

- **Essential Service for Propulsion** or also referred to as Primary Essential Service
- **Essential Service** or also referred to as Secondary Essential Service or Important Service
- **Non-Essential Service** or also referred to as Non-Important Service

The class of importance must be specified by the customer (ordering party). Retrospective certification by means of individual acceptance test or construction supervision cannot be issued.

The categories include the following requirements of the classification societies:

	Class of importance		
	Essential Service for Propulsion	**Essential Service**	**Non-Essential Service**
Typical applications	Propeller drive, thruster	Thrusters, lateral thrust units, anchor winches, bilge and ballast pumps, fire-fighting pumps	Pumps for service water
Version	In accordance with the regulations set up by the classification society		In accordance with ambient conditions set up by the classification society
Inspection certificate	Inspection certificate 3.2 in accordance with EN 10204	Inspection certificate 3.1 in accordance with EN 10204	None
Individual acceptance by classification society	Necessary if no type test certificate exists or the classification society has defined it based on the application		Not required
Type test	Not a requirement of the classification societies For standard motors up to frame size 355, a type test certificate is supplied. These motors can only be ordered with options E11 to E54 in accordance with the classification society.		
Ordering several identical motors	Differentiation between the first motor and additional ones must be realized when ordering using an order code		No distinction
Rating plate data	Information about ambient conditions of the classification society		
Stamp of the classification society	Stamp on shaft and housing		No stamp

Classification societies

Society	Abbreviation	Location
American Bureau of Shipping	**ABS**	USA
Bureau Veritas	**BV**	France
DNV Maritime	**DNV**	Germany
Korean Register	**KR**	Korea
Lloyds Register	**LR**	UK
Registro Italiano Navale	**RINA**	Italy
Russian Maritime Register of Shipping	**RS**	Russia

© Innomotics 2024

Innomotics DP application-specific motors - Marine motors

Overview

Type test (type approval)

All 1LE1, 1LE5, 1MB1, 1PC1, 1PC3, 1PC4 motors are manufactured and type tested in accordance with the regulations set up by the following international classification societies:

_ ABS (American Bureau of Shipping)

_ BV (Bureau Veritas, France)

_ DNV Maritime

_ KR (Korean Register of Shipping)

_ LR (Lloyds Register of Shipping)

_ Registro Italiano Navale (RINA)

_ Russian Maritime Register of Shipping (RS)

Special versions that differ from the range defined in the catalog are possible on request.

Benefits

The marine motors offer the user a number of advantages and benefits:

_ Cast-iron versions can be supplied for corrosive atmospheres especially for high humidity levels and salty air

_ Increased corrosion protection using specially designed paint finishes is available

_ Certified marine motors can be supplied for use in areas to be protected against explosion (hazardous zones)

_ Due to the existing type test, individual acceptance test in power ranges below the power limits defined by the classification societies is not required which means short delivery times

_ In depth know-how regarding customer requirements

_ Worldwide service network with 24 hour service hotline for motors and converters

© Innomotics 2024

Innomotics DP application-specific motors - Marine motors

Application

Our type tested marine motors are specially designed for use on board ship below deck and for the offshore industry:

- Applications on ships as main and auxiliary drives below deck, e.g.:
  - Fans (air conditioning systems, refrigeration systems)
  - Pumps (for fire-extinguishing water, fuels, oils)
  - Winches (anchor winches, warping winches, lifting gear)
  - Compressors
  - Bow thruster drives
  - Ex motors for hazardous zones
- Application in the offshore industry
  - Coastal areas, e.g. oil rigs, drilling ships

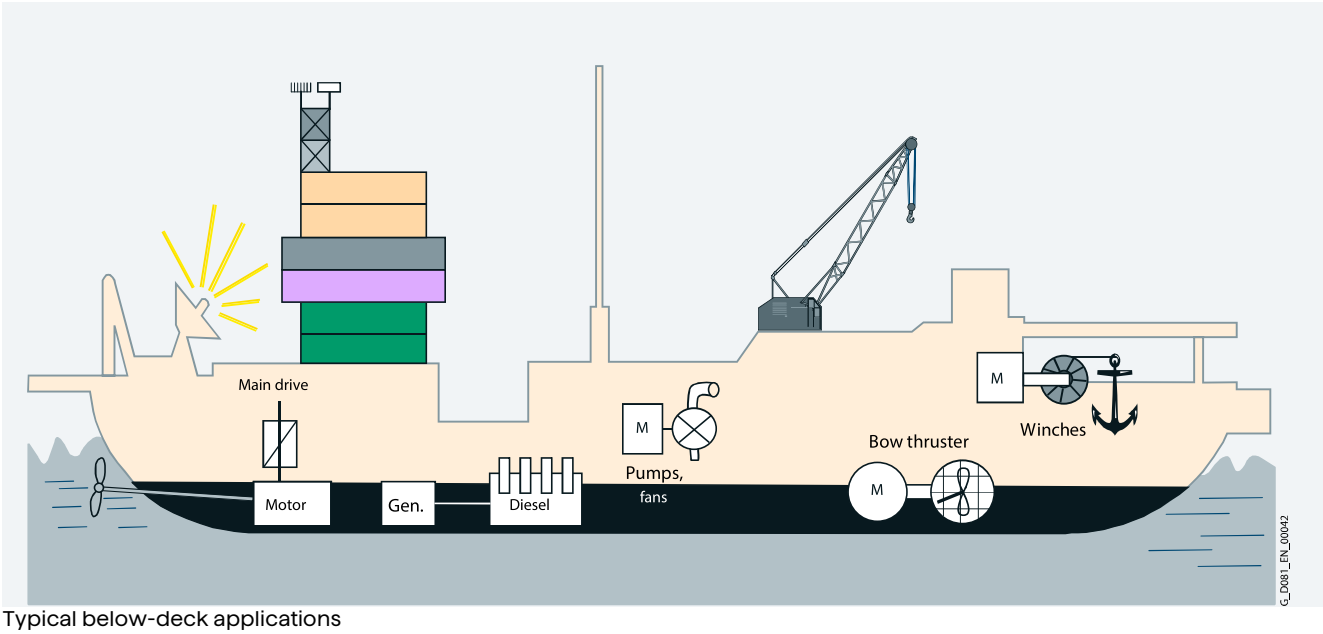

Typical below-deck applications

Technical specifications

Housing design

Motors can be supplied depending on the motor series in a corrosion-resistant aluminum housing or in a rugged low-vibration cast-iron version.

Motor connection

Cable glands are not included in the standard scope of supply with the exception of explosion-protected motors (see "Special versions").

All marine motors generally have an external grounding terminal.

Mountings (rotary pulse encoder, separately driven fan, brake)

Brakes, encoders and separately driven fans from our basic series (1LE, 1MB) are accepted as mountings without a separate certificate from the marine classification societies by the following: LR, RINA, RS, DNV, ABS and KR.

However, BV always demands separate certification for encoders. For this reason, 1LE1, 1MB1, 1PC1 and 1PC3 motors for BV can only be supplied in the "prepared for encoder mounting" condition. In this instance, the customer must bear responsibility for purchasing and installing a suitable encoder. With respect to brakes and separately driven fans, BV will also accept Innomotics standard components.

Fan / fan cover

Fans and fan covers are made from the same materials as components from the basic series. BV stipulates that these components must be made of metal, and they are automatically supplied in this material when order code **E31** is specified.

© Innomotics 2024

Innomotics DP application-specific motors - Marine motors

Technical specifications

Specifications of the individual classification societies with order codes (options) for motors in frame sizes 71M - 315 L

Classification society	Coolant temperature CT	Admissible temperature rise limit according to the classification society		Rated power limit for individual acceptance test for essential service drive	Rated power limit for construction supervision for essential service drive	Order codes for surface-cooled motors up to frame size 315 L with type test certificate
		Temperature class				
		130 (B)	155 (F)			
	°C	K	K	kW	kW	
LR	45	70	95	≥ 100	≥ 100	E21
BV	45	75	100	≥ 100	–	E31
DNV	45	75	100	≥ 300	–	E51
ABS	50	70	95	≥ 100 [1)]	–	E52
RINA	45	75	100	≥ 100	–	E41
RS	45	75	95	≥ 20	–	E46
KR	45	75	95	≥ 7.5	–	E54

Type test certificates

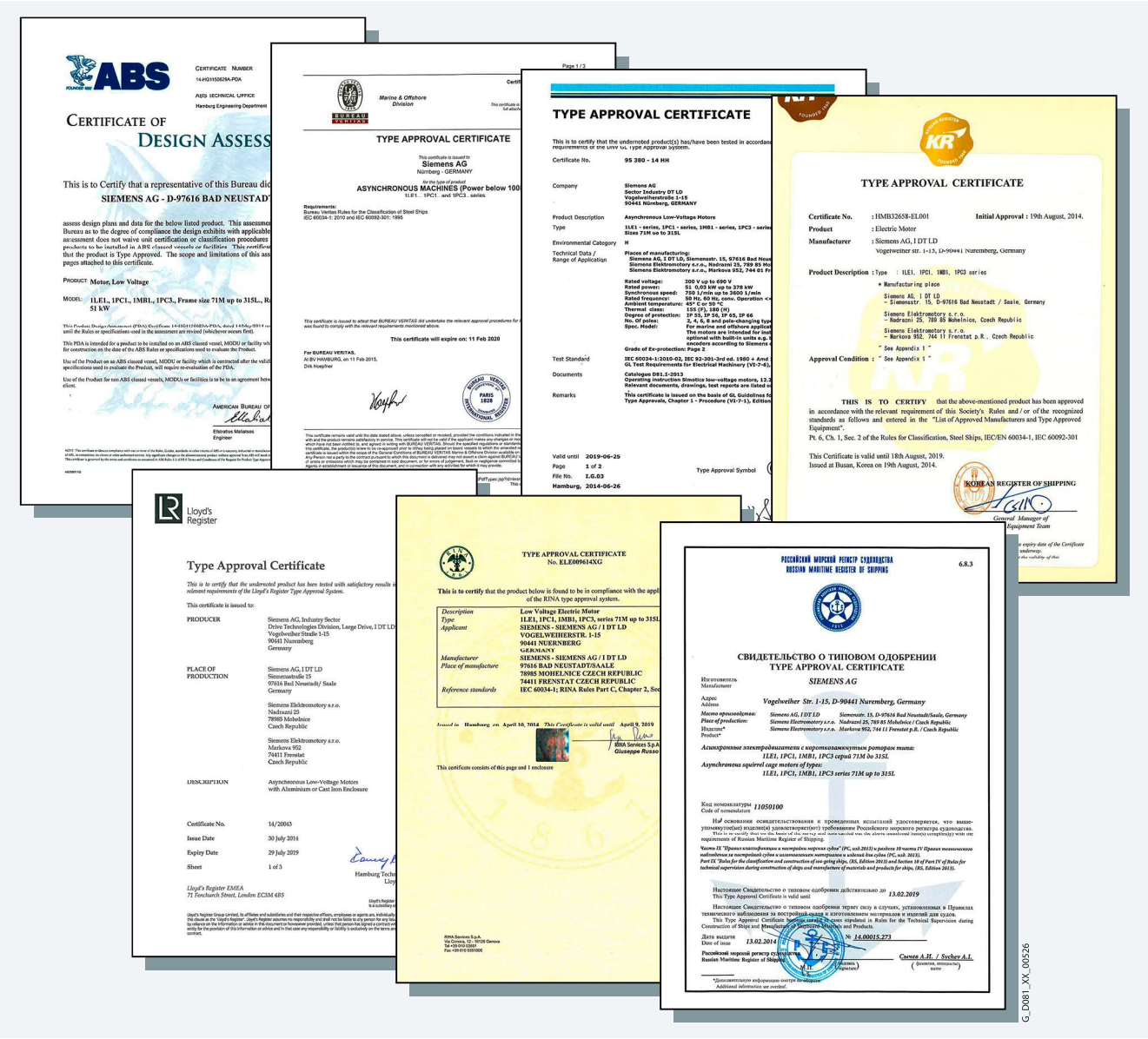

[1)] Required for all power ranges for ATEX compliance.

© Innomotics 2024

Technical specifications

Temperature class and coolant temperature

Innomotics GP/SD standard motors and Innomotics XP explosion-proof motors up to frame size 355

In general, marine motors are designed for a coolant temperature CT 45 °C in temperature class 155 (F) – used according to 155 (F) – with thermal reserve. When motors are used according to temperature class 130 (B) (order code **N05**), derating is required. For standard motors up to frame size 315 L, the derating is approx. 4 % (for order codes **E52** and **E21** approx. 8 %).

1MB1 motors in Zones 2, 21 and 22 are designed for temperature class 155 (F) – used according to temperature class 130 (B) – with derating of approx. 4 % (with order code **E52** approx. 8 %). Motors with increased power in temperature class 155 (F) – used according to temperature class 155 (F) – are also derated by approx. 4 % (with order code **E52** and **E21** approx. 8 %). If temperature class 155 (F) is to be used according to 130 (B), further derating of approximately 10 % is required.

Coolant temperatures that exceed CT 45 °C require derating in accordance with the following table:

	Coolant temperature CT			
	45 °C	50 °C	55 °C	60 °C
Temperature class 155 (F) used according to 155 (F)				
Derating factor for line operation	1.00	0.96	0.92	0.87
Temperature class 155 (F) used according to 130 (B)				
Derating factor for line operation	0.90	0.86	0.83	0.78

More detailed information is available on request.

Rating plate and inspection certificate

The rating plate indicates the relevant classification society and the associated coolant temperature

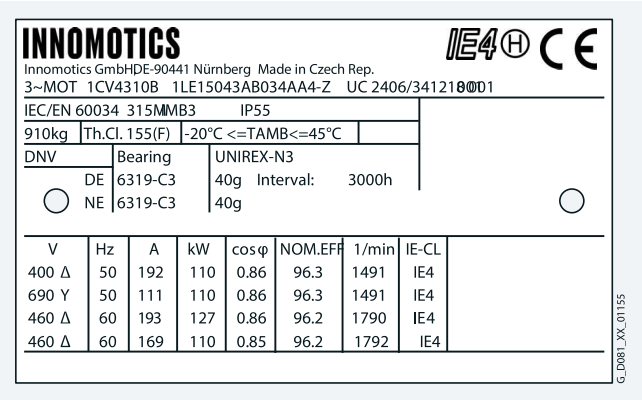

Rating plate for a marine motor according to DNV

Degree of protection

The protection classes applicable here are specified in the catalog sections for basic series 1LE1/1LE5/1MB1/1MB5/1PC1. With IP56, icing must be avoided.

Winding and motor protection

For monitoring the winding and bearings, the motors can be equipped with PTC thermistors, temperature sensors and resistance thermometers. Anti-condensation heaters can also be fitted to the marine motors to prevent condensation building up on the winding.

Paint finish

The standard paint finish is suitable for indoor installations or outdoor installations which are roof-protected against weathering.

When installing the standard motors in sea air or in rooms with permanent moisture, the special paint finish climate group "worldwide" according to IEC 60721-2-1 is appropriate, because this ensures a higher degree of corrosion protection. Most marine motors are finished in this special paint finish as standard (see "Special versions").

With particularly corrosive atmospheres, the sea-air-resistant special paint finish C4 (order code **S03**) or the offshore special paint finish C5 (order code **S04**) is recommended.

Special paint colors with the order codes **Y53** and **Y56** and increased film thicknesses are available on request.

Converter operation

The standard insulation of the motors is designed such that converter operation is permissible at line voltages up to $U_{rated} \leq 500$ V. The following limit values (voltage values are peak values) must be maintained: $\hat{U}_{phase\text{-}to\text{-}phase} \leq 1500$ V, $\hat{U}_{phase\text{-}to\text{-}ground} \leq 1100$ V, voltage rise times of $t_s > 0.1$ µs. Operation of motors at higher voltage peaks (e.g. on converters with controlled input, e.g. AFE, ALM) requires motors with higher insulation resistance.
Please inquire in this case.

During installation, the EMC guidelines must be complied with. This does not apply to motors in type of protection Ex eb according to IEC/EN 60079-2 that are certified only for line operation.

It is important to note the extent to which the converter used must also be acceptance tested by the marine classification authority.

© Innomotics 2024

Technical specifications

Recommended special versions

- Motor protection with with 1 or 3 PTC thermistors – for tripping (2 terminals) – 15th position of the Article No. **B**
- Installation of Pt100 resistance thermometers for winding temperature monitoring – 16th position of the Article No. **"H"**
- Especially for the motor series 1LE5: Installation of 2 Pt100 resistance thermometers in basic circuit for rolling-contact bearings – order code **Q72**
- Anti-condensation heating for 230 V – order code **Q02**
- Anti-condensation heating for 115 V – order code **Q03**
- IP56 degree of protection for protection against harmful dust deposits, protection against water jets from any direction – order code **H22**
- IP65 degree of protection for complete protection against dust deposits, protection against water jets from any direction – order code **H20**
- Special bearing for drive-end (DE) and non-drive-end (NDE), bearing size 63 – order code **L25**, for non-standard motors on request
- Metal external fan for self-ventilated motors – order codes **F74** and **F76** (standard with order code **E31**)

Additional notes

Order information

The fees levied by the classification societies for individual acceptance testing are included in order code **B10** for motor types 1LE1, 1LE5, 1PC5, 1MB1, 1PC1 and 1PC3.

When ordering, add the supplement **-Z** to the Article No. and state details in plain text if required.

For information about other special versions, refer to the appropriate sections under "Innomotics GP/SD 1LE1/1PC1 standard motors" and "Innomotics XP 1MB1 explosion-protected motors".

In addition to this, for marine motors, the following special versions are the "Standard version" and therefore included in the order codes for the basic marine version.

Standard version:

Designation	Order code
Inspection certificate 3.1 in accordance with EN 10204 Note: The delivery time for the manufacturer's test certificate may differ from the delivery time for the motor.	**B02**
External grounding terminal	**H04**

Ordering example

Selection criteria	Requirement	Structure of the Article No.
Motor type	Innomotics SD Basic Line, efficiency class IE3 Premium Efficiency, IP55 degree of protection, IM B3 type of construction, without winding protection, terminal box at top	**1LE1503**
No. of poles, speed, rated power	4-pole, 1500 rpm, 55 kW	**1LE1503-2CB2**
Voltage, frequency	400 V∆/690 VY, 50 Hz	**1LE1503-2CB23-4**
Type of construction	IM B3	**1LE1503-2CB23-4A**
Motor protection	1 or 3 PTC thermistors – for tripping (2 terminals)	**1LE1503-2CB23-4AB**
Terminal box position	Terminal box right	**1LE1503-2CB23-4AB5**
Paint finish	Paint finish in "Brilliant blue" RAL 5007	**1LE1503-2CB23-4AB5-Z Y53** Plain text: **RAL5007**
Marine version	Drive for "Essential Services" with type test certificate according to **DNV Maritime** with coolant temperature CT 45 °C	**1LE1503-2CB23-4AB5-Z Y53+E51** Plain text: **RAL5007**
	Individual acceptance (by marine classification society)	**1LE1503-2CB23-4AB5-Z Y53+E51+B10** Plain text: **RAL5007**
Motor order		
	Type test with temperature-rise run for horizontal motors, with acceptance	**1LE1503-2CB23-4AB5-Z Y53+E51+B10+B83** Plain text: **RAL5007**

The ordering example is valid for an order quantity of 1 item. For larger order quantities, a type test with heat run (order code **B83**) has only to be ordered for one motor.
It is not necessary to specify order code **B83** for any further identical motors (included in the same order).
The order must be divided into two order items; see "Example for 5 identical motors".

Example for 5 identical motors

Order item	Quantity in units	Article No.
1	1	**1LE1503-2CB23-4AB5-Z Z=Y53+E51+B10+B83** Plain text: **RAL 5007**
2	4	**1LE1503-2CB23-4AB5-Z Z=Y53+E51+B10** Plain text: **RAL 5007**

© Innomotics 2024

Innomotics DP application-specific motors - Marine motors

Selection and ordering data

Special versions	Additional identification code **-Z** with order code and plain text if required	Frame size 63	71	80	90	100	112	132	160	180	200	Motor version	
						1LE1004						IEC	IE4
				1LE1003									IE3
		1LE1001											IE2
		1LE1002											IE1
				1LE1023								EagleLine	NPE (NEMA)
					1LE1021								NEE (NEMA)
						1LE1011						Pole-changing	
1LE10 . . - . . . . . - . . . . -Z	Order code					1LE1012							
Marine version – Basic version													
With type test certificate according to Lloyds Register (LR), CT 45 °C, temperature class 155 (F), utilized according to 155 (F)	**E21**	✓	✓	✓	✓	✓	✓	✓	✓	✓	✓		
With type test certificate according to Bureau Veritas (BV), CT 45 °C, temperature class 155 (F), utilized according to 155 (F)	**E31**	✓	✓	✓	✓	✓	✓	✓	✓	✓	✓		
With type test certificate according to Registro Italiano Navale (RINA), CT 45 °C, temperature class 155 (F), utilized according to 155 (F)	**E41**	✓	✓	✓	✓	✓	✓	✓	✓	✓	✓		
With type test certificate according to Russian Maritime Register (RS), CT 45 °C, temperature class 155 (F), utilized according to 155 (F)	**E46**	✓	✓	✓	✓	✓	✓	✓	✓	✓	✓		
With type test certificate according to DNV Maritime, CT 45 °C, temperature class 155 (F), utilized according to 155 (F)	**E51**	✓	✓	✓	✓	✓	✓	✓	✓	✓	✓		
With type test certificate according to American Bureau of Shipping (ABS), CT 50 °C, temperature class 155 (F), utilized according to 155 (F)	**E52**	✓	✓	✓	✓	✓	✓	✓	✓	✓	✓		
With type test certificate according to Korean Register of Shipping (KR), CT 45 °C, temperature class 155 (F), utilized according to 155 (F)	**E54**	✓	✓	✓	✓	✓	✓	✓	✓	✓	✓		
Marine version – Acceptance/certification													
Individual acceptance by marine classification society	**B10**	–	–	✓	✓	✓	✓	✓	✓	✓	✓		
Type test with heat run for horizontal motors, with acceptance	**B83**	–	✓	✓	✓	✓	✓	✓	✓	✓	✓		

✓ With additional charge
– Not possible

© Innomotics 2024

Innomotics DP application-specific motors - Marine motors

Cast-iron series 1LE15/1LE16 Basic/Performance Line

Selection and ordering data

Special versions	Additional identification code **-Z** with order code and plain text if required	Frame size													Motor version	
		71	**80**	**90**	**100**	**112**	**132**	**160**	**180**	**200**	**225**	**250**	**280**	**315**		
					1LE1504 Basic Line										IEC	IE4
					1LE1604 Performance Line											
		1LE1503 Basic Line														IE3
					1LE1603 Performance Line											
					1LE1583											
		1LE1501 Basic Line														IE2
					1LE1601 Performance Line											
		1LE1523 Basic Line													Eagle Line	NPE (NEMA)
					1LE1623 Performance Line											
1LE1 . . . - . . . . . - . . . . -Z	Order code				**1LE1521 Basic Line**											NEE (NEMA)
Marine version – Basic version																
With type test certificate according to Lloyds Register (LR), CT 45 °C, temperature class 155 (F), utilized according to 155 (F)	**E21**	✓	✓	✓	✓	✓	✓	✓	✓	✓	✓	✓	✓	✓		
With type test certificate according to Bureau Veritas (BV), CT 45 °C, temperature class 155 (F), utilized according to 155 (F)	**E31**	✓	✓	✓	✓	✓	✓	✓	✓	✓	✓	✓	✓	✓		
With type test certificate according to Registro Italiano Navale (RINA), CT 45 °C, temperature class 155 (F), utilized according to 155 (F)	**E41**	✓	✓	✓	✓	✓	✓	✓	✓	✓	✓	✓	✓	✓		
With type test certificate according to Russian Maritime Register (RS), CT 45 °C, temperature class 155 (F), utilized according to 155 (F)	**E46**	✓	✓	✓	✓	✓	✓	✓	✓	✓	✓	✓	✓	✓		
With type test certificate according to DNV Maritime, CT 45 °C, temperature class 155 (F), utilized according to 155 (F)	**E51**	✓	✓	✓	✓	✓	✓	✓	✓	✓	✓	✓	✓	✓		
With type test certificate according to American Bureau of Shipping (ABS), CT 50 °C, temperature class 155 (F), utilized according to 155 (F)	**E52**	✓	✓	✓	✓	✓	✓	✓	✓	✓	✓	✓	✓	✓		
With type test certificate according to Korean Register of Shipping (KR), CT 45 °C, temperature class 155 (F), utilized according to 155 (F)	**E54**	✓	✓	✓	✓	✓	✓	✓	✓	✓	✓	✓	✓	✓		
Marine version – Acceptance/certification																
Individual acceptance by marine classification society	**B10**	✓	✓	✓	✓	✓	✓	✓	✓	✓	✓	✓	✓	✓		
Type test with heat run for horizontal motors, with acceptance	**B83**	✓	✓	✓	✓	✓	✓	✓	✓	✓	✓	✓	✓	✓		

✓ With additional charge

© Innomotics 2024

Innomotics DP application-specific motors - Marine motors

Selection and ordering data

Special versions	Additional identification code **-Z** with order code and plain text if required	Frame size				Motor version	
		250	**280**	**315**	**355**		
		1LE55.4 Basic Line				IEC	IE4
				1LE56.4 Performance Line			
				1LE55.3 Basic Line			IE3
1LE5 . . . - . . . . . - . . . . -Z	Order code			**1LE56.3 Performance Line**			
Marine version – Basic version							
With type test certificate according to Lloyds Register (LR), CT 45 °C, temperature class 155 (F), utilized according to 155 (F)	**E21**	–	✓	✓	✓		
With type test certificate according to Bureau Veritas (BV), CT 45 °C, temperature class 155 (F), utilized according to 155 (F)	**E31**	–	✓	✓	✓		
With type test certificate according to Registro Italiano Navale (RINA), CT 45 °C, temperature class 155 (F), utilized according to 155 (F)	**E41**	–	✓	✓	✓		
With type test certificate according to Russian Maritime Register (RS), CT 45 °C, temperature class 155 (F), utilized according to 155 (F)	**E46**	–	–	✓	✓		
With type test certificate according to DNV Maritime, CT 45 °C, temperature class 155 (F), utilized according to 155 (F)	**E51**	–	✓	✓	✓		
With type test certificate according to American Bureau of Shipping (ABS), CT 50 °C, temperature class 155 (F), utilized according to 155 (F)	**E52**	–	✓	✓	✓		
With type test certificate according to Korean Register of Shipping (KR), CT 45 °C, temperature class 155 (F), utilized according to 155 (F)	**E54**	–	✓	✓	–		
Marine version – Acceptance/certification							
Individual acceptance by marine classification society	**B10**	–	✓	✓	✓		
Type test with heat run for horizontal motors, without acceptance	**B82**	✓	✓	✓	✓		
Type test with heat run for horizontal motors, with acceptance	**B83**	–	✓	✓	✓		

✓ With additional charge
– Not possible

© Innomotics 2024

Innomotics DP application-specific motors - Marine motors

Aluminum series 1MB10, cast-iron series 1MB15/1MB16/1MB55

Selection and ordering data

Special versions	Additional identification code **-Z** with order code and plain text if required	Frame size														Motor version	
		71	**80**	**90**	**100**	**112**	**132**	**160**	**180**	**200**	**225**	**250**	**280**	**315**	**355**		
Aluminum series			**1MB10.3**													IEC	IE3
			1MB10.1														IE2
					1MB10.2												IE1
Cast-iron series		**1MB15.3 Basic Line**															IE3
					1MB16.3 Performance Line												
		1MB1553															
												1MB5553					
		1MB15.1 Basic Line															IE2
1MB . . . . - . . . . . - . . . . -Z	Order code				**1MB16.1 Performance Line**												
Marine version – Basic version																	
With type test certificate according to Lloyds Register (LR), CT 45 °C, temperature class 155 (F), utilized according to 155 (F)	**E21**	✓	✓	✓	✓	✓	✓	✓	✓	✓	✓	✓	✓	✓	✓		
With type test certificate according to Bureau Veritas (BV), CT 45 °C, temperature class 155 (F), utilized according to 155 (F)	**E31**	✓	✓	✓	✓	✓	✓	✓	✓	✓	✓	✓	✓	✓	✓		
With type test certificate according to Registro Italiano Navale (RINA), CT 45 °C, temperature class 155 (F), utilized according to 155 (F)	**E41**	✓	✓	✓	✓	✓	✓	✓	✓	✓	✓	✓	✓	✓	✓		
With type test certificate according to Russian Maritime Register (RS), CT 45 °C, temperature class 155 (F), utilized according to 155 (F)	**E46**	✓	✓	✓	✓	✓	✓	✓	✓	✓	✓	✓	✓	✓	✓		
With type test certificate according to DNV Maritime, CT 45 °C, temperature class 155 (F), utilized according to 155 (F)	**E51**	✓	✓	✓	✓	✓	✓	✓	✓	✓	✓	✓	✓	✓	✓		
With type test certificate according to American Bureau of Shipping (ABS), CT 50 °C, temperature class 155 (F), utilized according to 155 (F)	**E52**	✓	✓	✓	✓	✓	✓	✓	✓	✓	✓	✓	✓	✓	✓		
With type test certificate according to Korean Register of Shipping (KR), CT 45 °C, temperature class 155 (F), utilized according to 155 (F)	**E54**	✓	✓	✓	✓	✓	✓	✓	✓	✓	✓	✓	✓	✓	✓		
Marine version – Acceptance/certification																	
Individual acceptance by marine classification society	**B10**	✓	✓	✓	✓	✓	✓	✓	✓	✓	✓	✓	✓	✓	✓		
Type test with heat run for horizontal motors, with acceptance	**B83**	✓	✓	✓	✓	✓	✓	✓	✓	✓	✓	✓	✓	✓	✓		

✓ With additional charge

© Innomotics 2024

© Innomotics 2024

Appendix

© Innomotics 2024

8

© Innomotics 2024

© Innomotics 2024

8 Appendix

8/2 Innomotics Customer Services

8/3 Innomotics Customer Services – Portfolio overview

8/4 Tools and engineering

8/4 Innomotics Evaluate energy efficiency tool

8/5 SIPLUS CMS Condition Monitoring Systems for the continuous condition monitoring of motors

8/6 Index of order codes

8/14 Metal surcharges

8/14 Explanation of the raw material/metal surcharges

8/15 Explanation of the raw material/metal surcharges for dysprosium and neodym (rare earths)

8/16 Values of the metal factor

© Innomotics 2024

Overview

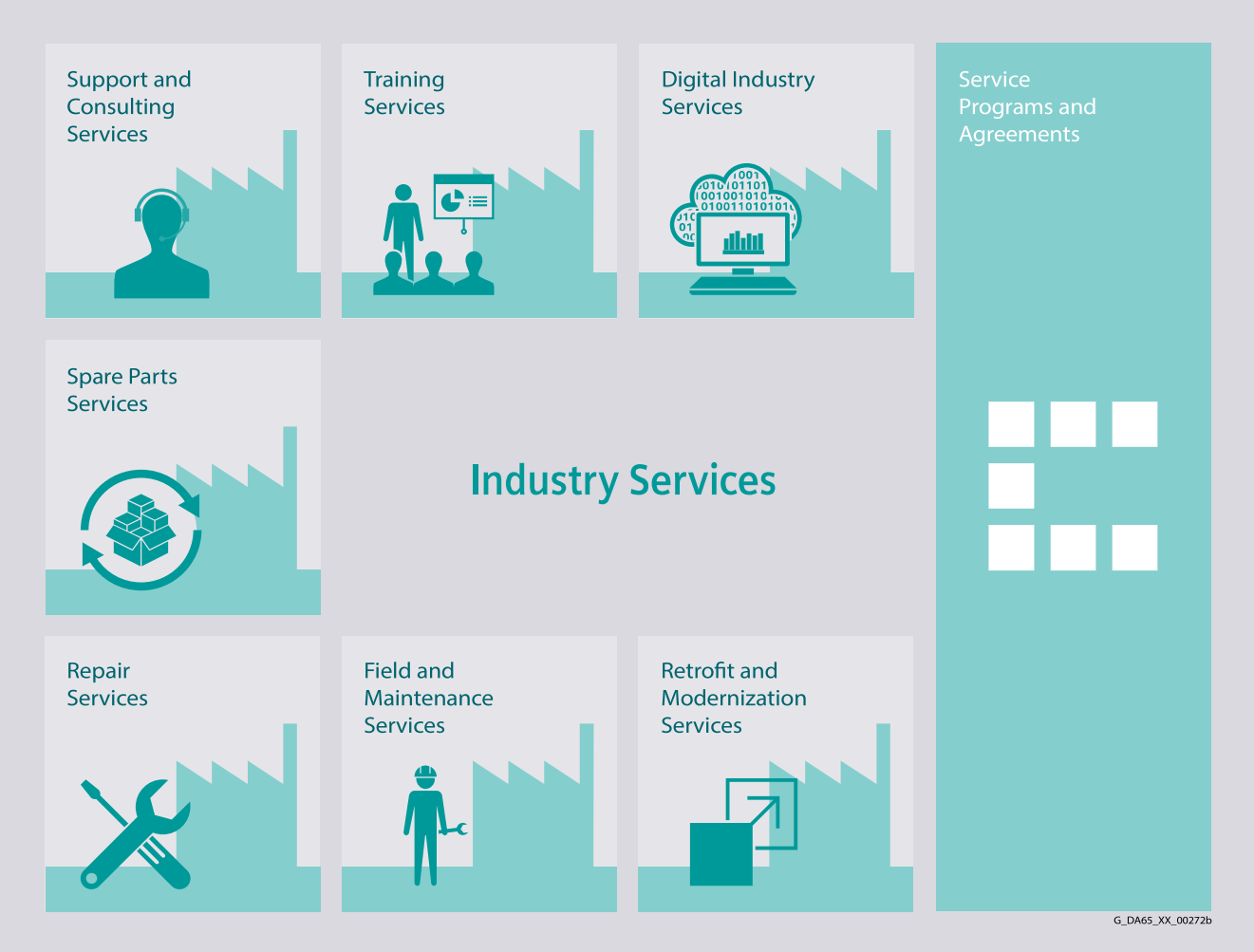

Keep your business running and shaping your digital future – with Customer Services for Innomotics

Optimizing the productivity of your equipment and operations can be a challenge, especially with constantly changing market conditions. Working with our service experts makes it easier. We understand your industry's unique processes and provide the services needed so that you can better achieve your business goals.

You can count on us to maximize your uptime and minimize your downtime, increasing your operations' productivity and reliability. When your operations have to be changed quickly to meet a new demand or business opportunity, our services give you the flexibility to adapt.

We assist in keeping your operations as energy and resource efficient as possible and reducing your total cost of ownership. As a trendsetter, we ensure that you can capitalize on the opportunities of digitalization and by applying data analytics to enhance decision making: You can be sure that your plant reaches its full potential and retains this over the longer life-span.

You can rely on our highly dedicated team of engineers, technicians and specialists to deliver the services you need – safely, professionally and in compliance with all regulations. We are there for you, where you need us, when you need us.

innomotics.com/services

© Innomotics 2024

Overview

Two service packages from our digital Inspire IQ range provide you with optimum support for your work. The first package **Rapid Response**, is all about getting your devices up and running again as quickly as possible. The second, **Guided Supervision**, is a service package specifically for the challenges of continuous monitoring.

Training Services are geared entirely towards offering our know-how as a manufacturer didactically concentrated to the industry and expanding the competence of your employees in handling the entire spectrum of Innomotics products. This ranges from basic skills training courses to specialized training for advanced technical skills.

Benefit from our wide range of **Support and Consulting Services**: Our Innomotics portal offers you comprehensive information, application examples, FAQs and support request options at portal.innomotics.com. This also comprises Technical Support and Diagnostics, including advice and answers to inquiries about functionality, application and fault clearance.

Spare Parts Services means optimum system availability in two ways: fast delivery of original spare parts for up to ten years, with optimized logistics processes - and preventive spare parts provisioning at the customer's premises through coordinated spare parts packages for individual products, custom-assembled drive components and entire integrated drive trains.

We offer **Repair Services** with specialized service technicians on site and in regional repair centers to quickly restore the functionality of faulty devices. Extended repair services are also available, including additional diagnostic and repair measures as well as emergency services.

As part of **Field and Maintenance Services**, our global network of specialists offers you high-quality maintenance services and optimized commissioning times. Maximize the availability of your systems by offering regular inspections and "health checks" and optimize your production processes.

Use **Retrofit and Upgrade Services** to extend the service life of your machines and plants. Optimize the availability, reliability and energy efficiency of your installed motors and drives by retrofitting existing products and systems. Your benefit: Optimized performance, higher productivity and stable production processes with highly available drives.

The **Service Agreements** give you the opportunity to bundle a variety of services in a single annual or multi-year contract. You can select these individually to match your requirements or fill gaps in your organization's maintenance capacities. Programs and agreements can be contracted on a KPI-based and/or performance-based basis.

© Innomotics 2024

Appendix

Innomotics Evaluate energy efficiency tool

Overview

The Innomotics Evaluate energy efficiency tool supports you in determining your energy saving potential and payback times based on your individual conditions of use. This practical tool helps to make informed decisions regarding investments in our energy-efficient technologies.

With Innomotics Evaluate, you can compare drive systems and relevant drive component parameters in a graphical interface. Our tool offers numerous comparison possibilities for different control types and comprehensive product combinations for drive solutions for pump and fan applications. Our product portfolio includes Innomotics motors and SINAMICS converters as well as SIRIUS controls, providing you with a comprehensive range of comparison possibilities tailored to your individual requirements.

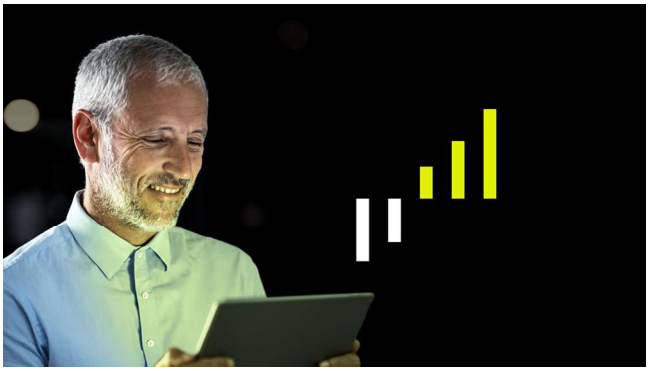

Innomotics Evaluate offers numerous comparison scenarios:

- Comparison of drive systems for pump and fan applications in the power range from 0.55 kW to 5,500 kW for
  - Reactor control (fixed speed; motor and switchgear)
  - Bypass control (fixed speed; motor and switchgear)
  - Speed control (variable speed; motor and converter)
- Comparison and evaluation of standard motors (incl. Ignition protection motors) in different energy efficiency classes

Innomotics Evaluate supports the evaluation of different product and system comparisons by:

- Displaying the potential savings for energy and energy costs as well as CO_2 emissions
- Estimation of the amortization time
- Estimation of the individual total lifecycle costs
- Representation of the system power losses according to IEC 61800-9-2 for full load and partial load
- Direct comparison of Innomotics drives with the reference Power Drive System (PDS) described in IEC 61800-9-2

Access to the Innomotics Evaluate energy efficiency tool

Innomotics Evaluate can be accessed without the need for registration or logging in:
evaluate.innomotics.com/en

More information

For more information about the amortization calculator for energy-efficient drive systems, visit
evaluate.innomotics.com/en

More information about services for energy saving is available on the Internet at
innomotics.com/hub/en/future-in-motion/energy-transition

© Innomotics 2024

Overview

The SIPLUS CMS Condition Monitoring Systems continuously monitor the condition of wear-prone drive components, such as motors. Depending on the system, individual motors can be monitored as well as complete drive trains, or even the entire plant. IEPE sensors are used for acquisition of the motor vibrations for analysis, visualization and archiving by SIPLUS CMS. Information is supplied regularly and event-driven – even in remote operation. SIPLUS CMS can also be retrofitted.

More information on SIPLUS CMS is available on the Internet at www.siemens.com/siplus-cms

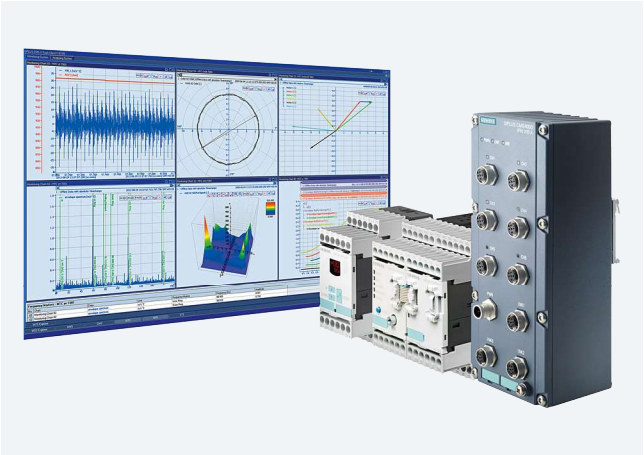

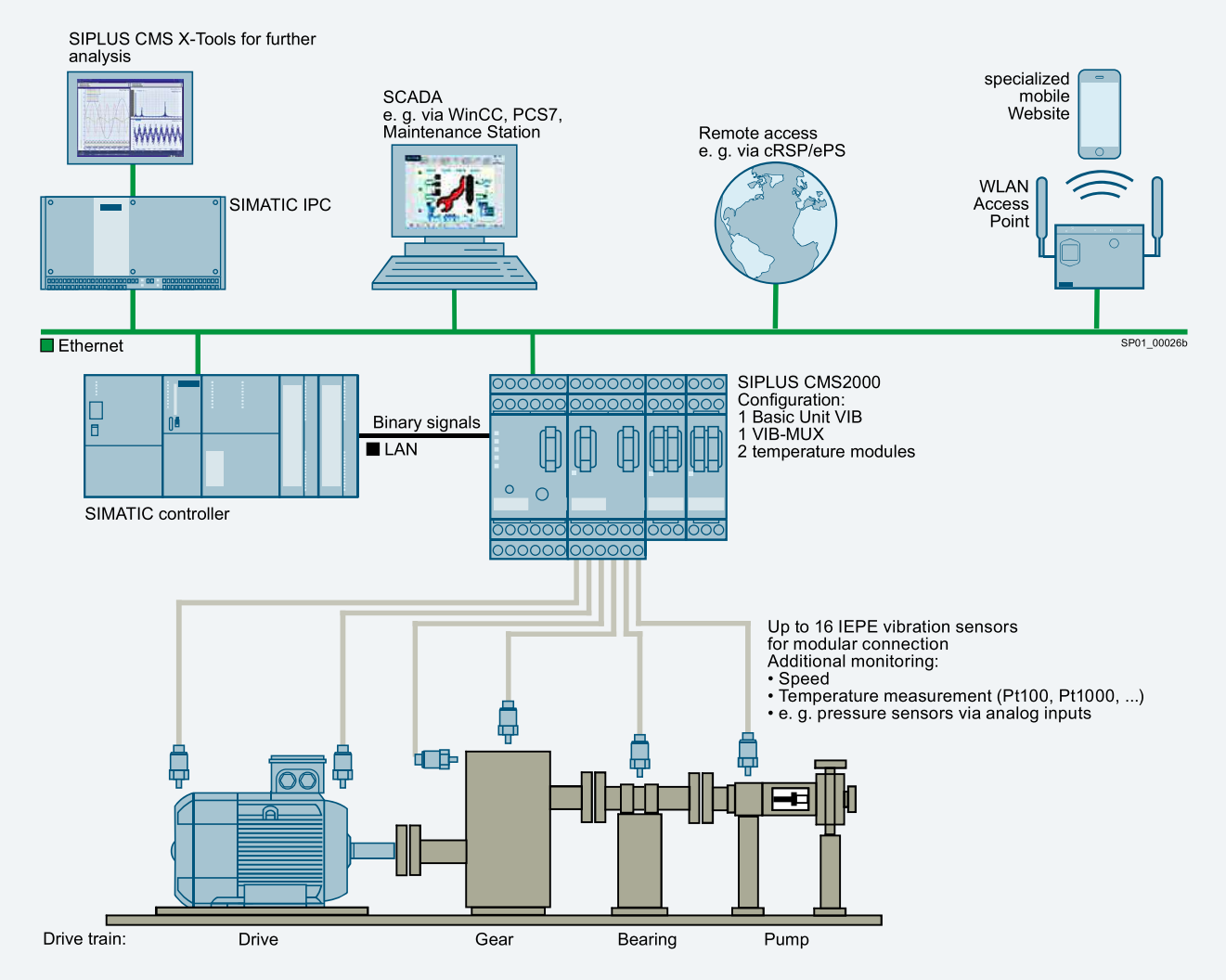

© Innomotics 2024

Appendix

Index of order codes

Order codes for motors 1FP, 1LE, 1MB, 1PC

All options are listed alphanumerically according to order codes in the following table.

Order code	Special versions	Category	For further information, see page
B01	A printed version of the safety notes in German/English and safety notes in the language of the country of use is supplied in each wire-lattice pallet	Packaging, safety notes, documentation and test certificates	3/130, 5/68, 5/125,
B02	Inspection certificate 3.1 in accordance with EN 10204		3/130, 3/138, 3/143, 4/41, 5/68, 5/72, 5/125, 5/129, 6/98, 6/102, 6/107, 6/111, 6/117
B07	Additional rating plate for voltage tolerance	Rating plate and additional rating plates	3/130, 3/137,4/40,
B10	Individual acceptance by marine classification society	Marine version – Acceptance/certification	7/9, 7/10, 7/11, 7/12
B13	Without "Made in manufacturing country" marking	Packaging, safety notes, documentation and test certificates	4/41,
B18	Removal of P60 60Hz data from rating plate	Rating plate and additional rating plates	4/40,
B30	Version additionally for dust Ex tc – Zone 22	Explosion-protected version	6/95, 6/99, 6/108, 6/113
B31	Version IIC with stamping of IIB		6/95, 6/99, 6/104, 6/108, 6/113
B32	Version additionally for dust Ex tb - Zone 21; IP65		6/104, 6/108,
B33	T1/T2 on rating plate		6/104,
B40	Version for converter operation in basic version with operating data SINAMICS G120 with PM240-2		6/95, 6/99, 6/113
B41	Version for converter operation in basic version with operating data SINAMICS S150		6/95, 6/99, 6/113
B43	Version for converter operation with power data on the PWM converter		6/95, 6/99, 6/108, 6/113
B44	Version for converter operation with power data on the PWM converter when used in accordance with temperature class 155 (F)		6/108,
B50	Starting curves (torque-speed and current-speed)	Packaging, safety notes, documentation and test certificates	4/41,
B51	Equivalent circuit diagram		4/41, 6/117
B52	Starting diagram (torque vs. speed and current vs. speed)		4/41, 6/117
B60	Document - Electrical datasheet		3/130, 3/138, 3/143, 4/41, 5/68, 5/72, 5/125, 5/129, 6/98, 6/102, 6/107, 6/111, 6/117
B61	Document - Order dimensional drawing		3/130, 3/138, 3/143, 4/41, 5/68, 5/72, 5/125, 5/129, 6/98, 6/102, 6/107, 6/111, 6/117
B65	Standard test (routine test) with acceptance		3/135, 3/143, 4/41, 5/72, 5/129, 6/102, 6/107, 6/111, 6/117
B67	Temperature test without acceptance		4/41, 6/117
B68	Temperature test with acceptance		4/41, 6/117
B71	Noise measurement without load with octave band analysis, without acceptance	Explosion-protected version	6/111,
B72	Noise measurement without load with octave band analysis, with acceptance		6/112,
B77	Remote acceptance	Packaging, safety notes, documentation and test certificates	3/138, 3/143, 4/41, 5/72, 5/129, 6/102, 6/107, 6/112, 6/117
B78	Hybrid acceptance		3/138, 3/143, 4/41, 5/72, 5/129, 6/102, 6/107, 6/112, 6/117
B80	Type test with heat run for vertical motors, with acceptance	Explosion-protected version	6/117
B81	Type test with heat run for horizontal motors, without acceptance		6/117
B81	Type test with heat run for horizontal motors, with acceptance	Packaging, safety notes, documentation and test certificates	7/11
B82	Type test with heat run for horizontal motors, with acceptance		3/138, 3/143, 4/41, 6/107, 6/112, 6/117
B83	Type test with heat run for horizontal motors, with acceptance		3/130, 3/138, 3/143, 4/41, 5/68, 5/72, 5/125, 5/129, 6/98, 6/102, 6/107, 6/112, 6/117
B83	Type test with heat run for horizontal motors, with acceptance	Marine version – Basic version	7/9, 7/10, 7/11, 7/12
B90	"Basic" documentation package	Packaging, safety notes, documentation and test certificates	3/130, 3/138, 4/41, 5/68, 5/72, 5/125, 5/129, 6/98, 6/103, 6/107, 6/112, 6/117
B91	"Advanced" documentation package		3/130, 3/138, 4/41, 5/68, 5/72, 5/125, 5/129, 6/98, 6/103, 6/107, 6/112, 6/117
B92	"Projects" documentation package		3/130, 3/138, 4/41, 5/68, 5/72, 5/125, 5/129, 6/98, 6/103, 6/107, 6/112, 6/117
B99	Wire-lattice pallet packaging		3/130, 5/68, 5/125, 6/98, 6/103, 6/112,
C02	VIK version	Versions in accordance with standards and specifications	3/125, 3/135, 4/29,6/95, 6/99, 6/104, 6/108, 6/113
C03	Chemstar chemiclal Industry		3/135, 4/38, 6/99, 6/104, 6/108,
C04	Chemstar Oil & Gas Industry		3/135, 4/38, 6/99, 6/104, 6/108,
C06	Performance Line Process industry		4/38,
D01	CCC China Compulsory Certification		3/128, 3/135,

© Innomotics 2024

Order code	Special versions	Category	For further information, see page
D02	Coolant temperature –50 to +40 °C	Coolant temperature and installation altitude	3/135, 3/142, 4/38, 5/71, 5/128,
D03	Coolant temperature -40 to +40 °C		3/128, 3/135, 3/142, 4/38, 5/67, 5/71, 5/124, 5/128, 6/96, 6/101, 6/105, 6/110, 6/115
D04	Coolant temperature –30 to +40 °C		3/128, 3/135, 3/142, 4/38, 5/67, 5/71, 5/124, 5/128,
D05	Coolant temperature –55 to +40 °C	Explosion-protected version	6/110,
D22	Motor without CE marking for export outside EEA (see EU Regulation 2019/1781)	Versions in accordance with standards and specifications	3/128, 3/135, 4/38, 6/96, 6/101, 6/110,
D23	Motor exclusively for use in transportation equipment for passenger and freight transportation corresponding to EVPG §1 dated February 27, 2008		3/128, 3/135, 4/38, 6/96, 6/101,
D30	Electrical according to NEMA MG1-12		3/128, 3/136, 4/38,
D31	Design according to UL with "Recognition Mark"		3/128, 3/136, 4/38,
D32	Ex certification for China	Explosion-protected version	6/96, 6/101, 6/110,
D33	KEA Korea Energy Efficiency Label	Versions in accordance with standards and specifications	3/128, 3/136,
D34	China Energy Efficiency Label		3/128, 3/136, 4/38, 6/97, 6/101, 6/110,
D35	Ex certificate EAC for the Eurasian Customs Union	Explosion-protected version	6/97, 6/101, 6/110,
D37	IECEx certification		6/97, 6/101, 6/105, 6/110, 6/115
D39	Version according to UL and CSA (Canadian regulation)	Versions in accordance with standards and specifications	5/67, 5/71, 5/124, 5/128,
D40	Canadian regulations (CSA)		3/128, 3/136, 4/38,
D41	NEMA Premium Efficient, North America version acc. to NEMA MG1, Table 12-12, incl. UL and CSA		3/128, 3/136, 4/38,
D47	TR CU product safety certificate EAC for Eurasian Customs Union		3/128, 3/136, 4/38, 5/67, 5/71, 5/124, 5/128,
D70	MEPS Australia		3/128, 3/136, 4/38, 6/97, 6/101, 6/110, 6/115
D72	BIS India (Indian standard IS 12615:2018)		3/129, 3/136, 4/39,
D73	SASO EER		3/129, 3/136, 4/39,
D75	Ex certification India (PESO)	Explosion-protected version	6/110,
D78	Ex certification UAE (ECAS Ex)		6/110,
E21	With type test certificate according to Lloyds Register (LR), CT 45 °C, temperature class 155 (F), utilized according to 155 (F)	Marine version – Basic version	7/9, 7/10, 7/11, 7/12
E31	With type test certificate according to Bureau Veritas (BV), CT 45 °C, temperature class 155 (F), utilized according to 155 (F)		7/9, 7/10, 7/11, 7/12
E41	With type test certificate according to Registro Italiano Navale (RINA), CT 45 °C, temperature class 155 (F), utilized according to 155 (F)		7/9, 7/10, 7/11, 7/12
E46	With type test certificate according to Russian Maritime Register (RS), CT 45 °C, temperature class 155 (F), utilized according to 155 (F)		7/9, 7/10, 7/11, 7/12
E51	With type test certificate according to DNV Maritime, CT 45 °C, temperature class 155 (F), utilized according to 155 (F)		7/9, 7/10, 7/11, 7/12
E52	With type test certificate according to American Bureau of Shipping (ABS), CT 50 °C, temperature class 155 (F), utilized according to 155 (F)		7/9, 7/10, 7/11, 7/12
E54	With type test certificate according to Korean Register of Shipping (KR), CT 45 °C, temperature class 155 (F), utilized according to 155 (F)		7/9, 7/10, 7/12
F01	Mounting of holding brake (standard assignment)	Modular technology – Basic versions	3/127, 3/133, 3/141, 4/36, 5/66, 5/70, 5/123, 5/127,
F04	Mounting of PRECIMA brake		3/127, 3/133, 3/141, 4/36, 5/66,
F10	Brake supply voltage 24 V DC	Modular technology – Additional versions	3/127, 3/133, 3/141, 4/36, 5/66, 5/70, 5/123, 5/127, 6/109,
F11	Brake supply voltage 230 V AC, 50/60 Hz		3/127, 3/133, 3/141, 4/36, 5/66, 5/70, 5/123, 5/127, 6/109,
F12	Brake supply voltage 400 V AC, 50/60 Hz		3/127, 3/133, 3/141, 4/36, 5/66, 5/70, 5/123, 5/127, 6/109,
F17	Brake supply voltage 180 V DC		3/127, 3/134, 3/141, 5/66, 5/70, 5/123, 5/127,
F18	Brake supply voltage 205 V DC		3/127, 3/134, 3/141, 5/66, 5/70, 5/123, 5/127,
F20	Mounting of brake in Ex db version	Explosion-protected version	6/110,
F40	Backstop, counterclockwise motion blocked, clockwise direction of rotation	Modular technology – Additional versions	3/134, 3/141, 4/36, 5/70,
F41	Backstop, clockwise motion blocked, counterclockwise direction of rotation		3/134, 3/141, 4/36, 5/70,
F50	Mechanical manual brake release with lever (no locking)		3/127, 3/134, 3/141, 4/36, 5/66, 5/70, 5/123, 5/127, 6/109,
F68	Metal fan made of brass	Explosion-protected version	6/111, 6/116
F70	Mounted separately driven fan	Modular technology – Basic versions	3/127, 3/133, 3/141, 4/36, 5/67, 5/72, 5/124, 5/129, 6/96, 6/101, 6/109, 6/115
F74	Sheet metal fan cover	Heating and ventilation	3/130, 3/137, 3/143, 4/40, 5/67, 5/72, 5/124, 5/129,
F75	Fan cover for textile industry		3/130, 5/67, 5/124,
F76	Metal external fan		3/130, 3/137, 3/143, 4/40, 5/67, 5/72, 5/124, 5/129, 6/97, 6/102, 6/106, 6/111,

© Innomotics 2024

Appendix

Index of order codes

Order code	Special versions	Category	For further information, see page
F77	Low-noise version for 2-pole motors with clockwise direction of rotation	Mechanical design and degrees of protection	3/128, 3/135, 3/142, 4/37, 6/96, 6/101, 6/105, 6/110, 6/115
F78	Low-noise version for 2-pole motors with counterclockwise direction of rotation		3/128, 3/135, 3/142, 4/37, 6/96, 6/101, 6/105, 6/110, 6/115
F90	Without external fan and without fan cover	Heating and ventilation	3/130, 3/137, 3/143, 4/40, 5/67, 5/124, 6/116
G03	Mounting of rotary pulse encoder HOG 86E	Special technology	3/127, 3/134, 3/141, 4/36, 5/66, 5/70, 5/123, 5/127,
G04	Mounting of LL 861 900 220 rotary pulse encoder		3/127, 3/134, 3/141, 4/36, 5/66, 5/70, 5/123, 5/127,
G05	Mounting of HOG 9 DN 1024 I rotary pulse encoder		3/127, 3/134, 3/141, 4/36, 5/66, 5/70, 5/123, 5/127,
G06	Mounting of HOG 10 D 1024 I rotary pulse encoder		3/127, 3/134, 3/141, 4/36, 5/66, 5/70, 5/123, 5/127,
G07	Mounting of POG 10 DN rotary pulse encoder (only in combination with separately driven fan or brake)		3/134, 3/141, 4/36, 5/70, 5/127,
G08	Mounting of POG 9 rotary pulse encoder (only in combination with separately driven fan or brake)		3/134, 3/141, 4/36, 5/70, 5/127,
G11	Mounting of Kübler Sendix 5020 HTL, 1024 I rotary pulse encoder	Modular technology – Basic versions	3/127, 3/133, 3/141, 4/36, 5/66, 5/70, 5/123, 5/127,
G12	Mounting of Kübler Sendix 5020 TTL, 1024 I rotary pulse encoder		3/127, 3/133, 3/141, 4/36, 5/66, 5/70, 5/123, 5/127,
G15	Mounting of HOG 10 DN 1024 I rotary pulse encoder, terminal box moisture protection	Special technology	3/134, 3/141, 4/36,
G16	Mounting of HOG 10 DN 1024 I rotary pulse encoder, terminal box dust protection		3/134, 3/141, 4/37,
G21	Mounting of Kübler Sendix 5834FS2 1024, SIL-2 rotary pulse encoder		3/127, 3/134, 3/141, 4/37, 5/66, 5/70, 5/123, 5/127,
G22	Mounting of Kübler Sendix 5834FS3 1024, SIL-3 rotary pulse encoder		3/127, 3/134, 3/141, 4/37, 5/66, 5/70, 5/123, 5/127,
G25	Mounting of HOGS100S-B76.626.01024.1 rotary pulse encoder		3/127, 3/134, 3/141, 4/37, 5/66, 5/70, 5/127,
G27	Mounting of LL FSI 862-184560-1024, SIL-2 rotary pulse encoder		3/127, 3/134, 3/141, 4/37, 5/66, 5/70, 5/127,
G30	Mounting of LL 841 (HTL); 1024 I explosion-protected rotary pulse encoder	Explosion-protected version	6/96, 6/101, 6/110, 6/115
G40	Prepared for mounted components, centering hole only	Mechanical design and degrees of protection	3/128, 3/135, 3/142, 4/37, 5/66, 5/71, 5/123, 5/128,
G41	Prepared for mountings with D12 shaft		3/128, 3/135, 3/142, 4/37, 5/66, 5/71, 5/123, 5/128,
G42	Prepared for mountings with D16 shaft		3/128, 3/135, 3/142, 4/37, 5/66, 5/71, 5/123, 5/128,
G43	Mechanical protection for encoder		3/128, 3/135, 3/142, 4/37, 5/66, 5/71, 5/123, 5/128, 6/96, 6/101, 6/115
G93	Mounting of rotary pulse encoder XSI 850 Overspeed	Special technology	3/128, 3/134, 3/141, 4/37,
G94	Mounting of rotary pulse encoder XHI 861 Overspeed		3/128, 3/134, 3/141, 4/37,
H00	Protective cover	Mechanical design and degrees of protection	3/128, 3/135, 3/142, 4/37, 5/67, 5/71, 5/123, 5/128, 6/96, 6/101, 6/105, 6/110, 6/115
H01	Screwed-on (instead of cast) feet		3/128, 3/135, 3/142, 4/37, 5/67, 5/71, 5/123, 5/128, 6/96, 6/101, 6/105,
H02	Vibration-proof version; vibration resistance to Class 3M4 according to IEC 60721-3-3:1994		3/128, 3/135, 3/142, 4/38, 5/67, 5/71, 5/123, 5/128, 6/96, 6/101, 6/105, 6/110, 6/115
H03	Condensation drainage holes		3/128, 3/135, 3/142, 5/67, 5/71, 5/123, 6/96, 6/101, 6/105, 6/115
H04	External grounding	Motor connection and terminal boxes	3/125, 3/131, 3/139, 5/65, 5/69, 5/122, 5/126,
H06	External screws, bolts and unpainted materials made of stainless steel (V4A)	Explosion-protected version	6/101, 6/105, 6/110,
H07	Rust-resistant screws (externally)	Mechanical design and degrees of protection	3/128, 3/135, 3/142, 4/37, 5/67, 5/71 5/123, 5/128, 6/96, 6/101, 6/105, 6/110, 6/115
H08	Terminal box on NDE	Motor connection and terminal boxes	3/125, 3/131, 3/139, 4/33, 5/65, 5/69 5/122, 5/126, 6/114
H09	Two terminal boxes on NDE		4/33, 6/114

© Innomotics 2024

Order code	Special versions	Category	For further information, see page
H10	Housing with screw mounting	Mechanical design and degrees of protection	3/128, 5/67,
H19	Degree of protection IP66		3/128, 3/135, 3/142, 4/37, 5/67, 5/71, 5/123, 5/128, 6/101, 6/105, 6/110, 6/115
H20	IP65 degree of protection		3/128, 3/135, 4/37, 5/67, 5/71, 5/123, 5/128, 6/96, 6/101, 6/105, 6/110, 6/115
H21	IP54 degree of protection		3/135, 4/38, 5/71, 5/128,
H22	IP56 degree of protection		3/128, 3/135, 3/142, 4/38, 5/67, 5/71, 5/123, 5/128, 6/96, 6/101, 6/105, 6/110, 6/115
H23	Drive-end seal for flange-mounted motors, oil-tight to 0.1 bar		3/128, 3/135, 3/142, 4/38, 5/67, 5/71, 5/123, 5/128, 6/96, 6/101, 6/105, 6/110, 6/115
H25	Sealing ring made of fluoroelastomer (FKM)		4/38, 6/115
H30	Adjustment screws for feet in horizontal installation	Explosion-protected version	6/101, 6/105, 6/110, 6/115
H70	Second external grounding	Motor connection and terminal boxes	3/131, 3/139, 4/33, 5/69, 5/126, 6/104, 6/108, 6/114
H90	Increased corrosion protection for external components	Mechanical design and degrees of protection	4/38, 6/115
L00	Vibration severity grade B	Balance and vibration severity	3/129, 3/136, 3/142, 4/39, 6/97, 6/102, 6/106, 6/110, 6/116
L01	Balancing without feather key		3/129, 3/136, 3/142, 4/39, 5/67, 5/71, 5/124, 5/128, 6/97, 6/102, 6/106, 6/110, 6/116
L02	Full-key balancing		3/129, 3/136, 3/142, 4/39, 5/67, 5/71, 5/124, 5/128, 6/97, 6/102, 6/106, 6/110, 6/116
L04	Shaft extension with standard dimensions, without feather keyway	Shaft and rotor	3/129, 3/137, 3/143, 4/39, 5/67, 5/71, 5/124, 5/128, 6/97, 6/102, 6/106, 6/111, 6/116
L05	Standard, cylindrical shaft extension (second shaft extension) NDE acc. to EN 50347		3/129, 3/137, 3/143, 4/39, 5/67, 5/71, 5/124, 5/128, 6/97, 6/102, 6/106, 6/111, 6/116
L06	Standard shaft made of stainless steel (e.g. 1.4021)		3/129, 3/137, 3/143, 4/39, 5/67, 5/71, 5/124, 5/128, 6/97, 6/102, 6/106, 6/111, 6/116
L07	Shaft extension run-out in accordance with IEC 60072-1 precision class		3/129, 3/137, 3/143, 4/39, 5/67, 5/71, 5/124, 5/128, 6/97, 6/102, 6/106, 6/111, 6/116
L08	Shaft extension run-out, concentricity and perpendicularity in accordance with IEC 60072-1 precision class for flange-mounted motors		3/129, 3/137, 3/143, 4/39, 5/67, 5/72, 5/124, 5/128, 6/97, 6/102, 6/106, 6/111, 6/116
L19	Regreasing device with M10 × 1 grease nipple according to DIN 71412-A	Bearings and lubrication	3/129, 3/136, 3/142, 4/39, 5/71, 5/128, 6/101, 6/105, 6/110, 6/116
L20	Located bearing DE		3/129, 3/136, 3/142, 4/39, 5/67, 5/71, 5/124, 5/128, 6/97, 6/101, 6/105, 6/110, 6/116
L21	Located bearing NDE		3/129, 3/136, 3/142, 4/39, 5/67, 5/71, 5/124, 5/128, 6/97, 6/101, 6/105, 6/110, 6/116
L22	Bearing design for increased cantilever forces		3/129, 3/136, 3/142, 4/39, 5/67, 5/71, 5/124, 5/128, 6/97, 6/101, 6/105, 6/110, 6/116
L23	Regreasing device		3/129, 3/136, 3/142, 5/67, 5/71, 5/124, 5/128, 6/97, 6/101, 6/105, 6/110,
L24	Hot bearing grease		4/39,
L25	Bearings reinforced at both ends for DE and NDE, bearing size 63		3/129, 3/136, 3/142, 4/39, 5/67, 5/71, 5/124, 5/128, 6/97, 6/101, 6/105, 6/116
L28	Reinforced bearings at both DE and NDE, DE bearing for increased cantilever forces		3/136, 3/142, 4/39, 5/71, 5/128, 6/106,
L30	Drainage for used grease		4/39, 6/116
L34	Bearing for high axial tension forces		3/129, 3/136, 3/142, 5/67, 5/71, 5/124,5/128, 6/102, 6/110
L35	Bearing for high axial tension and thrustforces	Explosion-protected version	6/110,
L50	Bearing insulation DE	Bearings and lubrication	3/136, 3/142, 4/39, 5/128, 6/106, 6/116
L51	Bearing insulation NDE		3/129, 3/136, 3/142, 4/39, 5/67, 5/71, 5/124, 5/128, 6/97, 6/102, 6/106, 6/110, 6/116
L52	Grounding brush for converter operation	Mechanical design and degrees of protection	3/135, 3/142, 4/38, 5/128,
L90	Version suitable for railways IC411, EN IEC 60349, without EN 45545, with external fan and fan cover in plastic		3/129,

© Innomotics 2024

Appendix

Index of order codes

Order code	Special versions	Category	For further information, see page
L91	Version suitable for railways IC411, EN IEC 60349, with EN 45545, with external fan and fan cover in metal	Versions in accordance with standards and specifications	3/129,
L92	Version suitable for railways IC418, EN IEC 60349, without EN 45545, without external fan and fan cover		3/129,
M01	Connected in star for dispatch	Motor connection and terminal boxes	3/125, 3/131, 3/139, 4/33, 5/65, 5/69, 5/122, 5/126, 6/95, 6/99, 6/104, 6/108, 6/114
M02	Connected in delta for dispatch		3/125, 3/131, 3/139, 4/33, 5/65, 5/69, 5/122, 5/126, 6/95, 6/99, 6/104, 6/108, 6/114
M10	Second rating plate, loose	Rating plate and additional rating plates	3/130, 3/137, 3/143, 4/40, 5/68, 5/72, 5/124, 5/129, 6/97, 6/102, 6/106, 6/111, 6/116
M11	Rating plate, stainless steel		3/130, 3/137, 3/143, 4/40, 5/68, 5/72, 5/124, 5/129, 6/97, 6/102, 6/106, 6/111,
N01	Temperature class 155 (F), utilized according to 155 (F), with service factor	Windings and insulation	3/126, 3/132, 3/140, 4/34,
N02	Temperature class 155 (F), utilized acc. to 155 (F), with increased power		3/126, 3/132, 3/140, 4/34,
N03	Temperature class 155 (F), utilized acc. to 155 (F), with increased coolant temperature		3/126, 3/132, 3/140, 4/34,
N05	Temperature class 155 (F), utilized acc. to 130 (B), coolant temperature 45 °C, derating approx. 4 %		3/126, 3/132, 3/140, 4/34, 6/95, 6/100, 6/104, 6/109, 6/114
N06	Temperature class 155 (F), utilized acc. to 130 (B), coolant temperature 50 °C, derating approx. 8 %		3/126, 3/132, 3/140, 4/34, 6/95, 6/100, 6/104, 6/109, 6/114
N07	Temperature class 155 (F), utilized acc. to 130 (B), coolant temperature 55 °C, derating approx. 13 %		3/126, 3/132, 3/140, 4/34, 6/95, 6/100, 6/104, 6/109, 6/114
N08	Temperature class 155 (F), utilized acc. to 130 (B), coolant temperature 60 °C, derating approx. 18 %		3/126, 3/132, 3/140, 4/35, 6/95, 6/100, 6/104, 6/109, 6/114
N10	Temperature class 180 (H)		3/126, 3/132, 3/140, 4/35,
N11	Temperature class 180 (H) at rated power and max. CT 60 °C		3/126, 3/132, 3/140, 4/35, 5/66, 5/69,
N30	Increased air humidity/temperature with 30 to 60 g water per m^3 of air		3/126, 3/132, 3/140, 4/35, 5/66, 5/69, 5/122, 5/126, 6/96, 6/100, 6/104, 6/109, 6/114
N31	Increased air humidity/temperature with 60 to 100 g water per m^3 of air		3/126, 3/132, 3/140, 4/35, 5/66, 5/69, 5/126, 6/96, 6/100, 6/104, 6/109, 6/114
Q01	Measuring nipple for SPM shock pulse measurement for bearing inspection	Bearings and lubrication	3/129, 3/136, 3/142, 4/39, 5/67, 5/71, 5/124, 5/128, 6/97, 6/102, 6/106, 6/110, 6/116
Q02	Anti-condensation heating for 230 V (2 terminals)	Heating and ventilation	3/130, 3/137, 3/143, 4/40, 5/67, 5/72, 5/124, 5/129, 6/97, 6/102, 6/106, 6/111, 6/116
Q03	Anti-condensation heating for 115 V (2 terminals)		3/130, 3/137, 3/143, 4/40, 5/68, 5/72, 5/124, 5/129, 6/97, 6/102, 6/106, 6/111, 6/116
Q04	Anti-condensation heating for 220 V (2 terminals)	Explosion-protected version	6/111,
Q06	Anti-condensation heating for 400 V (2 terminals)	Heating and ventilation	4/40, 6/116
Q11	1 or 3 PTC thermistors – for tripping (2 terminals)	Motor protection	3/125, 3/131, 3/139, 4/33, 5/65, 5/69, 5/122, 5/126, 6/95, 6/113
Q12	2 or 6 PTC thermistors – for alarm and tripping (4 terminals)		3/125, 3/131, 3/139, 4/33, 5/65, 5/69, 5/122, 5/126, 6/95, 6/113
Q21	3 NTC thermistors – for tripping (6 terminals)	Explosion-protected version	6/113
Q31	3 bimetal sensors (NC contacts) for tripping (2 terminals)	Motor protection	3/125, 3/131, 3/139, 4/33, 5/65, 5/69, 5/122, 5/126,
Q32	6 bimetal sensors (NC contacts) for alarm and tripping (4 terminals)		3/125, 3/131, 3/139, 4/33, 5/65, 5/69, 5/122, 5/126,
Q33	3 bimetal sensors (NC contacts) for tripping (6 terminals)		3/125, 3/131, 3/139, 4/33, 5/65, 5/69, 5/122, 5/126,
Q34	6 bimetal sensors (NC contacts) for alarm and tripping (12 terminals)		3/125, 3/131, 3/139, 4/33, 5/65, 5/69, 5/126,
Q35	1 Pt1000 resistance thermometer (2 terminals)		3/125, 3/131, 3/139, 4/33, 5/65, 5/69, 5/122, 5/126, 6/95, 6/99, 6/108, 6/113
Q36	2 Pt1000 resistance thermometers (4 terminals)		3/125, 3/131, 3/139, 4/33, 5/65, 5/69, 5/122, 5/126, 6/95, 6/99, 6/108, 6/113
Q37	6 Pt1000 resistance thermometer (12 terminals)	Explosion-protected version	6/113

© Innomotics 2024

Order code	Special versions	Category	For further information, see page
Q60	3 Pt100 resistance thermometers (6 terminals)	Motor protection	3/125, 3/131, 3/139, 4/33, 5/65, 5/69, 5/122, 5/126, 6/99, 6/108, 6/113
Q61	6 Pt100 resistance thermometers (12 terminals)		3/125, 3/131, 3/139, 4/33, 5/65, 5/122, 6/99, 6/108, 6/113
Q62	1 Pt100 resistance thermometer (2 terminals)		3/125, 3/131, 3/139, 4/33, 5/65, 5/69, 5/122, 5/126, 6/113
Q63	3 Pt100 resistance thermometers (9 terminals)		3/125, 3/131, 3/139, 4/33, 5/65, 5/69, 5/122, 5/126, 6/99, 6/104, 6/108, 6/113
Q64	6 Pt100 resistance thermometers (18 terminals)		3/125, 3/131, 3/139, 4/33, 5/65, 5/69, 5/122, 5/126, 6/99, 6/104, 6/108, 6/113
Q72	2 Pt100 resistance thermometers in basic configuration for bearings (4 terminals)		3/125, 3/131, 3/139, 4/33, 5/65, 5/69, 5/122, 5/126, 6/99, 6/104, 6/108, 6/113
Q78	2 Pt100 resistance thermometers for bearings (6 terminals)		3/125, 3/131, 3/139, 4/33, 5/65, 5/69, 5/122, 5/126, 6/99, 6/104, 6/108, 6/113
Q79	2 Pt100 double resistance thermometers for bearings (12 terminals)		3/125, 3/131, 3/139, 4/33, 5/65, 5/69, 5/122, 5/126, 6/99, 6/104, 6/108, 6/113
Q80	Extension of the liability for defects period by 12 months to a total of 24 months (2 years) from delivery	Extension of the liability for defects	3/138, 4/40, 5/129, 6/106, 6/111, 6/117
Q81	Extension of the liability for defects period by 18 months to a total of 30 months (2.5 years) from delivery		4/40, 6/117
Q82	Extension of the liability for defects period by 24 months to a total of 36 months (3 years) from delivery		3/138, 4/40, 5/129, 6/106, 6/111, 6/117
Q83	Extension of the liability for defects period by 30 months to a total of 42 months (3.5 years) from delivery		4/40, 6/117
Q84	Extension of the liability for defects period by 36 months to a total of 48 months (4 years) from delivery		4/40, 6/117
Q85	Extension of the liability for defects period by 48 months to a total of 60 months (5 years) from delivery		4/40, 6/117
R09	Subsequently rotatable main terminal box	Motor connection and terminal boxes	4/33, 6/114
R10	Rotation of the terminal box through 90°, entry from DE		3/125, 3/131, 3/139, 4/33, 5/65, 5/69, 5/122, 5/126, 6/95, 6/99, 6/104, 6/108, 6/114
R11	Rotation of the terminal box through 90°, entry from NDE		3/125, 3/131, 3/139, 4/33, 5/65, 5/69, 5/122, 5/126, 6/95, 6/99, 6/104, 6/108, 6/114
R12	Rotation of the terminal box through 180°		3/125, 3/131, 3/139, 4/33, 5/65, 5/69, 5/122, 5/126, 6/95, 6/99, 6/104, 6/108, 6/114
R13	Terminal box in position 0°; connection from right		3/125, 5/65, 5/122,
R14	One EMC cable gland		3/131, 3/139, 4/33, 5/69, 5/126, 6/95, 6/99, 6/104, 6/108, 6/114
R15	One metal cable gland		3/125, 3/131, 3/139, 4/33, 5/65, 5/69, 5/122, 5/126, 6/95, 6/99, 6/104, 6/108, 6/114
R16	EMC cable gland, maximum configuration		3/131, 3/139, 4/34, 5/69, 5/126, 6/95, 6/99, 6/104, 6/108, 6/114
R17	Stud terminal for cable connection, accessories pack (3 items)		3/131, 3/139, 4/34, 5/126, 6/100, 6/114
R18	Metal cable gland, maximum configuration		3/125, 3/131, 3/139, 4/34, 5/65, 5/122, 6/95, 6/100, 6/104, 6/108, 6/114
R19	Saddle terminal for connection without cable lug, accessories pack		3/131, 3/139, 4/34, 5/126, 6/100, 6/104, 6/114
R20	3 cables protruding, 0.5 m long	Motor connection and terminal boxes	3/125, 3/132, 3/139, 5/65, 5/122,
R21	3 cables protruding, 1.5 m long		3/125, 3/132, 3/139, 4/34, 5/65,
R22	6 cables protruding, 0.5 m long		3/125, 3/132, 3/139, 5/65, 5/122,
R23	6 cables protruding, 1.5 m long	Motor connection and terminal boxes	3/126, 3/132, 3/139, 4/34, 5/65,
R24	6 cables protruding, 3 m long		3/126, 3/132, 3/139, 4/34, 5/65,
R30	Reduction piece for M cable gland in accordance with British Standard, mounted on both cable entries		3/126, 3/132,
R45	1 cable gland, Ex eb, for armored cable, line feeder cable	Explosion-protected version	6/95, 6/100, 6/104, 6/108,
R46	2 cable glands, Ex eb, for armored cable, line feeder cable		6/108,
R48	Main terminal box in Ex db IIC		6/108,
R49	Auxiliary terminal box in Ex db IIC		6/108,

© Innomotics 2024

Appendix

Index of order codes

Order code	Special versions	Category	For further information, see page
R50	Larger terminal box	Motor connection and terminal boxes	3/126, 3/132, 3/139, 4/34, 5/65, 5/69, 5/122, 5/126, 6/95, 6/100, 6/104, 6/108, 6/114
R51	Terminal box without cable entry opening		3/132, 3/140, 4/34, 5/69, 5/126,
R52	Drilled removable entry plate		3/132, 3/140, 4/34, 5/69, 5/126, 6/100, 6/104, 6/108, 6/114
R53	Undrilled removable entry plate		3/132, 3/140, 4/34, 5/69, 5/126, 6/104,
R54	Enlarged connection system for main terminal box	Explosion-protected version	6/108,
R60	Auxiliary terminal box, aluminum	Motor connection and terminal boxes	3/126,
R62	Cast-iron auxiliary terminal box (small)		3/132, 3/140, 4/34, 5/69, 5/126, 6/100, 6/104, 6/109, 6/114
R63	Cast-iron auxiliary terminal box (large)		3/140, 4/34, 6/100, 6/104, 6/109, 6/114
R65	Stainless steel auxiliary terminal box (large)		4/34, 6/114
R67	2 small cast-iron auxiliary terminal boxes		3/132, 3/140, 4/34, 5/69, 5/126, 6/100, 6/104, 6/109,
R68	2 big cast-iron auxiliary terminal boxes	Explosion-protected version	6/100, 6/104, 6/109,
R70	Motor connector Han-Drive 10e for 230 VΔ/400 VY	Motor connection and terminal boxes	3/126, 5/65, 5/122,
R71	Motor connector EMC Han-Drive 10e for 230 VΔ/400 VY		3/126, 5/65, 5/122,
R72	Small motor connector CQ12 with EMC		3/126,
R73	Small motor connector CQ12 without EMC		3/126,
R77	Version with reduced silicon amount according to VDMA 24364-C1/T70		3/126, 3/132, 4/34, 5/65, 5/69, 5/122,
S00	Unpainted (only cast-iron parts primed)	Colors and paint finish	3/127, 3/133, 3/140, 4/35, 5/66, 5/70, 5/122, 5/127, 6/96, 6/100, 6/105, 6/109, 6/114
S01	Unpainted, only primed		3/127, 3/133, 3/140, 4/35, 5/66, 5/70, 5/122, 5/127, 6/96, 6/100, 6/105, 6/109, 6/114
S02	Special paint finish C3		3/127, 3/133, 3/140, 4/35, 5/66, 5/70, 5/122, 5/127, 6/96, 6/100, 6/105, 6/109, 6/114
S03	Special paint finish sea air resistant C4		3/127, 3/133, 3/140, 4/35, 5/66, 5/70, 5/122, 5/127, 6/96, 6/100, 6/105, 6/109, 6/114
S04	Special paint finish for use offshore C5		3/133, 3/140, 4/35, 5/70, 5/127, 6/100, 6/105, 6/109, 6/114
S05	Internal coating		3/127, 3/133, 3/140, 4/35, 5/66, 5/70, 5/122, 5/127, 6/100, 6/105, 6/109, 6/114
S06	Top coat polyurethane		3/127, 3/133, 3/140, 4/35, 6/96, 6/100, 6/105, 6/109, 6/115
S08	C5mid Special paint system with durability "medium"		3/133, 3/140, 4/35, 5/70, 5/127, 6/100, 6/105, 6/109, 6/115
S09	CX Special paint system for offshore with durability "high"		3/133, 3/140, 4/35, 5/70, 5/127, 6/100, 6/105, 6/109, 6/115
Y37	Motor design VSD, higher speed up to .... rpm, vibration level .. acc. IEC60034-14, with or w/o routine test	Bearings and lubrication	3/129, 3/136, 4/39, 5/67, 5/71, 5/124, 5/128, 6/116
Y50 • und gew. Leistung, KT .. °C bzw. AH .... m über NN	Temperature class 155 (F), utilized acc. to 130 (B), with higher coolant temperature and/or installation altitude	Windings and insulation	3/126, 3/133, 3/142, 4/35, 6/96, 6/100, 6/109, 6/114
Y52 • und gew. Leistung, KT .. °C bzw. AH .... m über NN	Temperature class 155 (F), utilized according to 155 (F), other requirements		3/126, 3/133, 3/142, 4/35,
Y53 • und Anstrich RAL	Paint finish in other standard RAL colors: RAL 1002, 1013, 1015, 1019, 2003, 2004, 3000, 3007, 5002, 5007, 5009, 5010, 5012, 5015, 5017, 5018, 5019, 6011, 6019, 6021, 7000, 7001, 7004, 7011, 7016, 7022, 7031, 7032, 7033, 7035, 9001, 9002, 9005 (see Catalog Section 1 "Introduction")	Colors and paint finish	3/127, 3/133, 3/141, 4/35, 5/66, 5/70, 5/123, 5/127, 6/96, 6/100, 6/105, 6/109, 6/115
Y56 • und Anstrich RAL	Paint finish in special RAL colors: For RAL colors, see "Special paint finish in special RAL colors" (see Catalog Section 1 "Introduction")		3/127, 3/133, 3/141, 4/35, 5/66, 5/70, 5/123, 5/127, 6/96, 6/100, 6/105, 6/109, 6/115
Y58 • und Bestellerangabe	Non-standard cylindrical shaft extension, DE	Shaft and rotor	3/129, 3/137, 3/143, 4/39, 5/67, 5/72, 5/124, 5/129, 6/97, 6/102, 6/106, 6/111, 6/116
Y59 • und Bestellerangabe	Non-standard cylindrical shaft extension, NDE		3/129, 3/137, 3/143, 4/40, 5/67, 5/72, 5/124, 5/129, 6/97, 6/102, 6/106, 6/111, 6/116
Y60 • und Bestellerangabe	Special shaft steel		3/137, 3/143, 4/40, 5/72, 5/129, 6/116
Y61 • und Bestellerangabe	Non-standard threaded through hole (metric, NPT or G thread)	Motor connection and terminal boxes	3/132, 3/140, 4/34, 5/69, 5/126, 6/109, 6/114

© Innomotics 2024

Order code	Special versions	Category	For further information, see page
Y66 • und Anstrich	Non-standard colors Colors see "Paint finish in non-standard colors (see Catalog Section 1 "Introduction")	Colors and paint finish	3/127, 3/133, 3/141, 4/35, 5/66, 5/70, 5/123, 5/127, 6/96, 6/101, 6/105, 6/109, 6/115
Y68 • und Umrichtertyp	Operating data such as the B40 order code with alternative SINAMICS converter on the rating plate _ G120 with PM230 _ G120 with PM240 _ G120C _ G120P with PM230 _ G120P with PM240P-2 _ G120P with PM330 _ G130, G150, G180 _ S120 (BLM/SLM) _ V20 Operating data such as the B41 order code with alternative SINAMICS converter on the rating plate _ S120 (ALM)	Explosion-protected version	6/95, 6/99, 6/113
Y70 • und Bestellerangabe	Mounting of a special type of rotary pulse encoder	Special technology	3/134, 4/37, 5/71, 5/127, 6/115
Y74 • und gew. Drehzahl .... min^{-1}	Mounting of rotary pulse encoder HOG 10 DN 1024 I + FSL, (integrated centrifugal switch, speed ... rpm), terminal box moisture protection		3/134, 3/142, 4/37,
Y75 • und gew. Leistung, KT .. °C bzw. AH .... m über NN	Temperature class 180 (H), utilized according to 155 (F)	Windings and insulation	3/126, 3/133, 3/142, 4/35,
Y76 • und gew. Drehzahl .... min^{-1}	Mounting of rotary pulse encoder HOG 10 DN 1024 I + FSL, (integrated centrifugal switch, speed ... rpm), terminal box dust protection	Special technology	3/134, 3/142, 4/37,
Y79 • und gew. Drehzahl (max 3) .... min^{-1}	Mounting of rotary pulse encoder HOG 10 DN 1024 I + ESL 93, (integrated electronic speed switch, speed ... rpm), terminal box dust protection		3/135, 3/142, 4/37,
Y80 • und Bestellerangabe	Additional rating plate with deviating rating plate data	Rating plate and additional rating plates	3/130, 3/137, 3/143, 4/40, 6/97, 6/102, 6/107, 6/111, 6/116
Y81 • und Bestellerangabe	Separately driven fan with non-standard voltage and/or frequency	Heating and ventilation	3/137, 3/143, 4/40, 5/129, 6/111, 6/116
Y82 • und Bestellerangabe	Additional rating plate with customer specifications	Rating plate and additional rating plates	3/130, 3/137, 3/143, 4/40, 5/68, 5/72, 5/124, 5/129, 6/97, 6/102, 6/106, 6/111, 6/116
Y84 • und Bestellerangabe	Additional information on rating plate and on package label (max. 20 characters)		3/130, 3/137, 3/143, 4/40, 5/68, 5/72, 5/125, 5/129, 6/98, 6/102, 6/106, 6/111, 6/116
Y85 • und Bestellerangabe	Adhesive label, supplied loose (printed with: Article No., Serial No.; 2 lines of text)		3/130, 3/137, 3/143, 4/40, 5/68, 5/72, 5/125, 5/129, 6/117

© Innomotics 2024

Appendix

Explanation of the raw material/metal surcharges[1)]

Surcharge calculation

To compensate for variations in the price of the raw materials silver, copper, aluminum, lead, gold, dysprosium[2)] and/or neodym[2)], surcharges are calculated on a daily basis using the so-called metal factor for products containing these raw materials. A surcharge for the respective raw material is calculated as a supplement to the price of a product if the basic official price of the raw material in question is exceeded.

The surcharges are calculated in accordance with the following criteria:

- Basic official price of the raw material
  Basic official price from the day prior to receipt of the order or prior to release order (daily price) for[3)]
  - Silver (sales price, processed)
  - Gold (sales price, processed)

  and for[4)]
  - Copper (lower DEL notation + 1 %)
  - Aluminum (aluminum in cables)
  - Lead (lead in cables)
- Metal factor of the products
  Certain products are displayed with a metal factor. The metal factor determines the official price (for those raw materials concerned) as of which the metal surcharges are applied and the calculation method used (weight or percentage method). An exact explanation is given below.

Structure of the metal factor

The metal factor consists of several digits; the first digit indicates whether the percentage method of calculation refers to the list price or a possible discounted price (customer net price) (L = list price / N = customer net price).

The remaining digits indicate the method of calculation used for the respective raw material. If no surcharge is added for a raw material, a "-" is used.

1st digit	List or customer net price using the percentage method
2nd digit	for silver (AG)
3rd digit	for copper (CU)
4th digit	for aluminum (AL)
5th digit	for lead (PB)
6th digit	for gold (AU)
7th digit	for dysprosium (Dy)[2)]
8th digit	for neodym (Nd)[2)]

Weight method

The weight method uses the basic official price, the daily price and the raw material weight. In order to calculate the surcharge, the basic official price must be subtracted from the daily price. The difference is then multiplied by the raw material weight.

The basic official price can be found in the table below using the number (1 to 9) of the respective digit of the metal factor. The raw material weight can be found in the respective product descriptions.

Percentage method

Use of the percentage method is indicated by the letters A-Z at the respective digit of the metal factor.

The surcharge is increased - dependent on the deviation of the daily price compared with the basic official price - using the percentage method in "steps" and consequently offers surcharges that remain constant within the framework of this "step range". A higher percentage rate is charged for each new step. The respective percentage level can be found in the table below.

Metal factor examples

L E A - - - - -

- Basis for % surcharge: List price
- Silver Basis 150€, Step 50 €, 0.5 %
- Copper Basis 150 €, Step 50 €, 0.1 %
- No surcharge for aluminum
- No surcharge for lead
- No surcharge for gold
- No surcharge for dysprosium
- No surcharge for neodym

N - A 6 - - - -

- Basis for % surcharge: Customer net price
- No surcharge for silver
- Copper Basis 150 €, Step 50 €, 0.1 %
- Aluminum acc. to weight, basic offic. price 225 €
- No surcharge for lead
- No surcharge for gold
- No surcharge for dysprosium
- No surcharge for neodym

- - 3 - - - - -

- No basis necessary
- No surcharge for silver
- Copper acc. to weight, basic official price 150 €
- No surcharge for aluminum
- No surcharge for lead
- No surcharge for gold
- No surcharge for dysprosium
- No surcharge for neodym

1) Refer to the separate explanation on the next page regarding the raw materials dysprosium and neodym (= rare earths).
2) For a different method of calculation, refer to the separate explanation for these raw materials on the next page.
3) Source: Umicore, Hanau (www.metalsmanagement.umicore.com).
4) Source: Schutzvereinigung DEL-Notiz e.V. (www.del-notiz.org).

© Innomotics 2024

Explanation of the raw material/metal surcharges for dysprosium and neodym (rare earths)

Surcharge calculation

To compensate for variations in the price of the raw materials silver[1], copper[1], aluminum[1], lead[1], gold[1], dysprosium and/or neodym, surcharges are calculated on a daily basis using the so-called metal factor for products containing these raw materials. The surcharge for dysprosium and neodym is calculated as a supplement to the price of a product if the basic official price of the raw material in question is exceeded.

The surcharge is calculated in accordance with the following criteria:

- Basic official price of the raw material[2]
  Three-month basic average price (see below) in the period before the quarter in which the order was received or the release order took place (= average official price) for
  - dysprosium (Dy metal, 99 % min. FOB China; USD/kg)
  - neodym (Nd metal, 99 % min. FOB China; USD/kg)
- Metal factor of the products
  Certain products are displayed with a metal factor. The metal factor indicates (for those raw materials concerned) the basic official price as of which the surcharges for dysprosium and neodym are calculated using the weight method. An exact explanation of the metal factor is given below.

Three-month average price

The prices of rare earths vary according to the foreign currency, and there is no freely accessible stock exchange listing. This makes it more difficult for all parties involved to monitor changes in price. In order to avoid continuous adjustment of the surcharges, but to still ensure fair, transparent pricing, an average price is calculated over a three-month period using the average monthly foreign exchange rate from USD to EUR (source: European Central Bank). Since not all facts are immediately available at the start of each month, a one-month buffer is allowed before the new average price applies.

Examples of calculation of the average official price:

Period for calculation of the average price:	Period during which the order/release order is effected and the average price applies:
Sep 2012 - Nov 2012	Q1 in 2013 (Jan - Mar)
Dec 2012 - Feb 2013	Q2 in 2013 (Apr - Jun)
Mar 2013 - May 2013	Q3 in 2013 (Jul - Sep)
Jun 2013 - Aug 2013	Q4 in 2013 (Oct - Dec)

Structure of the metal factor

The metal factor consists of several digits; the first digit is not relevant to the calculation of dysprosium and neodym.

The remaining digits indicate the method of calculation used for the respective raw material. If no surcharge is added for a raw material, a "-" is used.

1st digit	List or customer net price using the percentage method
2nd digit	for silver (AG)[1]
3rd digit	for copper (CU)[1]
4th digit	for aluminum (AL)[1]
5th digit	for lead (PB)[1]
6th digit	for gold (AU)[1]
7th digit	for dysprosium (Dy)
8th digit	for neodym (Nd)

Weight method

The weight method uses the basic official price, the average price and the raw material weight. In order to calculate the surcharge, the basic official price must be subtracted from the average price. The difference is then multiplied by the raw material weight.

The basic official price can be found in the table below using the number (1 to 9) of the respective digit of the metal factor. Your Sales contact can inform you of the raw material weight.

Metal factor examples

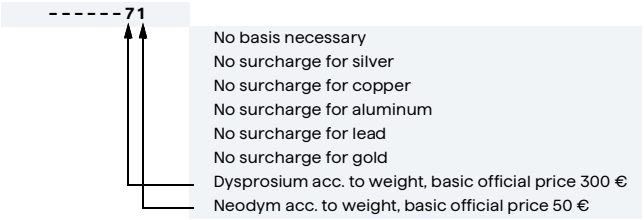

[1] For a different method of calculation, refer to the separate explanation for these raw materials on the previous page.

[2] Source: Asian Metal Ltd (www.asianmetal.com)

© Innomotics 2024

Appendix

Values of the metal factor

Percentage method	**Basic official price in €**	**Step range in €**	**% surcharge 1st step** Price in €	**% surcharge 2nd step** Price in €	**% surcharge 3rd step** Price in €	**% surcharge 4th step** Price in €	**% surcharge per addition-al step**
			150.01 - 200.00	200.01 - 250.00	250.01 - 300.00	300.01 - 350.00	
A	150	50	0.1	0.2	0.3	0.4	0.1
B	150	50	0.2	0.4	0.6	0.8	0.2
C	150	50	0.3	0.6	0.9	1.2	0.3
D	150	50	0.4	0.8	1.2	1.6	0.4
E	150	50	0.5	1.0	1.5	2.0	0.5
F	150	50	0.6	1.2	1.8	2.4	0.6
G	150	50	1.0	2.0	3.0	4.0	1.0
H	150	50	1.2	2.4	3.6	4.8	1.2
I	150	50	1.6	3.2	4.8	6.4	1.6
J	150	50	1.8	3.6	5.4	7.2	1.8
			175.01 - 225.00	225.01 - 275.00	275.01 - 325.00	325.01 - 375.00	
O	175	50	0.1	0.2	0.3	0.4	0.1
P	175	50	0.2	0.4	0.6	0.8	0.2
R	175	50	0.5	1.0	1.5	2.0	0.5
			225.01 - 275.00	275.01 - 325.00	325.01 - 375.00	375.01 - 425.00	
S	225	50	0.2	0.4	0.6	0.8	0.2
U	225	50	1.0	2.0	3.0	4.0	1.0
V	225	50	1.0	1.5	2.0	3.0	1.0
W	225	50	1.2	2.5	3.5	4.5	1.0
			150.01 - 175.00	175.01 - 200.00	200.01 - 225.00	225.01 - 250.00	
Y	150	25	0.3	0.6	0.9	1.2	0.3
			400.01 - 425.00	425.01 - 450.00	450.01 - 475.00	475.01 - 500.00	
Z	400	25	0.1	0.2	0.3	0.4	0.1
	Price basis (1st digit)						
L	Calculation based on the list price						
N	Calculation based on the customer net price (discounted list price)						
Weight method	**Basic official price in €**						
1	50	Calculation based on raw material weight					
2	100						
3	150						
4	175						
5	200						
6	225						
7	300						
8	400						
9	555						
Miscellaneous							
-	No metal surcharge						

© Innomotics 2024

© Innomotics 2024

INNOMOTICS

Published by
Innomotics GmbH

Innomotics GmbH
Vogelweiherstr. 1–15
90441 Nuremberg
Germany

innomotics.com/low-voltage-motors

PDF (Article No. E86060-K5581-A111-B9-7600)
V7.MKKATA.LVM.110
KG 1024 752 En
Produced in Germany
© Innomotics 2024

Subject to changes and errors. The information given in this document only contains general descriptions and/or performance features which may not always specifically reflect those described, or which may undergo modification in the course of further development of the products. The requested performance features are binding only when they are expressly agreed upon in the concluded contract.

All product designations may be trademarks or product names of Innomotics GmbH or other companies whose use by third parties for their own purposes could violate the rights of the owners.

Security information

Innomotics provides products and solutions with industrial security functions that support the secure operation of plants, systems, machines and networks. In order to protect plants, systems, machines and networks against cyber threats, it is necessary to implement – and continuously maintain – a holistic, state-of-the-art industrial security concept. Innomotics' products and solutions constitute one element of such a concept. Customers are responsible for preventing unauthorized access to their plants, systems, machines and networks. Such systems, machines and components should only be connected to an enterprise network or the internet if and to the extent such a connection is necessary and only when appropriate security measures (e.g. firewalls and/or network segmentation) are in place. For additional information on industrial security measures that may be implemented, please visit

www.innomotics.com/cybersecurity

Innomotics' products and solutions undergo continuous development to make them more secure. Innomotics strongly recommends that product updates are applied as soon as they are available and that the latest product versions are used. Use of product versions that are no longer supported, and failure to apply the latest updates may increase customer's exposure to cyber threats.

Get more information